HEATER & AIR CONDITIONER

SECTION HA

CONTENTS

AUTO

MANUAL

CONTENTS (Cont'd)

Supplemental Restraint System (SRS) "AIR BAG" and "SEAT BELT PRE-TENSIONER"

NCHA0181

The Supplemental Restraint System such as "AIR BAG" and "SEAT BELT PRE-TENSIONER" used along with a seat belt, helps to reduce the risk or severity of injury to the driver and front passenger for certain types of collision. The SRS system composition which is available to INFINITI G20 is as follows:

- For a frontal collision
  The Supplemental Restraint System consists of driver air bag module (located in the center of the steering wheel), front passenger air bag module (located on the instrument panel on passenger side), seat belt pre-tensioners, a diagnosis sensor unit, warning lamp, wiring harness and spiral cable.
- For a side collision
  The Supplemental Restraint System consists of side air bag module (located in the outer side of front seat), satellite sensor, diagnosis sensor unit (one of components of air bags for a frontal collision), wiring harness, warning lamp (one of components of air bags for a frontal collision).

Information necessary to service the system safely is included in the **RS** section of this Service Manual.

WARNING:

- **To avoid rendering the SRS inoperative, which could increase the risk of personal injury or death in the event of a collision which would result in air bag inflation, all maintenance must be performed by an authorized INFINITI dealer.**
- **Improper maintenance, including incorrect removal and installation of the SRS, can lead to personal injury caused by unintentional activation of the system. For removal of Spiral Cable and Air Bag Module, see the RS section.**
- **Do not use electrical test equipment on any circuit related to the SRS unless instructed to in this Service Manual. Spiral cable and wiring harnesses (except "SEAT BELT PRE-TENSIONER") covered with yellow insulation tape either just before the harness connectors or for the complete harness are related to the SRS.**

Precautions for Working with HFC-134a (R-134a)

NCHA0002

WARNING:

- **CFC-12 (R-12) refrigerant and HFC-134a (R-134a) refrigerant are not compatible. If the refrigerants are mixed and compressor failure is likely to occur, refer to "CONTAMINATED REFRIGERANT" below. To determine the purity of HFC-134a (R-134a) in the vehicle and recovery tank, use Refrigerant Recovery/Recycling Recharging equipment (ACR4) (J-39500-INF) and Refrigerant Identifier.**
- **Use only specified lubricant for the HFC-134a (R-134a) A/C system and HFC-134a (R-134a) components. If lubricant other than that specified is used, compressor failure is likely to occur.**
- **The specified HFC-134a (R-134a) lubricant rapidly absorbs moisture from the atmosphere. The following handling precautions must be observed:**

a) When removing refrigerant components from a vehicle, immediately cap (seal) the component to minimize the entry of moisture from the atmosphere.

b) When installing refrigerant components to a vehicle, do not remove the caps (unseal) until just before connecting the components. Connect all refrigerant loop components as quickly as possible to minimize the entry of moisture into system.

c) Only use the specified lubricant from a sealed container. Immediately reseal containers of lubricant. Without proper sealing, lubricant will become moisture saturated and should not be used.

d) Avoid breathing A/C refrigerant and lubricant vapor or mist. Exposure may irritate eyes, nose and throat. Remove R-134a from the A/C system, using certified service equipment meeting requirements of SAE J2210 (R-134a recycling equipment), or J2209 (R-134a recovery equipment). If accidental system discharge occurs, ventilate work area before resuming service. Additional health and safety information may be obtained from refrigerant and lubricant manufacturers.

e) Do not allow lubricant (Nissan A/C System Oil Type S) to come in contact with styrofoam parts. Damage may result.

CONTAMINATED REFRIGERANT

NCHA0002S01

If a refrigerant other than pure R-134a is identified in a vehicle, your options are:

- Explain to the customer that environmental regulations prohibit the release of contaminated refrigerant into the atmosphere.

- Explain that recovery of the contaminated refrigerant could damage your service equipment and refrigerant supply.
- Suggest the customer return the vehicle to the location of previous service where the contamination may have occurred.
- If you choose to perform the repair, recover the refrigerant using only **dedicated equipment and containers. Do not recover contaminated refrigerant into your existing service equipment.** If your facility does not have dedicated recovery equipment, you may contact a local refrigerant product retailer for available service. This refrigerant must be disposed of in accordance with all federal and local regulations. In addition, replacement of all refrigerant system components on the vehicle is recommended.
- If the vehicle is within the warranty period, the air conditioner warranty is void. Please contact Nissan Customer Affairs for further assistance.

General Refrigerant Precautions

NCHA0003

WARNING:

- **Do not release refrigerant into the air. Use approved recovery/recycling equipment to capture the refrigerant every time an air conditioning system is discharged.**
- **Always wear eye and hand protection (goggles and gloves) when working with any refrigerant or air conditioning system.**
- **Do not store or heat refrigerant containers above 52°C (125°F).**
- **Do not heat a refrigerant container with an open flame; if container warming is required, place the bottom of the container in a warm pail of water.**
- **Do not intentionally drop, puncture, or incinerate refrigerant containers.**
- **Keep refrigerant away from open flames: poisonous gas will be produced if refrigerant burns.**
- **Refrigerant will displace oxygen, therefore be certain to work in well ventilated areas to prevent suffocation.**
- **Do not pressure test or leak test HFC-134a (R-134a) service equipment and/or vehicle air conditioning systems with compressed air during repair. Some mixtures of air and R-134a have been shown to be combustible at elevated pressures. These mixtures, if ignited, may cause injury or property damage. Additional health and safety information may be obtained from refrigerant manufacturers.**

Precautions for Leak Detection Dye

NCHA0200

- The A/C system contains a fluorescent leak detection dye used for locating refrigerant leaks. An ultraviolet (UV) lamp is required to illuminate the dye when inspecting for leaks.
- Always wear fluorescence enhancing UV safety glasses to protect your eyes and enhance the visibility of the fluorescent dye.
- The fluorescent dye leak detector is not a replacement for an electronic refrigerant leak detector. The fluorescent dye leak detector should be used in conjunction with an electronic refrigerant leak detector (J-41995) to pin-point refrigerant leaks.
- For your safety and your Customer's satisfaction, read and follow all manufacture's operating instructions and precautions prior to performing the work.
- A compressor shaft seal should not be repaired because of dye seepage. The compressor shaft seal should only be repaired after confirming the leak with an electronic refrigerant leak detector (J-41995).
- Always remove any dye from the leak area after repairs are complete to avoid a misdiagnosis during a future service.
- Do not allow dye to come into contact with painted body panels or interior components. If dye is spilled, clean immediately with the approved dye cleaner. Fluorescent dye left on a surface for an extended period of time cannot be removed.
- Do not spray the fluorescent dye cleaning agent on hot surfaces (engine exhaust manifold, etc.).
- Do not use more than one refrigerant dye bottle (1/4 ounce /7.4 cc) per A/C system.
- Leak detection dyes for R-134a and R12 A/C systems are different. Do not use R-134a leak detection dye in R-12 A/C system or R-12 leak detection dye in R-134a A/C systems or A/C system damage may result.
- The fluorescent properties of the dye will remain for over three (3) years unless a compressor failure occurs.

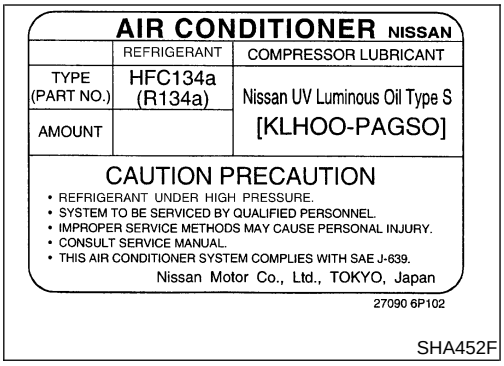

Identification

NCHA0201

IDENTIFICATION LABEL FOR VEHICLE

NCHA0201S01

Vehicles with factory installed fluorescent dye have this identification label on the under side of hood.

NOTE:

Vehicles with factory installed fluorescent dye have a green label.

Vehicles without factory installed fluorescent dye have a blue label.

Precautions for Refrigerant Connection

NCHA0004

A new type refrigerant connection has been introduced to all refrigerant lines except the following location.

- Expansion valve to cooling unit

FEATURES OF NEW TYPE REFRIGERANT CONNECTION

NCHA0004S01

- The O-ring has been relocated. It has also been provided with a groove for proper installation. This eliminates the chance of the O-ring being caught in, or damaged by, the mating part. The sealing direction of the O-ring is now set vertically in relation to the contacting surface of the mating part to improve sealing characteristics.
- The reaction force of the O-ring will not occur in the direction that causes the joint to pull out, thereby facilitating piping connections.

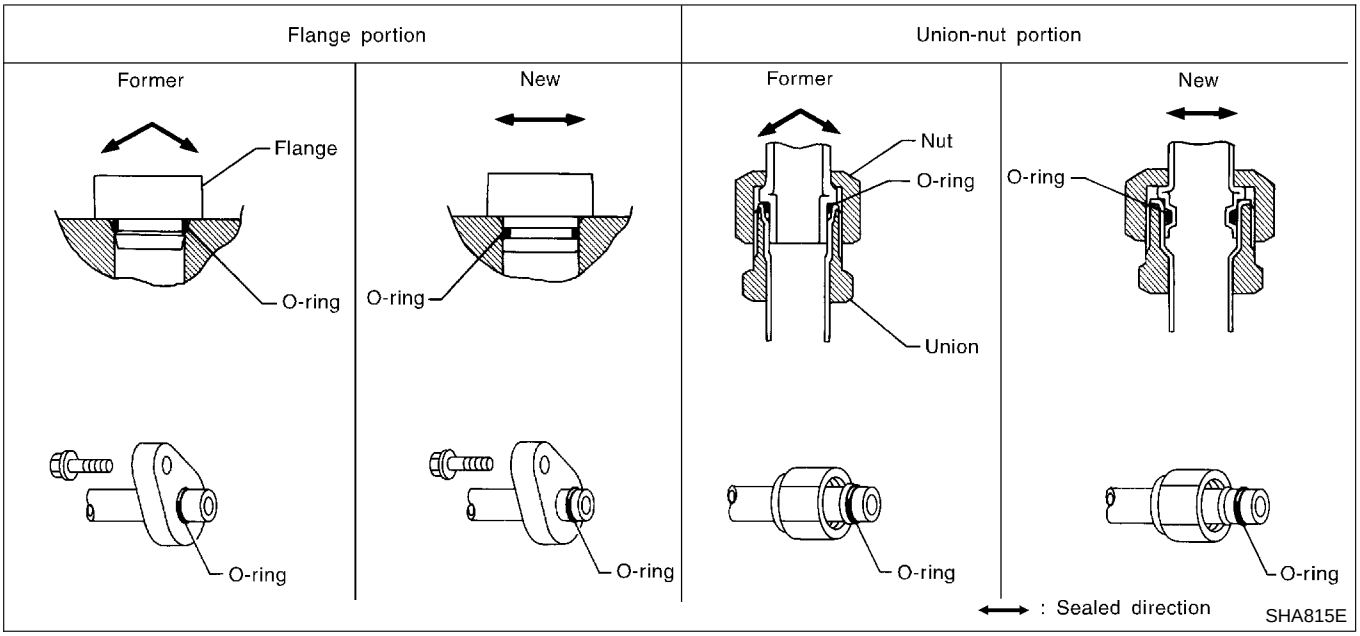

O-RING AND REFRIGERANT CONNECTION

NCHA0004S02

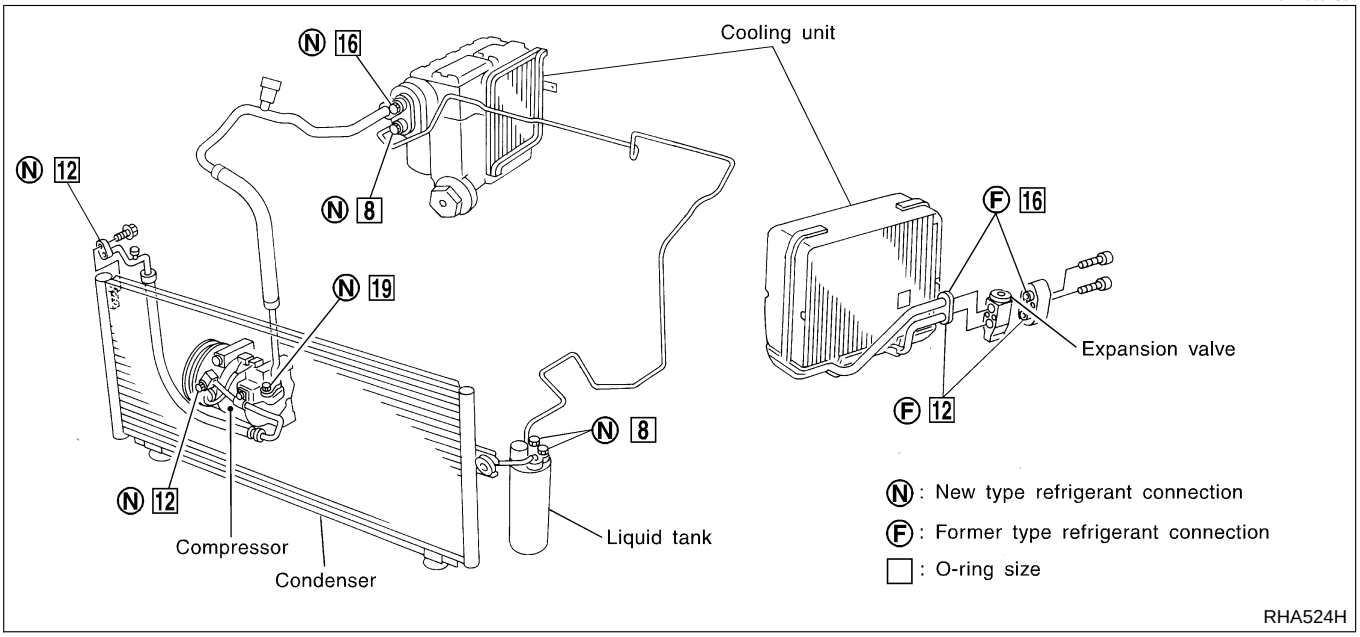

CAUTION:

The new and former refrigerant connections in some systems use different O-ring configurations. Do not confuse O-rings since they are not interchangeable. If a wrong O-ring is installed, refrigerant will leak at, or around, the connection.

O-Ring Part Numbers and Specifications

NCHA0004S0201

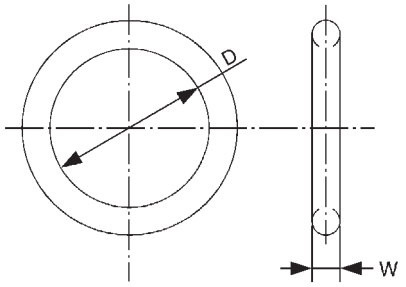

SHA814E

Connection type	O-ring size	Part number	D mm (in)	W mm (in)
New	8	92471 N8210	6.8 (0.268)	1.85 (0.0728)
New	12	92472 N8210	10.9 (0.429)	2.43 (0.0957)
Former		92475 71L00	11.0 (0.433)	2.40 (0.0945)
New	16	92473 N8210	13.6 (0.535)	2.43 (0.0957)
Former		92475 72L00	14.3 (0.563)	2.30 (0.0906)
New	19	92474 N8210	16.5 (0.650)	2.43 (0.0957)

WARNING:

Make sure all refrigerant is discharged into the recycling equipment and the pressure in the system is less than atmospheric pressure. Then gradually loosen the discharge side hose fitting and remove it.

CAUTION:

When replacing or cleaning refrigerant cycle components, observe the following.

- **When the compressor is removed, store it in the same position as it is when mounted on the car. Failure to do so will cause lubricant to enter the low pressure chamber.**
- **When connecting tubes, always use a torque wrench and a back-up wrench.**
- **After disconnecting tubes, immediately plug all openings to prevent entry of dirt and moisture.**
- **When installing an air conditioner in the vehicle, connect the pipes as the final stage of the operation. Do not remove the seal caps of pipes and other components until just before required for connection.**
- **Allow components stored in cool areas to warm to working area temperature before removing seal caps. This prevents condensation from forming inside A/C components.**
- **Thoroughly remove moisture from the refrigeration system before charging the refrigerant.**
- **Always replace used O-rings.**

- **When connecting tube, apply lubricant to circle of the O-rings shown in illustration. Be careful not to apply lubricant to threaded portion.**
  Lubricant name: Nissan A/C System Oil Type R
  Part number: KLH00-PAGR0
- **O-ring must be closely attached to dented portion of tube.**
- **When replacing the O-ring, be careful not to damage O-ring and tube.**
- **Connect tube until you hear it click, then tighten the nut or bolt by hand until snug. Make sure that the O-ring is installed to tube correctly.**
- **After connecting line, conduct leak test and make sure that there is no leakage from connections. When the gas leaking point is found, disconnect that line and replace the O-ring. Then tighten connections of seal seat to the specified torque.**

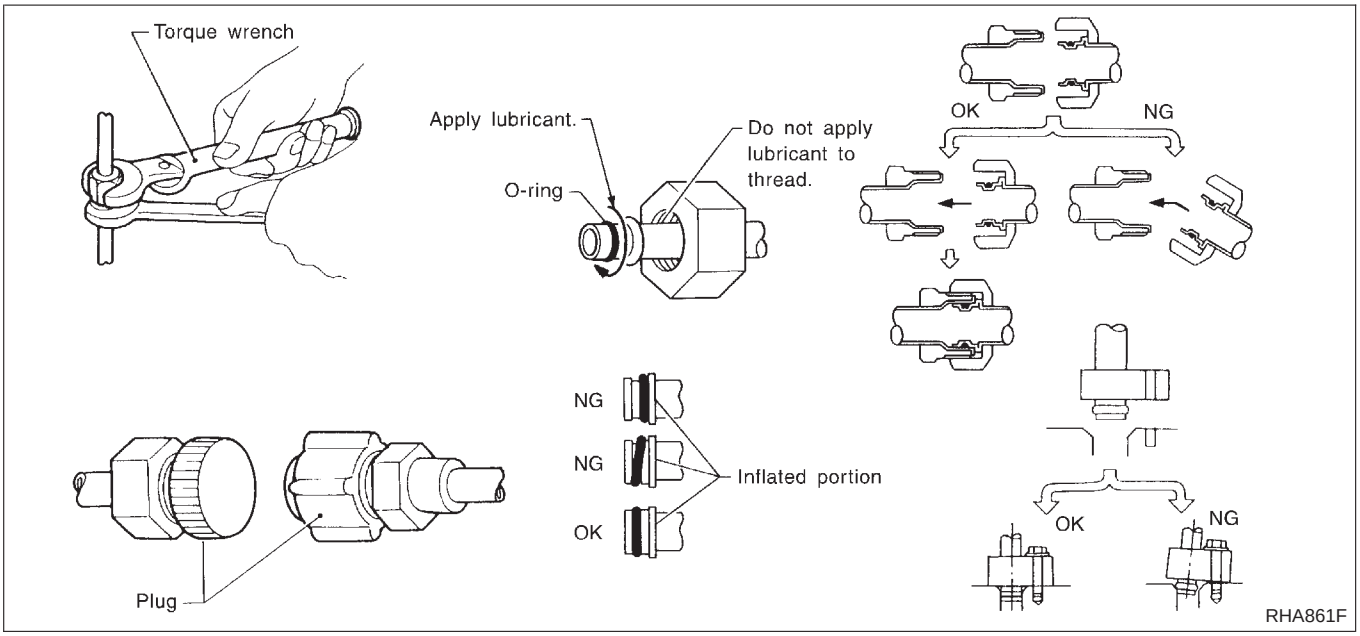

Precautions for Servicing Compressor

NCHA0005

- **Plug all openings to prevent moisture and foreign matter from entering.**
- **When the compressor is removed, store it in the same position as it is when mounted on the car.**
- **When replacing or repairing compressor, follow "Maintenance of Lubricant Quantity in Compressor" exactly. Refer to HA-107.**
- **Keep friction surfaces between clutch and pulley clean. If the surface is contaminated, with lubricant, wipe it off by using a clean waste cloth moistened with thinner.**
- **After compressor service operation, turn the compressor shaft by hand more than five turns in both directions. This will equally distribute lubricant inside the compressor. After the compressor is installed, let the engine idle and operate the compressor for one hour.**
- **After replacing the compressor magnet clutch, apply voltage to the new one and check for normal operation.**

Precautions for Service Equipment

NCHA0006

RECOVERY/RECYCLING EQUIPMENT

NCHA0006S01

Be certain to follow the manufacturers instructions for machine operation and machine maintenance. Never introduce any refrigerant other than that specified into the machine.

ELECTRONIC LEAK DETECTOR

NCHA0006S02

Be certain to follow the manufacturer's instructions for tester operation and tester maintenance.

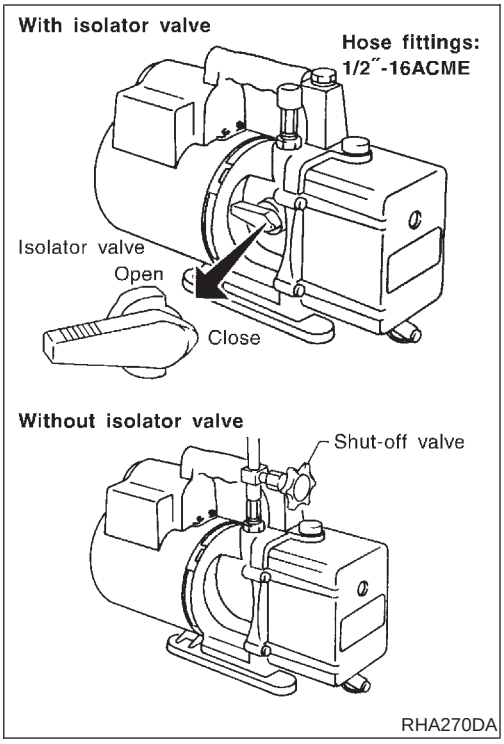

VACUUM PUMP

NCHA0006S03

The lubricant contained inside the vacuum pump is not compatible with the specified lubricant for HFC-134a (R-134a) A/C systems. The vent side of the vacuum pump is exposed to atmospheric pressure. So the vacuum pump lubricant may migrate out of the pump into the service hose. This is possible when the pump is switched off after evacuation (vacuuming) and hose is connected to it.

To prevent this migration, use a manual valve placed near the hose-to-pump connection, as follows.

- Usually vacuum pumps have a manual isolator valve as part of the pump. Close this valve to isolate the service hose from the pump.
- For pumps without an isolator, use a hose equipped with a manual shut-off valve near the pump end. Close the valve to isolate the hose from the pump.
- If the hose has an automatic shut off valve, disconnect the hose from the pump. As long as the hose is connected, the valve is open and lubricating oil may migrate.

Some one-way valves open when vacuum is applied and close under a no vacuum condition. Such valves may restrict the pump's ability to pull a deep vacuum and are not recommended.

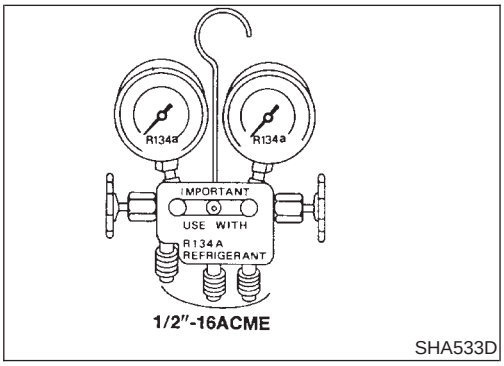

MANIFOLD GAUGE SET

NCHA0006S04

Be certain that the gauge face indicates R-134a or 134a. Be sure the gauge set has 1/2″-16 ACME threaded connections for service hoses. Confirm the set has been used only with refrigerant HFC-134a (R-134a) and specified lubricants.

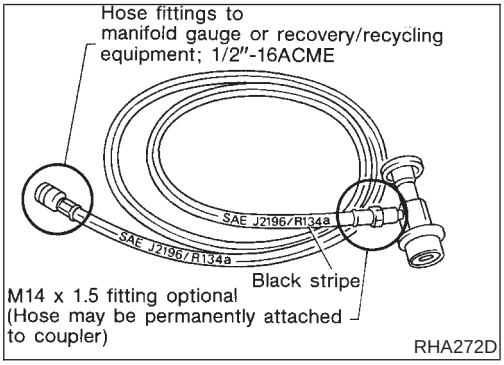

SERVICE HOSES

NCHA0006S05

Be certain that the service hoses display the markings described (colored hose with black stripe). All hoses must include positive shut off devices (either manual or automatic) near the end of the hoses opposite the manifold gauge.

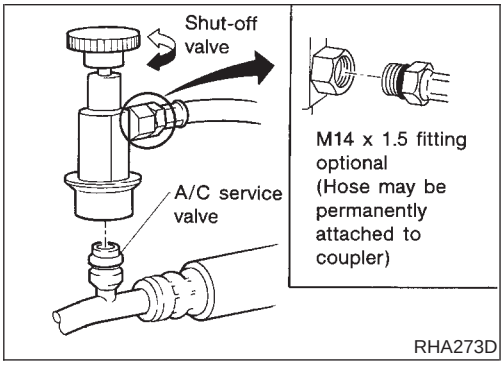

SERVICE COUPLERS

NCHA0006S06

Never attempt to connect HFC-134a (R-134a) service couplers to an CFC-12 (R-12) A/C system. The HFC-134a (R-134a) couplers will not properly connect to the CFC-12 (R-12) system. However, if an improper connection is attempted, discharging and contamination may occur.

Shut-off valve rotation	A/C service valve
Clockwise	Open
Counterclockwise	Close

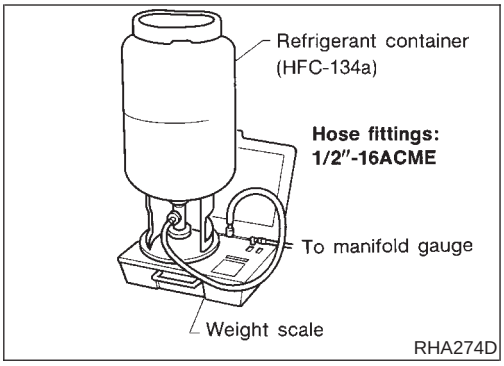

REFRIGERANT WEIGHT SCALE

NCHA0006S07

Verify that no refrigerant other than HFC-134a (R-134a) and specified lubricants have been used with the scale. If the scale controls refrigerant flow electronically, the hose fitting must be 1/2″-16 ACME.

CALIBRATING ACR4 WEIGHT SCALE

NCHA0006S09

Calibrate the scale every three months.
To calibrate the weight scale on the ACR4 (J-39500-INF):

1. Press **Shift/Reset** and **Enter** at the same time.
2. Press **8787**. "**A1**" will be displayed.
3. Remove all weight from the scale.
4. Press **0**, then press **Enter**. "**0.00**" will be displayed and change to "**A2**".
5. Place a known weight (dumbbell or similar weight), between 4.5 and 36.3 kg (10 and 80 lb) on the center of the weight scale.
6. Enter the known weight using four digits. (Example 10 lb = 10.00, 10.5 lb = 10.50)
7. Press **Enter** — the display returns to the vacuum mode.
8. Press **Shift/Reset** and **Enter** at the same time.
9. Press **6** — the known weight on the scale is displayed.
10. Remove the known weight from the scale. "**0.00**" will be displayed.
11. Press **Shift/Reset** to return the ACR4 to the program mode.

CHARGING CYLINDER

NCHA0006S08

Using a charging cylinder is not recommended. Refrigerant may be vented into air from cylinder's top valve when filling the cylinder with refrigerant. Also, the accuracy of the cylinder is generally less than that of an electronic scale or of quality recycle/recharge equipment.

Wiring Diagrams and Trouble Diagnosis

NCHA0007

When you read wiring diagrams, refer to the following:

- GI-11, "HOW TO READ WIRING DIAGRAMS"
- EL-14, "Wiring Diagram — POWER —"

When you perform trouble diagnosis, refer to the following:

- GI-34, "HOW TO FOLLOW TEST GROUPS IN TROUBLE DIAGNOSES"
- GI-24, "HOW TO PERFORM EFFICIENT DIAGNOSIS FOR AN ELECTRICAL INCIDENT"

Special Service Tools

NCHA0008

The actual shapes of Kent-Moore tools may differ from those of special service tools illustrated here.

Tool number (Kent-Moore No.) Tool name	Description	
KV99231260 (J-38874) Clutch disc wrench	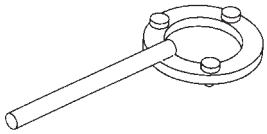 NT204	Removing shaft nut and clutch disc
KV99232340 (J-38874) Clutch disc puller	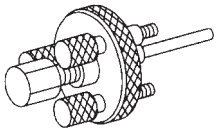 NT206	Removing clutch disc
KV99234330 (J-39024) Pulley installer	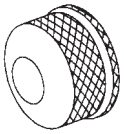 NT207	Installing pulley
KV99233130 (J-39023) Pulley puller	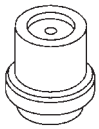 NT208	Removing pulley

HFC-134a (R-134a) Service Tools and Equipment

=NCHA0009

Never mix HFC-134a refrigerant and/or its specified lubricant with CFC-12 (R-12) refrigerant and/or its lubricant.
Separate and non-interchangeable service equipment must be used for handling each type of refrigerant/lubricant.
Refrigerant container fittings, service hose fittings and service equipment fittings (equipment which handles refrigerant and/or lubricant) are different between CFC-12 (R-12) and HFC-134a (R-134a). This is to avoid mixed use of the refrigerants/lubricant.
Adapters that convert one size fitting to another must never be used: refrigerant/lubricant contamination will occur and compressor failure will result.

Tool number (Kent-Moore No.) Tool name	Description	
HFC-134a (R-134a) refrigerant	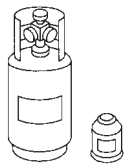 NT196	Container color: Light blue Container marking: HFC-134a (R-134a) Fitting size: Thread size ● Large container 1/2″-16 ACME
KLH00-PAGR0 (—) Nissan A/C System Oil Type R	 NT197	Type: Poly alkylene glycol oil (PAG), type R Application: HFC-134a (R-134a) vane rotary compressors (Nissan only) Lubricity: 40 mℓ (1.4 US fl oz, 1.4 Imp fl oz)
(J-39500-INF) Recovery/Recycling Recharging equipment (ACR4)	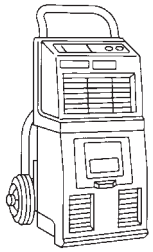 NT195	Function: Refrigerant Recovery and Recycling and Recharging
(J-41995) Electrical leak detector	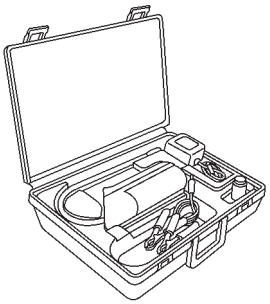 AHA281A	Power supply: ● DC 12V (Cigarette lighter)

HFC-134a (R-134a) Service Tools and Equipment (Cont'd)

Tool number (Kent-Moore No.) Tool name	Description	
(J-43926) Refrigerant dye leak detection kit Kit includes: (J-42220) UV lamp and UV safety glasses (J-41459) Refrigerant dye injector (J-41447) qty. 24 R-134a refrigerant dye (J-43872) Refrigerant dye cleaner	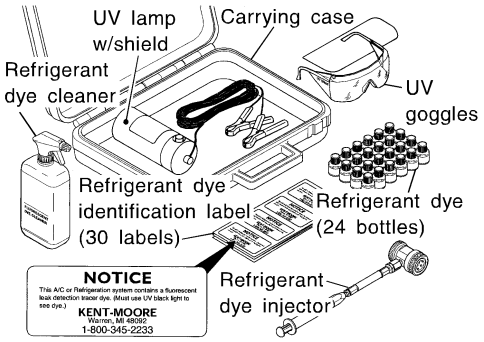 SHA437F	Power supply: DC 12V (Battery terminal)
(J-42220) Fluorescent dye leak detector	UV lamp UV safety glasses 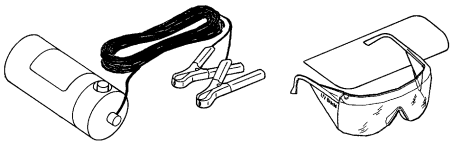 SHA438F	Power supply: DC12V (Battery terminal) For checking refrigerant leak when fluorescent dye is installed in A/C system. Includes: UV lamp and UV safety glasses
(J-41447) R134a Fluorescent Leak Detection Dye (Box of 24, 1/4 ounce bottles)	Dye 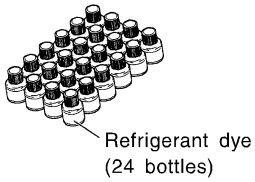 SHA439F	Application: For R-134a PAG oil Container: 1/4 ounce (7.4 cc) bottle (Includes self-adhesive dye identification labels for affixing to vehicle after charging system with dye.)
(J-41459) R134a Dye Injector Use with J-41447, 1/4 ounce bottle	Dye injector 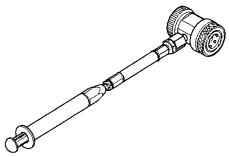 SHA440F	For injecting 1/4 ounce of Fluorescent Leak Detection Dye into A/C system.
(J-43872) Dye cleaner	 SHA441F	For cleaning dye spills.
(J-39183) Manifold gauge set (with hoses and couplers)	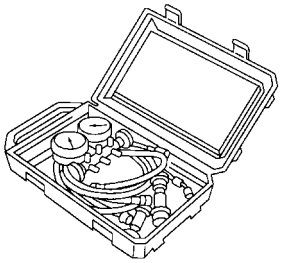 NT199	Identification: ● The gauge face indicates R-134a. Fitting size: Thread size ● 1/2″-16 ACME

Tool number (Kent-Moore No.) Tool name	Description	
Service hoses ● High side hose (J-39501-72) ● Low side hose (J-39502-72) ● Utility hose (J-39476-72)	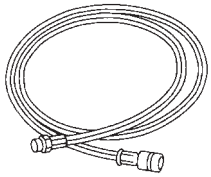 NT201	Hose color: ● Low hose: Blue with black stripe ● High hose: Red with black stripe ● Utility hose: Yellow with black stripe or green with black stripe Hose fitting to gauge: ● 1/2″-16 ACME
Service couplers ● High side coupler (J-39500-20) ● Low side coupler (J-39500-24)	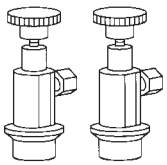 NT202	Hose fitting to service hose: ● M14 x 1.5 fitting is optional or permanently attached.
(J-39650) Refrigerant weight scale	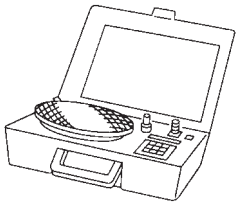 NT200	For measuring of refrigerant Fitting size: Thread size ● 1/2″-16 ACME
(J-39649) Vacuum pump (Including the isolator valve)	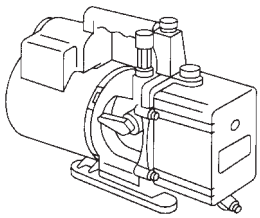 NT203	Capacity: ● Air displacement: 4 CFM ● Micron rating: 20 microns ● Oil capacity: 482 g (17 oz) Fitting size: Thread size ● 1/2″-16 ACME

COMMERCIAL SERVICE TOOL

NCHA0009S01

Tool name	Description	
Refrigerant identifier equipment	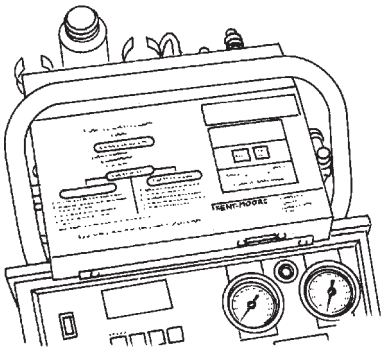 NT765	For checks refrigerant purity and for system contamination

Refrigeration System

REFRIGERATION CYCLE

NCHA0010

Refrigerant Flow

NCHA0010S01

The refrigerant flows in the standard pattern, that is, through the compressor, the condenser, the liquid tank, through the evaporator, and back to the compressor. The refrigerant evaporation through the evaporator coil is controlled by an externally equalized expansion valve, located inside the evaporator case.

Freeze Protection

NCHA0010S02

The compressor cycles go on and off to maintain the evaporator temperature within a specified range. When the evaporator coil temperature falls below a specified point, the thermo control amplifier interrupts the compressor operation. When the evaporator coil temperature rises above the specification, the thermo control amplifier allows compressor operation.

Refrigerant System Protection

NCHA0010S03

Refrigerant Pressure Sensor

NCHA0010S0303

The refrigerant system is protected against excessively high or low pressures by the refrigerant pressure sensor, located on the liquid tank. If the system pressure rises above, or falls below the specifications, the refrigerant pressure sensor detects the pressure inside the refrigerant line and sends the voltage signal to the ECM. ECM makes the A/C relay go OFF and stops the compressor when pressure on the high pressure side detected by refrigerant pressure sensor is over about 2,746 kPa (28 kg/cm^2, 398 psi) or below about 177 kPa (1.8 kg/cm^2, 26 psi).

Pressure Relief Valve

NCHA0010S0302

The refrigerant system is also protected by a pressure relief valve, located in the rear head of the compressor. When the pressure of refrigerant in the system increases to an abnormal level [more than 3,727 kPa (38 kg/cm^2, 540 psi)], the release port on the pressure relief valve automatically opens and releases refrigerant into the atmosphere.

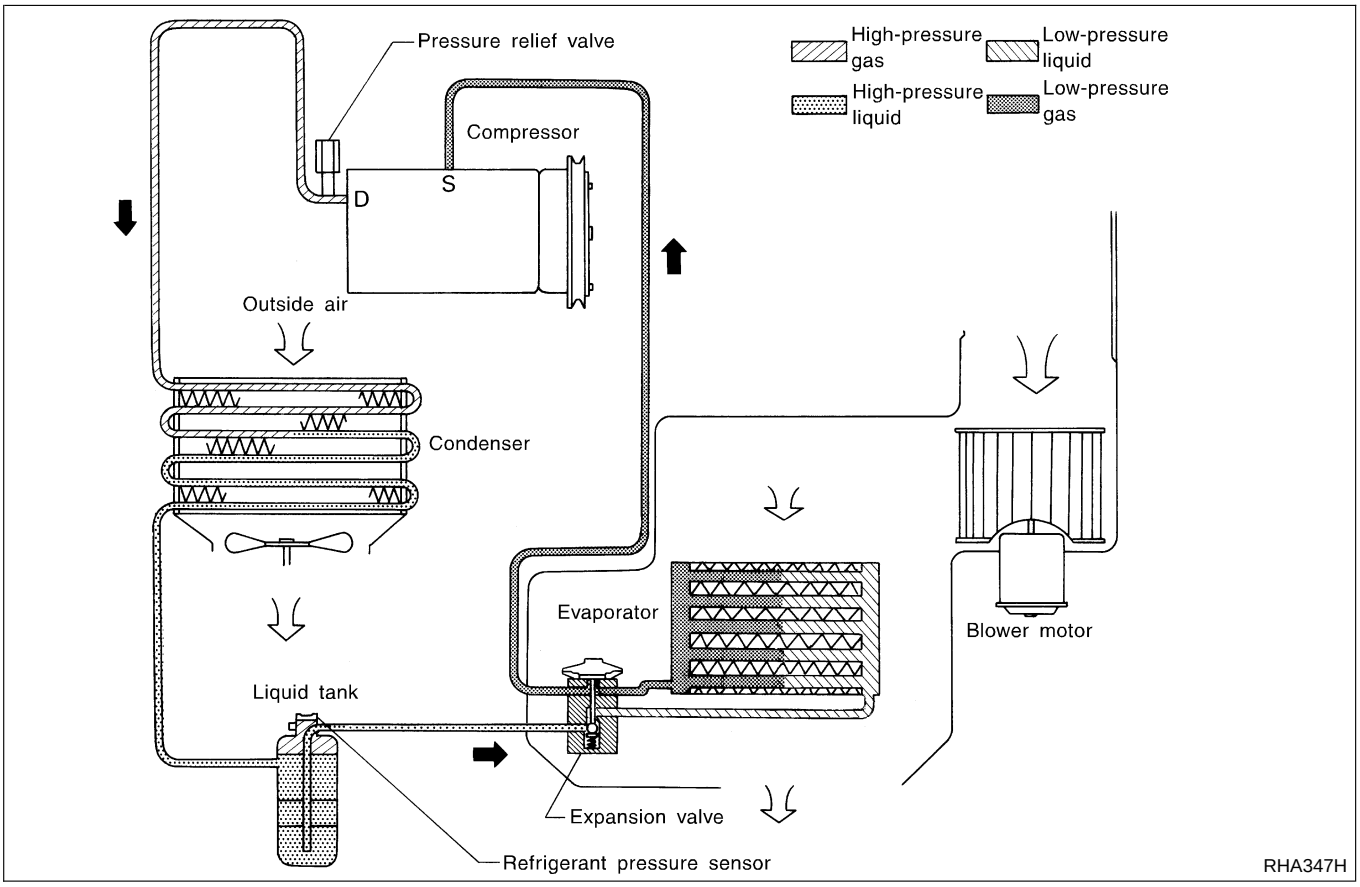

Component Layout

NCHA0012

SEC. 270•271•272•273

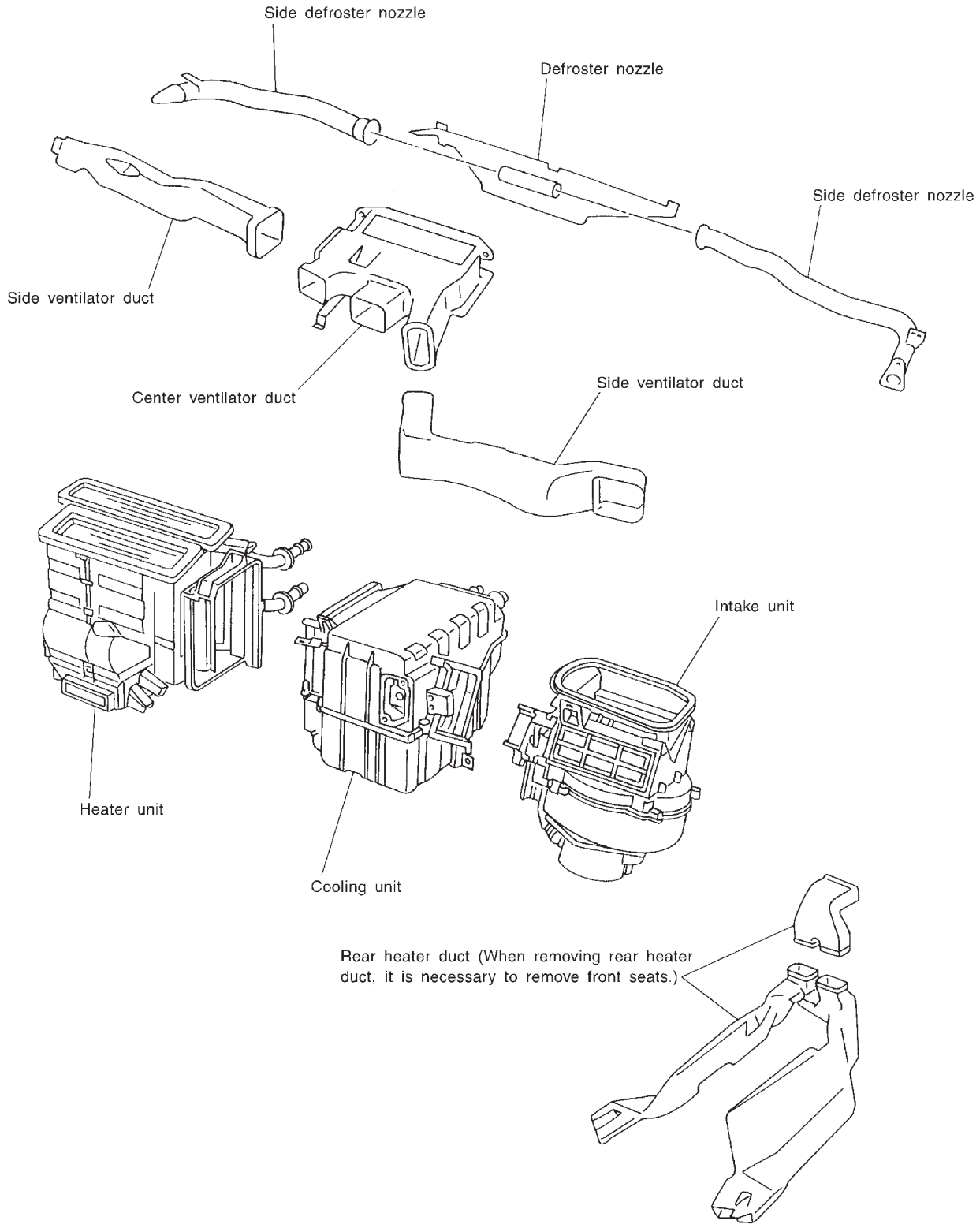

RHA041H

Introduction

NCHA0013

AIR CONDITIONER LAN SYSTEM OVERVIEW CONTROL SYSTEM

NCHA0013S01

The LAN system consists of auto amp., air mix door motor and mode door motor.
A configuration of these components is shown in the diagram below.

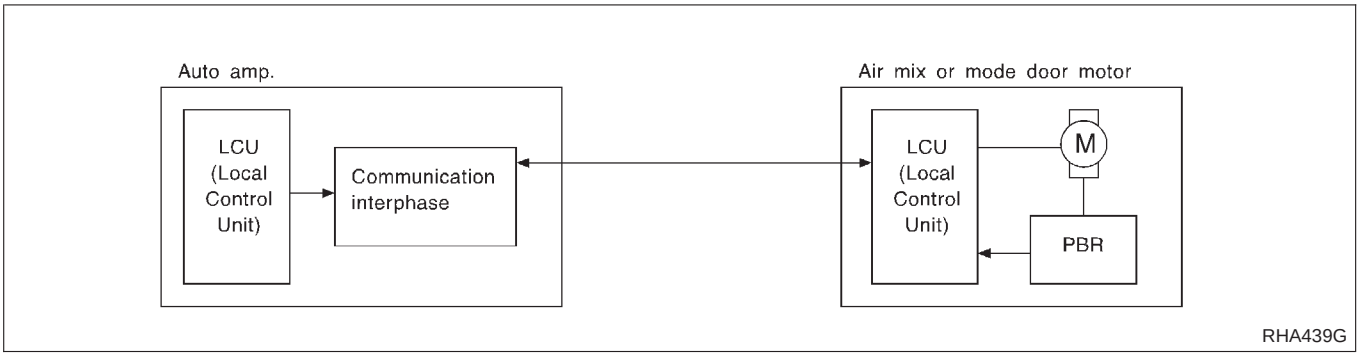

Features

NCHA0014

SYSTEM CONSTRUCTION (LAN)

NCHA0014S08

A small network is constructed between the auto amplifier, air mix door motor and mode door motor. The auto amplifier and motors are connected by data transmission lines and motor power supply lines. The LAN network is built through the ground circuits of the two motors.
Addresses, motor opening angle signals, motor stop signals and error checking messages are all transmitted through the data transmission lines connecting the auto amplifier and two motors.
The following functions are contained in LCUs built into the air mix door motor and the mode door motor.

- Address
- Motor opening angle signals
- Data transmission
- Motor stop and drive decision
- Opening angle sensor (PBR function)
- Comparison
- Decision (Auto amplifier indicated value and motor opening angle comparison)

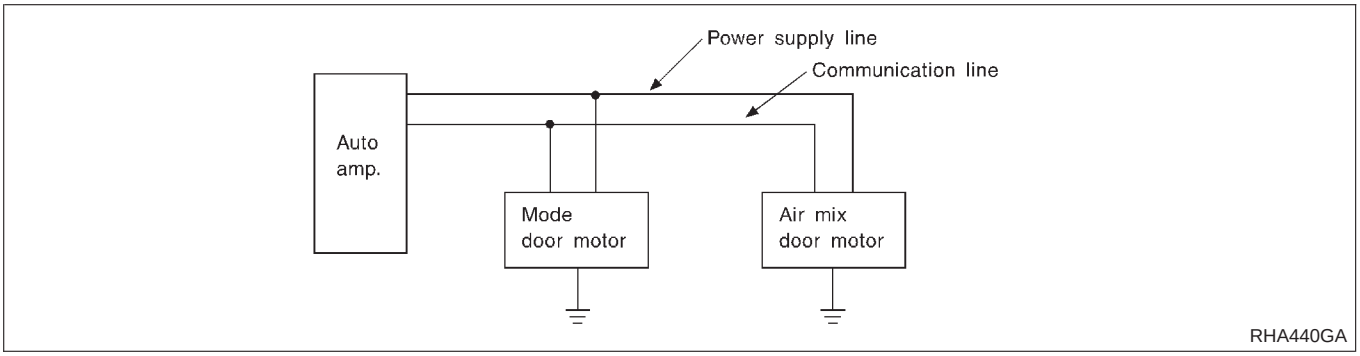

Operation

NCHA0014S0801

The auto amplifier receives data from each of the sensors. The amplifier sends air mix door and mode door opening angle data to the air mix door motor LCU and mode door motor LCU.
The air mix door motor and mode door motor read their respective signals according to the address signal. Opening angle indication signals received from the auto amplifier and each of the motor position sensors are compared by the LCUs in each motor with the existing decision and opening angles. Subsequently, HOT/COLD or DEFROST/VENT operation is selected. The new selection data is returned to the auto amplifier.

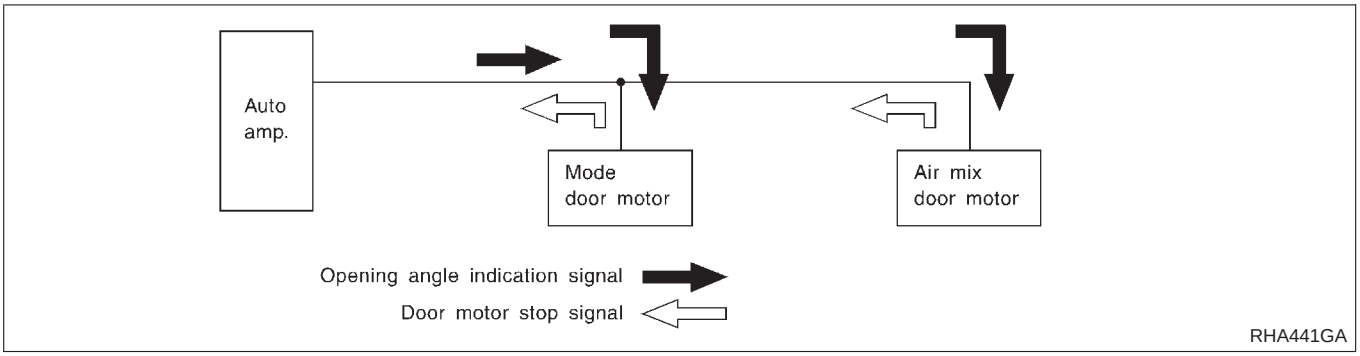

Transmission Data and Transmission Order

NCHA0014S0802

Amplifier data is transmitted consecutively to each of the door motors following the form shown in figure below.
Start: Initial compulsory signal sent to each of the door motors.
Address: Data sent from the auto amplifier is selected according to data-based decisions made by the air mix door motor and mode door motor.
If the addresses are identical, the opening angle data and error check signals are received by the door motor LCUs. The LCUs then make the appropriate error decision. If the opening angle data is normal, door control begins.
If an error exists, the received data is rejected and corrected data received. Finally, door control is based upon the corrected opening angle data.
Opening angle: Data that shows the indicated door opening angle of each door motor.
Error check: Procedure by which sent and received data is checked for errors. Error data is then compiled. The error check prevents corrupted data from being used by the air mix door motor and mode door motor. Error data can be related to the following problems.

- Abnormal electrical frequency
- Poor electrical connections
- Signal leakage from transmission lines
- Signal level fluctuation

Stop signal: At the end of each transmission, a stop operation, in-operation, or internal problem message is delivered to the auto amplifier. This completes one data transmission and control cycle.

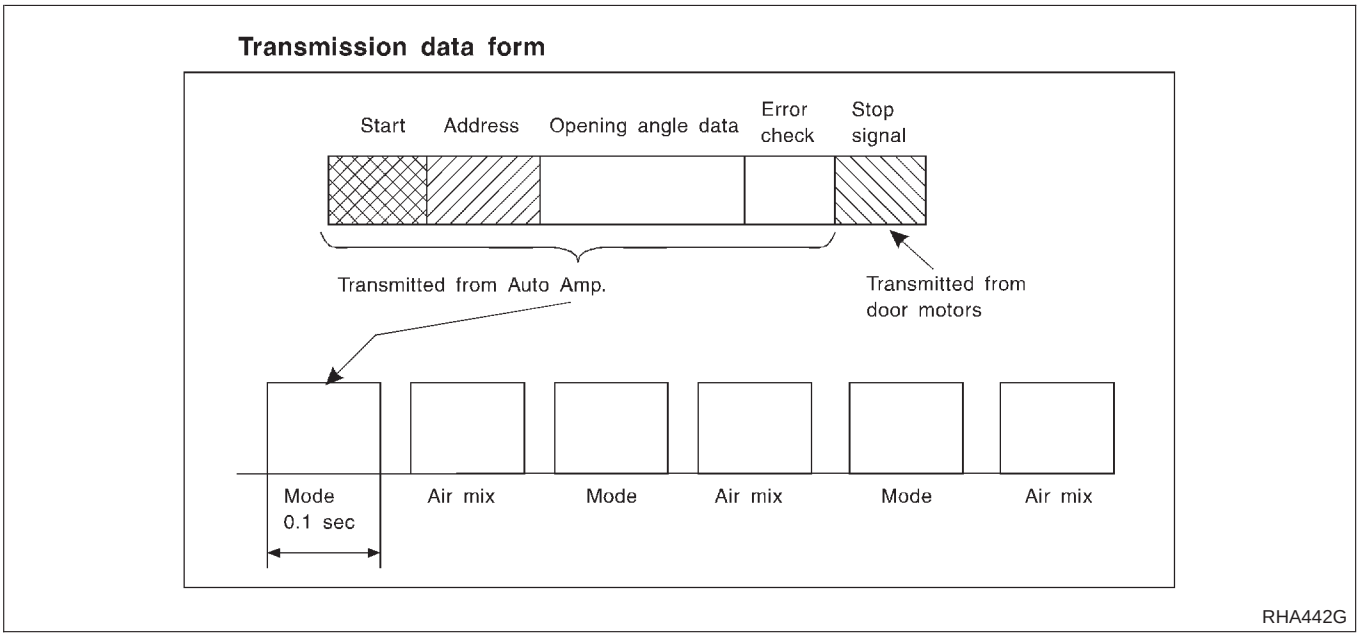

Air Mix Door Control (Automatic Temperature Control)

NCHA0014S0803

The air mix door is automatically controlled so that in-vehicle temperature is maintained at a predetermined value by: The temperature setting, ambient temperature, in-vehicle temperature and amount of sunload.

Fan Speed Control

NCHA0014S0804

Blower speed is automatically controlled based on temperature setting, ambient temperature, in-vehicle temperature, intake temperature, amount of sunload and air mix door position.
With FAN switch set to "AUTO", the blower motor starts to gradually increase air flow volume.
When engine coolant temperature is low, the blower motor operation is delayed to prevent cool air from flowing.

Intake Door Control

NCHA0014S0805

The intake doors are automatically controlled by: The temperature setting, ambient temperature, in-vehicle temperature, intake temperature, amount of sunload and ON-OFF operation of the compressor.

Outlet Door Control

NCHA0014S0806

The outlet door is automatically controlled by: The temperature setting, ambient temperature, in-vehicle temperature, intake temperature and amount of sunload.

Magnet Clutch Control

NCHA0014S0807

The ECM controls compressor operation using input signals from the throttle position sensor and auto amplifier.

Self-diagnostic System

NCHA0014S0808

The self-diagnostic system is built into the auto amplifier (LCU) to quickly locate the cause of problems.

Overview of Control System

=NCHA0015

The control system consists of input sensors, switches, the automatic amplifier (microcomputer) and outputs. The relationship of these components is shown in the diagram below:

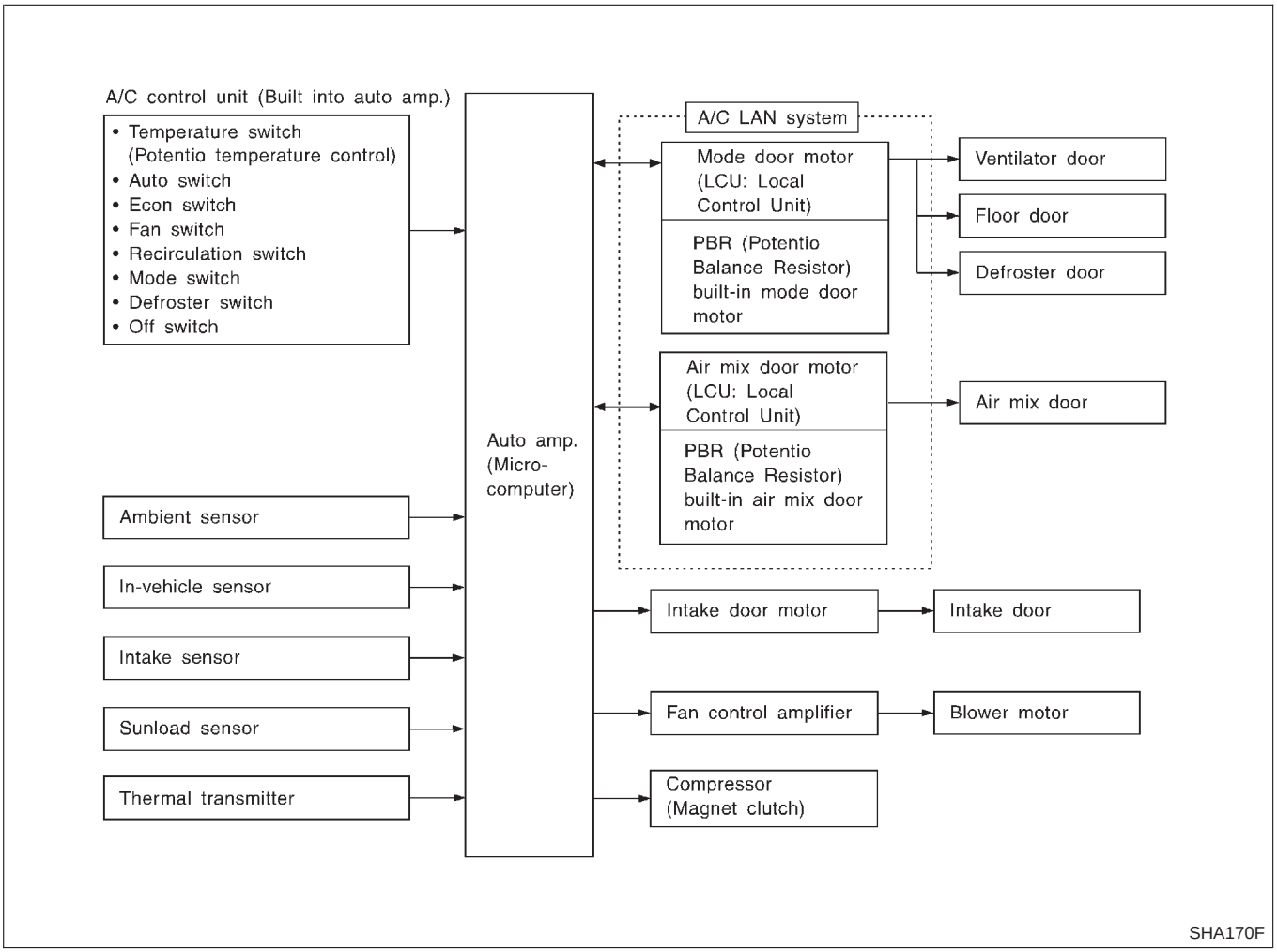

Control Operation

NCHA0016

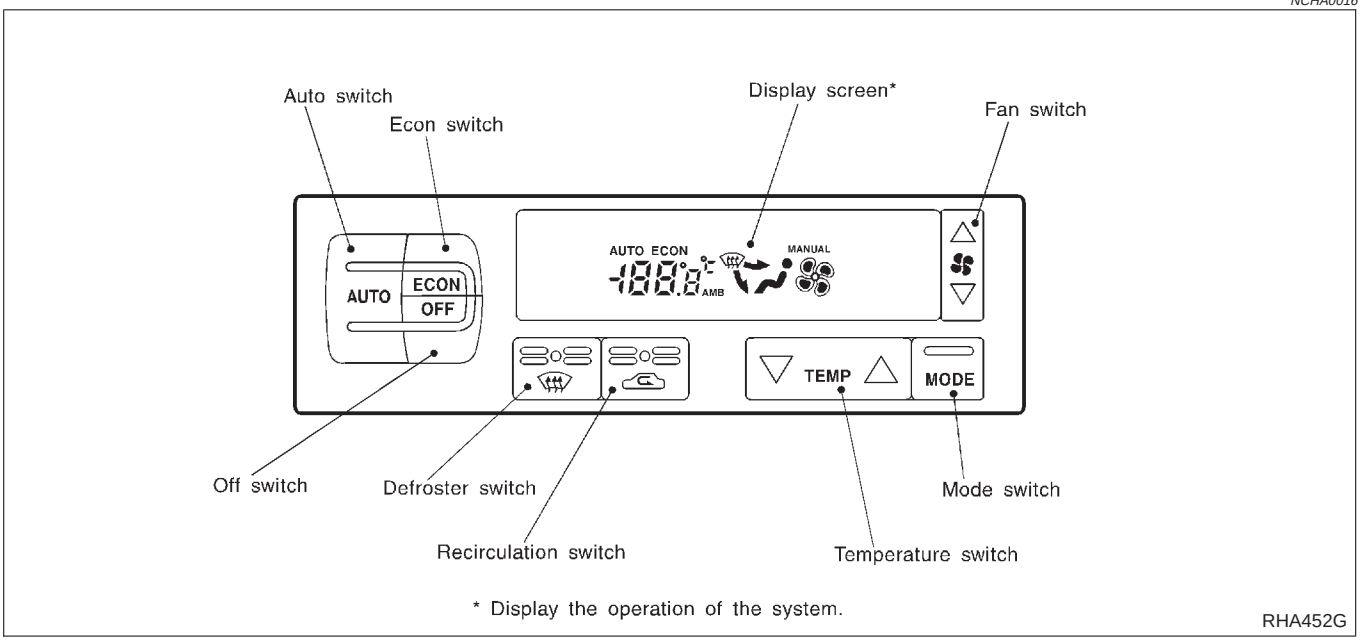

DISPLAY SCREEN

NCHA0016S01

Displays the operational status of the system.

AUTO SWITCH

NCHA0016S02

The compressor, intake doors, air mix door, outlet doors, and blower speed are automatically controlled so that the in-vehicle temperature will reach, and be maintained at the set temperature selected by the operator.

ECON SWITCH

NCHA0016S03

By pressing the ECON switch, the display should indicate ECON and the compressor always turns OFF. With the compressor OFF, the system will not remove heat (cool) or de-humidify. The system will maintain the in-vehicle temperature at the set temperature when the set temperature is above the ambient (outside) temperature. The system will set the intake doors to the outside air position.

TEMPERATURE SWITCH (POTENTIO TEMPERATURE CONTROL)

NCHA0016S04

Increases or decreases the set temperature.

OFF SWITCH

NCHA0016S05

The compressor and blower are OFF, the intake doors are set to the outside air position, and the air outlet doors are set to the foot (80% foot and 20% defrost) position.

FAN SWITCH

NCHA0016S06

Manual control of the blower speed. Four speeds are available for manual control (as shown on the display screen):
low , medium low , medium high , high

RECIRCULATION (REC) SWITCH

NCHA0016S07

OFF position: Outside air is drawn into the passenger compartment.
ON position: Interior air is recirculated inside the vehicle.

DEFROSTER (DEF) SWITCH

NCHA0016S08

Positions the air outlet doors to the defrost position. Also positions the intake doors to the outside air position.

MODE SWITCH

NCHA0016S09

Controls the air discharge outlets.

Discharge Air Flow

NCHA0017

Air outlets

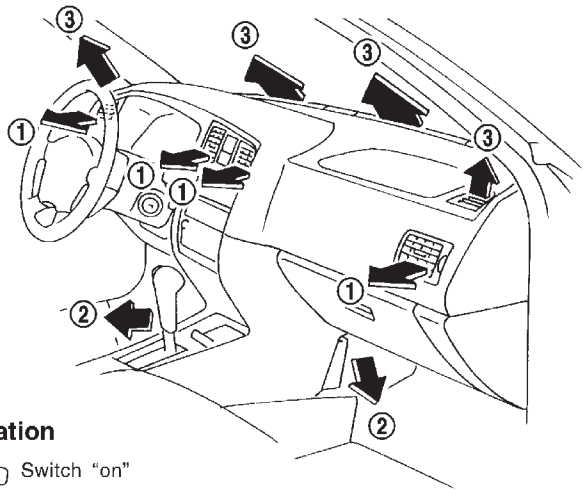

Foot

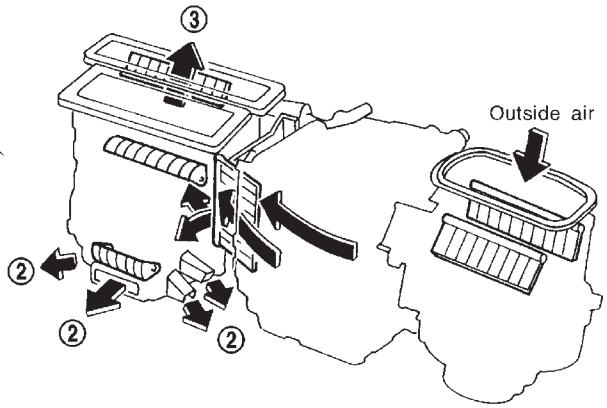

Ventilation

Switch "on"

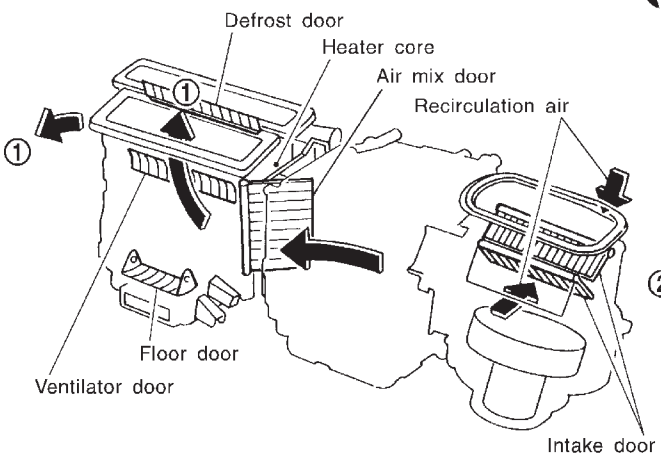

Foot and defrost

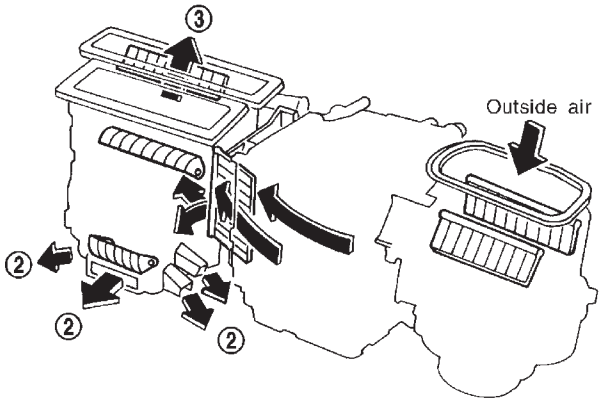

Bi-level

Switch "off"

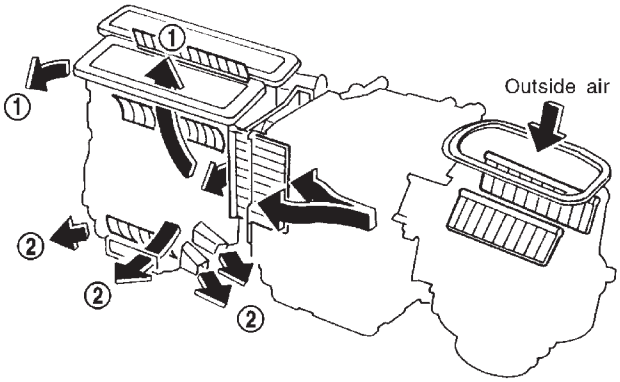

Defrost

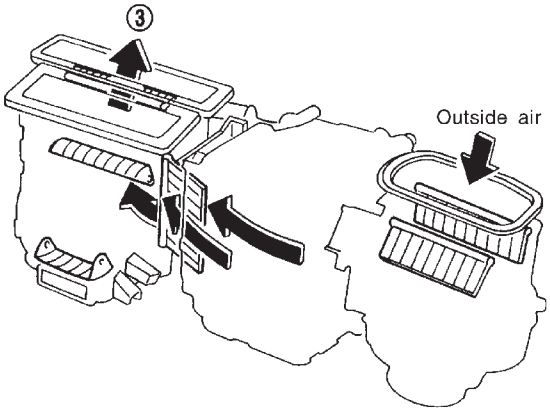

① : To face
② : To foot
③ : To defrost

For air flow %, refer to "Operational Check", "TROUBLE DIAGNOSES".

RHA042H

Discharge Air Flow (Cont'd)

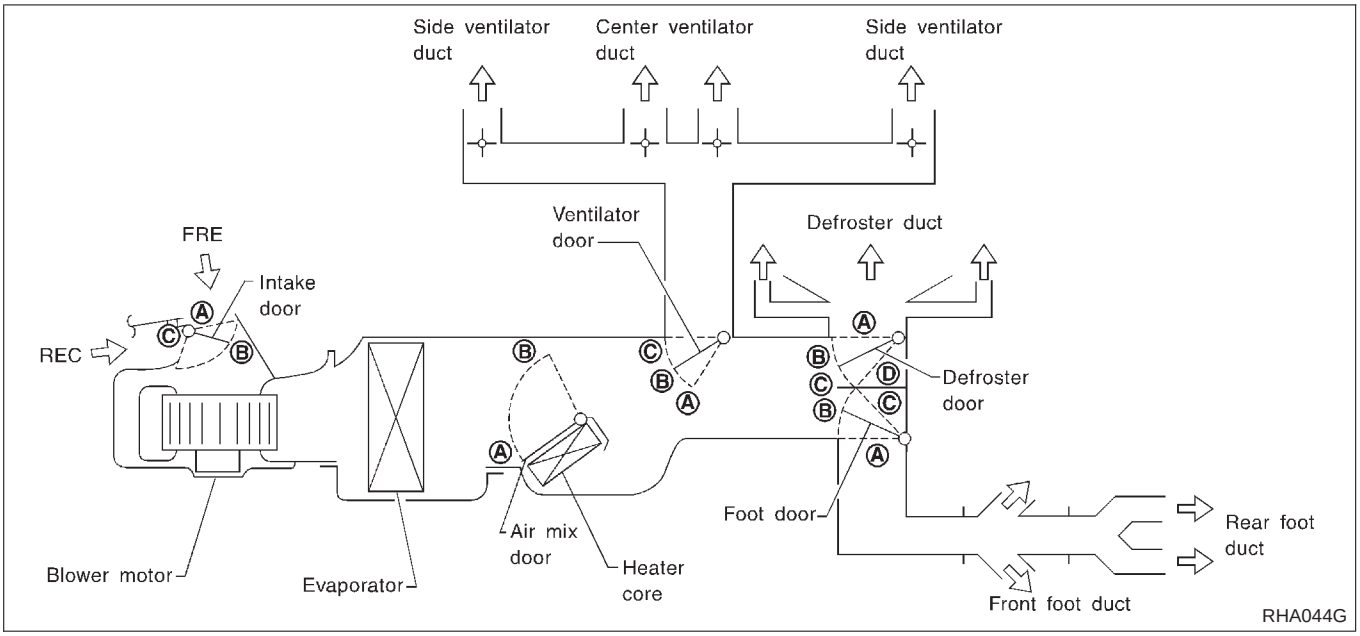

Position or switch	MODE SW				DEF SW		AUTO SW	ECON SW	REC SW		Temperature SW		
	VENT	B/L	FOOT	D/F	ON	OFF			ON	OFF	▼ TEMP ▲		
							AUTO	ECON					
Door											18.0°C (65°F)	—	32.0°C (85°F)
Ventilator door	A	B	C	C	C	—	AUTO	AUTO	—		—		
Foot door	A	B	D	C	A				—		—		
Defroster door	A	A	B	C	D				—		—		
Air mix door	—				—				—		A	AUTO	B
Intake door	—				C				A	AUTO*1	—		

*1: Automatically controlled when REC switch is OFF.

Component Location

ENGINE COMPARTMENT

NCHA0033

NCHA0033S01

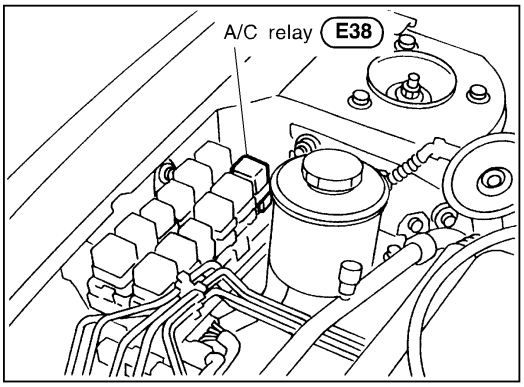

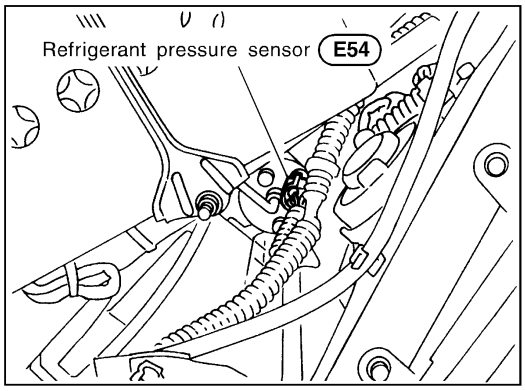

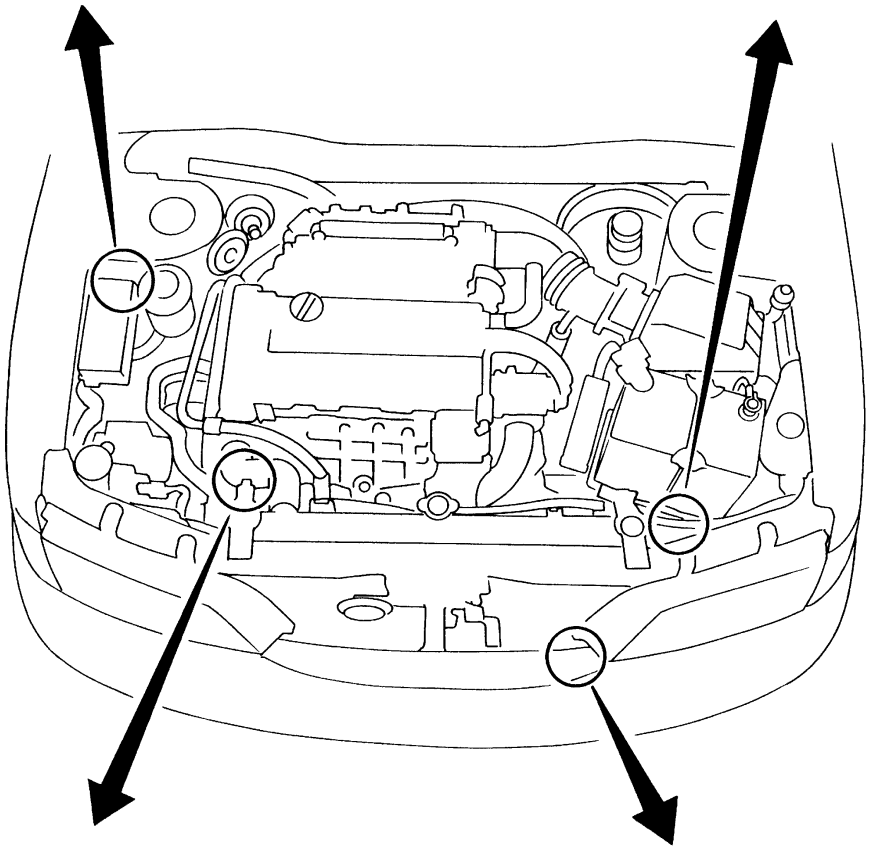

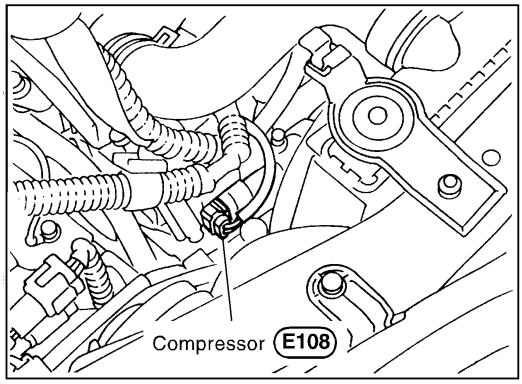

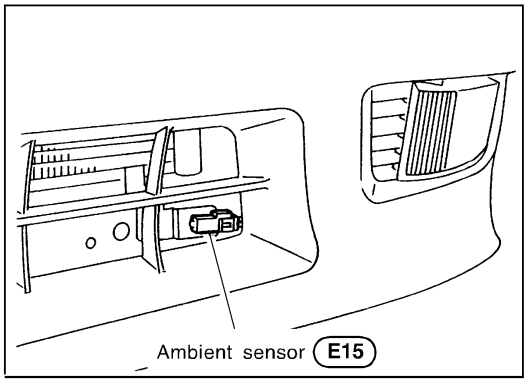

RHA043HB

PASSENGER COMPARTMENT

NCHA0033S02

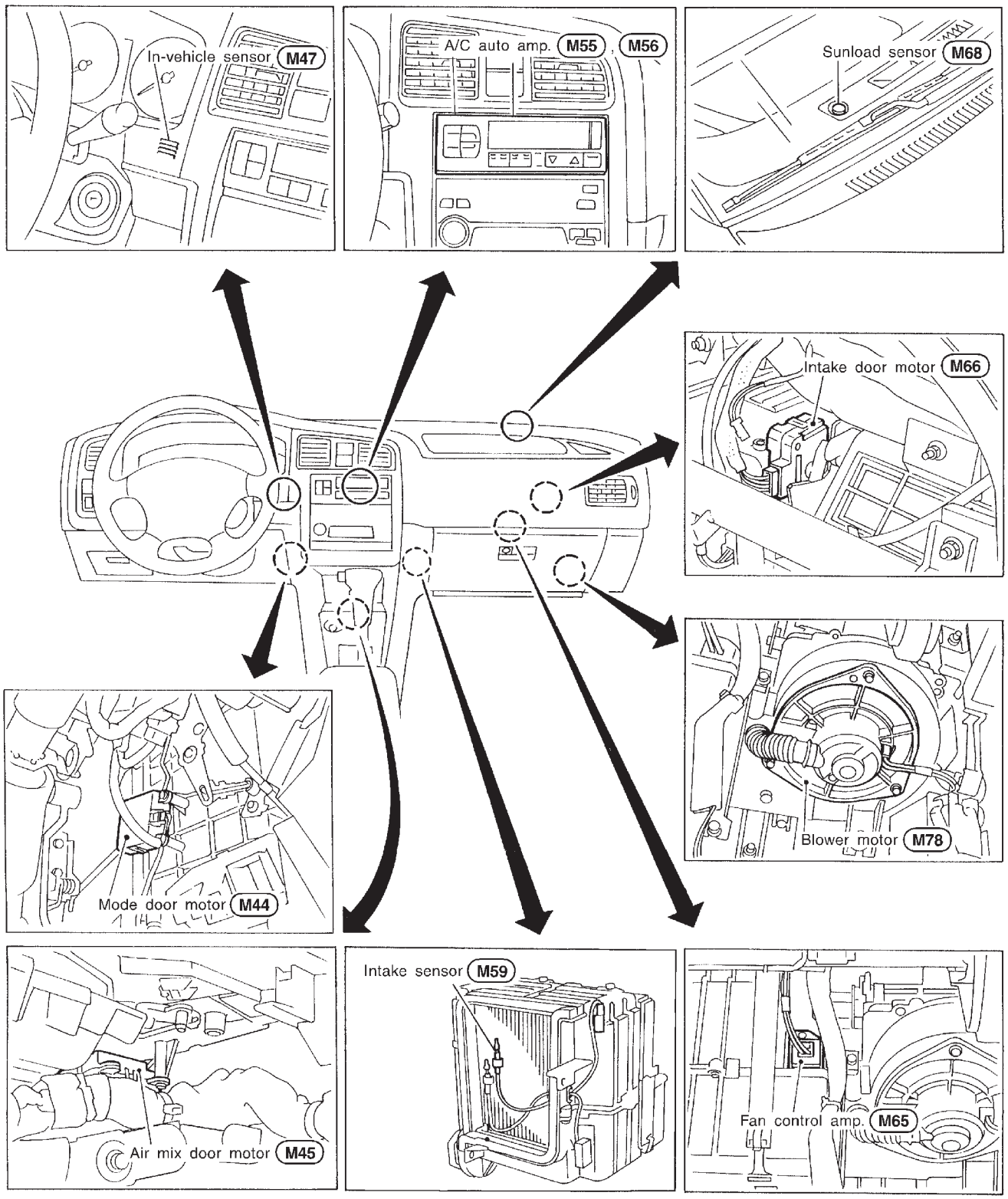

SHA171F

Circuit Diagram

NCHA0034

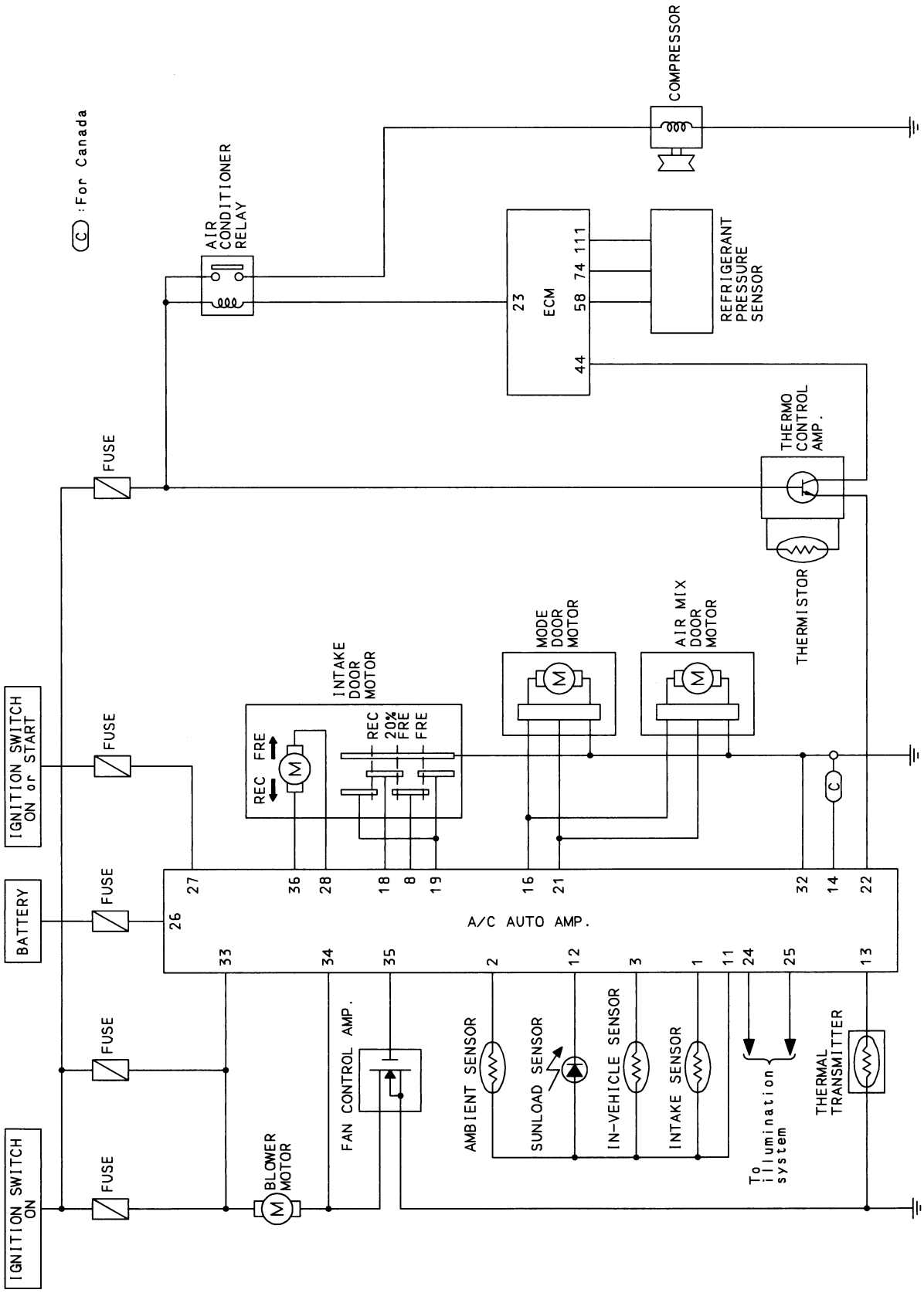

THA249

Wiring Diagram — A/C, A —

NCHA0035

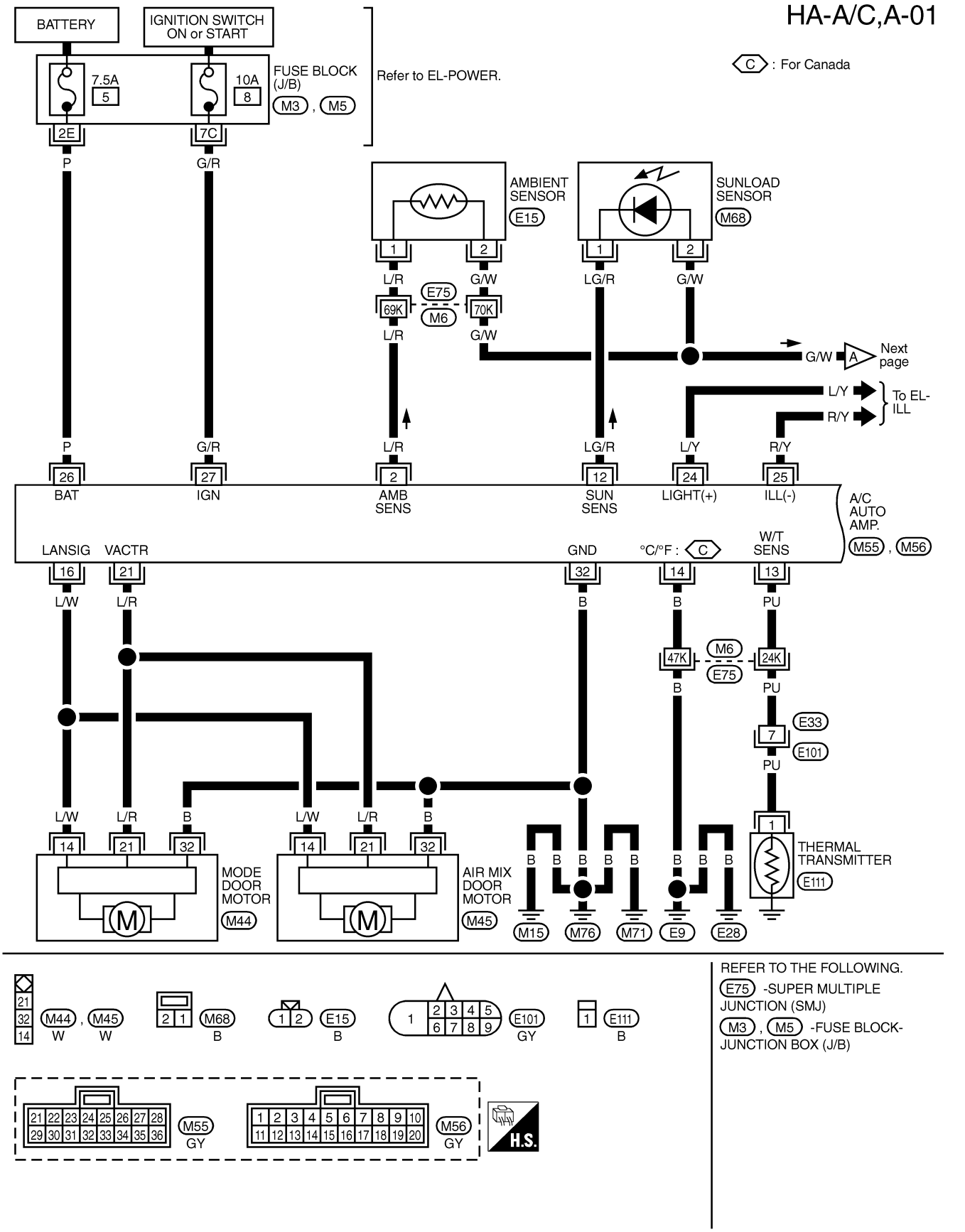

REFER TO THE FOLLOWING.
E75 -SUPER MULTIPLE JUNCTION (SMJ)
M3 , M5 -FUSE BLOCK-JUNCTION BOX (J/B)

THA250

HA-A/C,A-02

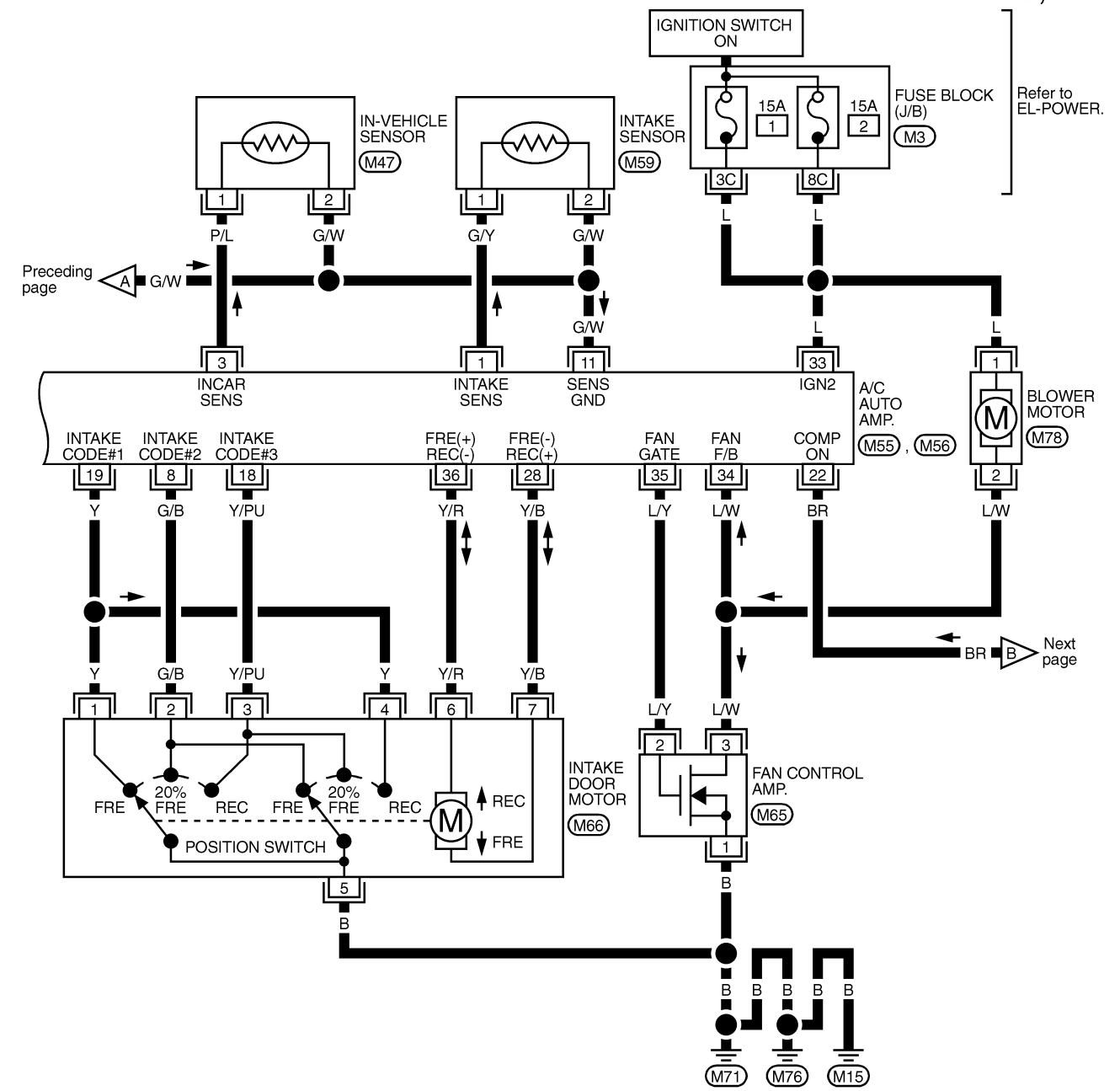

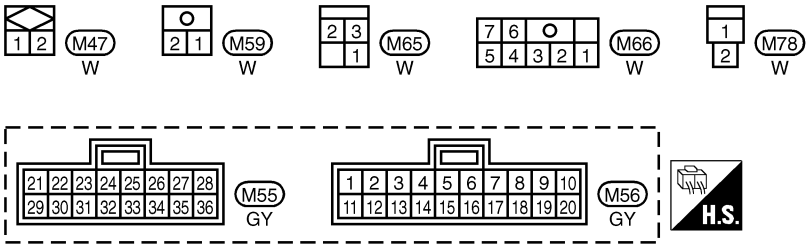

REFER TO THE FOLLOWING.
M3 -FUSE BLOCK-JUNCTION BOX (J/B)

THA251

HA-A/C,A-03

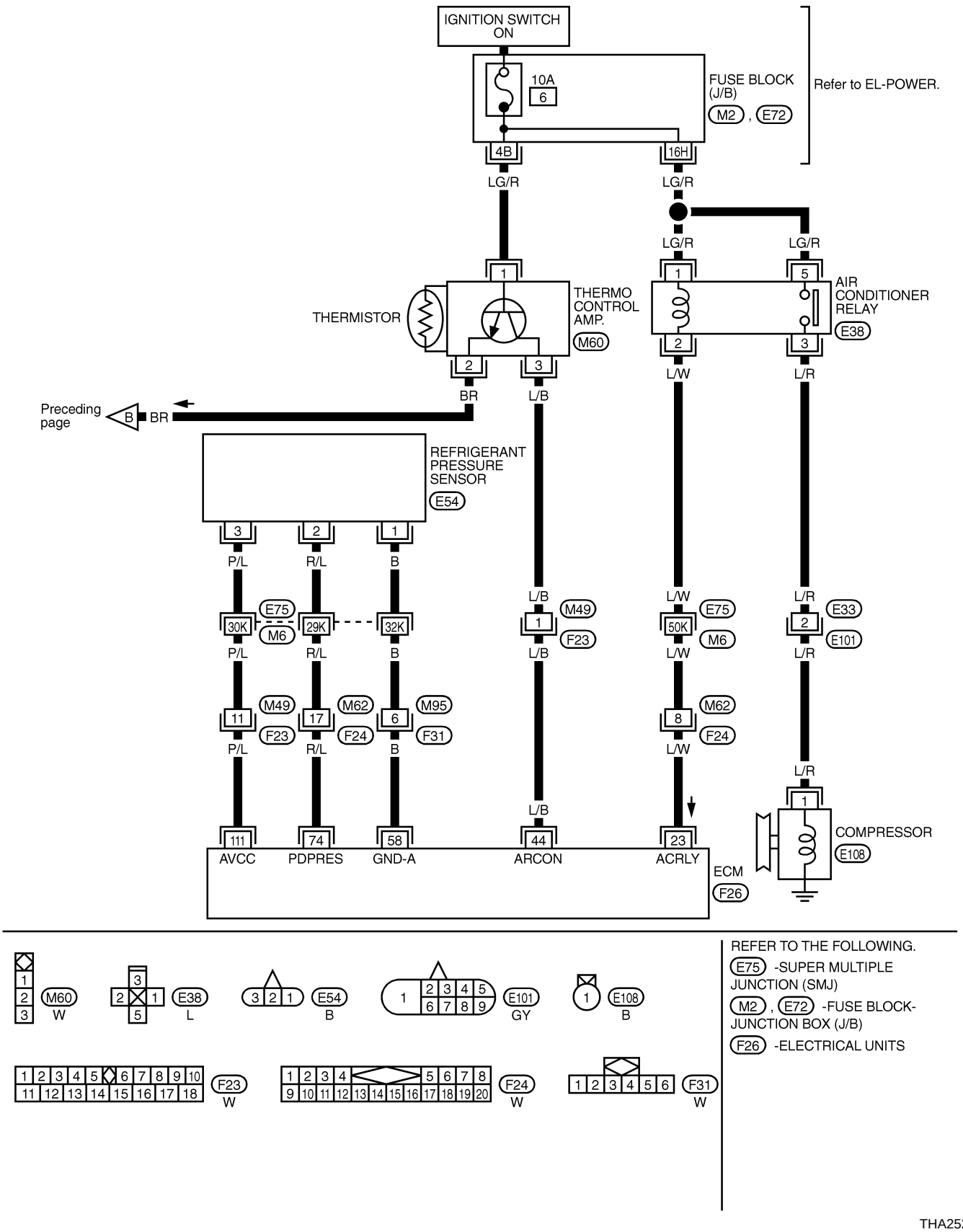
IGNITION SWITCH ON
10A
6
FUSE BLOCK (J/B)
M2 , E72
Refer to EL-POWER.
4B
16H
LG/R
LG/R
LG/R
LG/R
THERMISTOR
THERMO CONTROL AMP.
M60
AIR CONDITIONER RELAY
E38
L/W
L/R
BR
L/B
Preceding page
B
BR
REFRIGERANT PRESSURE SENSOR
E54
P/L
R/L
B
E75
M6
30K
29K
32K
L/B
M49
F23
L/W
50K
E33
E101
M49
F23
M62
F24
M95
F31
M62
F24
111
74
58
44
23
AVCC
PDPRES
GND-A
ARCON
ACRLY
ECM
F26
COMPRESSOR
E108
REFER TO THE FOLLOWING.
E75 -SUPER MULTIPLE JUNCTION (SMJ)
M2 , E72 -FUSE BLOCK-JUNCTION BOX (J/B)
F26 -ELECTRICAL UNITS
M60 W
E38 L
E54 B
E101 GY
E108 B
F23 W
F24 W
F31 W
THA252

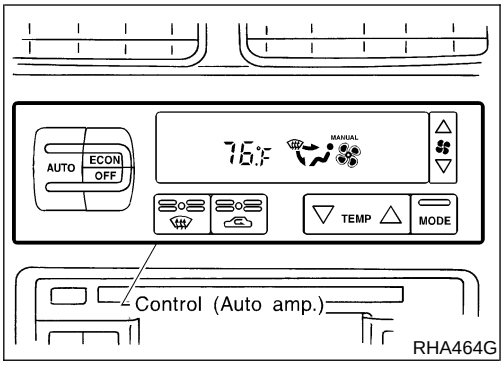

Auto Amp. Terminals and Reference Value

NCHA0036

INSPECTION OF AUTO AMP.

NCHA0036S01

- Measure voltage between each terminal and body ground by following “AUTO AMP. INSPECTION TABLE”.

- Pin connector terminal layout

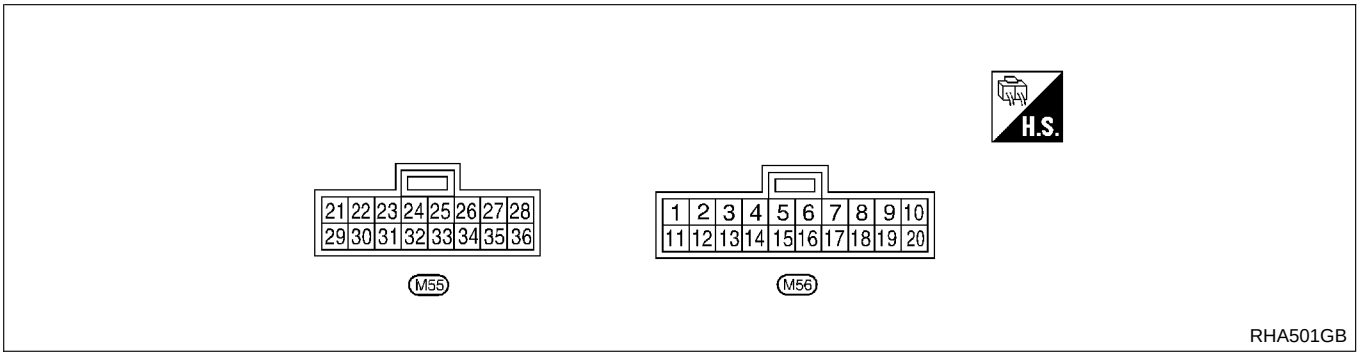

AUTO AMP. INSPECTION TABLE

NCHA0036S02

TERMINAL NO.	ITEM	CONDITION			Voltage V
1	Intake sensor	—			—
2	Ambient sensor	—			—
3	In-vehicle sensor	—			—
8	Intake door position switch	ON	Intake door position	FRESH or 20% FRESH	Approximately 0
				RECIRCULATION	Approximately 4.6
11	Sensor ground		—		Approximately 0
12	Sunload sensor	—			—
13	Thermal transmitter		Engine coolant temperature	Approximately 40°C (104°F)	Approximately 10.8
				Approximately 55°C (131°F)	Approximately 9.9
				Approximately 60°C (140°F)	Approximately 9.5
14	Ground (for Canada)		—		Approximately 0
16	A/C LAN signal		—		Approximately 5.5
18	Intake door position switch	ON	Intake door position	20% FRESH or RECIRCULATION	Approximately 0
				FRESH	Approximately 4.6
19	Intake door position switch		Intake door position	20% FRE	Approximately 0
				RECIRCULATION or FRESH	Approximately 4.7
21	Power supply for mode door motor and air mix door motor		—		Approximately 12

Auto Amp. Terminals and Reference Value (Cont'd)

TERMI-NAL NO.	ITEM	CONDITION			Voltage V
22	Compressor ON signal		Compressor	ON	Approximately 0
				OFF	Approximately 4.6
26	Power supply for BAT	OFF	—		BATTERY VOLTAGE
27	Power supply for IGN	ON	—		Approximately 12
28	Power supply for intake door motor		Intake door position	FRESH	Approximately 0
				RECIRCULATION	Approximately 12
32	Ground		—		Approximately 0
33	Power source for A/C		Ignition voltage feed back		Approximately 12
34	Blower motor feed back		Fan speed: Low		Approximately 7 - 10
35	Fan control AMP. control signal		Fan speed	Low, Middle low or Middle high	Approximately 2.5 - 3.0
				High	Approximately 9 - 10
36	Power supply for intake door motor		Intake door position	FRESH	Approximately 12
				RECIRCULATION	Approximately 0

Self-diagnosis

=NCHA0021

INTRODUCTION AND GENERAL DESCRIPTION

NCHA0021S01

The self-diagnostic system diagnoses sensors, door motors, blower motor, etc. by system line. Refer to applicable sections (items) for details. Shifting from normal control to the self-diagnostic system is accomplished by starting the engine (turning the ignition switch from “OFF” to “ON”) and pressing “ OFF ” switch for at least 5 seconds. The “ OFF ” switch must be pressed within 10 seconds after starting the engine (ignition switch is turned “ON”). This system will be canceled by either pressing AUTO (AUTO) switch or turning the ignition switch “OFF”. Shifting from one step to another is accomplished by means of pushing ▲ (HOT) or ▼ (COLD) switch, as required.
Additionally shifting from STEP 5 to AUXILIARY MECHANISM is accomplished by means of pushing ✣ (fan) UP switch.

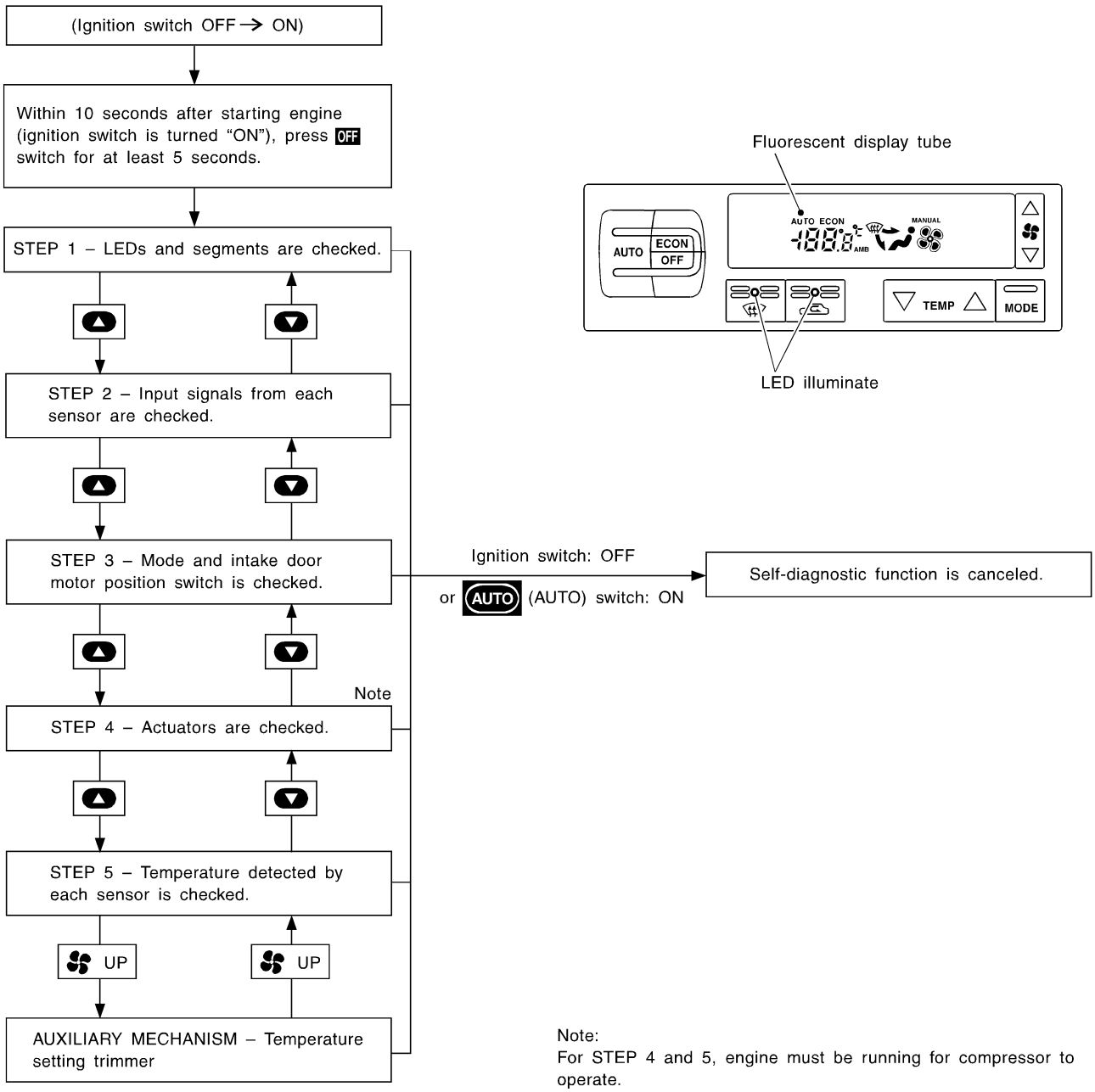

RHA453GA

STEP-BY-STEP PROCEDURE

=NCHA0021S02

1	SET IN SELF-DIAGNOSTIC MODE
1. Turn ignition switch ON. 2. Set in self-diagnostic mode as follows. Within 10 seconds after starting engine (ignition switch is turned "ON".), press OFF switch for at least 5 seconds.	
▶	GO TO 2.

2	STEP 1 - LEDs AND SEGMENT ARE CHECKED
Do all LEDs and segments illuminate?	

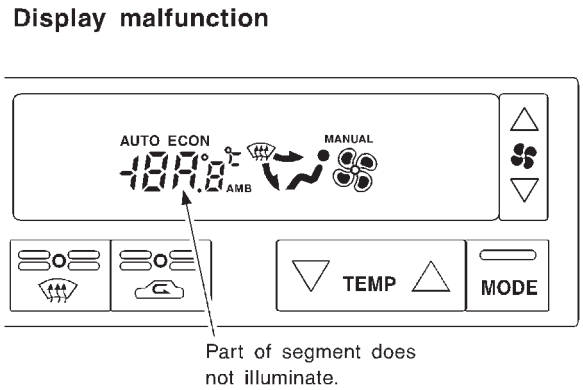

RHA454GA

Yes or No

Yes	▶	GO TO 3.
No	▶	Malfunctioning OFF switch, LED or fluorescent display tube. Replace A/C auto amp.

3	CHECK TO ADVANCE SELF-DIAGNOSIS STEP 2
1. Press ▲ (HOT) switch. 2. Advance to self-diagnosis STEP 2?	

Yes or No

Yes	▶	GO TO 4.
No	▶	Malfunctioning ▲ (HOT) switch. Replace A/C auto amp.

4	CHECK TO RETURN SELF-DIAGNOSIS STEP 1
1. Press ▼ (COLD) switch. 2. Return to self-diagnosis STEP 1?	

Yes or No

Yes	▶	GO TO 5.
No	▶	Malfunctioning ▼ (COLD) switch. Replace A/C auto amp.

5	STEP 2 - SENSOR CIRCUITS ARE CHECKED FOR OPEN OR SHORT CIRCUIT

Press ▲ (HOT) switch.
Does code No. 20 appear on the display?

Display (when all sensors are in good order)

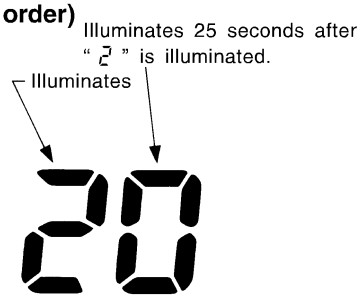

RHA970DB

Yes or No

Yes	▶	GO TO 6.
No	▶	GO TO 13.

6	STEP 3 - MODE DOOR AND INTAKE DOOR POSITIONS ARE CHECKED

Press ▲ (HOT) switch.
Does code No. 30 appear on the display?

Display (when all doors are in good order)

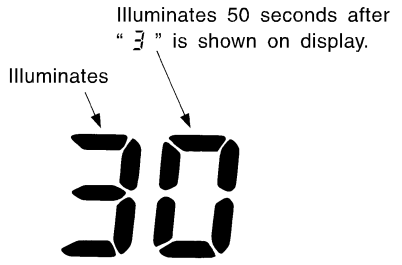

RHA869DD

Yes or No

Yes	▶	GO TO 7.
No	▶	GO TO 14.

7	STEP 4 - OPERATION OF EACH ACTUATOR IS CHECKED
Press ▲ (HOT) switch. Engine running. Press DEF switch, code No. of each actuator test is indicated on the display. 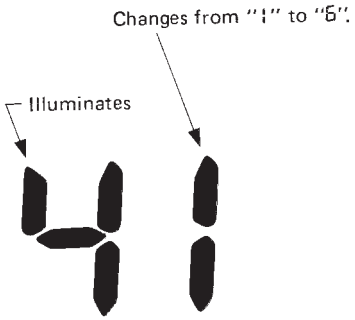 RHA495A	
▶	GO TO 8.

8	CHECK ACTUATORS

Refer to the following chart and confirm discharge air flow, air temperature, blower motor voltage and compressor operation.

Checks must be made visually, by listening to any noise, or by touching air outlets with your hand, etc. for improper operation.

Code No.	Actuator test pattern				
	Mode door	Intake door	Air mix door	Blower motor	Compressor
41	VENT	REC	Full Cold	4 - 5V	ON
42	B/L	REC	Full Cold	9 - 11V	ON
43	B/L	20% FRE	Full Hot	7 - 9V	OFF
44	FOOT	FRE	Full Hot	7 - 9V	OFF
45	D/F	FRE	Full Hot	7 - 9V	ON
46	DEF	FRE	Full Hot	10 - 12V	ON

MTBL0375

Discharge air flow

Mode switch	Air outlet/distribution		
	Face	Foot	Defroster
	100%	—	—
	60%	40%	—
	—	80%	20%
	—	60%	40%
	—	—	100%

MTBL0128

OK or NG

OK	▶	GO TO 9.
NG	▶	• Air outlet does not change. Go to "Mode Door Motor" (HA-48). • Intake door does not change. Go to "Intake Door Motor" (HA-58). • Blower motor operation is malfunctioning. Go to "Blower Motor" (HA-65). • Magnet clutch does not engage. Go to "Magnet Clutch" (HA-73). • Discharge air temperature does not change. Go to "Air Mix Door Motor" (HA-54).

9	STEP 5 - TEMPERATURE OF EACH SENSOR IS CHECKED

Press ▲ (HOT) switch.
Code No. 5 appears on the display.

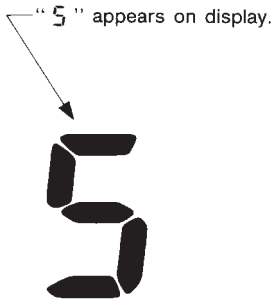

RHA492A

	▶	GO TO 10.

10	CHECK AMBIENT SENSOR

Press (DEF) switch one time, temperature detected by ambient sensor is indicated on the display.
NOTE:
If temperature shown on display greatly differs from actual temperature, check sensor circuit first, then inspect sensor.

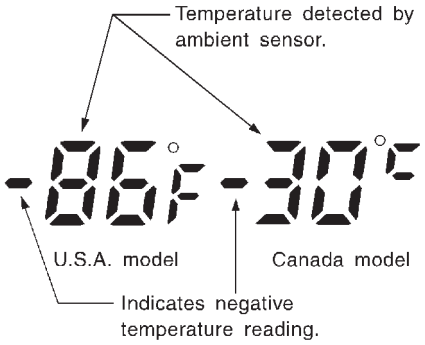

RHA499G

OK or NG

OK	▶	GO TO 11.
NG	▶	Go to Ambient Sensor Circuit (HA-92).

11	CHECK IN-VEHICLE SENSOR

Press (DEF) switch the second time, temperature detected by in-vehicle sensor is indicated on the display.
NOTE:
If temperature shown on display greatly differs from actual temperature, check sensor circuit first, then inspect sensor.

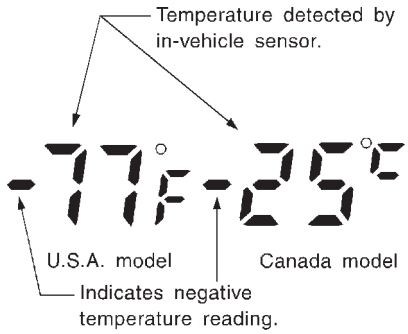

RHA500G

OK or NG

OK	▶	GO TO 12.
NG	▶	Go to In-vehicle Sensor Circuit (HA-95).

12	CHECK INTAKE SENSOR

Press (DEF) switch the third time, temperature detected by intake sensor is indicated on the display.
NOTE:
If temperature shown on display greatly differs from actual temperature, check sensor circuit first, then inspect sensor.

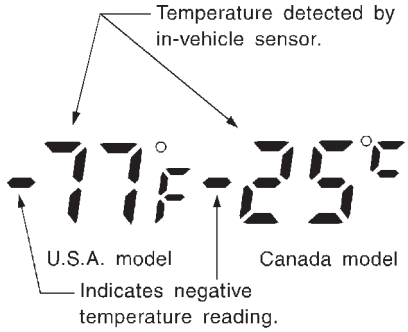

RHA500G

OK or NG

OK	▶	1. Press (DEF) switch the fourth time. Display returns to original presentation 5. 2. Turn ignition switch OFF or (AUTO) switch ON. 3. END
NG	▶	Go to Intake Sensor Circuit (HA-102).

13	CHECK MALFUNCTIONING SENSOR

Refer to the following chart for malfunctioning code No.
(If two or more sensors malfunction, corresponding code Nos. blink respectively two times.)

Code No.	Malfunctioning sensor (including circuits)	Reference page
21	Ambient sensor	*2
-21		
22	In-vehicle sensor	*3
-22		
24	Intake sensor	*4
-24		
25	Sunload sensor*1	*5
-25		
26	Air mix door motor (LCU) PBR	*6
-26		

MTBL0083

***1: Conduct self-diagnosis STEP 2 under sunshine.**
When conducting indoors, aim a light (more than 60W) at sunload sensor, otherwise Code No. 25 will indicate despite that sunload sensor is functioning properly.
*2: HA-92
*3: HA-95
*4: HA-102
*5: HA-99
*6: HA-104

Display (when sensor malfunctions)

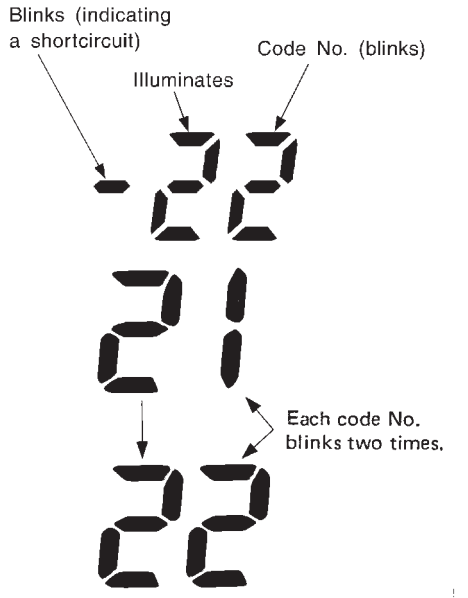

RHA455G

RHA501A

▶	INSPECTION END

14	CHECK MALFUNCTIONING DOOR MOTOR POSITION SWITCH

Mode or (and) intake door motor position switch(es) is (are) malfunctioning.
(If two or more mode or intake doors are out of order, corresponding code numbers blink respectively two times.)

Code No. *1 *2	Mode or intake door position		Reference page
31	VENT	Mode door motor	*3
32	B/L		
34	FOOT		
35	D/F		
36	DEF		
37	FRE	Intake door motor	*4
38	20% FRE		
39	REC		

MTBL0376

*1: If mode door motor harness connector is disconnected, the following display pattern will appear.
31 → 32 → 34 → 35 → 36 → Return to 31
*2: If intake door motor harness connector is disconnected, the following display pattern will appear.
37 → 38 → 39 → Return to 37
*3: HA-48
*4: HA-58

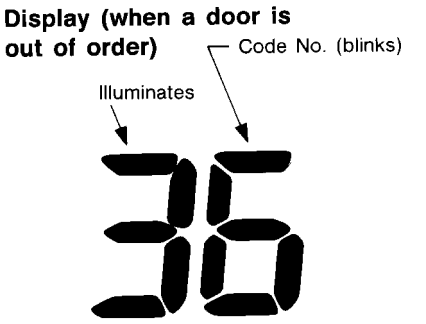

RHA168DA

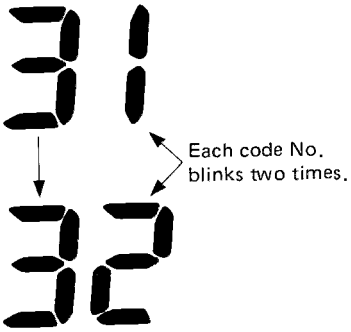

RHA498A

▶	INSPECTION END

AUXILIARY MECHANISM: TEMPERATURE SETTING TRIMMER

=NCHA0021S03

The trimmer compensates for differences in range of ±3°C (±6°F) between temperature setting (displayed digitally) and temperature felt by driver.
Operating procedures for this trimmer are as follows:

- Begin Self-diagnosis STEP 5 mode.
- Press (fan) UP switch to set system in auxiliary mode.
- Display shows "61" in auxiliary mechanism.
  It takes approximately 3 seconds.
- Press either (HOT) or (COLD) switch as desired. Temperature will change at a rate of 0.5°C (1.0°F) each time a switch is pressed.

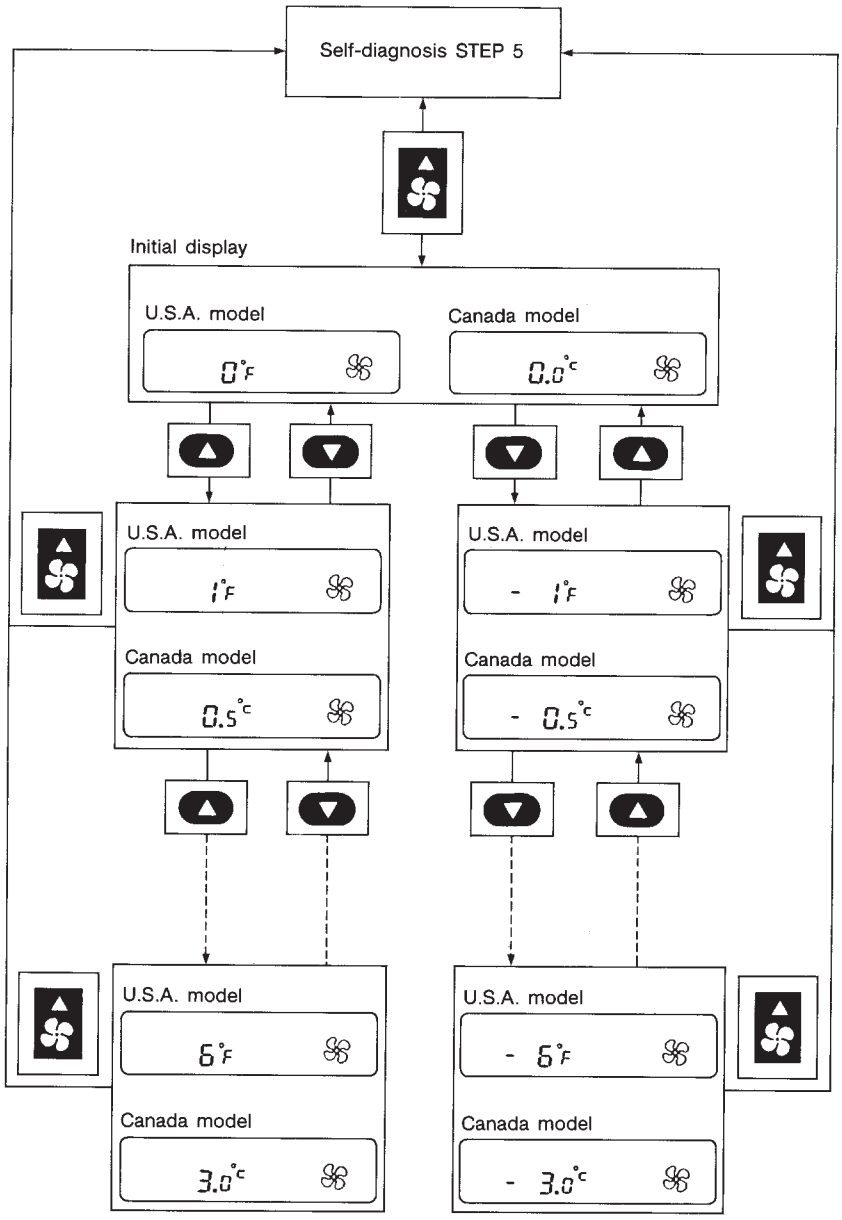

SHA197E

When battery cable is disconnected, trimmer operation is canceled. Temperature set becomes that of initial condition, i.e. 0°C (0°F).

How to Perform Trouble Diagnoses for Quick and Accurate Repair

=NCHA0018

WORK FLOW

NCHA0018S01

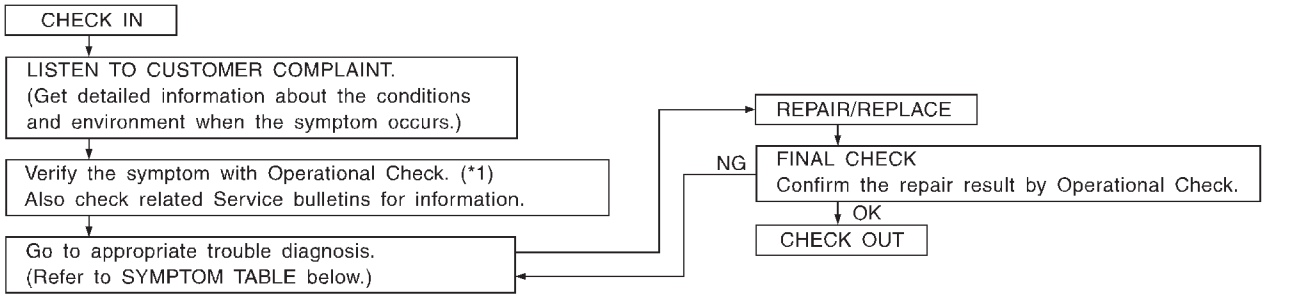

SHA900E

*1: Operational Check (HA-42)

SYMPTOM TABLE

NCHA0018S02

Symptom	Reference Page	
• A/C system does not come on.	• Go to Trouble Diagnosis Procedure for A/C system.	HA-45
• Air outlet does not change. • Mode door motor does not operate normally.	• Go to Trouble Diagnosis Procedure for Mode Door Motor. (LAN)	HA-48
• Discharge air temperature does not change. • Air mix door motor does not operate normally.	• Go to Trouble Diagnosis Procedure for Air Mix Door Motor. (LAN)	HA-54
• Intake door does not change. • Intake door motor does not operate normally.	• Go to Trouble Diagnosis Procedure for Intake Door Motor.	HA-58
• Blower motor operation is malfunctioning. • Blower motor operation is malfunctioning under out of starting fan speed control.	• Go to Trouble Diagnosis Procedure for Blower Motor.	HA-65
• Magnet clutch does not engage.	• Go to Trouble Diagnosis Procedure for Magnet Clutch.	HA-73
• Insufficient cooling.	• Go to Trouble Diagnosis Procedure for Insufficient Cooling.	HA-80
• Insufficient heating.	• Go to Trouble Diagnosis Procedure for Insufficient Heating.	HA-88
• Noise.	• Go to Trouble Diagnosis Procedure for Noise.	HA-89
• Self-diagnosis can not be performed.	• Go to Trouble Diagnosis Procedure for Self-diagnosis.	HA-90
• Memory function does not operate.	• Go to Trouble Diagnosis Procedure for Memory Function.	HA-91
• ECON mode does not operate.	• Go to Trouble Diagnosis Procedure for ECON (ECONOMY) — mode.	HA-92

Operational Check

NCHA0019

The purpose of the operational check is to confirm that the system operates properly.

CONDITIONS:

NCHA0019S01

- **Engine running and at normal operating temperature.**

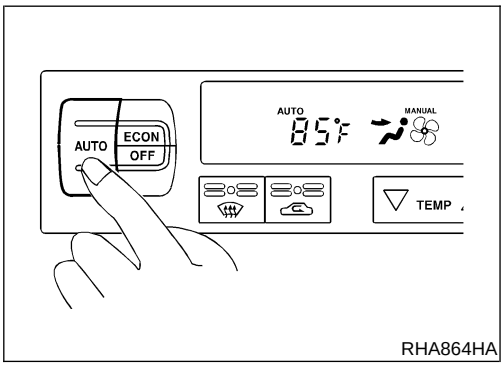

RHA864HA

PROCEDURE:

NCHA0019S02

1. Check Memory Function

NCHA0019S0201

1. Set the temperature 85°F or 32°C.
2. Press OFF switch.
3. Turn the ignition switch OFF.
4. Turn the ignition switch ON.
5. Press the AUTO switch.
6. Confirm that the set temperature remains at previous temperature.
7. Press OFF switch.

If NG, go to trouble diagnosis procedure for memory function (HA-91).
If OK, continue with next check.

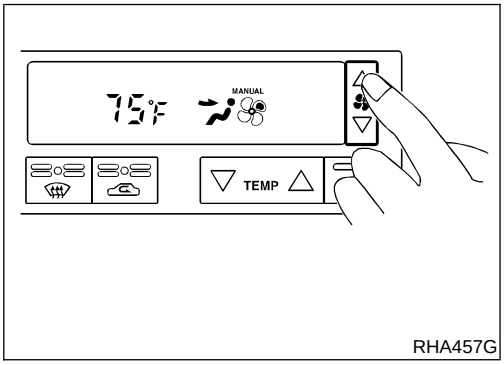

RHA457G

2. Check Blower

NCHA0019S0202

1. Press fan switch (up side) one time.
   Blower should operate on low speed.
   The fan symbol should have one blade lit .
2. Press fan switch (up side) one more time, and continue checking blower speed and fan symbol until all speeds are checked.
3. Leave blower on MAX speed .

If NG, go to trouble diagnosis procedure for blower motor (HA-65).
If OK, continue with next check.

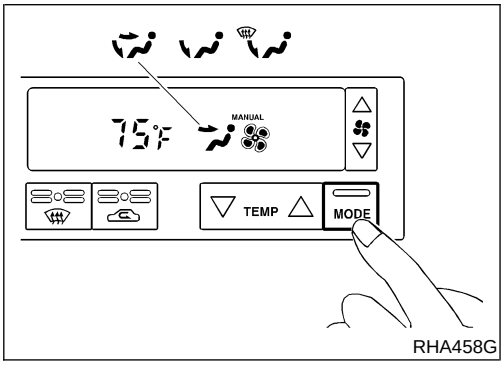

RHA458G

3. Check Discharge Air

NCHA0019S0203

1. Press mode switch four times and DEF button.
2. Each position indicator should change shape.

Discharge air flow

Mode control knob	Air outlet/distribution		
	Face	Foot	Defroster
	100%	–	–
	60%	40%	–
	–	80%	20%
	–	60%	40%
	–	–	100%

RHA654F

3. Confirm that discharge air comes out according to the air distribution table at left.
   Refer to "Discharge Air Flow" (HA-21).

Intake door position is checked in the next step.
If NG, go to trouble diagnosis procedure for mode door motor (HA-48).
If OK, continue with next check.

NOTE:
Confirm that the compressor clutch is engaged (visual inspection) and intake door position is at FRESH when the DEF is selected.

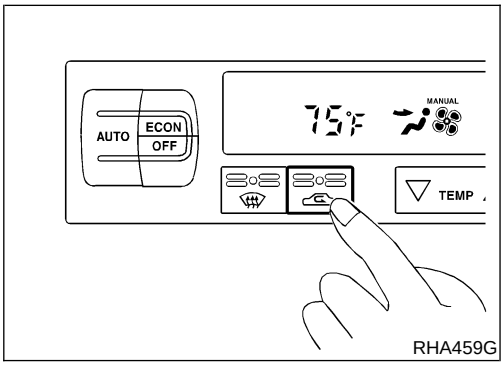

RHA459G

4. Check Recirculation

NCHA0019S0204

1. Press REC switch.
   Recirculation indicator should illuminate.
2. Listen for intake door position change (you should hear blower sound change slightly).

If NG, go to trouble diagnosis procedure for intake door (HA-58).
If OK, continue with next check.

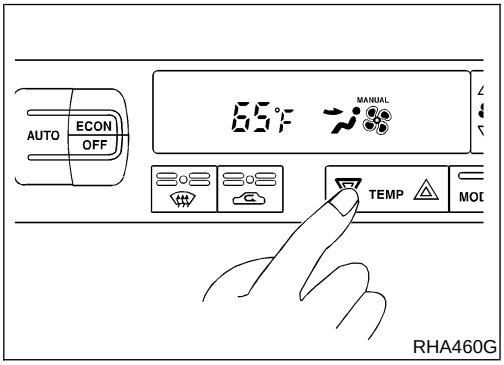

RHA460G

5. Check Temperature Decrease

NCHA0019S0205

1. Press the temperature decrease button until 18°C (65°F) is displayed.
2. Check for cold air at discharge air outlets.

If NG, go to trouble diagnosis procedure for insufficient cooling (HA-80).
If OK, continue with next check.

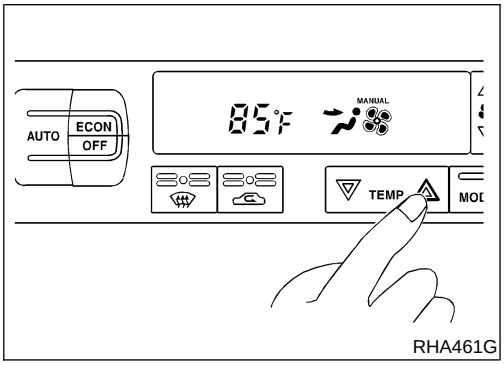

RHA461G

6. Check Temperature Increase

NCHA0019S0206

1. Press the temperature increase button until 32°C (85°F) is displayed.
2. Check for hot air at discharge air outlets.

If NG, go to trouble diagnosis procedure for insufficient heating (HA-88).
If OK, continue with next check.

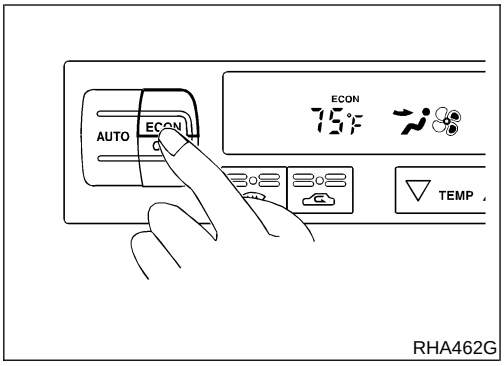

RHA462G

7. Check ECON (Economy) Mode

NCHA0019S0207

1. Set the temperature 75°F or 25°C.
2. Press ECON switch.
3. Display should indicate ECON (no AUTO).
   Confirm that the compressor clutch is not engaged (visual inspection).
   (Discharge air and blower speed will depend on ambient, in-vehicle, and set temperatures.)

If NG, go to trouble diagnosis procedure for ECON (Economy) mode (HA-92).
If OK, continue with next check.

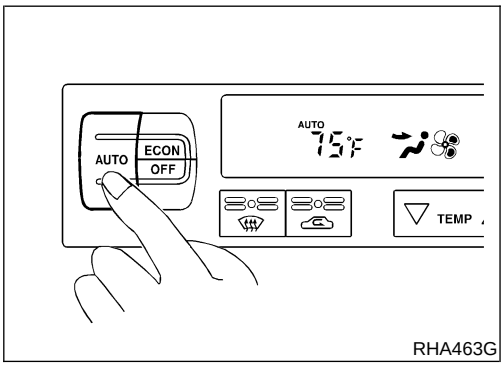

RHA463G

8. Check AUTO Mode

NCHA0019S0208

1. Press AUTO switch.
2. Display should indicate AUTO (no ECON).
   Confirm that the compressor clutch engages (audio or visual inspection).
   (Discharge air and blower speed will depend on ambient, in-vehicle, and set temperatures.)

If NG, go to trouble diagnosis procedure for A/C system (HA-45), then if necessary, trouble diagnosis procedure for magnet clutch (HA-73).

If all operational check are OK (symptom can not be duplicated), go to "Incident Simulation Tests" (GI section) and perform tests as outlined to simulate driving conditions environment. If symptom appears, refer to "Symptom Table" (HA-41) and perform applicable trouble diagnosis procedures.

A/C System

TROUBLE DIAGNOSIS PROCEDURE FOR A/C SYSTEM

=NCHA0089

SYMPTOM:

- **A/C system does not come on.**

INSPECTION FLOW

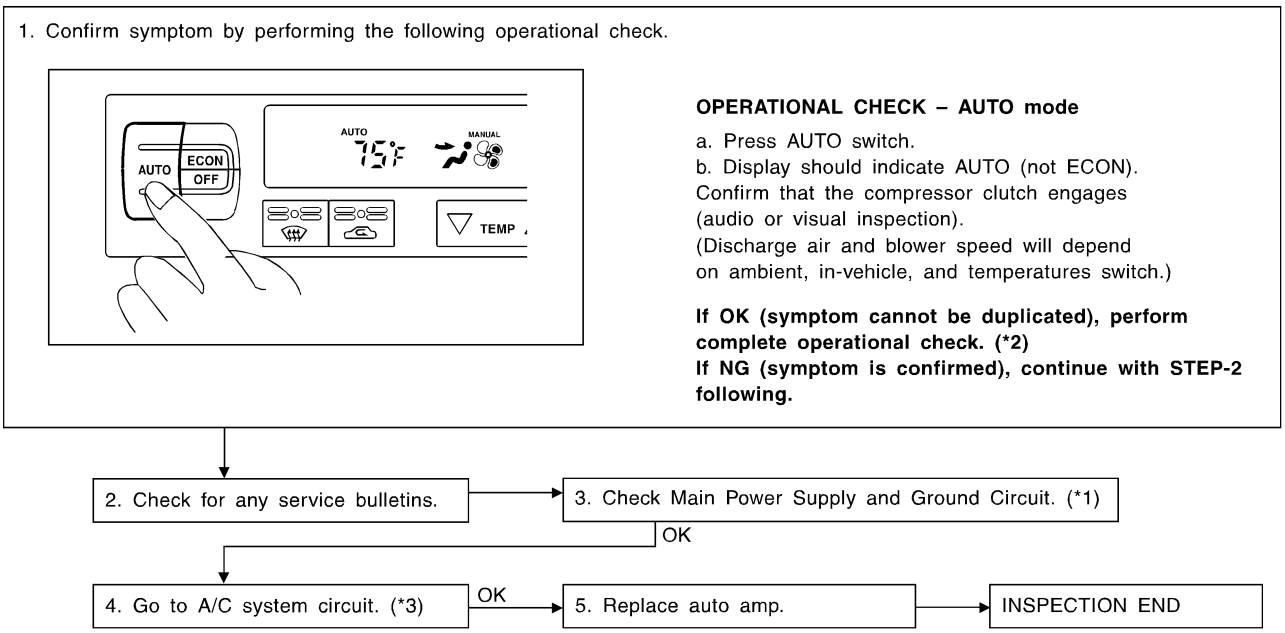

SHA348F

*1: HA-45 *2: HA-42 *3: HA-46

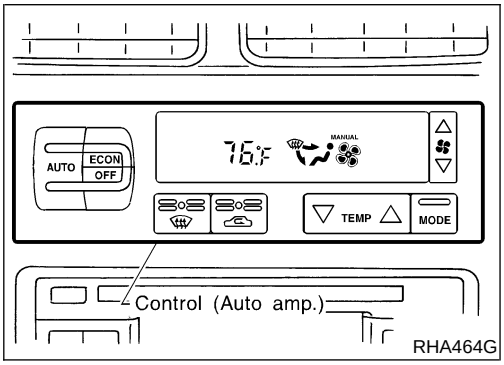

RHA464G

COMPONENT DESCRIPTION

NCHA0037

Automatic Amplifier (Auto Amp.)

NCHA0037S01

The auto amplifier has a built-in microcomputer which processes information sent from various sensors needed for air conditioner operation. The mode door motor, air mix door motor, intake door motor, blower motor and compressor are then controlled.

The auto amplifier is unitized with control mechanisms. Signals from various switches and Potentio Temperature Control (PTC) are directly entered into auto amplifier.

Self-diagnostic functions are also built into auto amplifier to provide quick check of malfunctions in the auto air conditioner system.

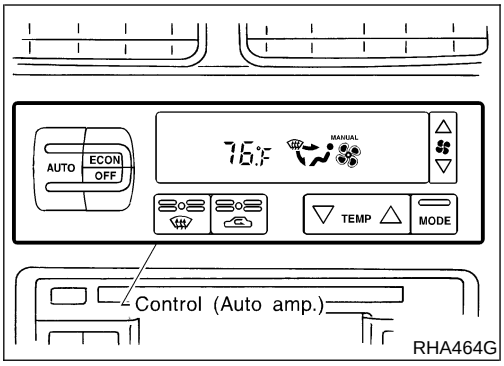

Potentio Temperature Control (PTC)

NCHA0037S03

The PTC is built into the A/C auto amp. It can be set at an interval of 0.5°C (1.0°F) in the 18°C (65°F) to 32°C (85°F) temperature range by pushing the temperature button. The set temperature is digitally displayed.

MAIN POWER SUPPLY AND GROUND CIRCUIT CHECK

NCHA0182

Power Supply Circuit Check

NCHA0182S01

Check power supply circuit for air conditioner system. Refer to EL-10, "Wiring Diagram — POWER —".

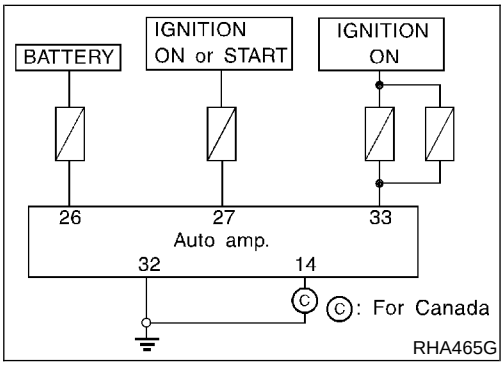

DIAGNOSTIC PROCEDURE

NCHA0107

SYMPTOM:

- **A/C system does not come on.**

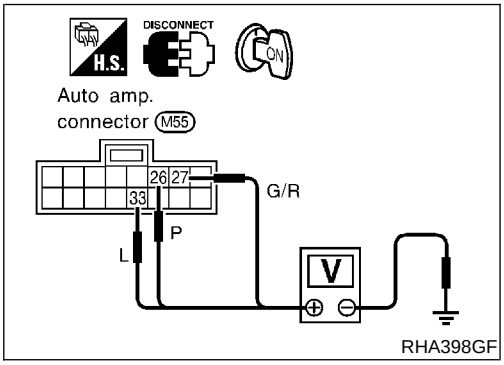

Auto Amp. Check

NCHA0107S01

Check power supply circuit for auto amp. with ignition switch ON. Measure voltage across terminal Nos. 26, 27, 33 and body ground.

Voltmeter terminal		Voltage
(+)	(−)	
26	Body ground	Approx. 12V
27		
33		

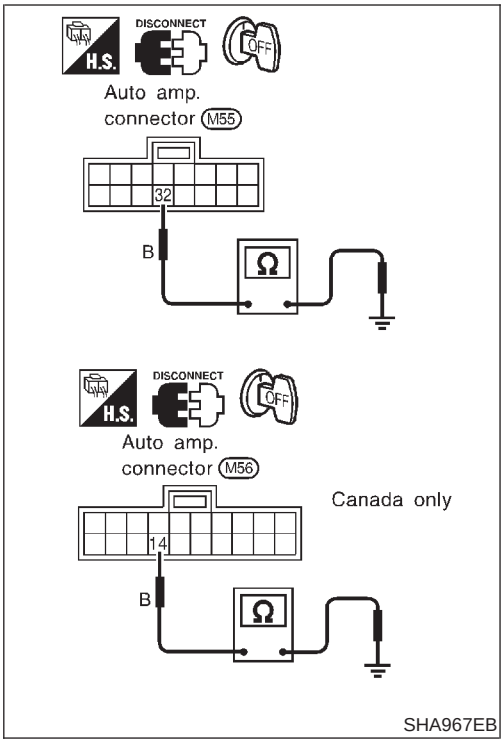

Check body ground circuit for auto amp. with ignition switch OFF. Check for continuity between terminal Nos. 32, 14 and body ground.

Ohmmeter terminal		Continuity
(+)	(−)	
32	Body ground	Yes
14 (Canada only)		

If OK, check auto amp. ground circuit, see below.
If NG, repair or replace harness. Check 7.5A fuse (No. 5), 10A fuse (No. 8) (located in the fuse block) and 15A fuses (Nos. 1 and 2, located in the fuse block).

- If fuses are OK, check for open circuit in wiring harness. Repair or replace as necessary.
- If fuses are NG, replace fuse and check wiring harness for short circuit. Repair or replace as necessary.

NOTE:
If OK, replace auto amp.

Mode Door Motor

TROUBLE DIAGNOSIS PROCEDURE FOR MODE DOOR MOTOR (LAN)

=NCHA0090

SYMPTOM:

- **Air outlet does not change.**
- **Mode door motor does not operate normally.**

INSPECTION FLOW

1. Confirm symptom by performing the following operational check.

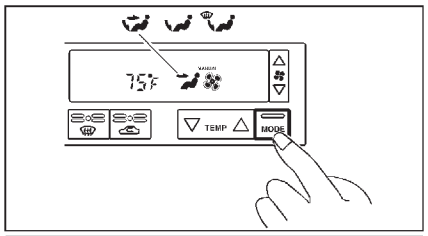

OPERATIONAL CHECK – Discharge air

a. Press mode switch four times and DEF button.
b. Each position indicator should change shape.

Discharge air flow

Mode switch	Air outlet/distribution		
	Face	Foot	Defroster
	100%	–	–
	60%	40%	–
	–	80%	20%
	–	60%	40%
	–	–	100%

c. Confirm that discharge air comes out according to the air distribution table at left.
Refer to "Discharge Air Flow" (*1).

NOTE:

- **If OK (symptom cannot be duplicated), perform complete operational check (*2).**
  If NG (symptom is confirmed), continue with STEP-2 following.
- **Confirm that the compressor clutch is engaged (visual inspection) and intake door position is at FRESH when DEF is selected.**
  Intake door position is checked in the next step.

2. Check for any service bulletins. → 3. Perform self-diagnosis STEP-1. (*3)
3. Perform self-diagnosis STEP-1. (*3) — OK → 4. Perform self-diagnosis STEP-2. (*15); NG → Go to appropriate malfunctioning sensor circuit. (*9)
4. Perform self-diagnosis STEP-2. (*15) — OK ↓; NG → Go to appropriate malfunctioning sensor circuit. (*9)
5. Perform self-diagnosis STEP-3. (*16) — NG → Go to DIAGNOSTIC PROCEDURE FOR MODE DOOR MOTOR AND AIR MIX DOOR MOTOR CIRCUIT. (*10); OK ↓
6. Perform self-diagnosis STEP-4. (*4) — NG → Check mode door control linkage. (*11) — NG → Repair or adjust control linkage.; OK ↓ **[Cause cannot be confirmed by self-diagnosis.]**
7. Check ambient sensor circuit. (*5) — OK ↓
8. Check in-vehicle sensor circuit. (*6) — OK ↓
9. Check sunload sensor circuit. (*7) — OK ↓
10. Check intake sensor circuit. (*14) — OK ↓
11. Check air mix door motor PBR circuit. (*8) — OK → If the symptom still exists, perform a complete operational check (*12) and check for other symptoms. [Refer to symptom table, (*13).] Does another symptom exist?
   - Yes → Go to Trouble Diagnosis for related symptoms. **[Another symptom exists.]**
   - No → Replace auto amp. → No → INSPECTION END

SHA173F

*1: HA-21
*2: HA-42
*3: HA-32
*4: STEP-BY-STEP PROCEDURE (HA-32), see No. 7.
*5: HA-92
*6: HA-95
*7: HA-99
*8: HA-104
*9: STEP-BY-STEP PROCEDURE (HA-32), see No. 12.
*10: HA-50
*11: HA-53
*12: HA-42
*13: HA-41
*14: HA-102
*15: HA-32
*16: HA-32

SYSTEM DESCRIPTION

=NCHA0052

Component Parts

NCHA0052S01

Mode door control system components are:

1) Auto amp.
2) Mode door motor (LCU)
3) In-vehicle sensor
4) Ambient sensor
5) Sunload sensor
6) Intake sensor

System Operation

NCHA0052S02

The auto amplifier receives data from each of the sensors. The amplifier sends air mix door and mode door opening angle data to the air mix door motor LCU and mode door motor LCU.
The mode door motor and air mix door motor read their respective signals according to the address signal. Opening angle indication signals received from the auto amplifier and each of the motor position sensors are compared by the LCUs in each motor with the existing decision and opening angles. Subsequently, HOT/COLD or DEFROST/VENT operation is selected. The new selection data is returned to the auto amplifier.

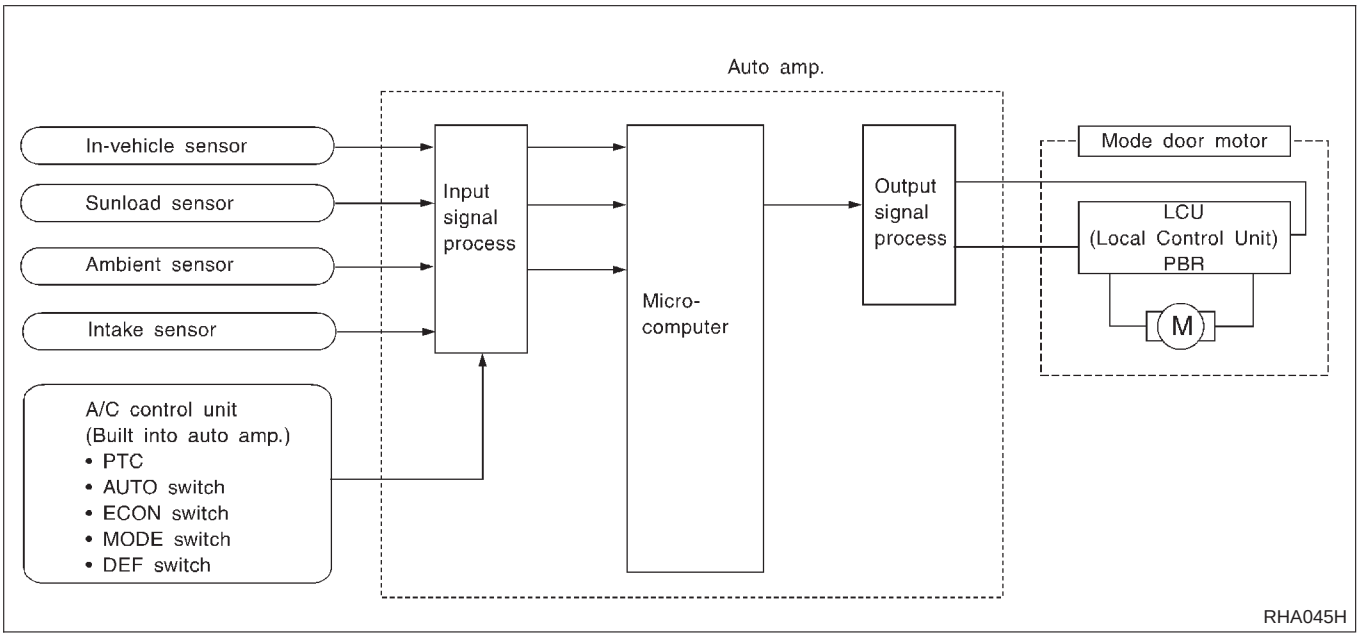

Mode Door Control Specification

NCHA0052S03

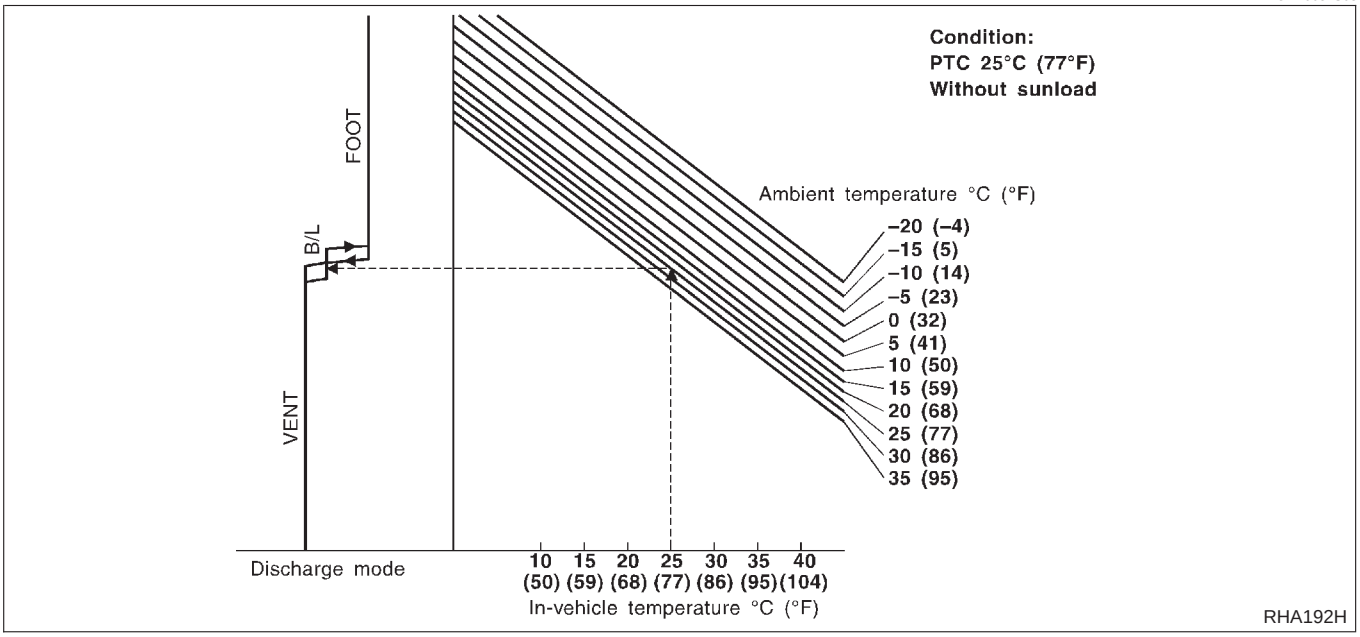

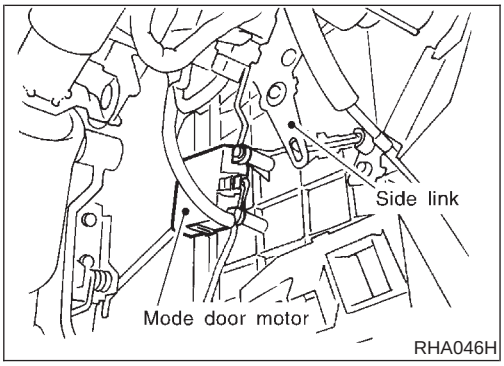

COMPONENT DESCRIPTION

NCHA0053

The mode door motor is attached to the heater unit. It rotates so that air is discharged from the outlet set by the auto amplifier. Motor rotation is conveyed to a link which activates the mode door.

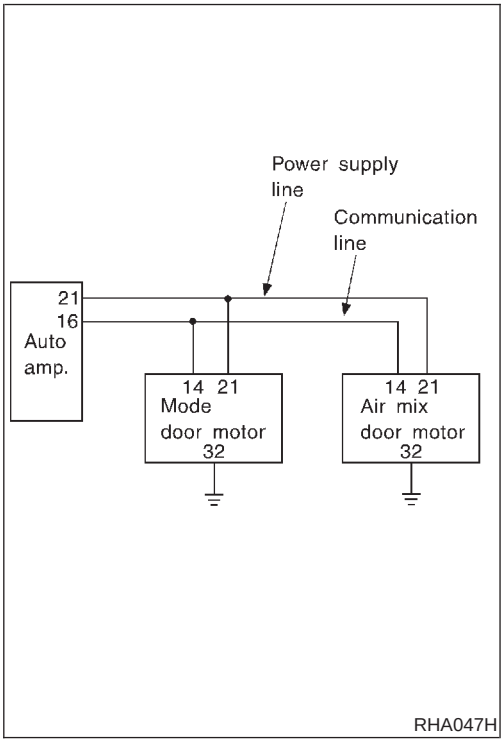

DIAGNOSTIC PROCEDURE FOR MODE DOOR MOTOR AND AIR MIX DOOR MOTOR CIRCUIT

NCHA0104

SYMPTOM: Mode door motor and/or air mix door motor does not operate normally.

1	CHECK POWER SUPPLY FOR AUTO AMP. (LCU) SIDE

Do approx. 12 volts exist between auto amp. (LCU) harness terminal No. 21 and body ground?

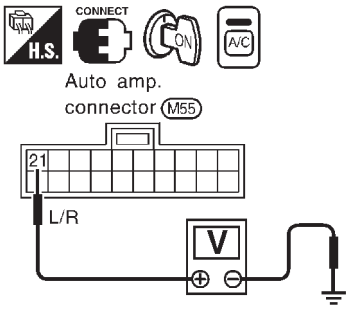

SHA966EB

NOTE:
If the result is NG or No after checking circuit continuity, repair harness or connector.

Yes or No

Yes	▶	GO TO 2.
No	▶	Replace auto amp. (LCU).

2	CHECK SIGNAL FOR AUTO AMP. (LCU) SIDE

Do approx. 5.5 volts exist between auto amp. (LCU) terminal No. 16 and body ground?

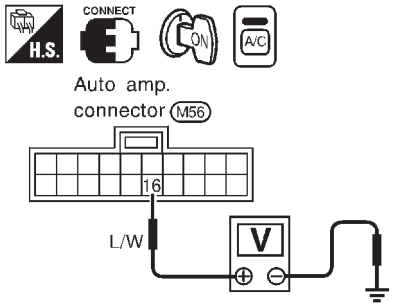

SHA965EB

NOTE:
If the result is NG or No after checking circuit continuity, repair harness or connector.

Yes or No

Yes	▶	GO TO 3.
No	▶	Replace auto amp. (LCU).

3	CHECK POWER SUPPLY FOR MOTOR SIDE

Do approx. 12 volts exist between door motor (LCU) harness terminal No. 21 and body ground?

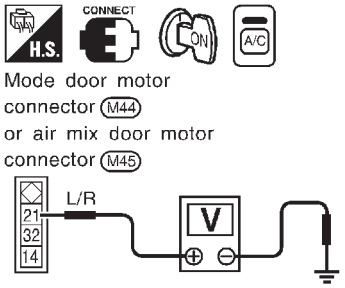

SHA172F

Yes or No

Yes	▶	GO TO 4.
No	▶	Repair harness or connector.

4	CHECK SIGNAL FOR MOTOR SIDE

Do approx. 5.5 volts exist between door motor (LCU) terminal No. 14 and body ground?

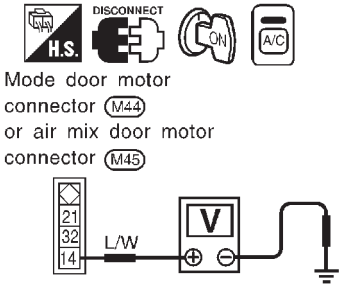

RHA048H

Yes or No

Yes	▶	GO TO 5.
No	▶	Repair harness or connector.

5	CHECK MOTOR GROUND CIRCUIT

Does continuity exist between door motor (LCU) harness terminal No. 32 and body ground?

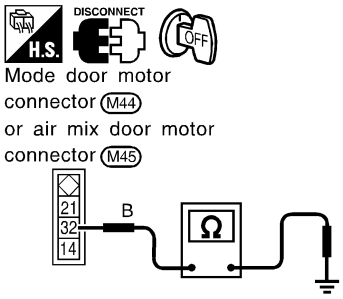

RHA581H

Yes or No

Yes	▶	GO TO 6.
No	▶	Repair harness or connector.

6	CHECK MOTOR OPERATION

Disconnect and reconnect the motor connector and confirm the motor operation.

OK or NG

OK (Return to operate normally)	▶	Poor contacting the motor connector
NG (Does not operate normally)	▶	GO TO 7.

7	CHECK MODE DOOR MOTOR OPERATION

1. Disconnect the mode door motor and air mix door motor connector.
2. Reconnect the mode door motor and confirm the motor operation.

OK or NG

OK (Mode door motor operates normally)	▶	Replace the air mix door motor.
NG (Mode door motor does not operate normally)	▶	GO TO 8.

8	CHECK AIR MIX DOOR MOTOR OPERATION
1. Disconnect the mode door motor connector. 2. Reconnect the air mix door motor and confirm the air mix door motor operation.	
OK or NG	
OK (Air mix door motor operates normally) ▶	Replace mode door motor.
NG (Air mix door motor does not operate normally) ▶	Replace auto amp.

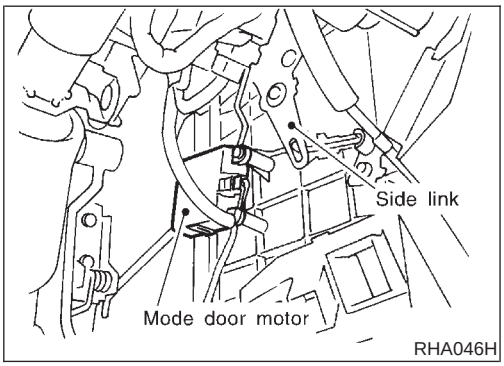

CONTROL LINKAGE ADJUSTMENT

NCHA0091

Mode Door

NCHA0091S01

1. Install mode door motor on heater unit and connect it to main harness.
2. Set up code No. in Self-diagnosis STEP 4. Refer to HA-32.
3. Move side link by hand and hold mode door in DEF mode.
4. Attach mode door motor rod to side link rod holder.
5. Make sure mode door operates properly when changing from code No. 41 to 46 by pushing DEF switch.

41	42	43	44	45	46
VENT	B/L	B/L	FOOT	D/F	DEF

Air Mix Door Motor

TROUBLE DIAGNOSIS PROCEDURE FOR AIR MIX DOOR (LAN)

=NCHA0098

SYMPTOM:

- **Discharge air temperature does not change.**
- **Air mix door motor does not operate.**

INSPECTION FLOW

1. Confirm symptom by performing the following operational check.

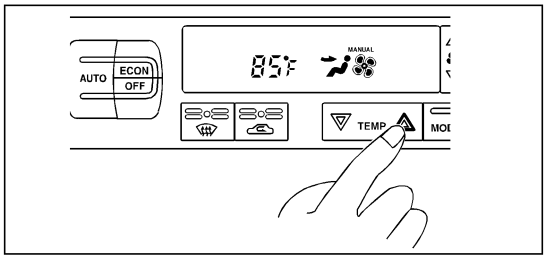

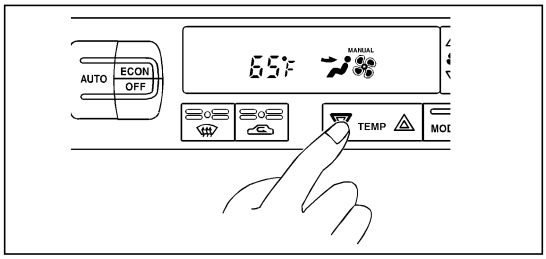

OPERATIONAL CHECK

Temperature increase

a. Press the temperature increase button until 32°C (85°F) is displayed.
b. Check for hot air at discharge air outlets.

Temperature decrease

a. Press the temperature decrease button until 18°C (65°F) is displayed.
b. Check for cold air at discharge air outlets.

If OK (symptom cannot be duplicated), perform complete operational check (*10).
If NG (symptom is confirmed), continue with STEP-2 following.

2. Check for any service bulletins. → 3. Perform self-diagnosis STEP-1. (*1)

OK

4. Perform self-diagnosis STEP-2. (*9) → NG → Go to appropriate malfunctioning sensor circuit. (*6)

OK

5. Perform self-diagnosis STEP-4. (*13) → NG → Check air mix door control linkage. (*8) → NG → Repair or adjust control linkage. (*8) → OK → Go to DIAGNOSTIC PROCEDURE FOR MODE DOOR MOTOR AND AIR MIX DOOR MOTOR CIRCUIT. (*7)

OK*

6. Check ambient sensor circuit. (*2)

OK

7. Check in-vehicle sensor circuit. (*3)

OK

8. Check sunload sensor circuit. (*4)

OK

9. Check intake sensor circuit. (*12)

OK

10. Check air mix door motor PBR circuit. (*5)

OK

If the symptom still exists, perform a complete operational check (*10) and check for other symptoms. [Refer to symptom table, (*11).] Does another symptom exist? → Yes → Go to Trouble Diagnosis for related symptom.

Another symptom exists.

No

Replace auto amp. → INSPECTION END

***Cause cannot be confirmed by self-diagnosis.**

SHA174FA

*1: HA-32
*2: HA-92
*3: HA-95
*4: HA-99
*5: HA-104
*6: STEP-BY-STEP PROCEDURE (HA-32), see No. 12.
*7: HA-50
*8: HA-56
*9: HA-32
*10: HA-42
*11: HA-41
*12: HA-102
*13: HA-32

SYSTEM DESCRIPTION

=NCHA0059

Component Parts

NCHA0059S01

Air mix door control system components are:

1) Auto amp.
2) Air mix door motor (LCU)
3) In-vehicle sensor
4) Ambient sensor
5) Sunload sensor
6) Intake sensor

System Operation

NCHA0059S02

The auto amplifier receives data from each of the sensors. The amplifier sends air mix door and mode door opening angle data to the air mix door motor LCU and mode door motor LCU.
The air mix door motor and mode door motor read their respective signals according to the address signal. Opening angle indication signals received from the auto amplifier and each of the motor position sensors are compared by the LCUs in each motor with the existing decision and opening angles. Subsequently, HOT/COLD or DEFROST/VENT operation is selected. The new selection data is returned to the auto amplifier.

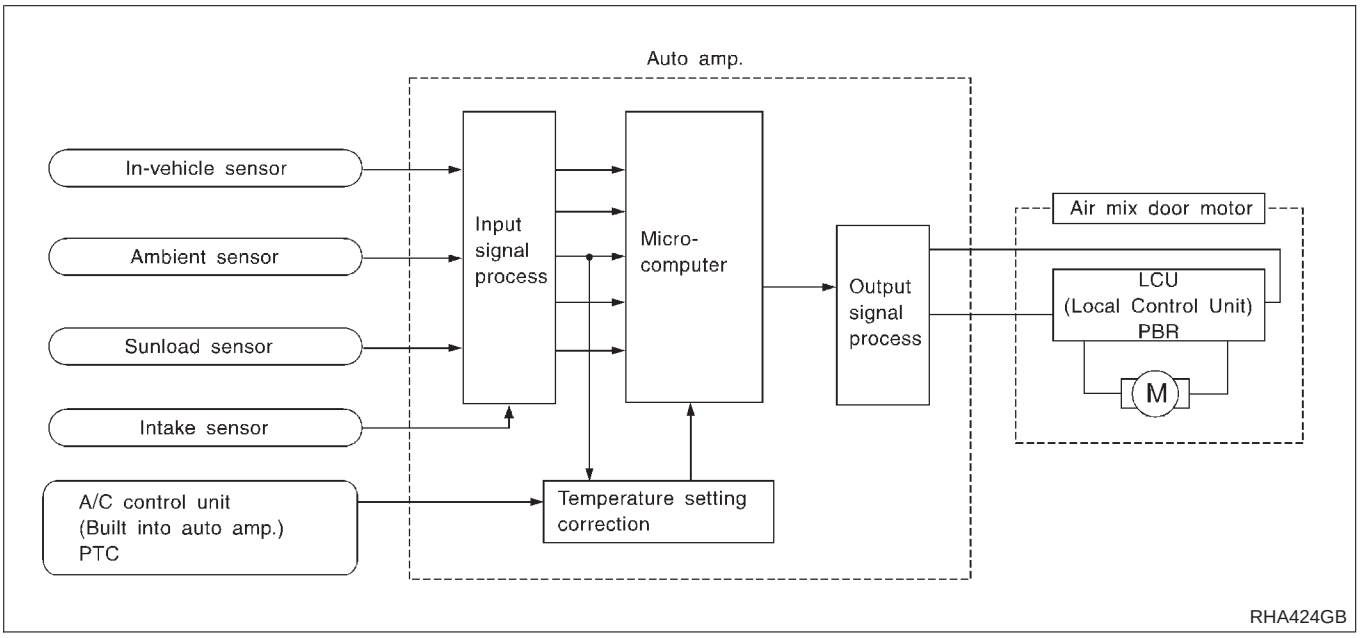

Air Mix Door Control Specification

NCHA0059S03

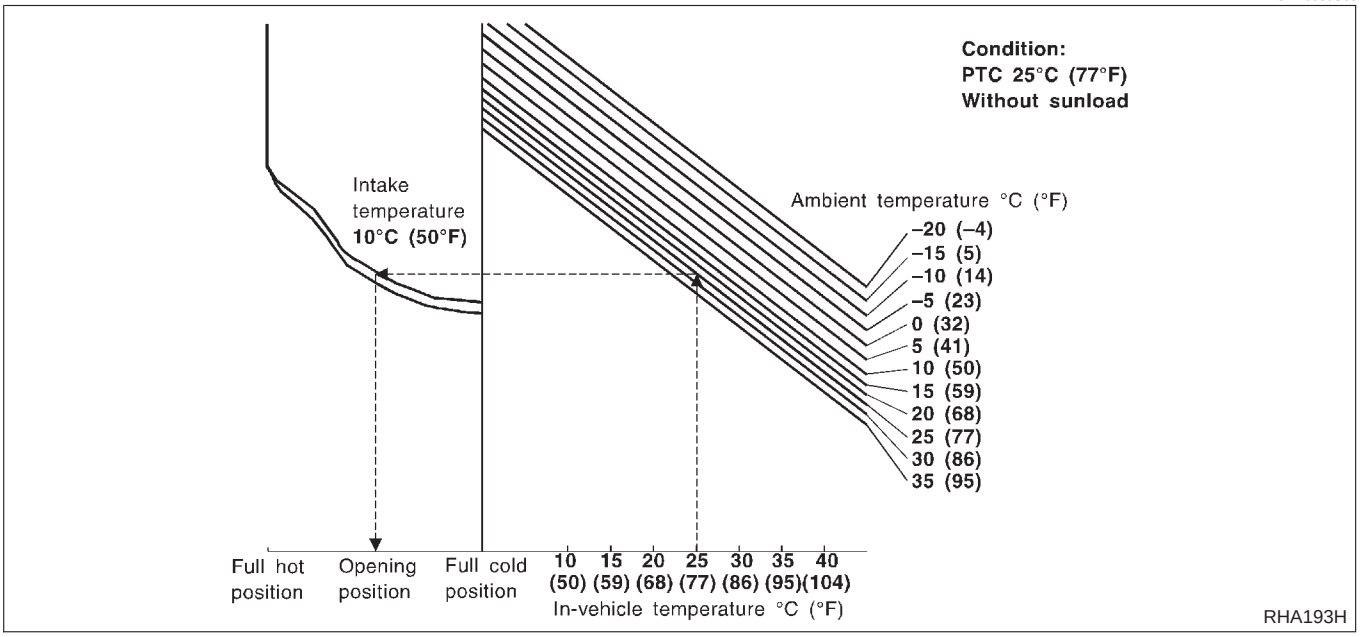

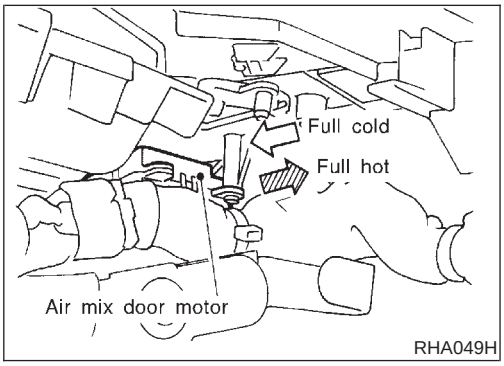

COMPONENT DESCRIPTION

NCHA0060

The air mix door motor is attached to the heater unit. It rotates so that the air mix door is opened or closed to a position set by the auto amplifier. Motor rotation is then conveyed through a shaft and the air mix door position is then fed back to the auto amplifier by PBR built-in air mix door motor.

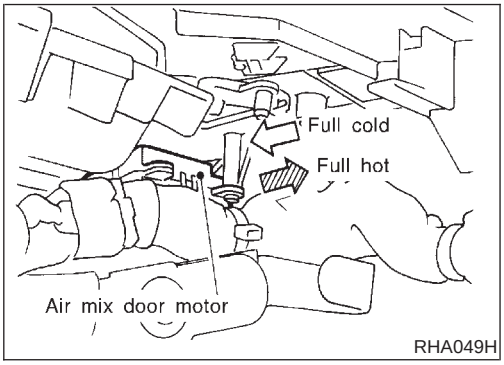

CONTROL LINKAGE ADJUSTMENT

NCHA0099

Air Mix Door (Water Cock)

NCHA0099S01

1. Install air mix door motor on heater unit and connect it to main harness.
2. Set up code No. 41 in Self-diagnosis STEP 4. Refer to HA-32.
3. Move air mix door lever by hand and hold it in full cold position.
4. Attach air mix door lever to rod holder.
5. Make sure air mix door operates properly when changing from code No. 41 to 46 by pushing DEF switch.

41	42	43	44	45	46
Full cold		Full hot			

6. Set up code No. 41 in Self-diagnosis STEP 4.
7. Attach water cock rod to air mix door lever and secure with clip.
8. Rotate air mix door lever (CLOCKWISE completely) and hold water cock rod and link lever in the full cold position.
9. Attach water cock rod to link lever and secure with clip (white mark on cable housing should be centered under the retaining clip).

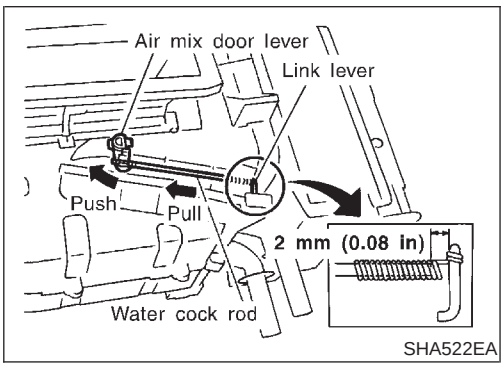

10. Check that water cock operates properly when changing from code No. 41 to 46 by pushing DEF switch. (After several cycles, water cock lever should be midpoint of plate opening when code No. 41 is set.)

Intake Door Motor

TROUBLE DIAGNOSIS PROCEDURE FOR INTAKE DOOR

=NCHA0092

SYMPTOM:

- **Intake door does not change.**
- **Intake door motor does not operate normally.**

INSPECTION FLOW

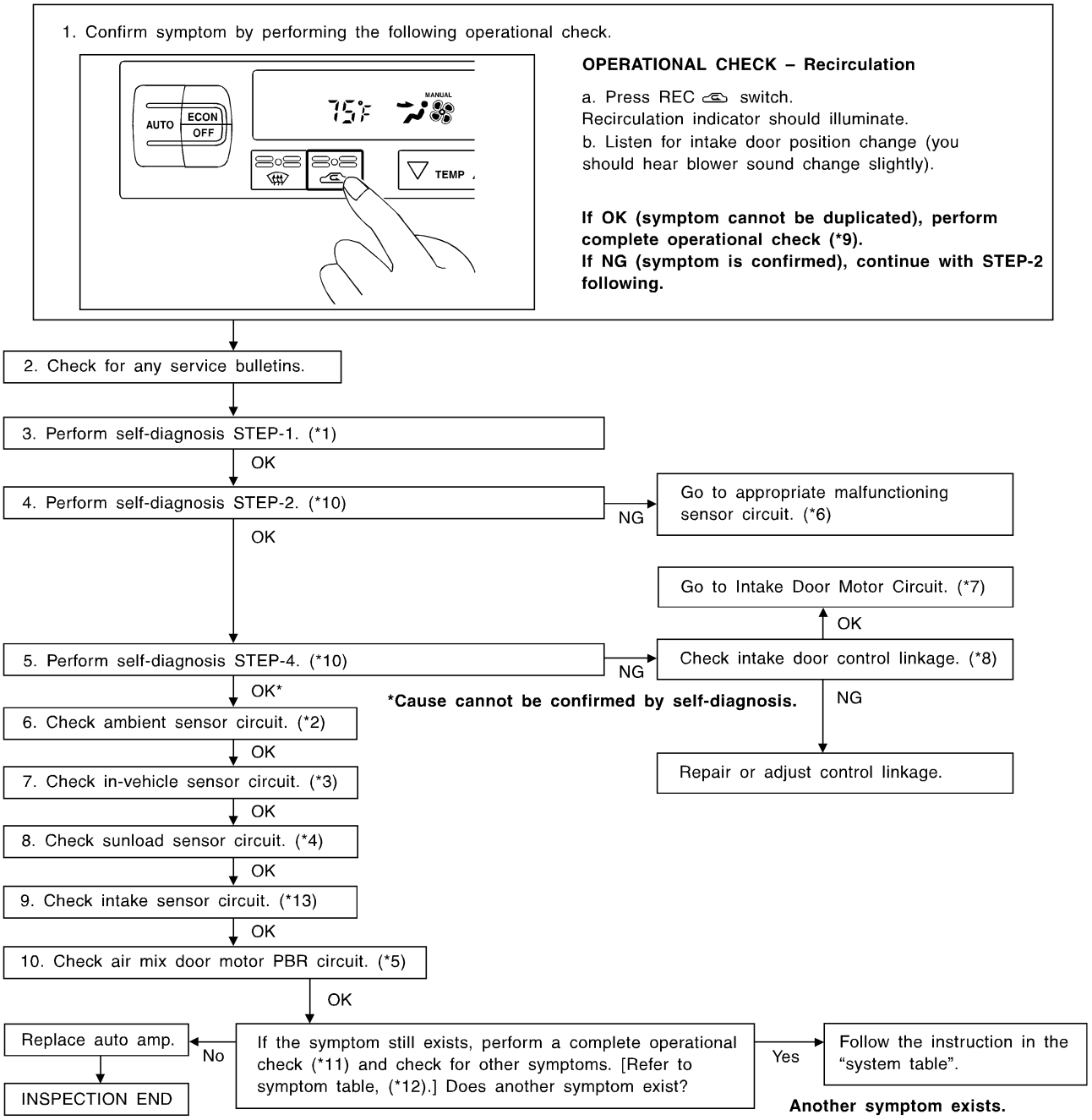

SHA175FA

*1: HA-32
*2: HA-92
*3: HA-95
*4: HA-99
*5: HA-104
*6: STEP-BY-STEP PROCEDURE (HA-32), see No. 12.
*7: HA-60
*8: HA-64
*9: HA-42
*10: HA-32
*11: HA-42
*12: HA-41
*13: HA-102

SYSTEM DESCRIPTION

=NCHA0056

Component Parts

NCHA0056S01

Intake door control system components are:

1) Auto amp.
2) Intake door motor
3) A/C LAN system (PBR built-in mode motor and air mix door motor)
4) In-vehicle sensor
5) Ambient sensor
6) Sunload sensor
7) Intake sensor

System Operation

NCHA0056S02

The intake door control determines intake door position based on the ambient temperature, the intake air temperature and the in-vehicle temperature. When the ECON, DEFROST, or OFF switches are pushed, the auto amplifier sets the intake door at the "Fresh" position.

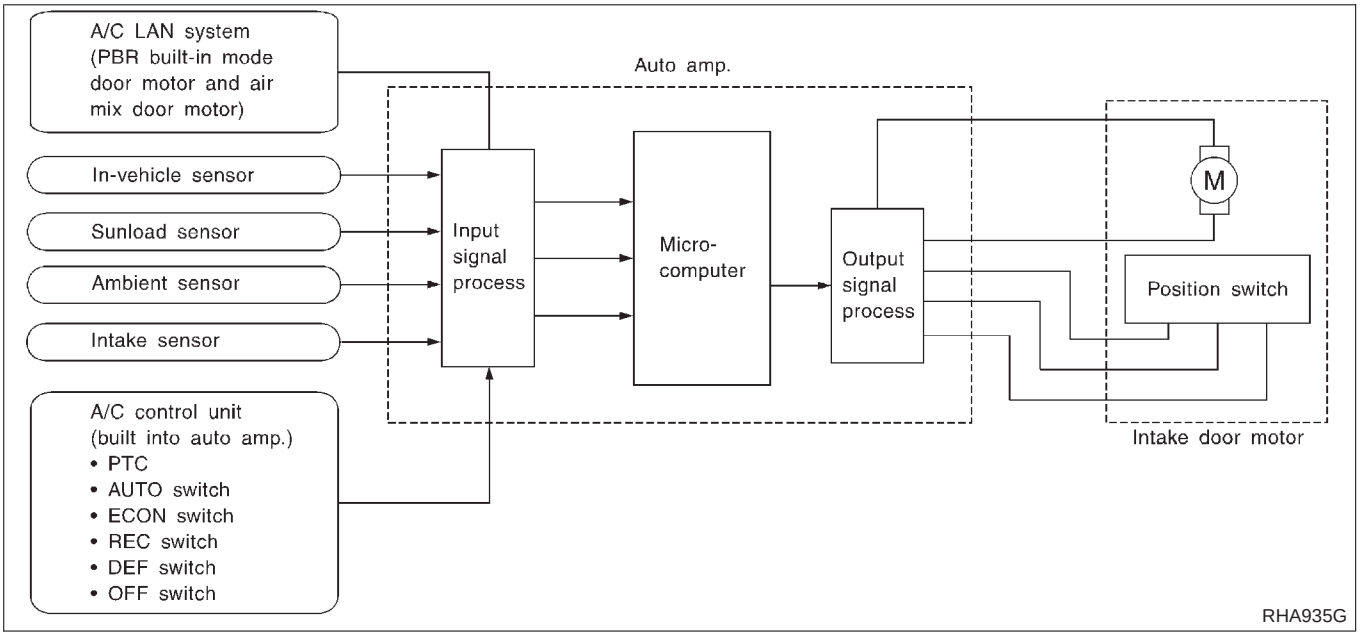

Intake Door Control Specification

NCHA0056S03

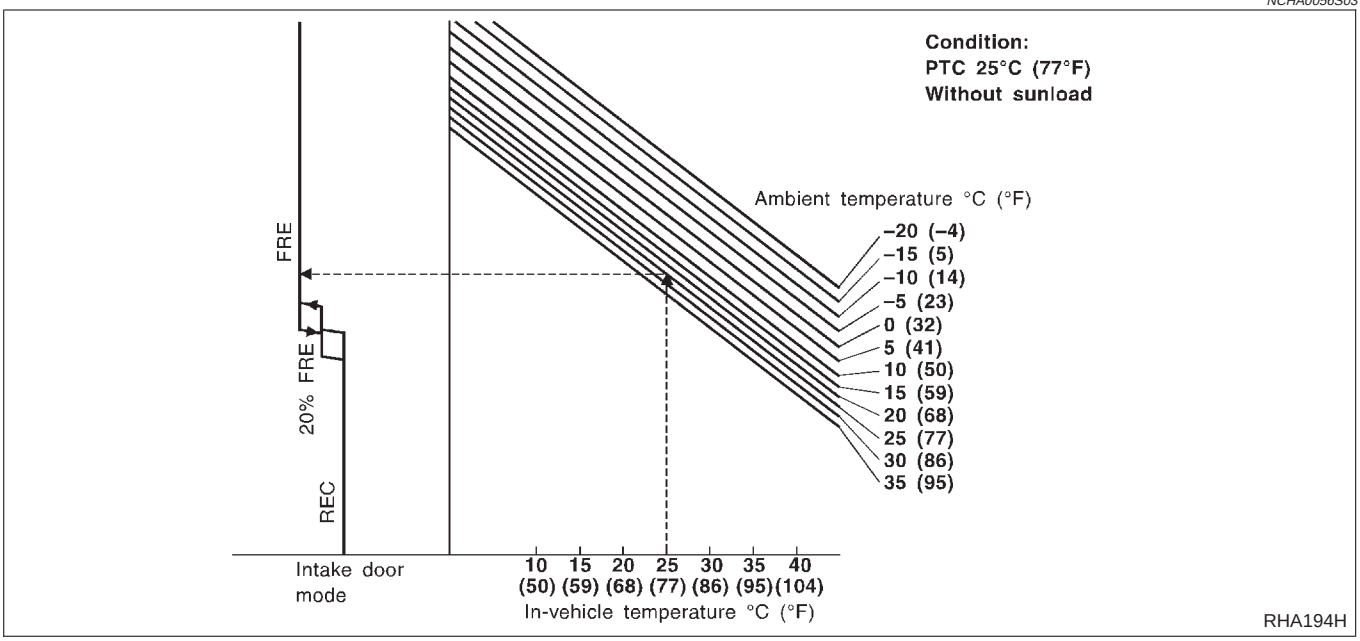

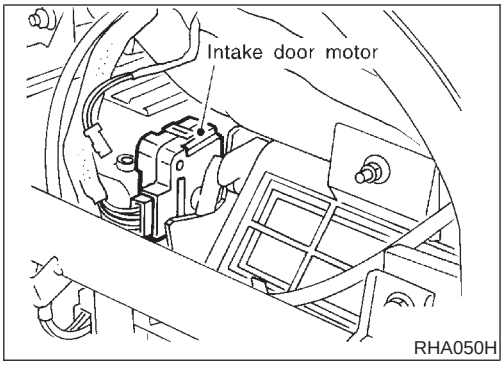

COMPONENT DESCRIPTION

NCHA0057

The intake door motor is attached to the intake unit. It rotates so that air is drawn from inlets set by the auto amplifier. Motor rotation is conveyed to a lever which activates the intake door.

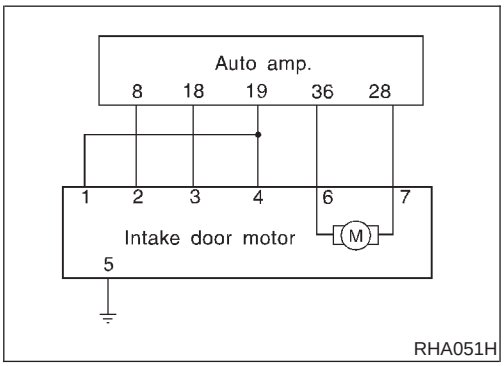

DIAGNOSTIC PROCEDURE

NCHA0058

SYMPTOM: Intake door motor does not operate normally.

- **Perform Self-diagnosis STEPS 1 before referring to the test group.**

1	CHECK BODY GROUND CIRCUIT FOR INTAKE DOOR MOTOR

Does continuity exist between intake door harness terminal No. 5 and body ground?

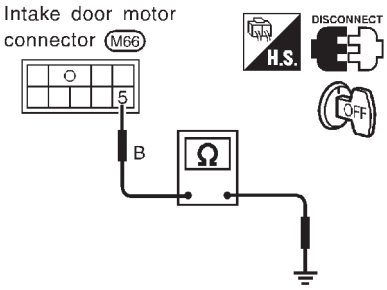

Yes or No

Yes	▶	GO TO 2.
No	▶	Repair harness or connector.

2	CHECK FOR AUTO AMP. OUTPUT

Set up Self-diagnosis STEP 4.
Measure voltage across auto amp. harness terminals and body ground.

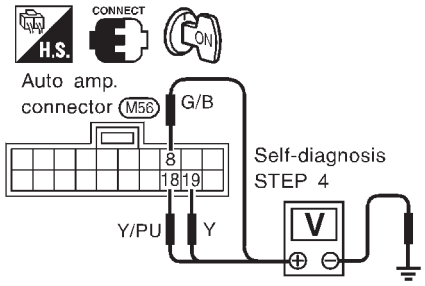

RHA493GB

Code No.	Terminals No. (+)	Terminals No. (–)	Condition	Voltage V
41	8	Body ground	REC	5
42	18 or 19			0
43	19		20% FRE	5
	8 or 18			0
44	18		FRE	5
45	8 or 19			0
46				

0V: Approx. 0V
5V: Approx. 5V

MTBL0076

OK or NG

OK	▶	INSPECTION END
NG	▶	GO TO 3.

3	CHECK CIRCUIT CONTINUITY BETWEEN EACH TERMINAL ON AUTO AMP. AND ON INTAKE DOOR MOTOR

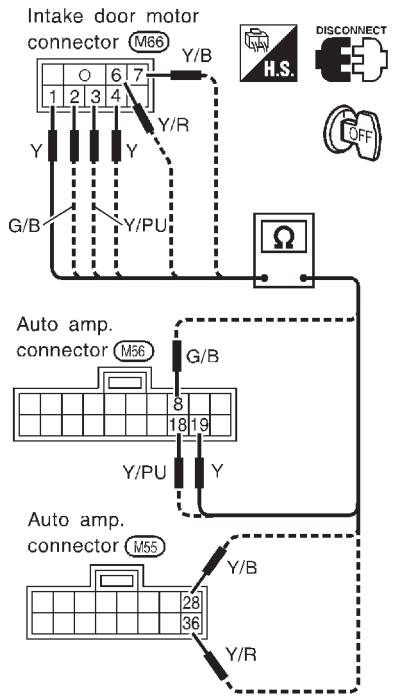

RHA053H

Terminal No.		Continuity
Auto amp.	Intake door motor	
(19)	4	Yes
(8)	2	
(18)	3	
(19)	1	
(28)	7	
(36)	6	

MTBL0377

Continuity should exist.
If OK, check harness for short.

OK or NG

OK	▶	GO TO 4.
NG	▶	Repair harness or connector.

4	CHECK FOR AUTO AMP. OUTPUT

Set up Self-diagnosis STEP 4.
Measure voltage across auto amp. harness terminals and body ground.

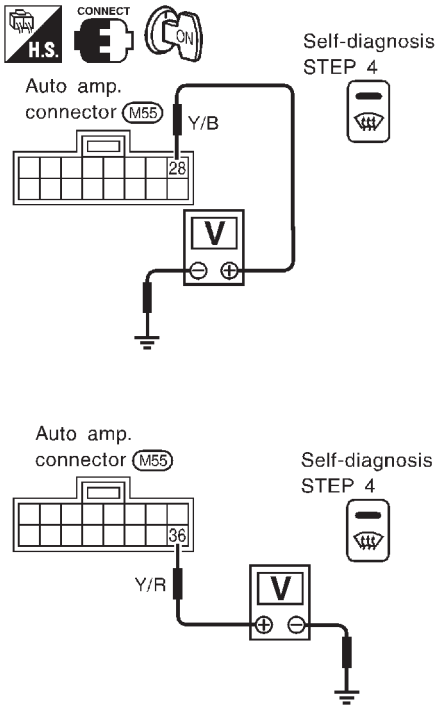

RHA506GB

Code No.	Terminals No. (+)	Terminals No. (–)	Condition	Voltage V
41	28	Body ground	REC	12
42	36			0
44	28		FRE	0
45 46	36			12

0V: Approx. 0V
12V: Approx. 12V

MTBL0078

OK or NG

OK	▶	Replace intake door motor.
NG	▶	Replace auto amp.

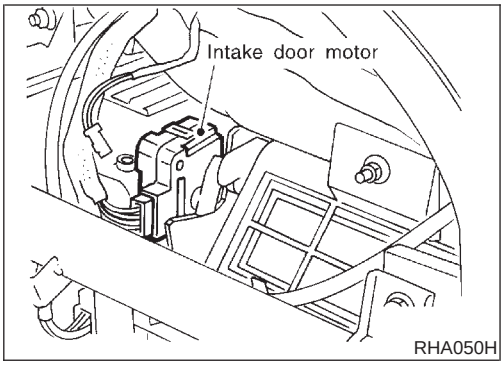

CONTROL LINKAGE ADJUSTMENT

=NCHA0093

Intake Door

NCHA0093S01

1. Install intake door motor on intake unit and connect it to main harness.
2. Set up code No. 41 in Self-diagnosis STEP 4. Refer to HA-32.
3. Move intake door link by hand and hold it in REC position.
4. Attach intake door lever to rod holder.
5. Make sure intake door operates properly when changing from code No. 41 to 46 by pushing DEF switch.

41	42	43	44	45	46
REC		20% FRE	FRE		

Blower Motor

TROUBLE DIAGNOSIS PROCEDURE FOR BLOWER MOTOR

=NCHA0094

SYMPTOM:

- **Blower motor operation is malfunctioning.**
- **Blower motor operation is malfunctioning under out of starting fan speed control.**

INSPECTION FLOW

1. Confirm symptom by performing the following operational check.

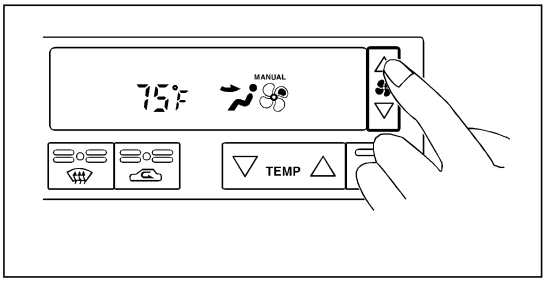

OPERATIONAL CHECK – Blower
a. Press fan switch (up side) one time.
Blower should operate on low speed.
The fan symbol should have one blade lit.
b. Press fan switch (up side) one more time, and continue checking blower speed and fan symbol until all speeds are checked.
c. Leave blower on MAX speed.
If OK (symptom cannot be duplicated), perform complete operational check (*12).
If NG (symptom is confirmed), continue with STEP-2 following.

2. Check for any service bulletins. → 3. Perform self-diagnosis STEP-1. (*1)

OK

4. Perform self-diagnosis STEP-2. (*9)
Code No. 20 should be displayed after approx. 4 second.
NG → Go to appropriate malfunctioning sensor circuit. (*6)

OK

5. Perform self-diagnosis STEP-4. (*9)
Does blower motor speed change according to each code No.?
No → Go to Blower Motor Circuit. (*7)

Code No.	41	42	43	44	45	46
Blower motor speed	Low	Middle high	Middle low			High

Yes

6. Is engine coolant temperature below 50°C (122°F) and ambient temperature below 15°C (59°F)?
No → Blower motor operation is normal.

Yes

7. Is blower motor operating under starting blower speed control?
No → Go to Blower Motor Circuit. (*8)

Cause cannot be confirmed by self-diagnosis.

OK → Check thermal transmitter control circuit. Refer to EL-(*14), "Electrical Component Inspection".

Yes

8. Check ambient sensor circuit. (*2)

OK

9. Check in-vehicle sensor circuit. (*3)

OK

10. Check sunload sensor circuit. (*4)

OK

11. Check intake sensor circuit. (*13)

OK

12. Check air mix door motor PBR circuit. (*5)

OK

If the symptom still exists, perform a complete operational check (*10) and check for other symptoms. [Refer to symptom table, (*11).] Does another symptom exist?
Yes → Go to Trouble Diagnosis for related symptom.

Another symptom exists.

No

Replace auto amp. → INSPECTION END

SHA356F

*1: HA-32
*2: HA-92
*3: HA-95
*4: HA-99
*5: HA-104
*6: STEP-BY-STEP PROCEDURE (HA-32), see No. 12.
*7: HA-67
*8: HA-67
*9: HA-32
*10: HA-42
*11: HA-41
*12: HA-42
*13: HA-102
*14: EL-97

SYSTEM DESCRIPTION

=NCHA0062

Component Parts

NCHA0062S01

Fan speed control system components are:

1) Auto amp.
2) Fan control amp.
3) A/C LAN system (PBR built-in mode door motor and air mix door motor)
4) In-vehicle sensor
5) Ambient sensor
6) Sunload sensor
7) Intake sensor

System Operation

NCHA0062S02

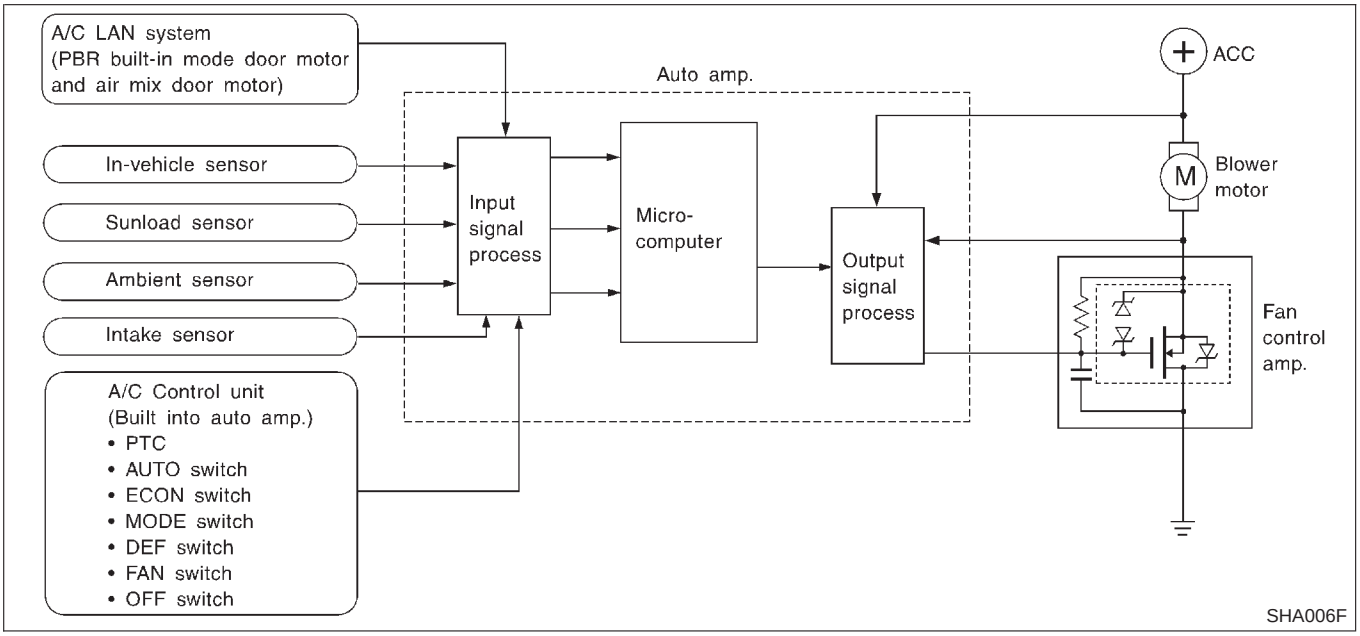

Automatic Mode

NCHA0062S03

In the automatic mode, the blower motor speed is calculated by the automatic amplifier based on inputs from the PBR, in-vehicle sensor, sunload sensor, intake sensor and ambient sensor. The blower motor applied voltage ranges from approximately 5 volts (lowest speed) to 12 volts (highest speed).

The control blower speed (in the range of 5 to 12V), the automatic amplifier supplies a gate voltage to the fan control amplifier. Based on this voltage, the fan control amplifier controls the voltage supplied to the blower motor.

Starting Fan Speed Control

NCHA0062S04

Start Up From "COLD SOAK" Condition (Automatic mode)

NCHA0062S0401

In a cold start up condition where the engine coolant temperature is below 50°C (122°F), the blower will not operate for a short period of time (up to 126 seconds). The exact start delay time varies depending on the ambient and engine coolant temperature.

In the most extreme case (very low ambient) the blower starting delay will be 126 seconds as described above. After this delay, the blower will operate at low speed until the engine coolant temperature rises above 55°C (131°F), at which time the blower speed will increase to the objective speed.

Start Up From Normal or "HOT SOAK" Condition (Automatic mode)

NCHA0062S0402

The blower will begin operation momentarily after the AUTO button is pushed. The blower speed will gradually rise to the objective speed over a time period of 3 seconds or less (actual time depends on the objective blower speed).

Blower Speed Compensation

NCHA0062S05

Sunload

NCHA0062S0501

When the in-vehicle temperature and the set temperature are very close, the blower will be operating at low speed. The low speed will vary depending on the sunload. During conditions of high sunload, the blower low speed is "normal" low speed (approx. 6V). During low or no sunload conditions, the low speed will drop to "low" low speed (approx. 5V).

Ambient

NCHA0062S0502

When the ambient temperature is in the "moderate" range [10 - 15°C (50 - 59°F)], the computed blower voltage will be compensated (reduced) by up to 3.5V (depending on the blower speed). In the "extreme" ambient ranges [below 0°C (32°F) and above 20°C (68°F)] the computed objective blower voltage is not compensated at all. In the ambient temperature ranges between "moderate" and "extreme" [0 - 10°C (32 - 50°F) and 15 - 20°C (59 - 68°F)], the amount of compensation (for a given blower speed) varies depending on the ambient temperature.

Fan Speed Control Specification

NCHA0062S06

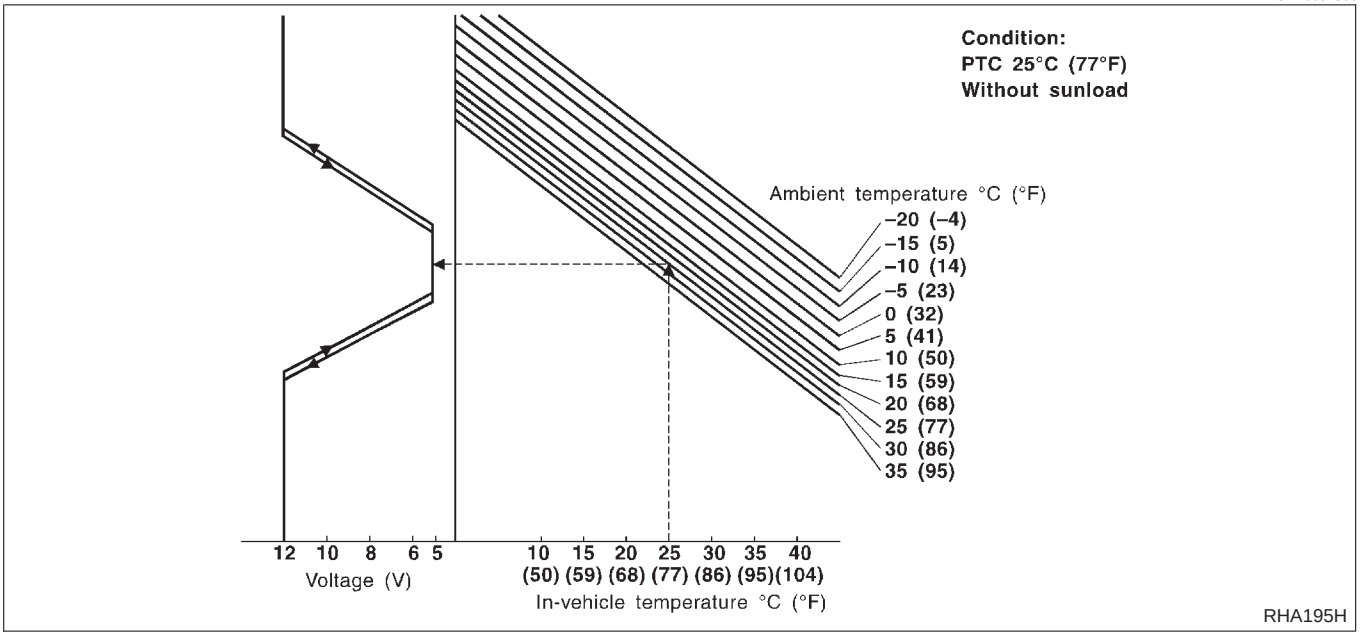

RHA195H

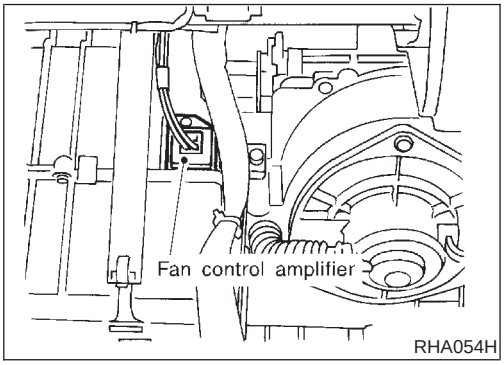

RHA054H

COMPONENT DESCRIPTION

NCHA0063

Fan Control Amplifier

NCHA0063S01

The fan control amplifier is located on the cooling unit. The fan control amp. receives a gate voltage from the auto amp. to steplessly maintain the blower fan motor voltage in the 5 to 12 volt range (approx.).

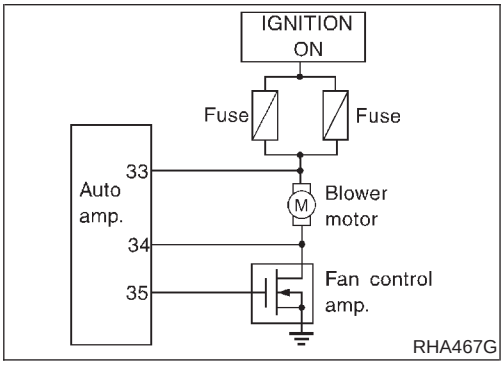

RHA467G

DIAGNOSTIC PROCEDURE

NCHA0064

SYMPTOM: Blower motor operation is malfunctioning under Starting Fan Speed Control.

1	CHECK POWER SUPPLY FOR FAN AUTO AMP.

Do approx. 12 volts exist between auto amp. harness terminal No. 33 and body ground?

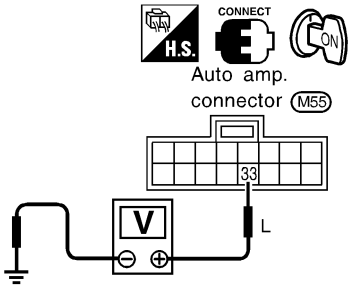

RHA902HC

Yes or No

Yes	▶	GO TO 2.
No	▶	• Check power supply circuit and 15A fuses (Nos. 1 and 2, located in the fuse block). Refer to EL-14, "Wiring Diagram — POWER —". • If OK, check for open circuit in wiring harness. Repair or replace as necessary. • If NG, replace fuse and check wiring harness for short circuit. Repair or replace as necessary.

2	CHECK POWER SUPPLY FOR FAN CONTROL AMP.

Disconnect fan control amp. harness connector.
Do approx. 12 volts exist between fan control amp. harness terminal No. 3 and body ground?

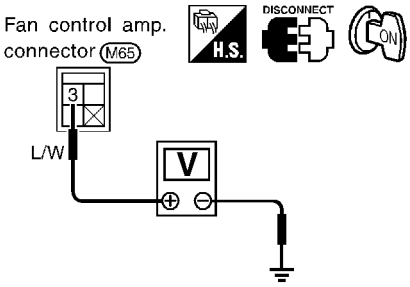

RHA480GA

Yes or No

Yes	▶	GO TO 3.
No	▶	GO TO 10.

3	CHECK BODY GROUND CIRCUIT FOR FAN CONTROL AMP.

Does continuity exist between fan control amp. harness terminal No. 1 and body ground?

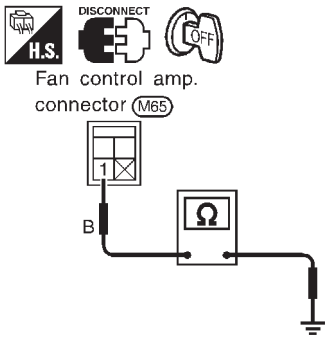

RHA089GB

Yes or No

Yes	▶	Reconnect fan control amp. harness connector. And GO TO 4.
No	▶	Repair harness or connector.

4	CHECK VOLTAGE FOR FAN CONTROL AMP.

Set up Self-diagnosis STEP 4.
Measure voltage across fan control amp. harness terminal No. 2 and body ground.

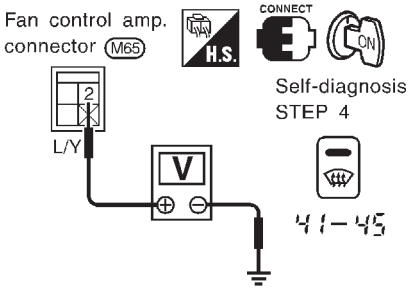

RHA055H

Code No.	Terminal No.		Voltage
	(+)	(–)	
41 – 45	(2)	Body ground	Approx. 2.5 - 3V

MTBL0465

OK or NG

OK	▶	GO TO 5.
NG	▶	• If the voltage is less than 2.5V. Replace fan control amp. • If the voltage is more than 3.0V. GO TO 5.

5	CHECK FAN CONTROL AMP.

Refer to HA-72.

OK or NG

OK	▶	GO TO 5.
NG	▶	1. Replace fan control amp. 2. Go to "STEP-BY-STEP PROCEDURE", HA-32 and perform self-diagnosis STEP 4. Confirm that blower motor operation is normal.

6	CHECK BLOWER MOTOR ROTATION	
Is blower motor rotate when fan speed 1 position with ignition switch at ON?		
Yes or No		
Yes	▶	Replace fan control amp.
No	▶	GO TO 7.

7	CHECK CIRCUIT BETWEEN AUTO AMP. AND FAN CONTROL AMP.	

1. Disconnect auto amp. and fan control amp. harness connector.
2. Check circuit continuity between auto amp. harness terminal No. 35 and fan control amp. harness terminal No. 2.
   Continuity should exist.

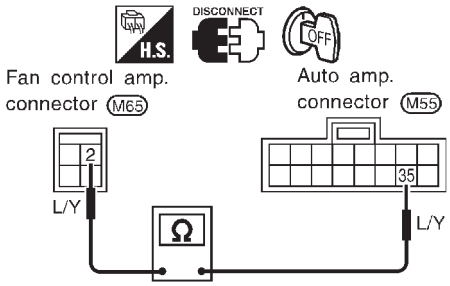

RHA056H

If OK, check harness for short.

OK or NG		
OK	▶	GO TO 8.
NG	▶	Repair harness or connector.

8	CHECK CIRCUIT CONTINUITY BETWEEN AUTO AMP. AND FAN CONTROL AMP.	

Check circuit continuity between auto amp. harness terminal No. 34 and fan control amp. harness terminal No. 3.
Continuity should exist.

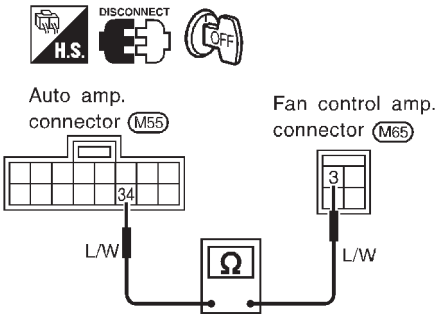

RHA057H

If OK, check harness for short.

OK or NG		
OK	▶	GO TO 9.
NG	▶	Repair harness or connector.

9	CHECK CIRCUIT CONTINUITY BETWEEN AUTO AMP. AND BLOWER MOTOR

Check circuit continuity between auto amp. harness terminal No. 33 and blower motor harness terminal No. 1.
Continuity should exist.

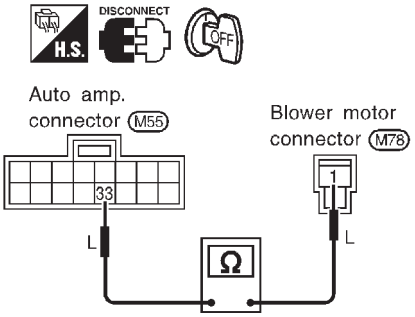

RHA058H

If OK, check harness for short.

OK or NG

OK	▶	Replace auto amp.
NG	▶	Repair harness or connector.

10	CHECK POWER SUPPLY FOR BLOWER MOTOR

Disconnect blower motor connector connector.
Do approx. 12 volts exist between blower motor harness terminal No. 1 and body ground?

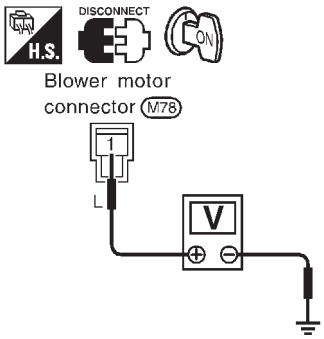

RHA091GB

Yes or No

Yes	▶	GO TO 11.
No	▶	1. Check power supply circuit and 15A fuses (Nos. 1 and 2, located in the fuse block). Refer to EL-14, "Wiring Diagram — POWER —". 2. If OK, check for open circuit in wiring harness. Repair or replace as necessary. 3. If NG, Replace fuse and check wiring harness for short circuit. Repair or replace as necessary.

11	CHECK CIRCUIT CONTINUITY BETWEEN BLOWER MOTOR AND FAN CONTROL AMP.

Check circuit continuity between blower motor harness terminal No. 2 and fan control amp. harness terminal No. 3.
Continuity should exist.

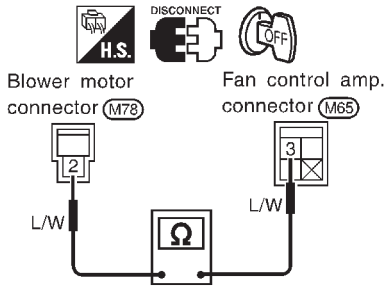

RHA472GA

If OK, check harness for short.

OK or NG

OK	▶	GO TO 12.
NG	▶	Repair harness or connector.

12	CHECK BLOWER MOTOR

Refer to "COMPONENT INSPECTION" (HA-72).

NG	▶	Replace blower motor.

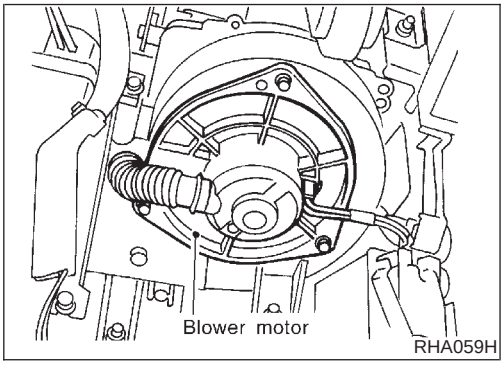

RHA059H

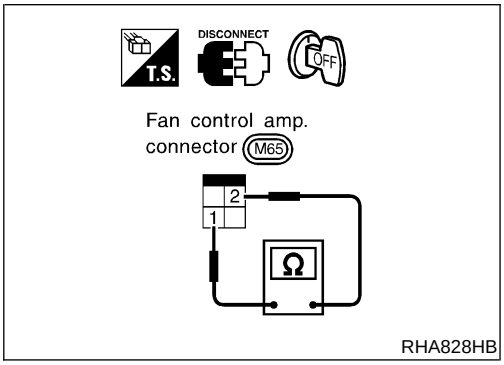

RHA828HB

COMPONENT INSPECTION

NCHA0065

Blower Motor

NCHA0065S01

Confirm smooth rotation of the blower motor.

- Ensure that there are no foreign particles inside the intake unit.

Fan Control Amp.

NCHA0065S02

Check continuity between terminals.

Terminal Nos.	Continuity
1 - 2	Yes

Magnet Clutch

TROUBLE DIAGNOSIS PROCEDURE FOR MAGNET CLUTCH

=NCHA0095

SYMPTOM:

- **Magnet clutch does not engage.**

INSPECTION FLOW

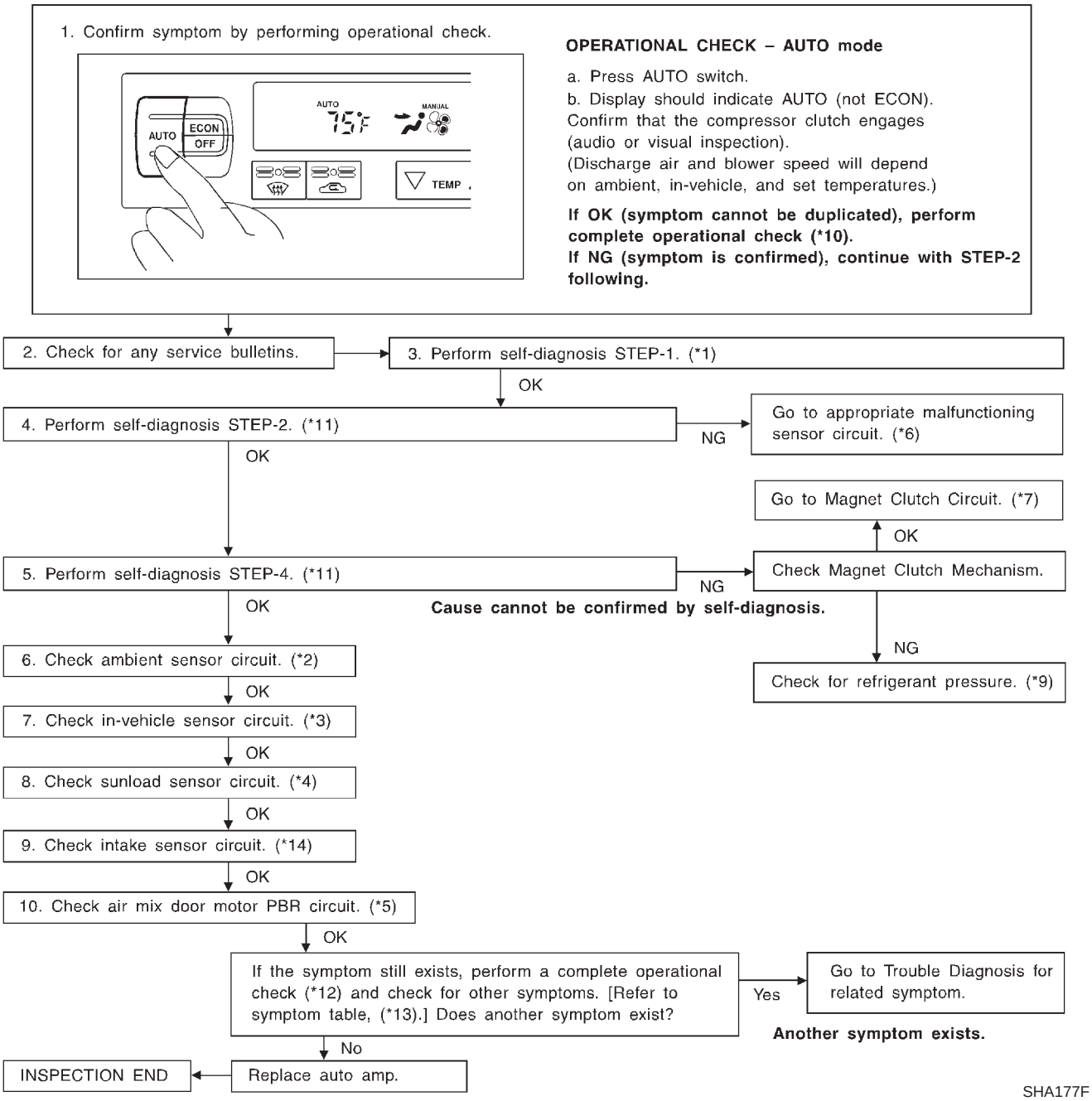

*1: STEP-BY-STEP PROCEDURE (HA-32)
*2: HA-92
*3: HA-95
*4: HA-99
*5: HA-104
*6: STEP-BY-STEP PROCEDURE (HA-32), see No. 12.
*7: HA-74
*9: HA-83
*10: HA-42
*11: STEP-BY-STEP PROCEDURE (HA-32), see No. 5, 8.
*12: HA-42
*13: HA-41
*14: HA-102

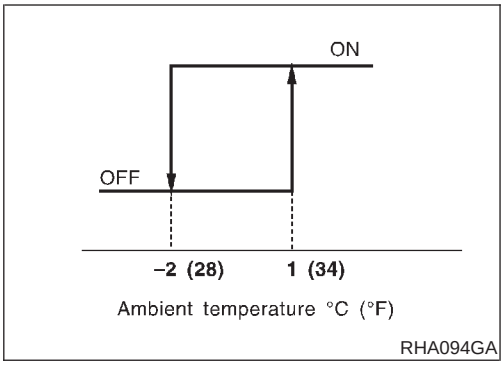

SYSTEM DESCRIPTION

=NCHA0066

Auto amplifier controls compressor operation by ambient temperature and signal from ECM.

Low Temperature Protection Control

NCHA0066S01

Auto amplifier will turn the compressor "ON" or "OFF" as determined by a signal detected by ambient sensor.
When ambient temperatures are greater than 1°C (34°F), the compressor turns "ON". The compressor turns "OFF" when ambient temperatures are less than −2°C (28°F).

DIAGNOSTIC PROCEDURE

NCHA0067

SYMPTOM: Magnet clutch does not engage when AUTO switch is ON.

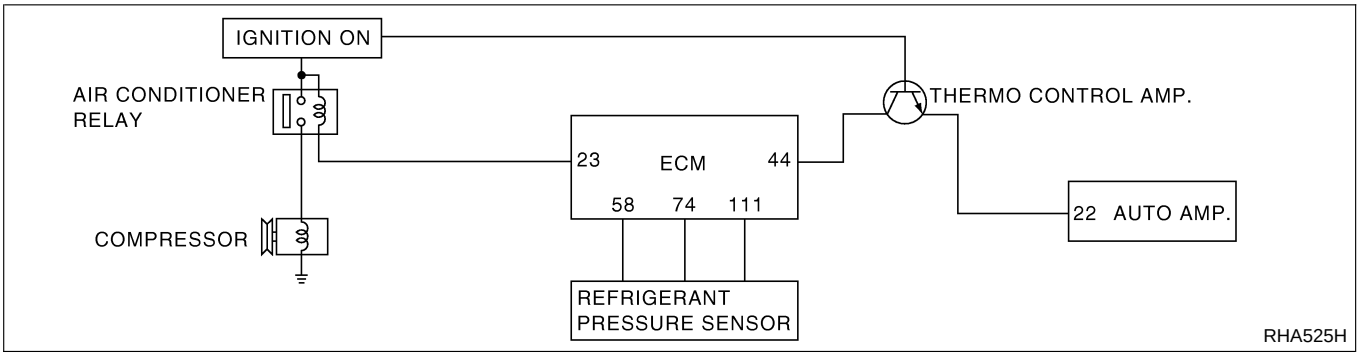

1	CHECK POWER SUPPLY FOR COMPRESSOR
Disconnect compressor harness connector. Do approx. 12 volts exist between compressor harness terminal No. 1 and body ground?	

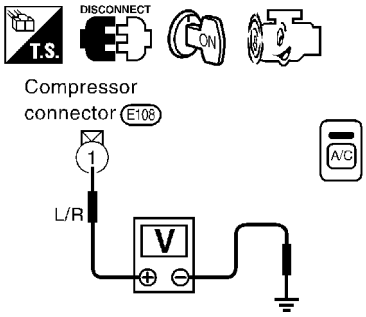

Yes or No

Yes	▶	**Check magnet clutch coil.** 1. If NG, replace magnet clutch. Refer to HA-111. 2. Go to self-diagnosis step-by-step procedure (HA-32) and perform self-diagnosis STEP-4. Confirm that magnet clutch operation is normal.
No	▶	Disconnect A/C relay. And GO TO 2.

2	CHECK CIRCUIT CONTINUITY BETWEEN A/C RELAY AND COMPRESSOR HARNESS

Check circuit continuity between A/C relay harness terminal No. 3 and compressor harness terminal No. 1.
Continuity should exist.

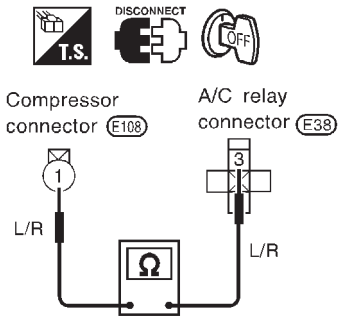

RHA061H

If OK, check harness for short.

OK or NG

OK	▶	GO TO 3.
NG	▶	Repair harness or connector.

3	CHECK POWER SUPPLY FOR A/C RELAY

Disconnect A/C relay.
Do approx. 12 volts exist between A/C relay harness terminal Nos. 1, 5 and body ground?

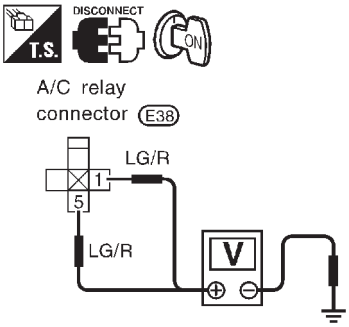

RHA062H

Yes or No

Yes	▶	GO TO 4.
No	▶	Check power supply circuit and 10A (No. 6) fuse at fuse block. Refer to EL-14, "Wiring Diagram — POWER —". ● If OK, check for open circuit in wiring harness. Repair or replace as necessary. ● If NG, replace fuse and check wiring harness for short circuit. Repair or replace as necessary.

4	CHECK A/C RELAY AFTER DISCONNECTING IT

Refer to HA-79.

OK or NG

OK	▶	Reconnect A/C relay. And GO TO 5.
NG	▶	1. Replace A/C relay. 2. Go to self-diagnosis step-by-step procedure (HA-32) and perform self-diagnosis STEP-4. Confirm that magnet clutch operation is normal.

5	CHECK COIL SIDE CIRCUIT OF A/C RELAY
Do approx. 12 volts exist between ECM harness terminal No. 23 and body ground?	

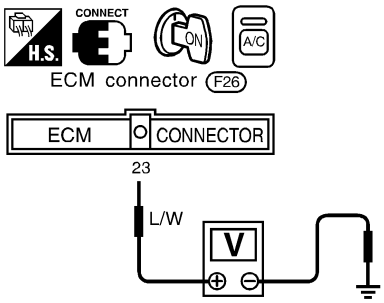

RHA534H

Yes or No

Yes	▶	GO TO 6.
No	▶	Disconnect A/C relay. Disconnect ECM harness connector. GO TO 12.

6	CHECK VOLTAGE FOR ECM
Do approx. 12 volts exist between ECM harness terminal No. 44 and body ground?	

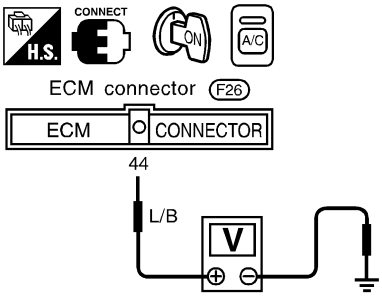

RHA536HD

Yes or No

Yes	▶	Disconnect ECM harness connector. Disconnect refrigerant pressure sensor harness connector. GO TO 7.
No	▶	Check ECM. Refer to EC-134, "ECM Terminals and Reference Value".

7	CHECK REFRIGERANT PRESSURE SENSOR
Refer to HA-79.	
OK	▶ GO TO 8.
NG	▶ Replace refrigerant pressure sensor.

8	CHECK VOLTAGE FOR THERMO CONTROL AMP.

Do approx. 12 volts exist between thermo control amp. harness terminal No. 3 and body ground?

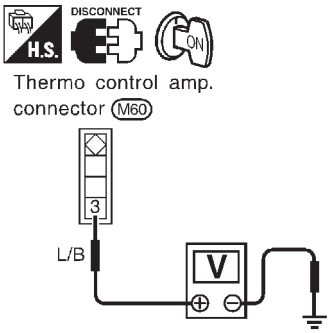

RHA065H

Yes or No

Yes	▶	GO TO 9.
No	▶	Repair harness or connector.

9	CHECK POWER SUPPLY FOR THERMO CONTROL AMP.

Do approx. 12 volts exist between thermo control amp. harness terminal No. 1 and body ground?

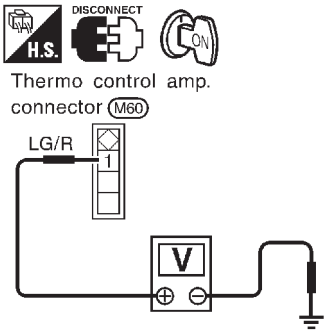

RHA341FA

Yes or No

Yes	▶	GO TO 10.
No	▶	Check power supply circuit and 10A (No. 6) fuse at fuse block. Refer to EL-14, "Wiring Diagram — POWER —". ● If OK, check for open circuit in wiring harness. Repair or replace as necessary. ● If NG, replace fuse and check wiring harness for short circuit. Repair or replace as necessary.

10	CHECK THERMO CONTROL AMP. OPERATION

Reconnect thermo control amp. harness connector.
Does magnet clutch engage when short circuit between thermo control amp. haness terminal No. 2 and body ground?

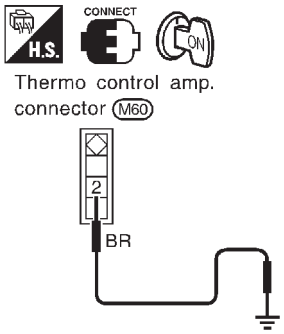

RHA066H

Yes or No

Yes	▶	GO TO 11.
No	▶	Replace thermo control amp.

11	CHECK CIRCUIT CONTINUITY BETWEEN THERMO CONTROL AMP. AND AUTO AMP.

Check circuit continuity between thermo control amp. harness terminal No. 2 and auto amp. harness terminal No. 22.
Continuity should exist.

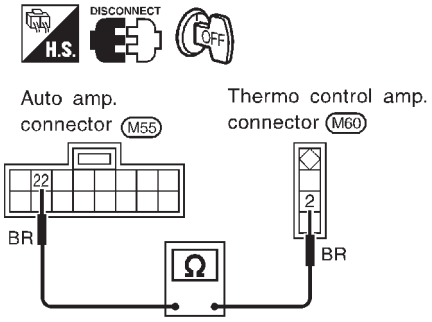

RHA067H

If OK, check harness for short.

OK or NG

OK	▶	Replace auto amp.
NG	▶	Repair harness or connector.

12	CHECK CIRCUIT CONTINUITY BETWEEN A/C RELAY AND ECM

Check circuit continuity between A/C relay harness terminal No. 2 and ECM harness terminal No. 23.

Continuity should exist.

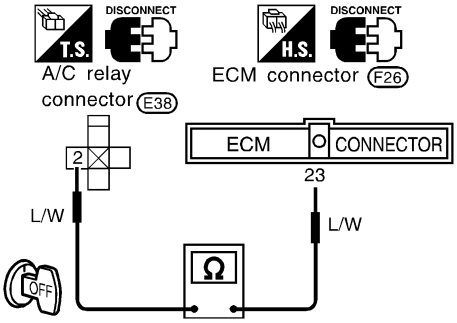

RHA535H

If OK, check harness for short.

OK or NG

OK	▶	Check ECM. Refer to EC-134, "ECM Terminals and Reference Value".
NG	▶	Repair harness or connector.

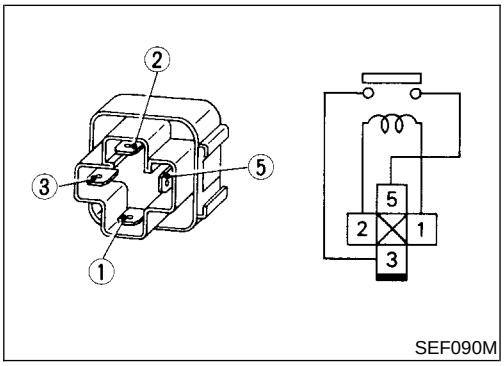

SEF090M

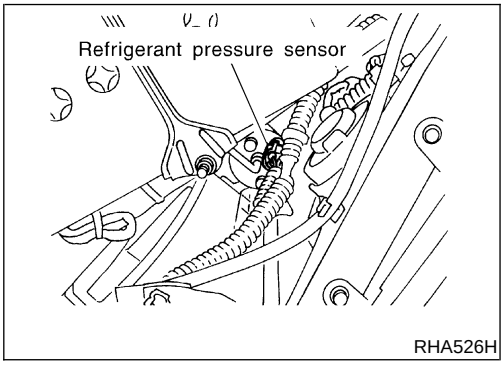

RHA526H

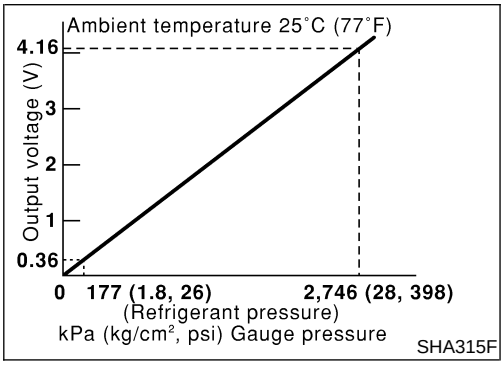

SHA315F

ELECTRICAL COMPONENT INSPECTION

NCHA0068

A/C Relay

NCHA0068S01

Check continuity between terminal Nos. 3 and 5.

Conditions	Continuity
12V direct current supply between terminal Nos. 1 and 2	Yes
No current supply	No

If NG, replace relay.

Refrigerant Pressure Sensor

NCHA0068S03

Make sure that higher A/C refrigerant pressure results in higher refrigerant-pressure sensor output voltage.
Refer to EC-621, "Diagnostic Procedure".

Insufficient Cooling

TROUBLE DIAGNOSIS PROCEDURE FOR INSUFFICIENT COOLING

=NCHA0096

SYMPTOM:

- **Insufficient cooling**

INSPECTION FLOW

1. Confirm symptom by performing the following operational check.

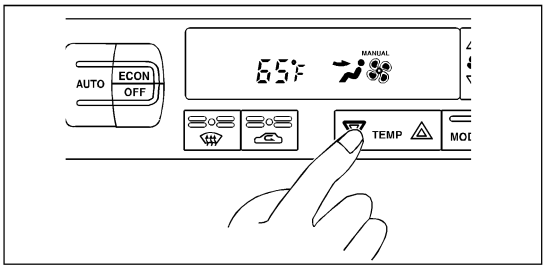

OPERATIONAL CHECK – Temperature decrease

a. Press the temperature decrease button until 18°C (65°F) is displayed.

b. Check for cold air at discharge air outlets.

If OK (symptom cannot be duplicated), perform complete operational check (*11).
If NG (symptom is confirmed), continue with STEP-2 following.

2. Check for any service bulletins. → 3. Perform self-diagnosis STEP-1. (*1)

3. Perform self-diagnosis STEP-1. (*1)
- OK → 4. Perform self-diagnosis STEP-2. (*12)
- NG → Go to appropriate malfunctioning sensor circuit. (*5)

4. Perform self-diagnosis STEP-2. (*12)
- OK → 5. Perform self-diagnosis STEP-4. (*12)
- NG → Go to appropriate malfunctioning sensor circuit. (*5)

5. Perform self-diagnosis STEP-4. (*12)
- OK → 6. Check compressor belt tension. Refer to MA-(*14), “Checking Drive Belts”.
- NG → **Go to appropriate malfunctioning items.**
  - Check mode door motor and air mix door motor circuit. (*6)
  - Check intake door circuit. (*7)
  - Check blower motor circuit. (*8)
  - Check magnet clutch circuit. (*9)

6. Check compressor belt tension. Refer to MA-(*14), “Checking Drive Belts”.
- OK → 7. Check air mix door operation. (*2)
- NG → Adjust or replace compressor belt.

7. Check air mix door operation. (*2)
- OK → 8. Check cooling fan motor operation.
- NG → Adjust or replace air mix door control linkage.

8. Check cooling fan motor operation.
- OK → 9. Before connecting ACR4 to vehicle, check ACR4 gauges. No refrigerant pressure should be displayed. If NG, recover refrigerant from equipment lines.
- NG → Refer to EC section.

9. Before connecting ACR4 to vehicle, check ACR4 gauges. No refrigerant pressure should be displayed. If NG, recover refrigerant from equipment lines.
- OK → 10. Confirm refrigerant purity in supply tank using ACR4 and refrigerant identifier.

10. Confirm refrigerant purity in supply tank using ACR4 and refrigerant identifier.
- OK → 11. Connect ACR4 to vehicle. Confirm refrigerant purity in vehicle A/C system using ACR4 and refrigerant identifier.
- NG → Refer to Contaminated refrigerant. (*13)

11. Connect ACR4 to vehicle. Confirm refrigerant purity in vehicle A/C system using ACR4 and refrigerant identifier.
- OK → 12. Check refrigeration cycle pressure with manifold gauge connected. Refer to (*3).
- NG → Refer to Contaminated refrigerant. (*13)

12. Check refrigeration cycle pressure with manifold gauge connected. Refer to (*3).
- OK → 13. Check for evaporator coil freeze up.
- NG → Perform performance test diagnoses. Refer to (*10).

13. Check for evaporator coil freeze up.
- (Does not freeze up.) OK → 14. Check ducts for air leaks.
- (Freeze up.) NG → Replace compressor.

14. Check ducts for air leaks.
- OK → 15. Perform temperature setting trimmer. (*4)
  (1) Set up AUXILIARY MECHANISM mode in self-diagnosis.
  (2) Press ▼ (COLD) switch as desired.
- NG → Repair air leaks.

15. Perform temperature setting trimmer. (*4)
(1) Set up AUXILIARY MECHANISM mode in self-diagnosis.
(2) Press ▼ (COLD) switch as desired.
- OK → INSPECTION END

INSPECTION END

SHA357F

*1: HA-32
*2: HA-56
*3: HA-83
*4: HA-40
*5: STEP-BY-STEP PROCEDURE (HA-32), see No. 12.
*6: HA-50
*7: HA-60
*8: HA-67
*9: HA-74
*10: HA-81
*11: HA-42
*12: HA-32
*13: HA-3
*14: MA-13

PERFORMANCE TEST DIAGNOSES

NCHA0030

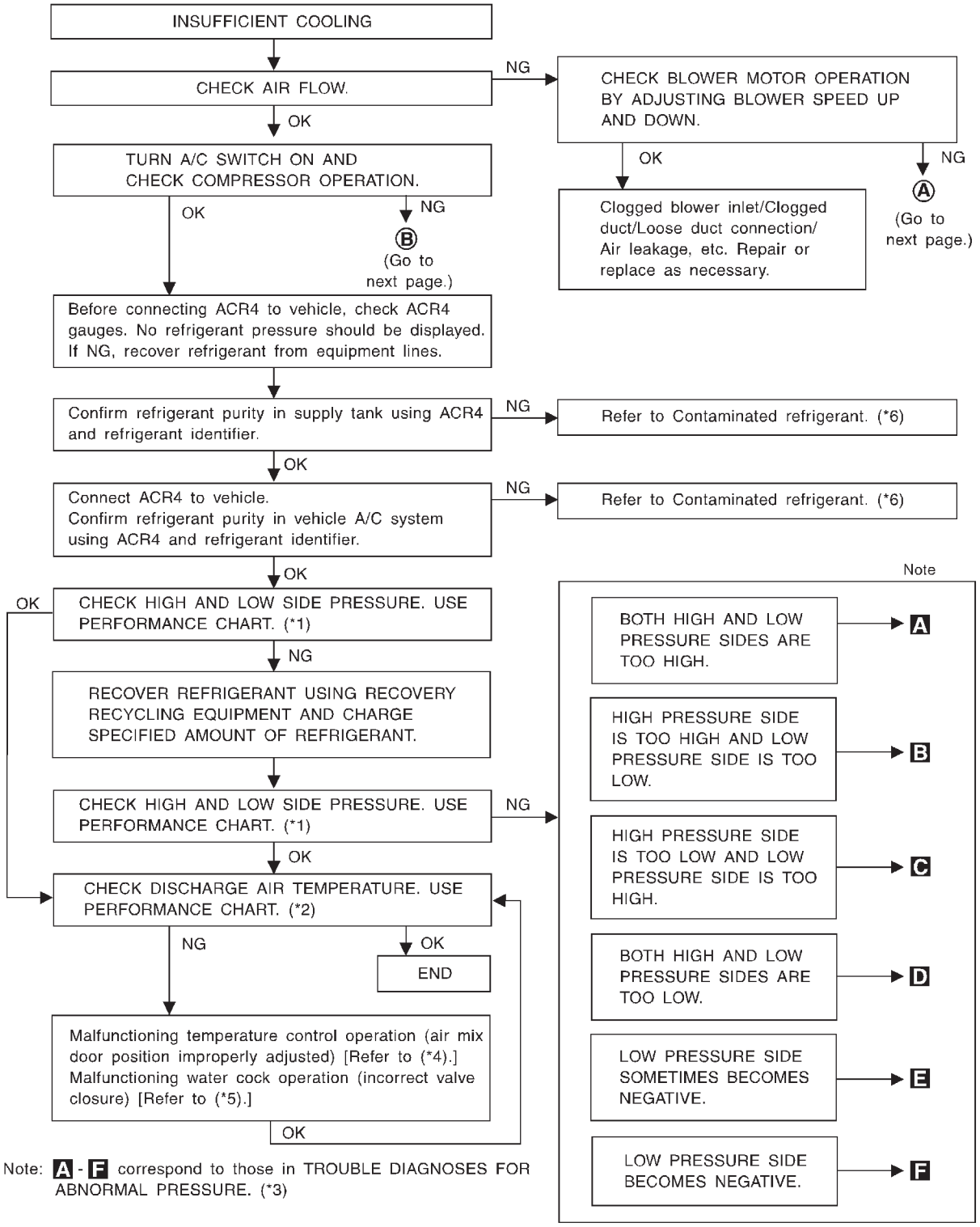

SHA194F

*1: HA-83
*2: HA-83
*3: HA-83
*4: HA-56
*5: HA-56
*6: HA-3

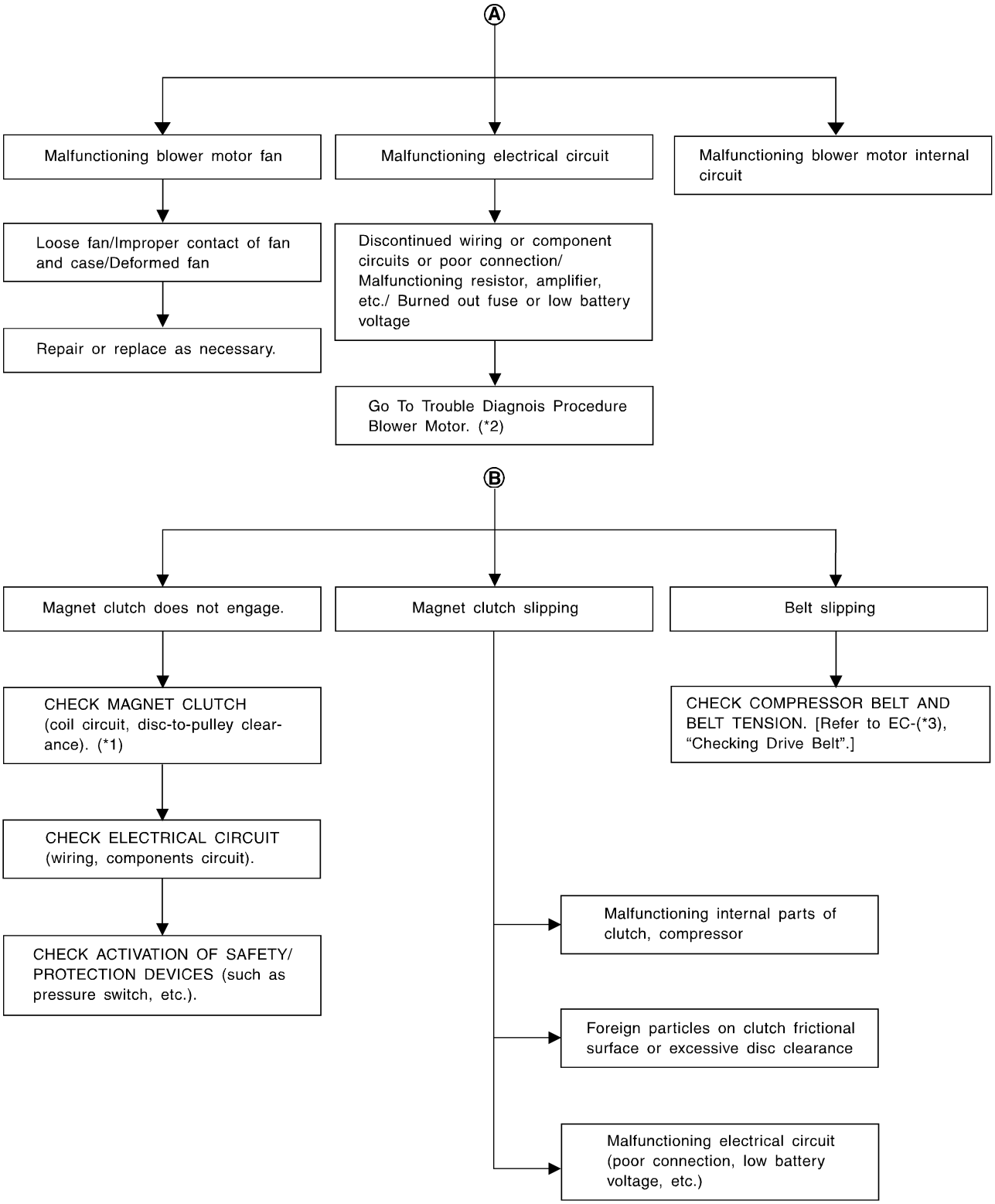

*1: HA-112 *2: HA-65 *3: MA-13

PERFORMANCE CHART

NCHA0031

Test Condition

NCHA0031S01

Testing must be performed as follows:

Vehicle location	Indoors or in the shade (in a well-ventilated place)
Doors	Closed
Door window	Open
Hood	Open
TEMP.	Max. COLD
Mode switch	(Ventilation) set
REC switch	(Recirculation) set
(blower) speed	Max. speed set
Engine speed	Idle speed
Operate the air conditioning system for 10 minutes before taking measurements.	

Test Reading

NCHA0031S02

Recirculating-to-discharge Air Temperature Table

NCHA0031S0201

Inside air (Recirculating air) at blower assembly inlet		Discharge air temperature at center ventilator °C (°F)
Relative humidity %	Air temperature °C (°F)	
50 - 60	25 (77)	10.9 - 12.9 (52 - 55)
	30 (86)	15.2 - 17.7 (59 - 64)
	35 (95)	19.4 - 22.5 (67 - 73)
60 - 70	25 (77)	12.9 - 15.0 (55 - 59)
	30 (86)	17.7 - 20.5 (64 - 69)
	35 (95)	22.5 - 25.2 (73 - 77)

Ambient Air Temperature-to-operating Pressure Table

NCHA0031S0202

Ambient air		High-pressure (Discharge side) kPa (kg/cm^2, psi)	Low-pressure (Suction side) kPa (kg/cm^2, psi)
Relative humidity %	Air temperature °C (°F)		
50 - 70	30 (86)	1,177 - 1,422 (12.0 - 14.5, 171 - 206)	216 - 255 (2.2 - 2.6, 31 - 37)
	35 (95)	1,344 - 1,648 (13.7 - 16.8, 195 - 239)	255 - 314 (2.6 - 3.2, 37 - 46)
	40 (104)	1,471 - 1,785 (15.0 - 18.2, 213 - 259)	304 - 382 (3.1 - 3.9, 44 - 55)

TROUBLE DIAGNOSES FOR ABNORMAL PRESSURE

NCHA0032

Whenever system's high and/or low side pressure is abnormal, diagnose using a manifold gauge. The marker above the gauge scale in the following tables indicates the standard (normal) pressure range. Since the standard (normal) pressure, however, differs from vehicle to vehicle, refer to HA-83 ("Ambient air temperature-to-operating pressure table").

Both High and Low-pressure Sides are Too High.

NCHA0032S01

Gauge indication	Refrigerant cycle	Probable cause	Corrective action
Both high and low-pressure sides are too high. **A** 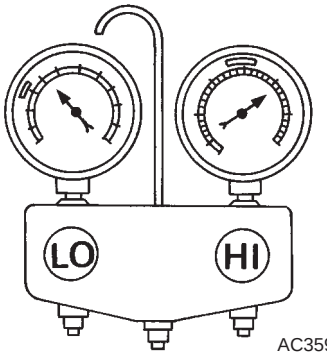 AC359A	● Pressure is reduced soon after water is splashed on condenser.	Excessive refrigerant charge in refrigeration cycle	Reduce refrigerant until specified pressure is obtained.
	Air suction by cooling fan is insufficient.	Insufficient condenser cooling performance ↓ 1. Condenser fins are clogged. 2. Improper fan rotation of cooling fan	● Clean condenser. ● Check and repair cooling fan as necessary.
	● Low-pressure pipe is not cold. ● When compressor is stopped high-pressure value quickly drops by approximately 196 kPa (2 kg/cm^2, 28 psi). It then decreases gradually thereafter.	Poor heat exchange in condenser (After compressor operation stops, high pressure decreases too slowly.) ↓ Air in refrigeration cycle	Evacuate repeatedly and recharge system.
	Engine tends to overheat.	Engine cooling systems malfunction.	Check and repair each engine cooling system.
	● An area of the low-pressure pipe is colder than areas near the evaporator outlet. ● Plates are sometimes covered with frost.	● Excessive liquid refrigerant on low-pressure side ● Excessive refrigerant discharge flow ● Expansion valve is open a little compared with the specification. ↓ 1. Improper thermal valve installation 2. Improper expansion valve adjustment	Replace expansion valve.

High-pressure Side is Too High and Low-pressure Side is Too Low.

NCHA0032S02

Gauge indication	Refrigerant cycle	Probable cause	Corrective action
High-pressure side is too high and low-pressure side is too low. **B** 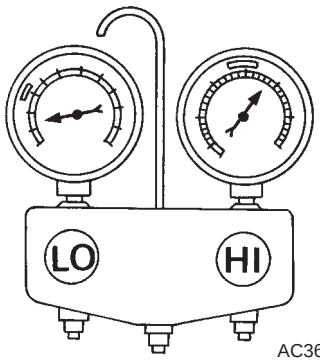 AC360A	Upper side of condenser and high-pressure side are hot, however, liquid tank is not so hot.	High-pressure tube or parts located between compressor and condenser are clogged or crushed.	● Check and repair or replace malfunctioning parts. ● Check lubricant for contamination.

High-pressure Side is Too Low and Low-pressure Side is Too High.

NCHA0032S03

Gauge indication	Refrigerant cycle	Probable cause	Corrective action
High-pressure side is too low and low-pressure side is too high. C 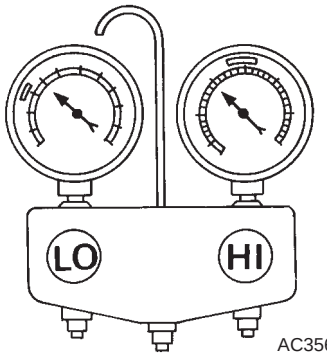 AC356A	High and low-pressure sides become equal soon after compressor operation stops.	Compressor pressure operation is improper. ↓ Damaged inside compressor packings	Replace compressor.
	No temperature difference between high and low-pressure sides	Compressor pressure operation is improper. ↓ Damaged inside compressor packings.	Replace compressor.

Both High- and Low-pressure Sides are Too Low.

NCHA0032S04

Gauge indication	Refrigerant cycle	Probable cause	Corrective action
Both high- and low-pressure sides are too low. **D** 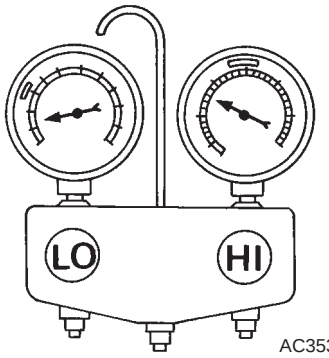 AC353A	• There is a big temperature difference between receiver drier outlet and inlet. Outlet temperature is extremely low. • Liquid tank inlet and expansion valve are frosted.	Liquid tank inside is slightly clogged.	• Replace liquid tank. • Check lubricant for contamination.
	• Temperature of expansion valve inlet is extremely low as compared with areas near liquid tank. • Expansion valve inlet may be frosted. • Temperature difference occurs somewhere in high-pressure side	High-pressure pipe located between receiver drier and expansion valve is clogged.	• Check and repair malfunctioning parts. • Check lubricant for contamination.
	• Expansion valve and liquid tank are warm or only cool when touched.	Low refrigerant charge ↓ Leaking fittings or components	Check refrigerant for leaks. Refer to "Checking for Refrigerant Leaks", HA-118.
	There is a big temperature difference between expansion valve inlet and outlet while the valve itself is frosted.	Expansion valve closes a little compared with the specification. ↓ 1. Improper expansion valve adjustment 2. Malfunctioning thermal valve 3. Outlet and inlet may be clogged.	• Remove foreign particles by using compressed air. • Check lubricant for contamination.
	An area of the low-pressure pipe is colder than areas near the evaporator outlet.	Low-pressure pipe is clogged or crushed.	• Check and repair malfunctioning parts. • Check lubricant for contamination.
	Air flow volume is not enough or is too low.	Evaporator is frozen.	• Check thermo control amp. operation. • Replace compressor.

Low-pressure Side Sometimes Becomes Negative.

NCHA0032S05

Gauge indication	Refrigerant cycle	Probable cause	Corrective action
Low-pressure side sometimes becomes negative. **E** 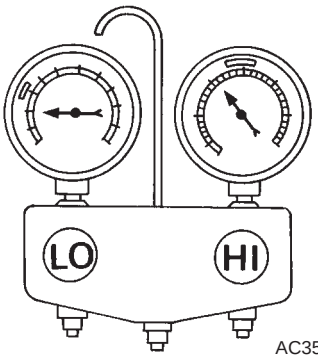 AC354A	• Air conditioning system does not function and does not cyclically cool the compartment air. • The system constantly functions for a certain period of time after compressor is stopped and restarted.	Refrigerant does not discharge cyclically. ↓ Moisture is frozen at expansion valve outlet and inlet. ↓ Water is mixed with refrigerant.	• Drain water from refrigerant or replace refrigerant. • Replace liquid tank.

Low-pressure Side Becomes Negative.

NCHA0032S06

Gauge indication	Refrigerant cycle	Probable cause	Corrective action
Low-pressure side becomes negative. F 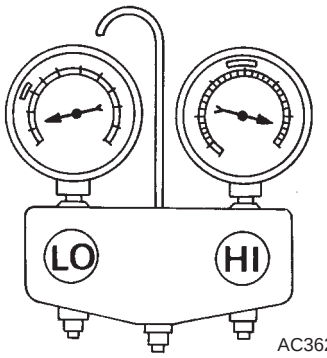 AC362A	Liquid tank or front/rear side of expansion valve's pipe is frosted or dewed.	High-pressure side is closed and refrigerant does not flow. ↓ Expansion valve or liquid tank is frosted.	Leave the system at rest until no frost is present. Start it again to check whether or not the problem is caused by water or foreign particles. ● If water is the cause, initially cooling is okay. Then the water freezes causing a blockage. Drain water from refrigerant or replace refrigerant. ● If due to foreign particles, remove expansion valve and remove the particles with dry and compressed air (not shop air). ● If either of the above methods cannot correct the problem, replace expansion valve. ● Replace liquid tank. ● Check lubricant for contamination.

Insufficient Heating

TROUBLE DIAGNOSIS PROCEDURE FOR INSUFFICIENT HEATING

=NCHA0097

SYMPTOM:

- **Insufficient heating**

INSPECTION FLOW

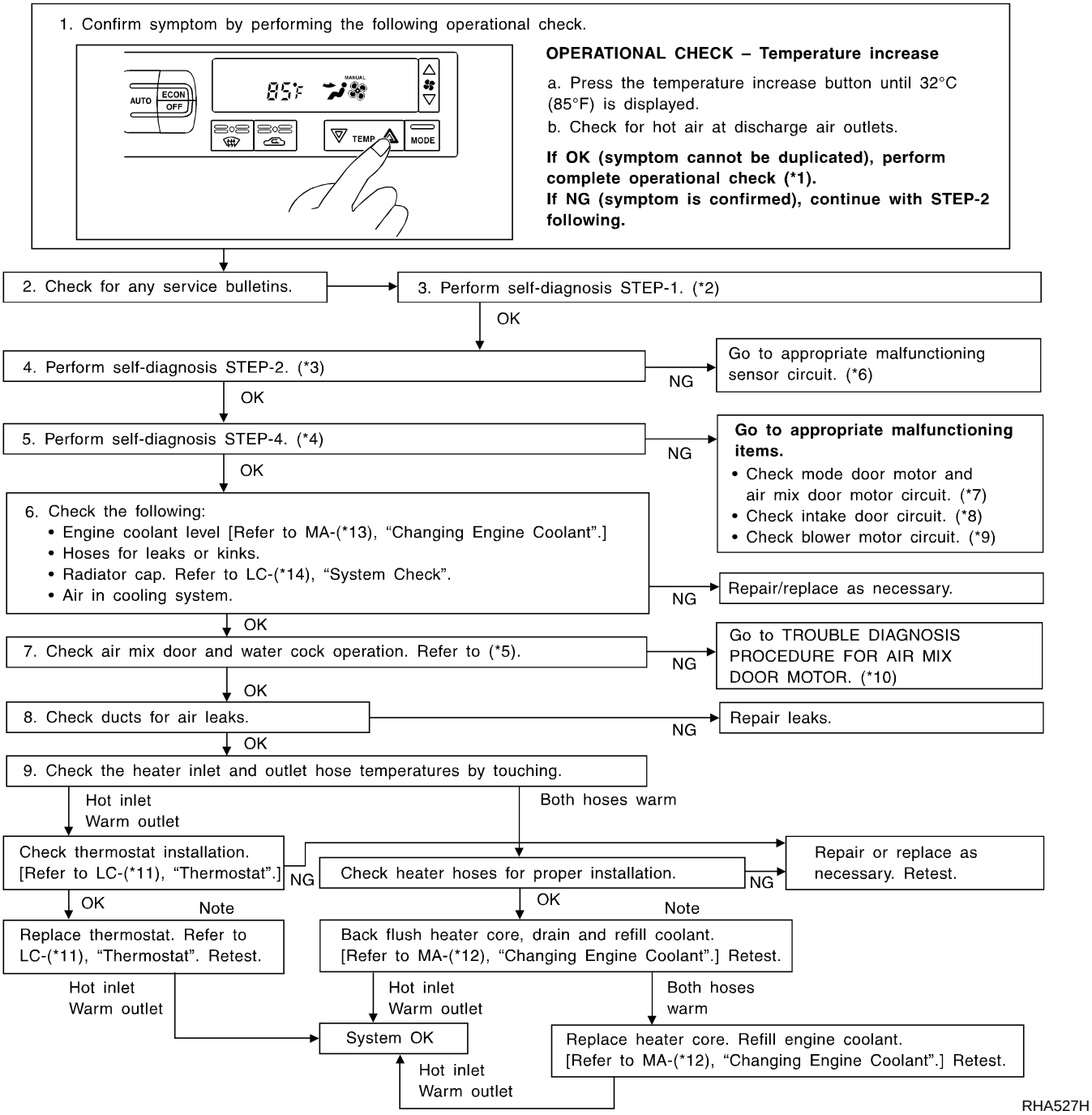

*1: HA-42
*2: HA-32
*3: HA-32
*4: HA-32
*5: HA-56
*6: STEP-BY-STEP PROCEDURE (HA-32), see No. 12.
*7: HA-50
*8: HA-60
*9: HA-67
*10: HA-54
*11: LC-12
*12: MA-14
*13: MA-14
*14: LC-9

Noise

TROUBLE DIAGNOSIS PROCEDURE FOR NOISE

=NCHA0100

SYMPTOM:

- **Noise**

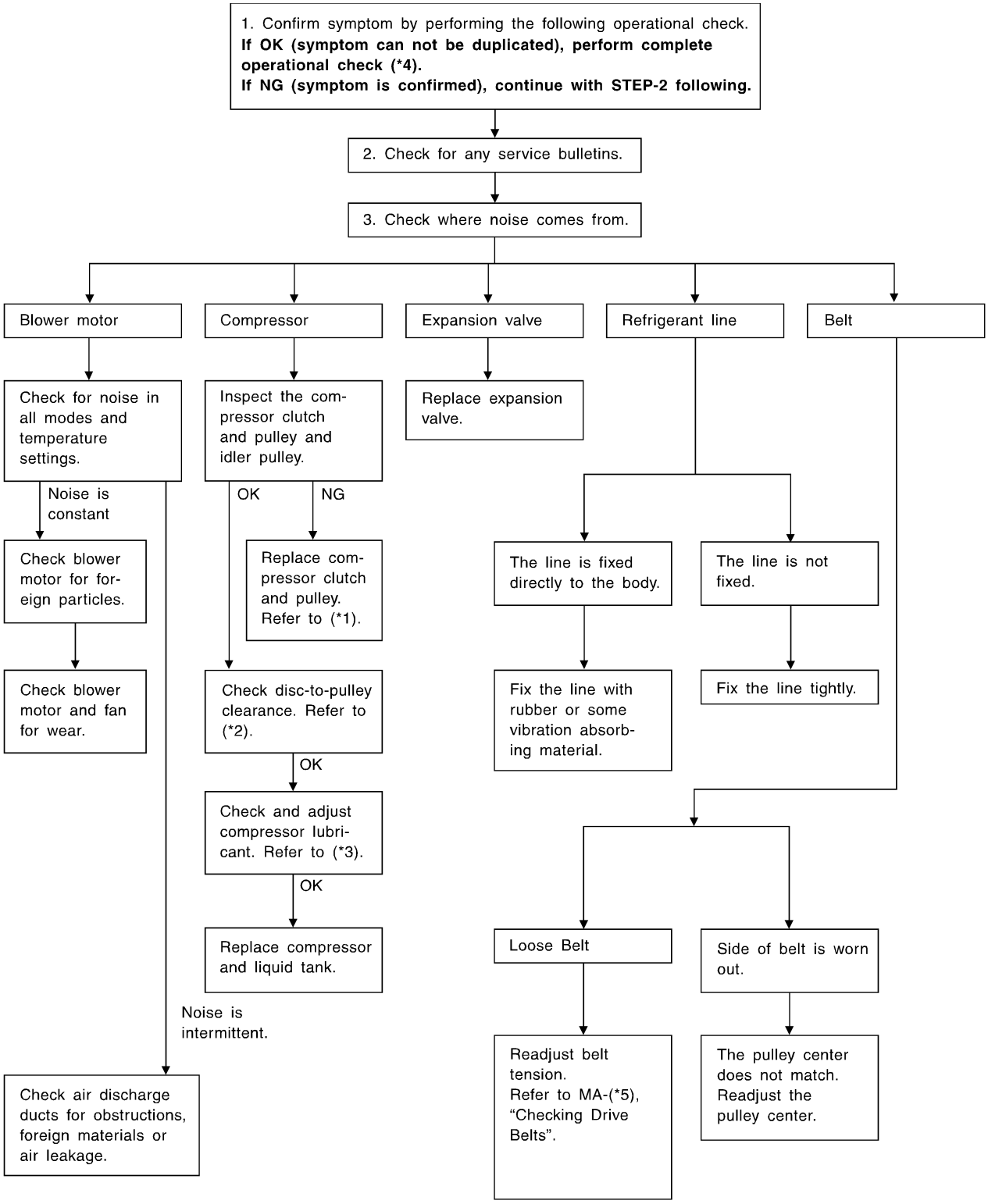

SHA358F

*1: HA-111
*2: HA-112
*3: HA-107
*4: HA-42
*5: MA-13

Self-diagnosis

TROUBLE DIAGNOSIS PROCEDURE FOR SELF-DIAGNOSIS

=NCHA0101

SYMPTOM:

- **Self-diagnosis cannot be performed.**

INSPECTION FLOW

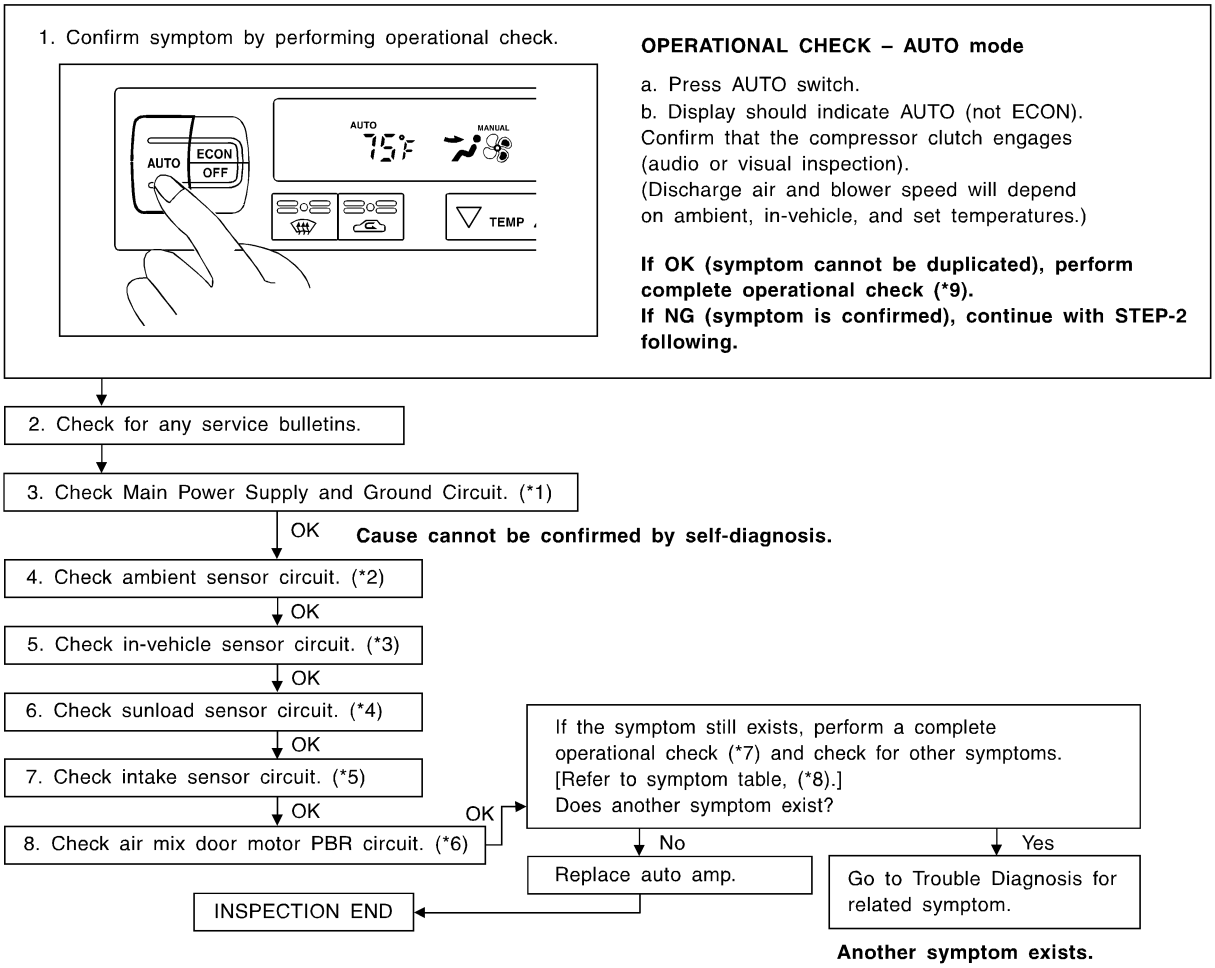

SHA365F

*1: HA-45	*4: HA-99	*7: HA-42
*2: HA-92	*5: HA-102	*8: HA-41
*3: HA-95	*6: HA-104	*9: HA-42

Memory Function

TROUBLE DIAGNOSIS PROCEDURE FOR MEMORY FUNCTION

=NCHA0102

SYMPTOM:

- **Memory function does not operate.**

INSPECTION FLOW

1. Confirm symptom by performing the following operational check.

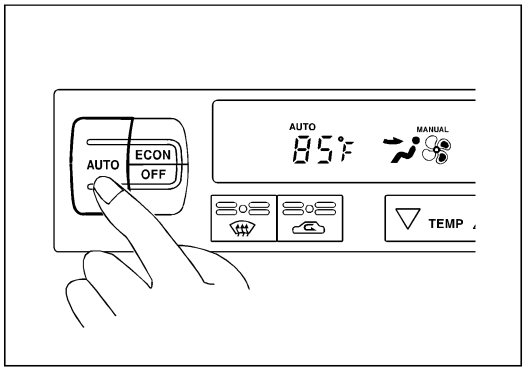

OPERATIONAL CHECK – Memory function

a. Set the temperature 85°F or 32°C.
b. Press OFF switch.
c. Turn the ignition off.
d. Turn the ignition on.
e. Press the AUTO switch.
f. Confirm that the set temperature remains at previous temperature.
g. Press OFF switch.

If OK (symptom cannot be duplicated), perform complete operational check (*2).
If NG (symptom is confirmed), continue with STEP-2 following.

↓

2. Check for any service bulletins.

↓

3. Check Main Power Supply and Ground Circuit. (*1)

↓ OK

4. Replace auto amp.

↓

5. FINAL CHECK
   Go to self-diagnosis step-by-step procedure (*3) and perform self-diagnosis STEP-2.
   Confirm that code No. 20 is displayed.

RHA885H

*1: HA-46 *2: HA-42 *3: HA-32

ECON (ECONOMY) Mode

TROUBLE DIAGNOSIS PROCEDURE FOR ECON (ECONOMY) MODE

=NCHA0103

SYMPTOM:

- **ECON mode does not operate.**

INSPECTION FLOW

1. Confirm symptom by performing the following operational check.

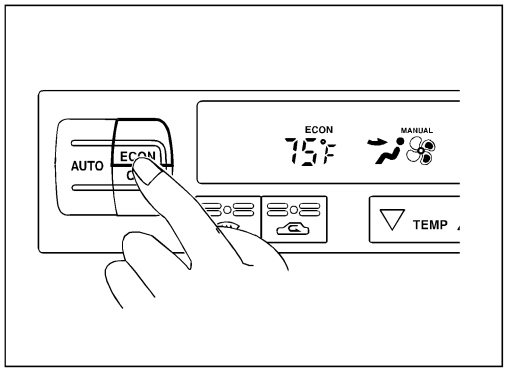

OPERATIONAL CHECK – ECON (ECONOMY) mode

a. Set the temperature 75°F or 25°C.
b. Press ECON switch.
c. Display should indicate ECON (not AUTO).
Confirm that the compressor clutch is not engaged (visual inspection).
(Discharge air and blower speed will depend on ambient, in-vehicle, and set temperatures.)

If OK (symptom cannot be duplicated), perform complete operational check (*2).
If NG (symptom is confirmed), continue with STEP-2 following.

2. Check for any service bulletins.
3. Check Main Power Supply and Ground Circuit. (*1)

OK

4. Go to A/C system circuit. (*4)

OK

5. Replace auto amp.
6. FINAL CHECK
   Go to self-diagnosis step-by-step procedure (*3) and perform self-diagnosis STEP-2.
   Confirm that code No. 20 is displayed.

SHA350F

*1: HA-45
*2: HA-42
*3: HA-32
*4: HA-46

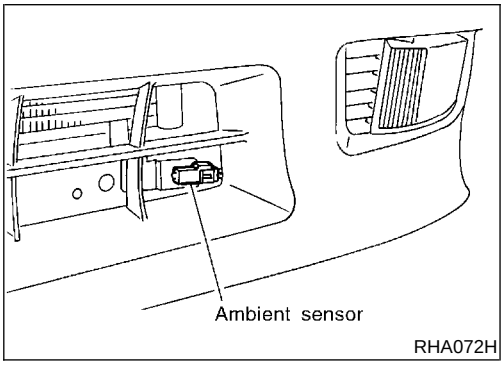

RHA072H

Ambient Sensor Circuit

COMPONENT DESCRIPTION

NCHA0039

The ambient sensor is attached in front of the driver's side condenser. It detects ambient temperature and converts it into a resistance value which is then input into the auto amplifier.

AMBIENT TEMPERATURE INPUT PROCESS

NCHA0040

The automatic amplifier includes a "processing circuit" for the ambient sensor input. However, when the temperature detected by the ambient sensor increases quickly, the processing circuit retards the auto amp. function. It only allows the auto amp. to recognize an ambient temperature increase of 0.33°C (0.6°F) per 100 seconds. As an example, consider stopping for a cup of coffee after high speed driving. Although the actual ambient temperature has not changed, the temperature detected by the ambient sensor will increase. This is because the heat from the engine compartment can radiate to the front grille area, location of the ambient sensor.

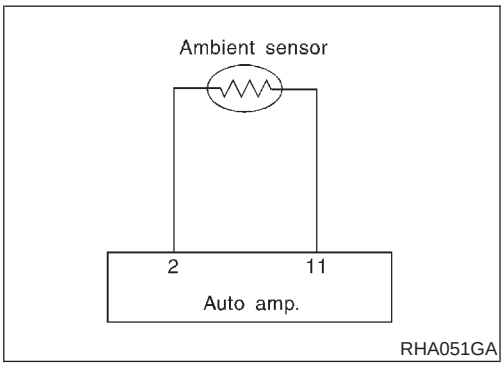

DIAGNOSTIC PROCEDURE

NCHA0041

SYMPTOM: Ambient sensor circuit is open or shorted. (21 or –21 is indicated on auto amp. as a result of conducting Self-diagnosis STEP 2.)

1	CHECK VOLTAGE BETWEEN AMBIENT SENSOR HARNESS CONNECTOR AND BODY GROUND	
Disconnect ambient sensor harness connector. Do approx. 5 volts exist between ambient sensor harness terminal No. 1 and body ground? 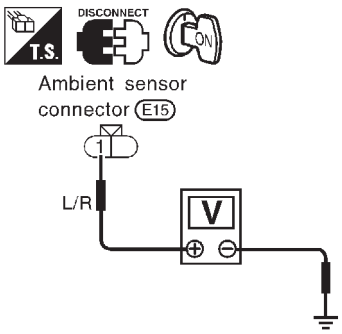 		
Yes or No		
Yes	▶	GO TO 2.
No	▶	GO TO 4.

2	CHECK AMBIENT SENSOR CIRCUIT BETWEEN AMBIENT SENSOR AND AUTO AMP. (LCU)

1. Disconnect auto amp. (LCU) harness connector.
2. Check circuit continuity between ambient sensor harness terminal No. 2 and auto amp. (LCU) harness terminal No. 11.
   Continuity should exist.

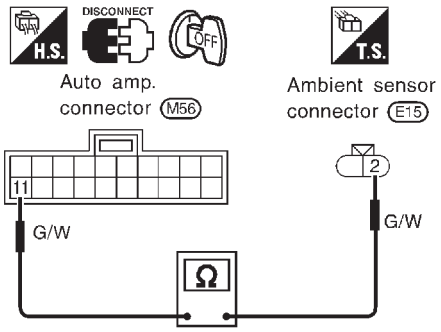

RHA475GB

OK or NG

OK	▶	GO TO 3.
NG	▶	Repair harness or connector.

3	CHECK AMBIENT SENSOR

Refer to HA-95.

OK or NG

OK	▶	1. Replace auto amp. (LCU). 2. Go to self-diagnosis step-by-step procedure (HA-32) and perform self-diagnosis STEP-2. Confirm that code No. 20 is displayed.
NG	▶	Replace ambient sensor.

4	CHECK AMBIENT SENSOR CIRCUIT BETWEEN AMBIENT SENSOR AND AUTO AMP. (LCU)

1. Disconnect auto amp. (LCU) harness connector.
2. Check circuit continuity between ambient sensor harness terminal No. 1 and auto amp. (LCU) harness terminal No. 2.
   Continuity should exist.

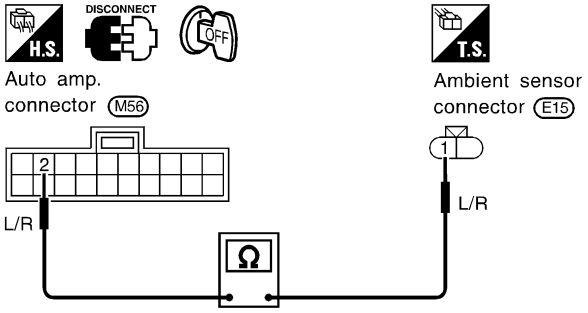

RHA906HB

OK or NG

OK	▶	1. Replace auto amp. (LCU). 2. Go to self-diagnosis step-by-step procedure (HA-32) and perform self-diagnosis STEP-2. Confirm that code No. 20 is displayed.
NG	▶	Repair harness or connector.

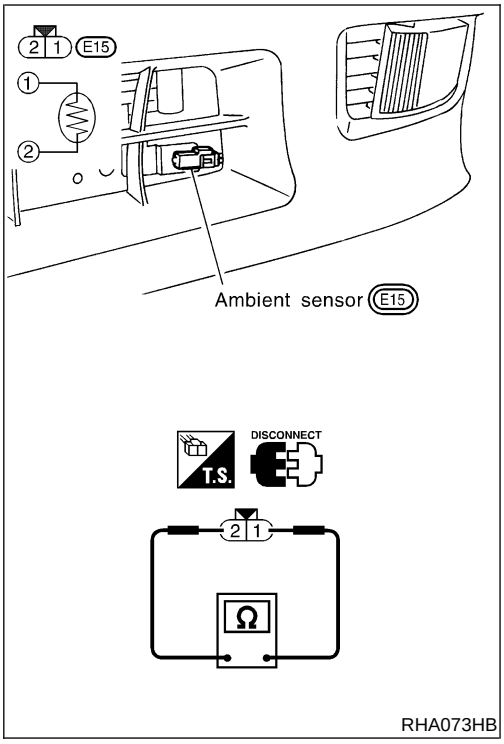

RHA073HB

ELECTRICAL COMPONENT INSPECTION

NCHA0042

Ambient Sensor

NCHA0042S01

After disconnecting ambient sensor harness connector, measure resistance between terminals 2 and 1 at sensor harness side, using the table below.

Temperature °C (°F)	Resistance kΩ
−15 (5)	12.73
−10 (14)	9.92
−5 (23)	7.80
0 (32)	6.19
5 (41)	4.95
10 (50)	3.99
15 (59)	3.24
20 (68)	2.65
25 (77)	2.19
30 (86)	1.81
35 (95)	1.51
40 (104)	1.27
45 (113)	1.07

If NG, replace ambient sensor.

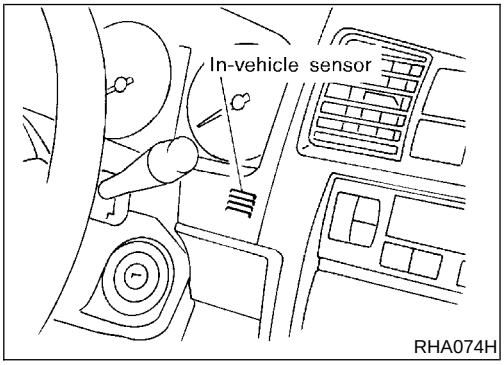

RHA074H

In-vehicle Sensor Circuit

COMPONENT DESCRIPTION

NCHA0043

In-vehicle sensor

NCHA0043S01

The in-vehicle sensor is located on instrument lower panel. It converts variations in temperature of compartment air drawn from the aspirator into a resistance value. It is then input into the auto amplifier.

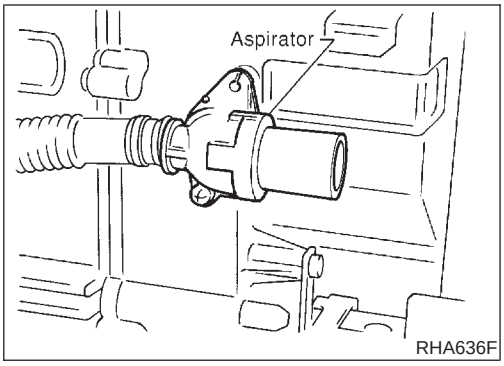

Aspirator

NCHA0043S02

The aspirator is located in front of heater unit. It produces vacuum pressure due to air discharged from the heater unit, continuously taking compartment air in the aspirator.

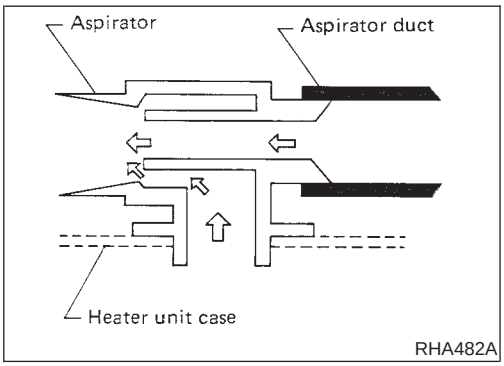

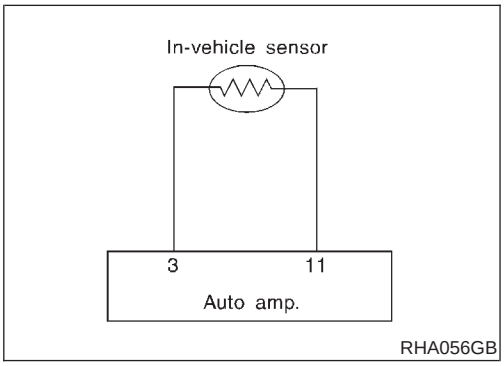

DIAGNOSTIC PROCEDURE

NCHA0044

SYMPTOM: In-vehicle sensor circuit is open or shorted. (22 or –22 is indicated on auto amp. as a result of conducting Self-diagnosis STEP 2.)

1	CHECK IN-VEHICLE SENSOR CIRCUIT BETWEEN IN-VEHICLE SENSOR AND BODY GROUND

Disconnect in-vehicle sensor harness connector.
Do approx. 5 volts exist between in-vehicle sensor harness terminal No. 1 and body ground?

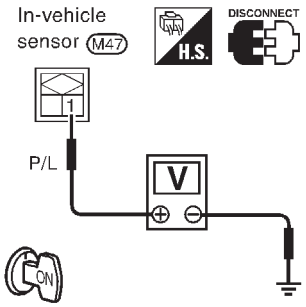

Yes or No

Yes	▶	GO TO 2.
No	▶	GO TO 4.

2	CHECK IN-VEHICLE SENSOR CIRCUIT BETWEEN IN-VEHICLE SENSOR AND AUTO AMP. (LCU)

1. Disconnect auto amp. (LCU) harness connector.
2. Check circuit continuity between in-vehicle sensor harness terminal No. 2 and auto amp. (LCU) harness terminal No. 11.

Continuity should exist.

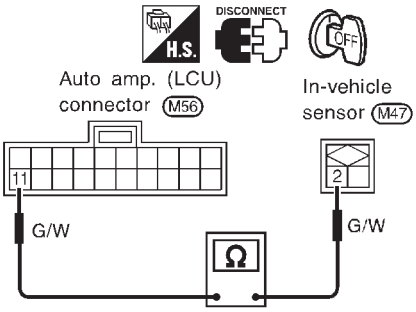

RHA478GB

OK or NG

OK	▶	GO TO 3.
NG	▶	Repair harness or connector.

3	CHECK IN-VEHICLE SENSOR

Refer to HA-98.

OK or NG

OK	▶	1. Replace auto amp. 2. Go to self-diagnosis step-by-step procedure (HA-32) and perform self-diagnosis STEP-2. Confirm that code No. 20 is displayed.
NG	▶	1. Replace in-vehicle sensor. 2. Go to self-diagnosis step-by-step procedure (HA-32) and perform self-diagnosis STEP-2. Confirm that code No. 20 is displayed.

4	CHECK IN-VEHICLE SENSOR CIRCUIT BETWEEN AMBIENT SENSOR AND AUTO AMP. (LCU)

1. Disconnect auto amp. (LCU) harness connector.
2. Check circuit continuity between in-vehicle sensor harness terminal No. 1 and auto amp. (LCU) harness terminal No. 3.
   Continuity should exist.

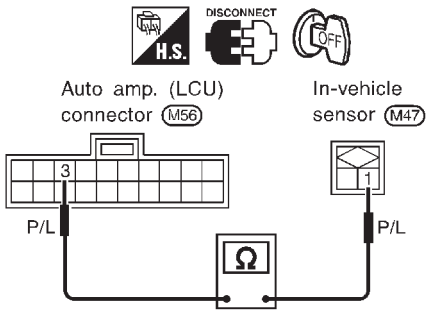

RHA479GB

OK or NG

OK ▶	1. Replace auto amp. (LCU). 2. Go to self-diagnosis step-by-step procedure (HA-32) and perform self-diagnosis STEP-2. Confirm that code No. 20 is displayed.
NG ▶	Repair harness or connector.

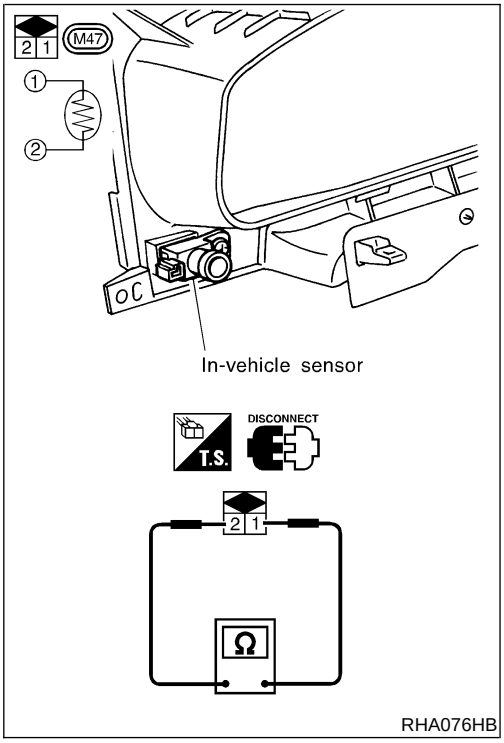

RHA076HB

ELECTRICAL COMPONENT INSPECTION

NCHA0045

In-vehicle Sensor

NCHA0045S01

After disconnecting in-vehicle sensor harness connector, measure resistance between terminals 1 and 2 at sensor harness side, using the table below.

Temperature °C (°F)	Resistance kΩ
−15 (5)	12.73
−10 (14)	9.92
−5 (23)	7.80
0 (32)	6.19
5 (41)	4.95
10 (50)	3.99
15 (59)	3.24
20 (68)	2.65
25 (77)	2.19
30 (86)	1.81

Temperature °C (°F)	Resistance kΩ
35 (95)	1.51
40 (104)	1.27
45 (113)	1.07

If NG, replace in-vehicle sensor.

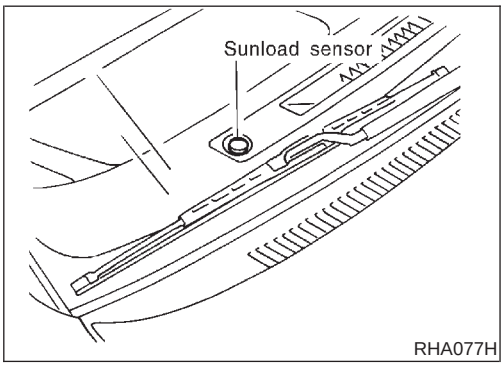

Sunload Sensor Circuit

COMPONENT DESCRIPTION

NCHA0046

The sunload sensor is located on the right defroster grille. It detects sunload entering through windshield by means of a photo diode. The sensor converts the sunload into a current value which is then input into the auto amplifier.

SUNLOAD INPUT PROCESS

NCHA0047

The auto amp. also includes a processing circuit which "average" the variations in detected sunload over a period of time. This prevents drastic swings in the ATC system operation due to small or quick variations in detected sunload.

For example, consider driving along a road bordered by an occasional group of large trees. The sunload detected by the sunload sensor will vary whenever the trees obstruct the sunlight. The processing circuit averages the detected sunload over a period of time, so that the (insignificant) effect of the trees momentarily obstructing the sunlight does not cause any change in the ATC system operation. On the other hand, shortly after entering a long tunnel, the system will recognize the change in sunload, and the system will react accordingly.

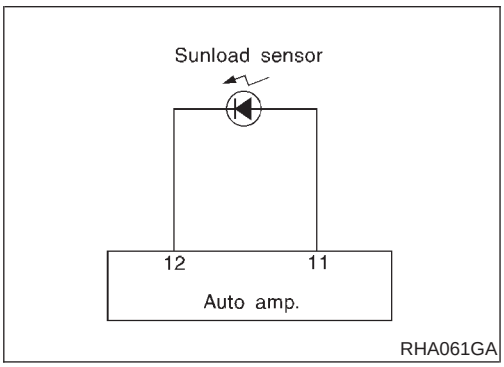

DIAGNOSTIC PROCEDURE

NCHA0048

SYMPTOM: Sunload sensor circuit is open or shorted. (25 or –25 is indicated on auto amp. as a result of conducting Self-diagnosis STEP 2.)

1	CHECK SUNLOAD SENSOR CIRCUIT BETWEEN SUNLOAD SENSOR AND BODY GROUND

Disconnect sunload sensor harness connector.
Do approx. 5 volts exist between sunload sensor harness terminal No. 1 and body ground?

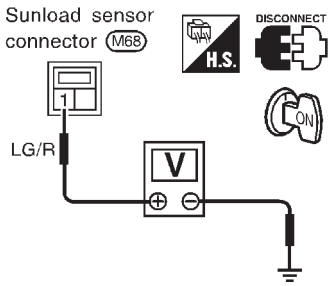

RHA062GC

Yes or No

Yes	▶	GO TO 2.
No	▶	GO TO 4.

2	CHECK SUNLOAD SENSOR CIRCUIT BETWEEN SUNLOAD SENSOR AND AUTO AMP. (LCU)

1. Disconnect auto amp. (LCU) harness connector.
2. Check circuit continuity between sunload sensor harness terminal No. 2 and auto amp. (LCU) harness terminal No. 11.
   Continuity should exist.

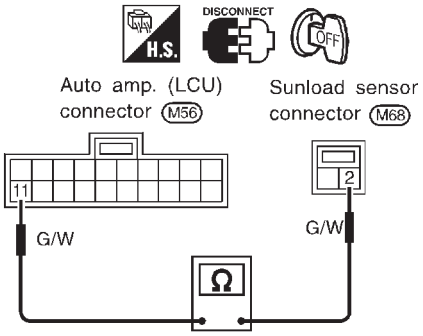

RHA483GB

OK or NG

OK	▶	GO TO 3.
NG	▶	Repair harness or connector.

3	CHECK SUNLOAD SENSOR.

Refer to HA-101.

OK or NG

OK	▶	1. Replace auto amp. (LCU). 2. Go to self-diagnosis step-by-step procedure (HA-32) and perform self-diagnosis STEP-2. Confirm that code No. 20 is displayed.
NG	▶	1. Replace sunload sensor. 2. Go to self-diagnosis step-by-step procedure (HA-32) and perform self-diagnosis STEP-2. Confirm that code No. 20 is displayed.

4	CHECK SUNLOAD SENSOR CIRCUIT BETWEEN SUNLOAD SENSOR AND AUTO AMP. (LCU)	
1. Disconnect auto amp. (LCU) harness connector. 2. Check circuit continuity between sunload sensor harness terminal No. 1 and auto amp. (LCU) harness terminal No. 12. **Continuity should exist.** 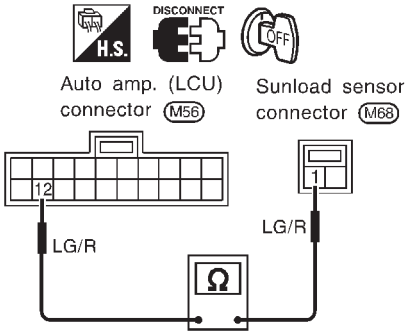 RHA484GB **OK or NG**		
OK	▶	1. Replace auto amp. 2. Go to self-diagnosis step-by-step procedure (HA-32) and perform self-diagnosis STEP-2. Confirm that code No. 20 is displayed.
NG	▶	Repair harness or connector.

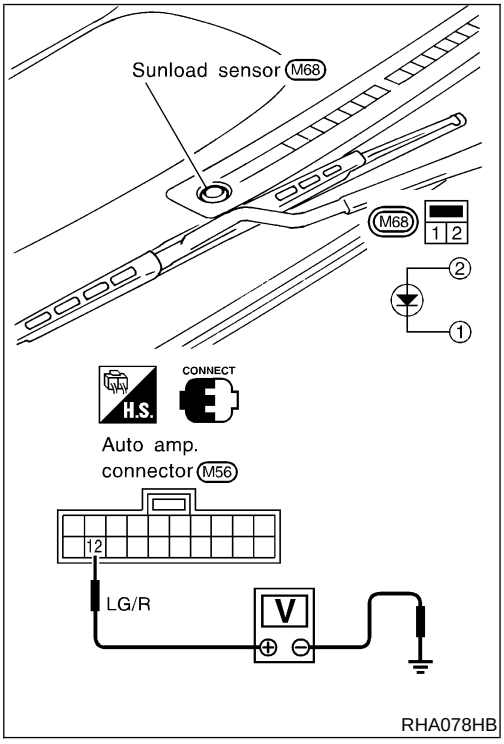

ELECTRICAL COMPONENT INSPECTION

NCHA0049

Sunload Sensor

NCHA0049S01

Measure voltage between auto amp. terminal 12 and body ground.
If NG, replace sunload sensor.

- **When checking sunload sensor, select a place where sun shines directly on it.**

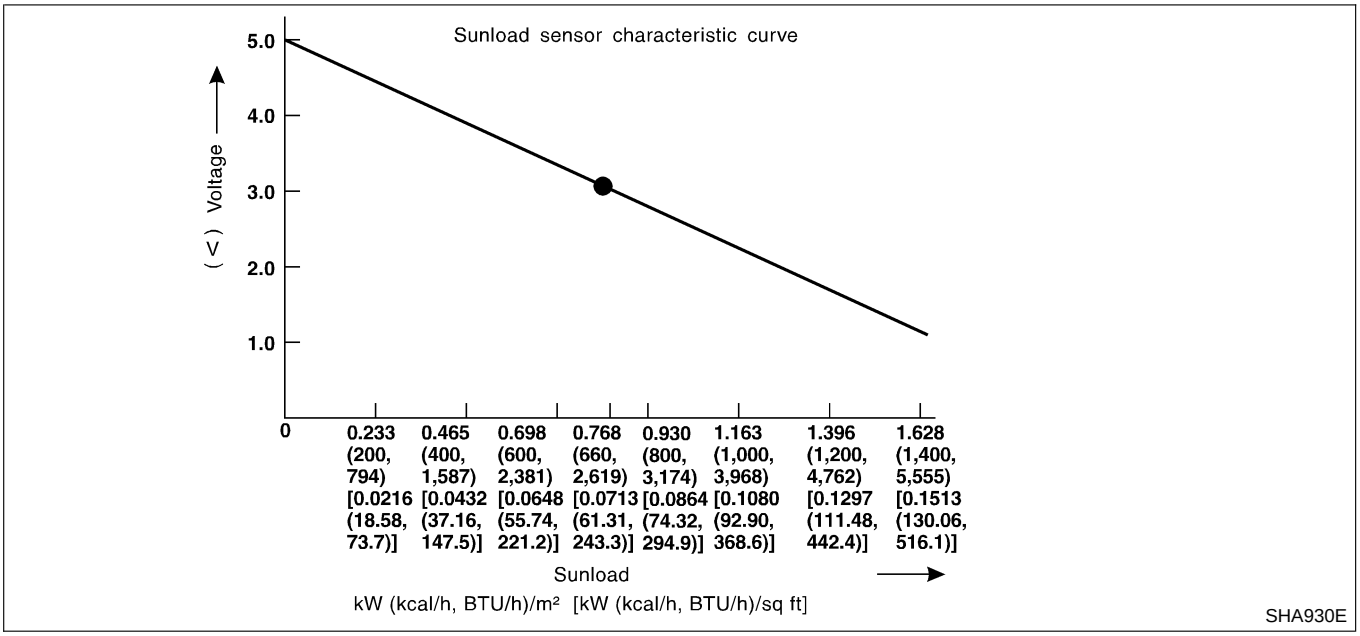

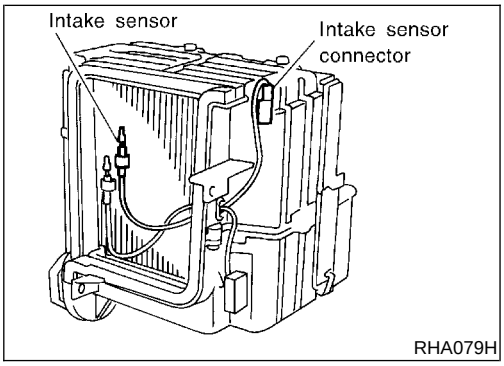

Intake Sensor Circuit

COMPONENT DESCRIPTION

NCHA0105

Intake Sensor

NCHA0105S01

The intake sensor is located on the cooling unit. It converts temperature of air after it passes through the evaporator into a resistance value which is then input to the auto amp.

After disconnecting intake sensor harness connector, measure resistance between terminals 1 and 2 at sensor harness side, using the table below.

Temperature °C (°F)	Resistance kΩ
−15 (5)	12.73
−10 (14)	9.92
−5 (23)	7.80
0 (32)	6.19
5 (41)	4.95
10 (50)	3.99
15 (59)	3.24
20 (68)	2.65
25 (77)	2.19
30 (86)	1.81
35 (95)	1.51
40 (104)	1.27
45 (113)	1.07

If NG, replace intake sensor.

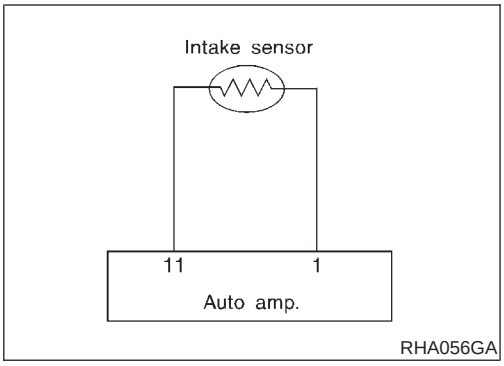

DIAGNOSTIC PROCEDURE

NCHA0106

SYMPTOM: Intake sensor circuit is open or shorted. (24 or –24 is indicated on auto amp. as a result of conducting Self-diagnosis STEP 2.)

1	CHECK INTAKE SENSOR CIRCUIT BETWEEN INTAKE SENSOR AND BODY GROUND

Disconnect intake sensor harness connector.
Do approx. 5 volts exist between intake sensor harness terminal No. 2 and body ground?

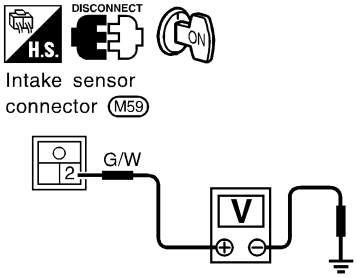

Yes or No

Yes	▶	GO TO 2.
No	▶	GO TO 4.

2	CHECK INTAKE SENSOR CIRCUIT BETWEEN INTAKE SENSOR AND AUTO AMP. (LCU)

1. Disconnect auto amp. (LCU) harness connector.
2. Check circuit continuity between intake sensor harness terminal No. 2 and auto amp. (LCU) harness terminal No. 11.
   Continuity should exist.

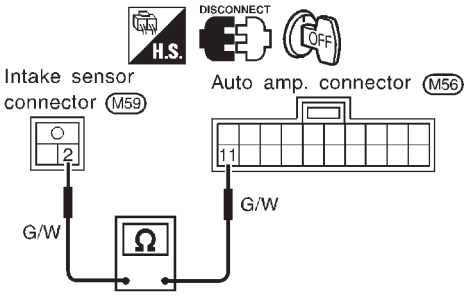

OK or NG

OK	▶	GO TO 3.
NG	▶	Repair harness or connector.

3	CHECK INTAKE SENSOR	
Refer to HA-102.		
	OK or NG	
OK	▶	1. Replace auto amp. 2. Go to self-diagnosis step-by-step procedure (HA-32) and perform self-diagnosis STEP-2. Confirm that code No. 20 is displayed.
NG	▶	1. Replace intake sensor. 2. Go to self-diagnosis step-by-step procedure (HA-32) and perform self-diagnosis STEP-2. Confirm that code No. 20 is displayed.

4	CHECK INTAKE SENSOR CIRCUIT BETWEEN AMBIENT SENSOR AND AUTO AMP. (LCU)	
1. Disconnect auto amp. (LCU) harness connector. 2. Check circuit continuity between intake sensor harness terminal No. 1 and auto amp. (LCU) harness terminal No. 1. **Continuity should exist.**		
	OK or NG	
OK	▶	1. Replace auto amp. 2. Go to self-diagnosis step-by-step procedure (HA-32) and perform self-diagnosis STEP-2. Confirm that code No. 20 is displayed.
NG	▶	Repair harness or connector.

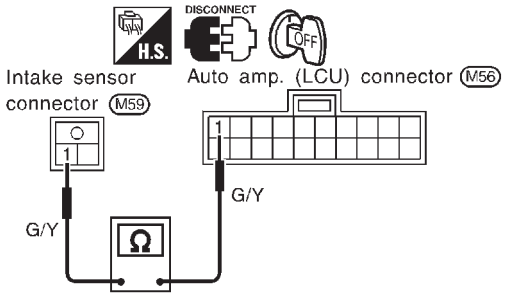

RHA497GB

Air Mix Door Motor PBR Circuit

DIAGNOSTIC PROCEDURE

NCHA0050

For description of mode door motor and air mix door motor circuit, refer to HA-50.

SYMPTOM: If PBR circuit is open or shorted. (–26 or 26 is indicated on auto amp. as a result of conducting Self-diagnosis STEP 2.)

Perform diagnostic procedure for mode door motor and air mix door motor. Refer to HA-50.

HFC-134a (R-134a) Service Procedure

NCHA0070

SETTING OF SERVICE TOOLS AND EQUIPMENT

NCHA0070S01

Discharging Refrigerant

NCHA0070S0101

WARNING:

Avoid breathing A/C refrigerant and lubricant vapor or mist. Exposure may irritate eyes, nose and throat. Remove HFC-134a (R-134a) from A/C system using certified service equipment meeting requirements of SAE J2210 (R-134a recycling equipment) or J2209 (R-134a recovery equipment). If accidental system discharge occurs, ventilate work area before resuming service. Additional health and safety information may be obtained from refrigerant and lubricant manufacturers.

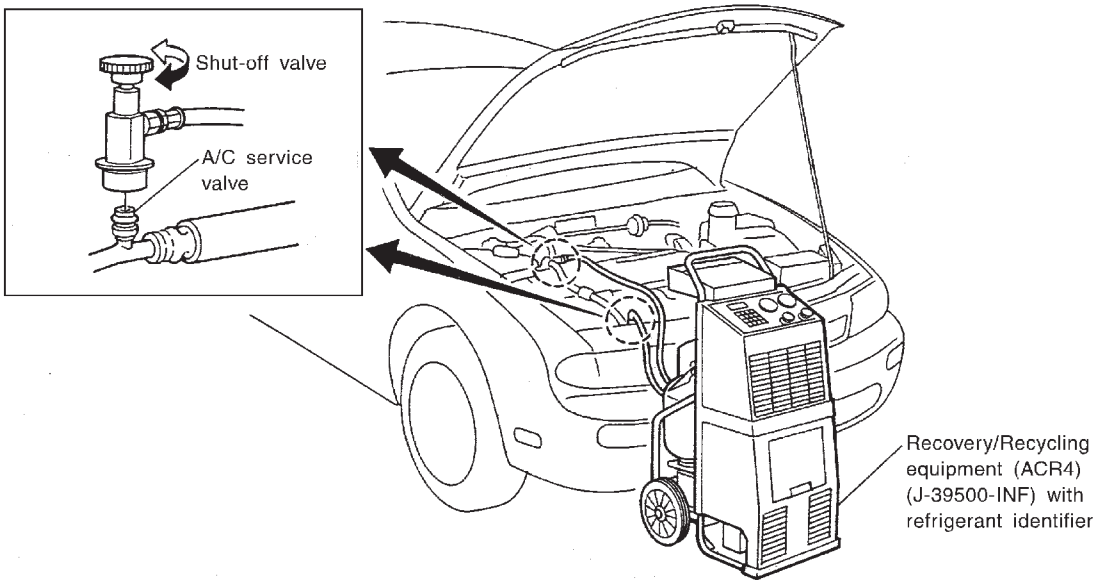

SHA179FA

Evacuating System and Charging Refrigerant

NCHA0070S0102

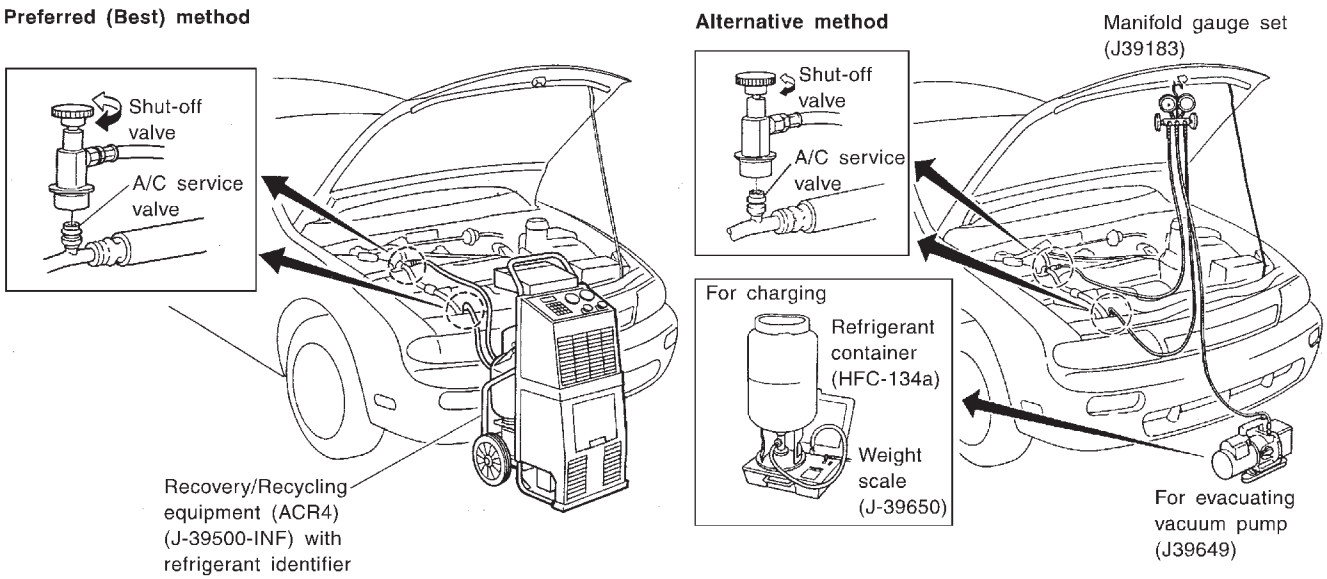

SHA180FA

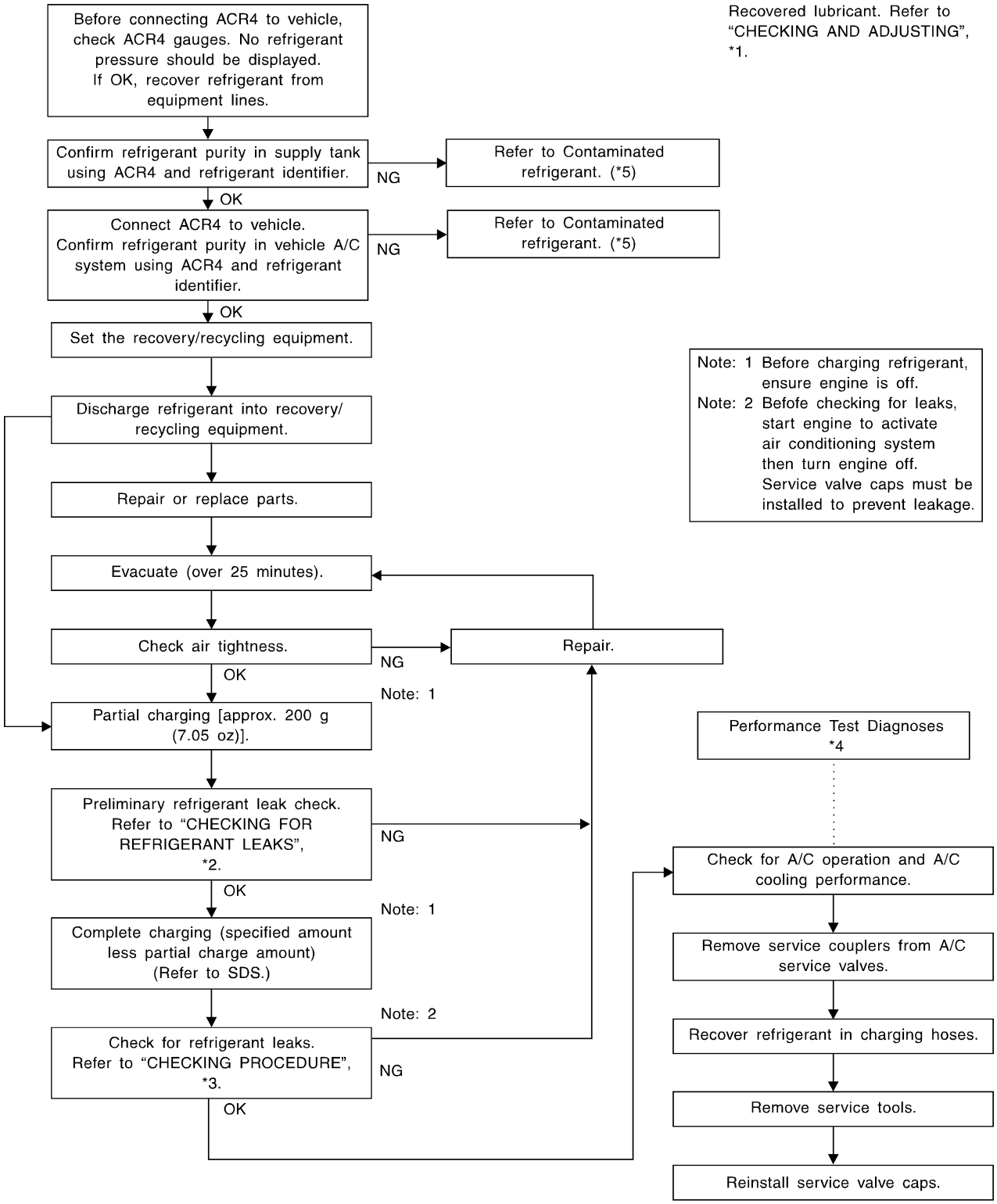

*1: HA-107
*2: HA-118
*3: HA-120
*4: HA-81
*5: HA-3

Maintenance of Lubricant Quantity in Compressor

NCHA0071

The lubricant in the compressor circulates through the system with the refrigerant. Add lubricant to compressor when replacing any component or after a large gas leakage occurred. It is important to maintain the specified amount.
If lubricant quantity is not maintained properly, the following malfunctions may result:

- Lack of lubricant: May lead to a seized compressor
- Excessive lubricant: Inadequate cooling (thermal exchange interference)

LUBRICANT

NCHA0071S01

Name: Nissan A/C System Oil Type R
Part number: KLH00-PAGR0

CHECKING AND ADJUSTING

NCHA0071S02

Adjust the lubricant quantity according to the test group shown below.

1	CHECK LUBRICANT RETURN OPERATION	
Can lubricant return operation be performed? ● A/C system works properly. ● There is no evidence of a large amount of lubricant leakage.		
	Yes or No	
Yes	▶	GO TO 2.
No	▶	GO TO 3.

2	PERFORM LUBRICANT RETURN OPERATION, PROCEEDING AS FOLLOWS:	
1. Start engine, and set the following conditions: ● **Test condition** **Engine speed: Idling to 1,200 rpm** **A/C or AUTO switch: ON** **Blower speed: Max. position** **Temp. control: Optional [Set so that intake air temperature is 25 to 30°C (77 to 86°F).]** 2. Perform lubricant return operation for about 10 minutes. 3. Stop engine. **CAUTION:** **If excessive lubricant leakage is noted, do not perform the lubricant return operation.**		
OK	▶	GO TO 3.

3	CHECK COMPRESSOR	
Should the compressor be replaced?		
	Yes or No	
Yes	▶	Go to “Lubricant Adjustment Procedure for Compressor Replacement”, (HA-109).
No	▶	GO TO 4.

4	CHECK ANY PART	
Is there any part to be replaced? (Evaporator, condenser, liquid tank or in case there is evidence of a large amount of lubricant leakage.)		
	Yes or No	
Yes	▶	Go to "Lubricant Adjusting Procedure for Components Replacement Except Compressor", (HA-109).
No	▶	Carry out the A/C performance test.

Lubricant Adjusting Procedure for Components Replacement Except Compressor

=NCHA0071S0201

After replacing any of the following major components, add the correct amount of lubricant to the system.

Amount of lubricant to be added

Part replaced	Lubricant to be added to system	Remarks
	Amount of lubricant mℓ (US fl oz, Imp fl oz)	
Evaporator	75 (2.5, 2.6)	—
Condenser	75 (2.5, 2.6)	—
Liquid tank	5 (0.2, 0.2)	Add if compressor is not replaced. *1
In case of refrigerant leak	30 (1.0, 1.1)	Large leak
	—	Small leak *2

*1: If compressor is replaced, addition of lubricant is included in the table.

*2: If refrigerant leak is small, no addition of lubricant is needed.

Lubricant Adjusting Procedure for Compressor Replacement

NCHA0071S0202

1. Before connecting ACR4 to vehicle, check ACR4 gauges. No refrigerant pressure should be displayed. If NG, recover refrigerant from equipment lines.
2. Connect ACR4 to vehicle. Confirm refrigerant purity in supply tank using ACR4 and refrigerant identifier. If NG, refer to "CONTAMINATED REFRIGERANT", HA-3.
3. Confirm refrigerant purity in vehicle A/C system using ACR4 and refrigerant identifier. If NG, refer to "CONTAMINATED REFRIGERANT", HA-3.
4. Discharge refrigerant into the refrigerant recovery/recycling equipment. Measure lubricant discharged into the recovery/recycling equipment.
5. Drain the lubricant from the "old" (removed) compressor into a graduated container and recover the amount of lubricant drained.
6. Drain the lubricant from the "new" compressor into a separate, clean container.
7. Measure an amount of new lubricant installed equal to amount drained from "old" compressor. Add this lubricant to "new" compressor through the suction port opening.
8. Measure an amount of new lubricant equal to the amount recovered during discharging. Add this lubricant to "new" compressor through the suction port opening.
9. If the liquid tank also needs to be replaced, add an additional 5 mℓ (0.2 US fl oz, 0.2 Imp fl oz) of lubricant at this time.
   Do not add this 5 mℓ (0.2 US fl oz, 0.2 Imp fl oz) of lubricant if only replacing the compressor.

Lubricant adjusting procedure for compressor replacement

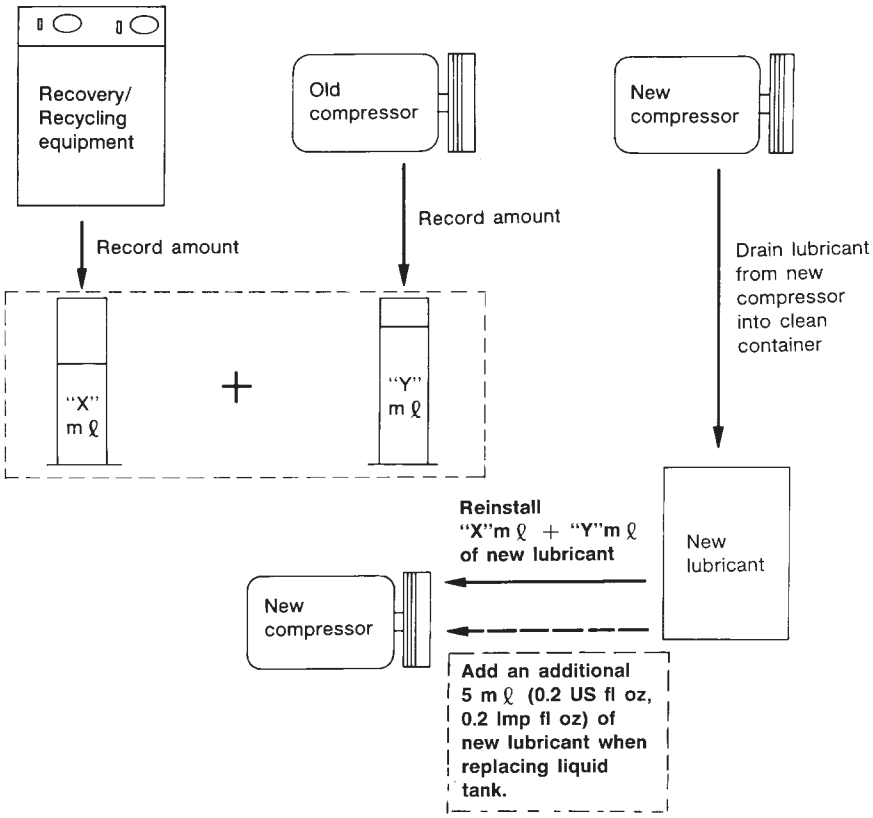

RHA065DD

Compressor

REMOVAL AND INSTALLATION

NCHA0072

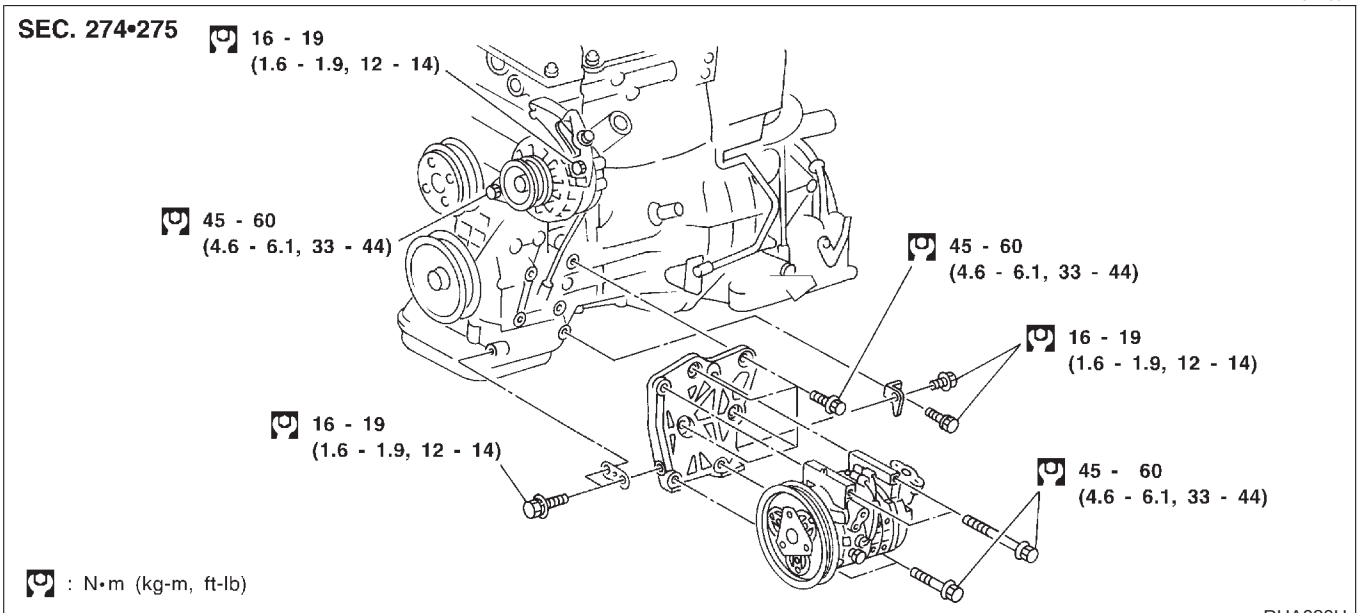

RHA080H

Compressor Clutch

OVERHAUL

NCHA0073

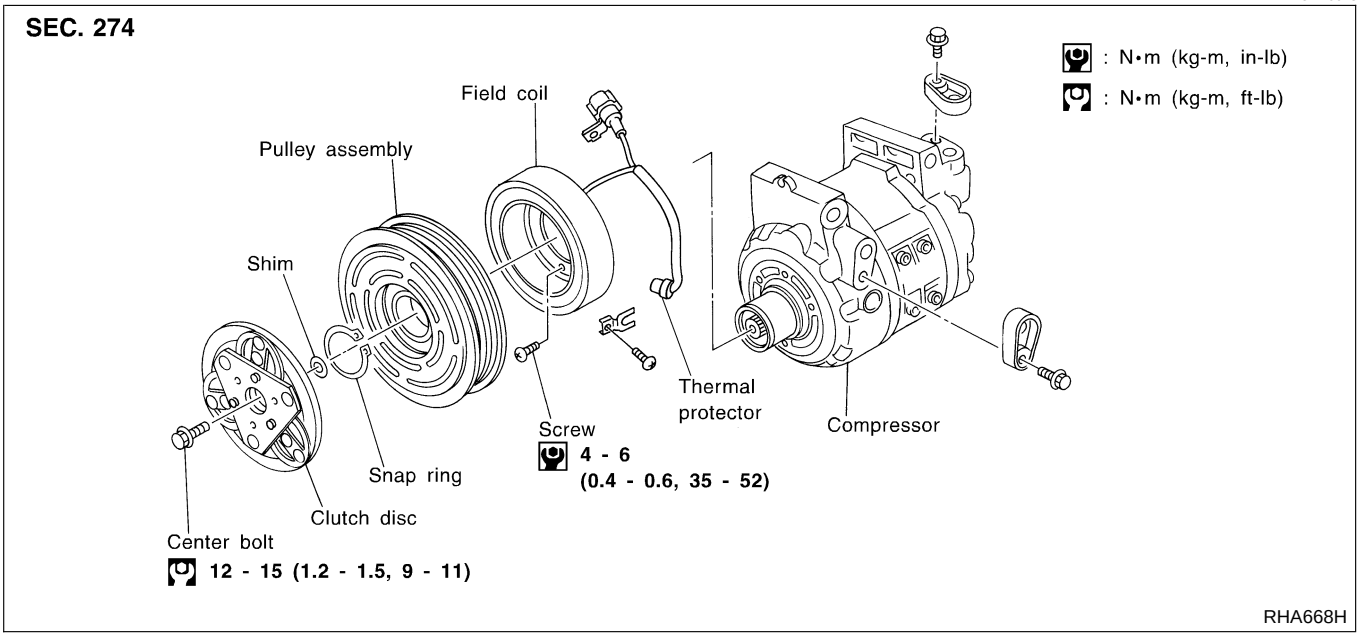

REMOVAL

NCHA0074

- When removing center bolt, hold clutch disc with clutch disc wrench.

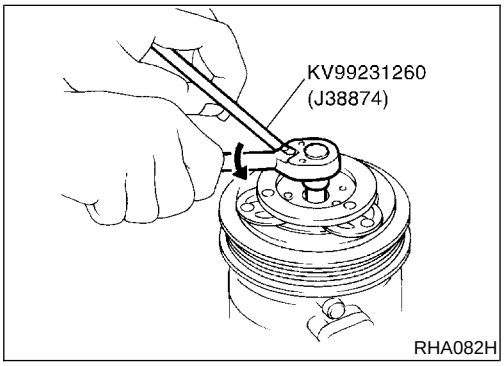

- Remove the drive plate using the clutch disc puller.
  Insert holder's three pins into the drive plate. Rotate the holder clockwise to hook it onto the plate. Tighten the center bolt to remove the drive plate.
  While tightening the center bolt, insert a screwdriver between two of the pins (as shown in the figure) to prevent rotation.
  After removing the drive plate, remove the shims from either the drive shaft or the drive plate.

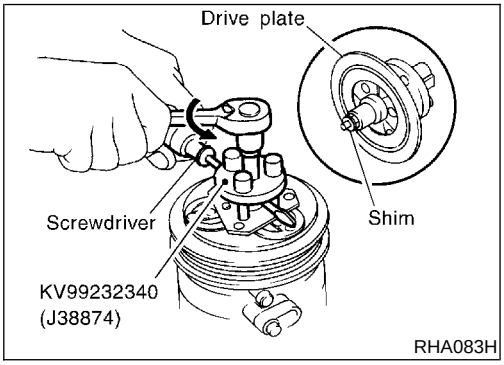

- Remove the snap ring using external snap ring pliers.

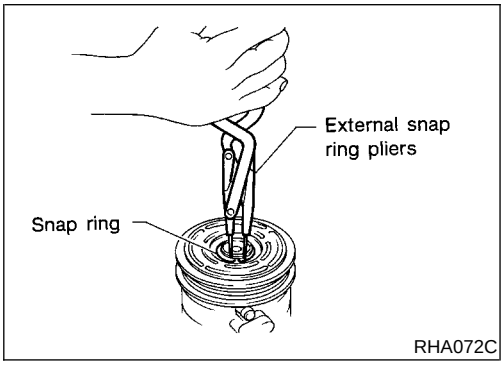

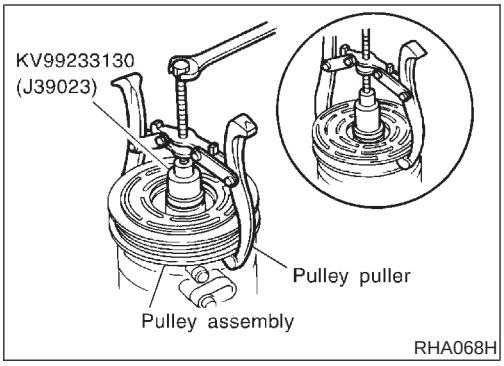

- Pulley removal:
  Use a commercially available pulley puller. Position the center of the puller on the end of the drive shaft. Remove the pulley assembly with the puller.
  For pressed pulleys:
  To prevent deformation of the pulley groove, the puller claws should be hooked under (not into) the pulley groove.
  For machine latched pulleys:
  Align the pulley puller groove with the pulley groove, and then remove the pulley assembly.
- Remove the field coil harness clip using a screwdriver.
- Remove the three field coil fixing screws and remove the field coil.

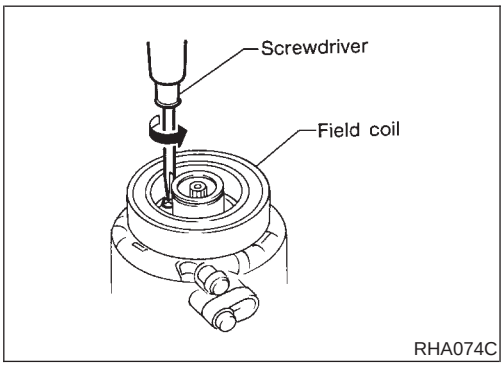

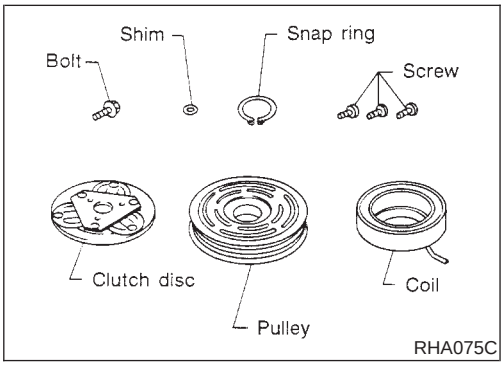

INSPECTION

NCHA0075

Clutch Disc

NCHA0075S01

If the contact surface shows signs of damage due to excessive heat, replace clutch disc and pulley.

Pulley

NCHA0075S02

Check the appearance of the pulley assembly. If contact surface of pulley shows signs of excessive grooving, replace clutch disc and pulley. The contact surfaces of the pulley assembly should be cleaned with a suitable solvent before reinstallation.

Coil

NCHA0075S03

Check coil for loose connection or cracked insulation.

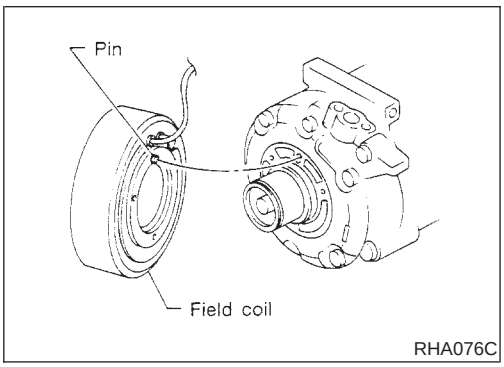

INSTALLATION

NCHA0076

- Install the field coil.
  Be sure to align the coil pin with the hole in the compressor front head.
- Install the field coil harness clip using a screwdriver.

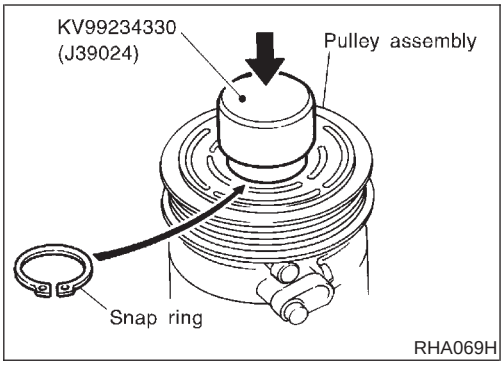

- Install the pulley assembly using the installer and a hand press, and then install the snap ring using snap ring pliers.

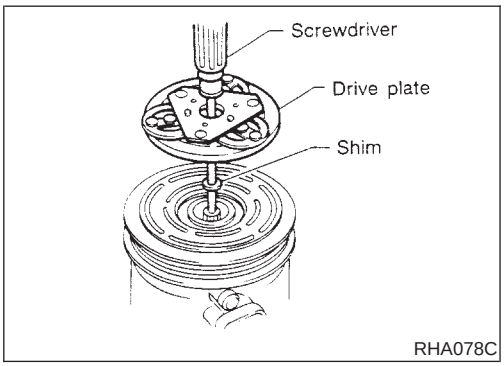

- Install the drive plate on the drive shaft, together with the original shim(s). Press the drive plate down by hand.

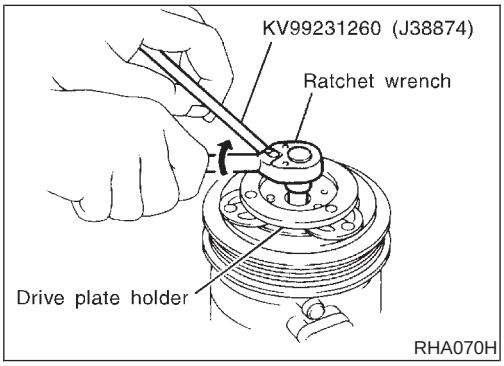

- Using the holder to prevent drive plate rotation, tighten the bolt to 12 to 15 N·m (1.2 to 1.5 kg-m, 9 to 11 ft-lb) torque.
- **After tightening the bolt, check that the pulley rotates smoothly.**

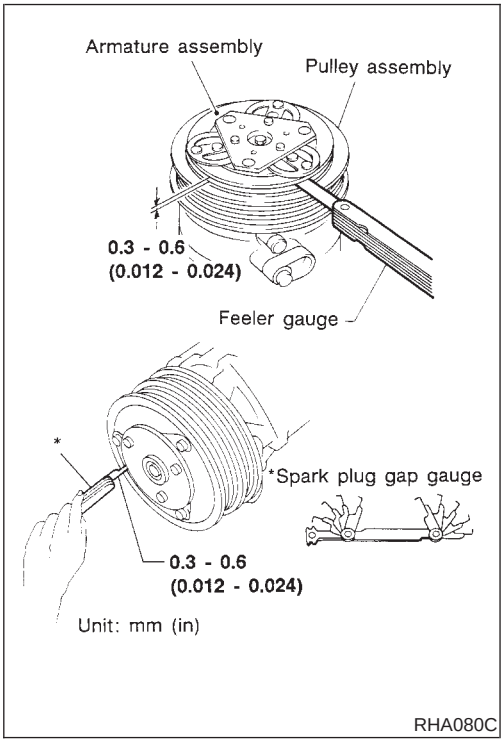

- Check clearance all the way around the clutch disc.

  Disc-to-pulley clearance:

  0.3 - 0.6 mm (0.012 - 0.024 in)

  If the specified clearance is not obtained, replace adjusting spacer and readjust.

Break-in Operation

NCHA0076S01

When replacing compressor clutch assembly, always conduct the break-in operation. This is done by engaging and disengaging the clutch about thirty times. Break-in operation raises the level of transmitted torque.

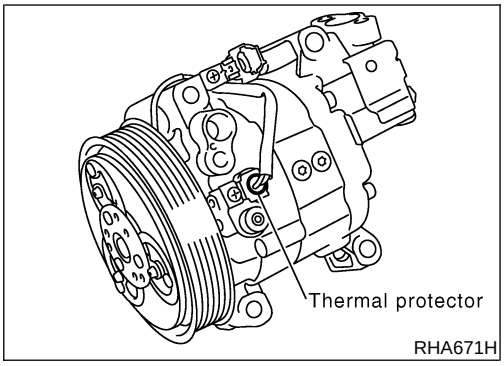

Thermal Protector

INSPECTION

NCHA0108

- When servicing, do not allow foreign matter to enter compressor.
- Check continuity between compressor harness terminal and field coil.

Heater Unit (Heater Core)

REMOVAL

NCHA0183

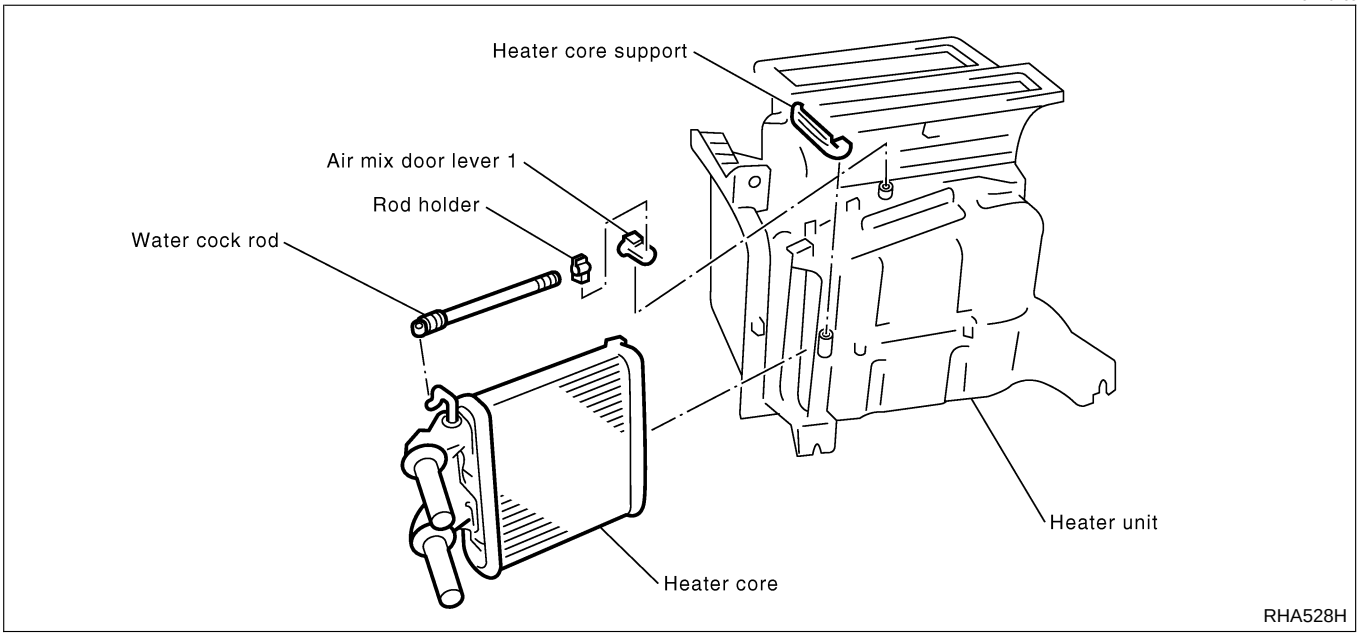

1. Drain the cooling system. Refer to MA-14, “Changing Engine Coolant”.
2. Discharge the A/C system. Refer to HA-105.
3. Disconnect the two heater hoses from inside the engine compartment.
4. Remove the cooling unit. Refer to HA-116.
5. Remove the steering member assembly. Refer to BT-23, “Instrument Panel Assembly”.
6. Remove the heater unit.
7. Remove the heater core.

INSTALLATION

NCHA0184

Install in the reverse order of removal.

When filling radiator with coolant, refer to MA-14, “Changing Engine Coolant”.

Recharge the A/C system. Refer to HA-105.

Blower Unit

REMOVAL

NCHA0185

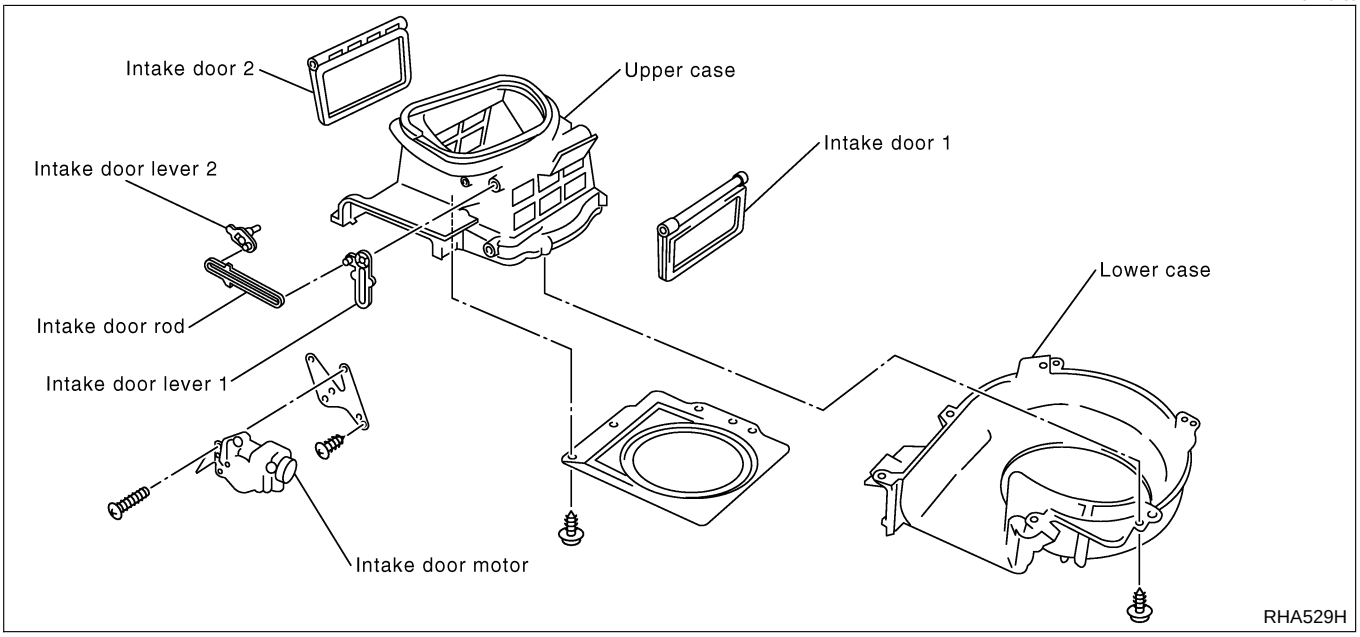

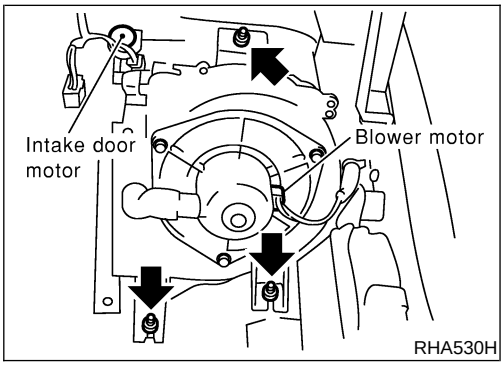

1. Discharge the A/C system. Refer to HA-105.
2. Disconnect the two refrigerant lines from the engine compartment.
   Cap the A/C lines to prevent moisture from entering the system.
3. Remove the glove box and mating trim. Refer to BT-23, “Instrument Panel Assembly”.
4. Remove cooling unit. Refer to HA-116.
5. Disconnect the intake door motor and blower motor connector.
6. Remove blower unit.
7. Remove the three bolts and then remove the motor from the blower case.

INSTALLATION

NCHA0186

Install in the reverse order of removal.
Recharge the A/C system. Refer to HA-105.

Cooling Unit (A/C Evaporator)

REMOVAL

NCHA0187

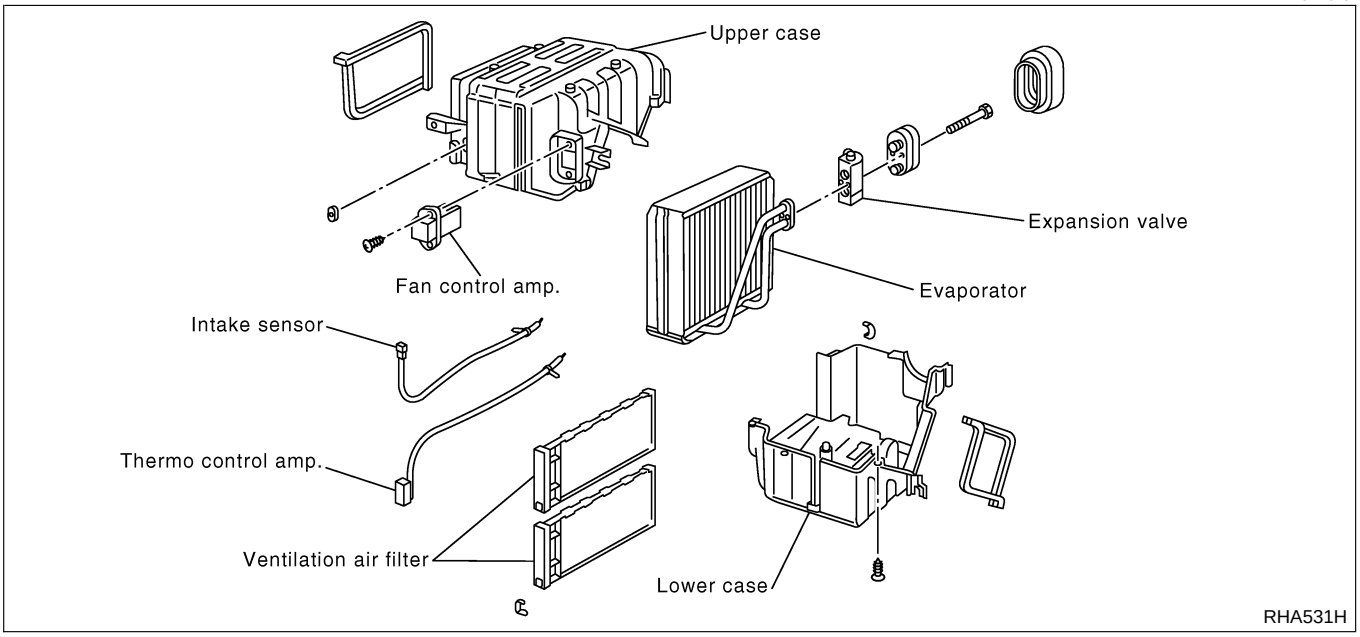

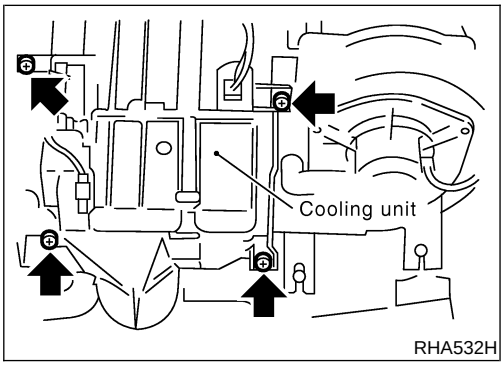

1. Discharge the A/C system. Refer to HA-105.
2. Disconnect the two refrigerant lines from the engine compartment.
   Cap the A/C lines to prevent moisture from entering the system.
3. Remove the glove box and mating trim. Refer to BT-23, “Instrument Panel Assembly”.
4. Disconnect the thermo control amp. and intake sensor connector.
5. Disconnect the fan control amp. connector.
6. Remove the cooling unit.
7. Separate the cooling unit case, and remove the evaporator.

INSTALLATION

NCHA0188

Install in the reverse order of removal.
Recharge the A/C system. Refer to HA-105.

Refrigerant Lines

REMOVAL AND INSTALLATION

=NCHA0077

- Refer to page HA-5 regarding “Precautions for Refrigerant Connection”.

SEC. 271•274•276

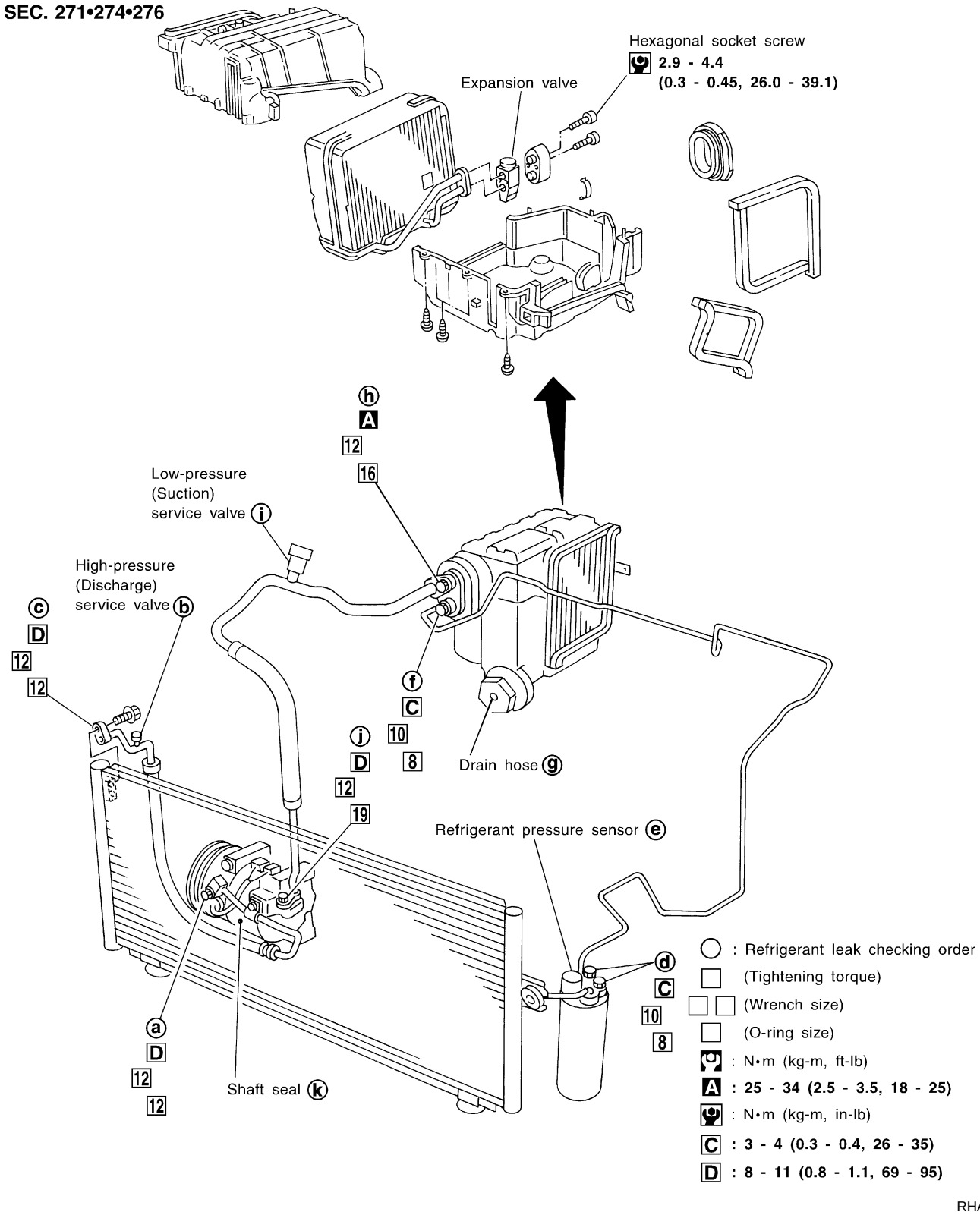

CHECKING FOR REFRIGERANT LEAKS

=NCHA0202

- Perform a visual inspection of all refrigeration parts, fittings, hoses and components for signs of A/C lubricant leakage, damage and corrosion. A/C lubricant leakage may indicate an area of refrigerant leakage. Allow extra inspection time in these areas when using either an electronic refrigerant leak detector or fluorescent dye leak detector.
- If dye is observed, confirm the leak with an electronic refrigerant leak detector. It is possible a prior leak was repaired and not properly cleaned.
- When searching for leaks, do not stop when one leak is found but continue to check for additional leaks at all system components and connections.
- When searching for refrigerant leaks using an electronic leak detector, move the probe along the suspected leak area at 1 to 2 inches per second and no further than 1/4 inch from the component.

NOTE:
Moving the electronic leak detector probe slower and closer to the suspected leak area will improve the chances of finding a leak.

CHECKING SYSTEM FOR LEAKS USING THE FLUORESCENT LEAK DETECTOR

NCHA0203

1. Check A/C system for leaks using the UV lamp and safety glasses (J-42220) in a low sunlight area (area without windows preferable). Illuminate all components, fittings and lines. The dye will appear as a bright green/yellow area at the point of leakage. Fluorescent dye observed at the evaporator drain opening indicates an evaporator core assembly (tubes, core or TXV) leak.
2. If the suspected area is difficult to see, use an adjustable mirror or wipe the area with a clean shop rag or cloth, then check the cloth with the UV lamp for dye residue.
3. After the leak is repaired, remove any residual dye using dye cleaner (J-43872) or prevent future misdiagnosis.
4. Perform a system performance check and verify the leak repair with an approved electronic refrigerant leak detector.

NOTE:

- **Other gases in the work area or substances on the A/C components, for example, anti-freeze, windshield washer fluid, solvents and lubricants, may falsely trigger the leak detector. Make sure the surfaces to be checked are clean. Clean with a dry cloth or blow off with shop air.**
- **Do not allow the sensor tip of the detector to contact with any substance. This can also cause false readings and may damage the detector.**

DYE INJECTION

NCHA0204

(This procedure is only necessary when re-charging the system or when the compressor has seized and was replaced.)

1. Check A/C system static (at rest) pressure. Pressure must be at least 345 kPa (3.5 kg/cm^2, 50 psi).
2. Pour one bottle (1/4 ounce/7.4 cc) of the A/C refrigerant dye into the injector tool (J-41459).
3. Connect the injector tool to the A/C LOW PRESSURE side sevice fitting.
4. Start engine and switch A/C ON.

5. With the A/C operating (compressor running), inject one bottle (1/4 ounce/7.4 cc) of fluorescent dye through the low-pressure service valve using dye injector tool J-41459 (refer to the manufacture's operating instructions).
6. With the engine still running, disconnect the injector tool from the service fitting.

CAUTION:
Be careful not to allow dye to spray or drip when disconnecting the injector from the system.

NOTE:
If repairing the A/C system or replacing a component, pour the dye directly into the open system connection and proceed with the service procedures.

7. Operate the A/C system for a minimum of 20 minutes to mix the dye with the system oil. Depending on the leak size, operating conditions and location of the leak, it may take from minutes to days for the dye to penetrate a leak and become visible.

ELECTRONIC REFRIGERANT LEAK DETECTOR

NCHA0205

Precautions for Handling Leak Detector

NCHA0205S01

When performing a refrigerant leak check, use a J-41995 A/C leak detector or equivalent. Ensure that the instrument is calibrated and set properly per the operating instructions.
The leak detector is a delicate device. In order to use the leak detector properly, read the operating instructions and perform any specified maintenance.

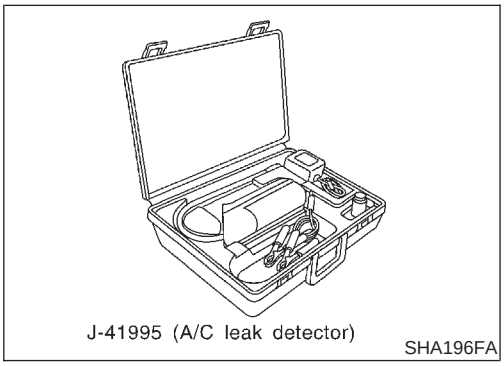
J-41995 (A/C leak detector)
SHA196FA

1. Position probe approximately 5 mm (3/16 in) away from point to be checked.

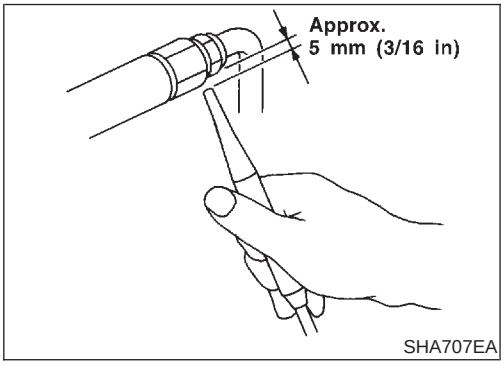

SHA707EA

2. When testing, circle each fitting completely with probe.

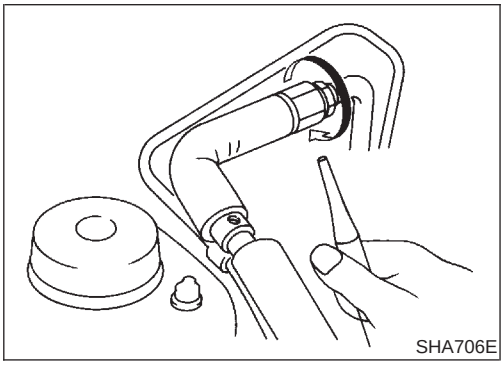
SHA706E

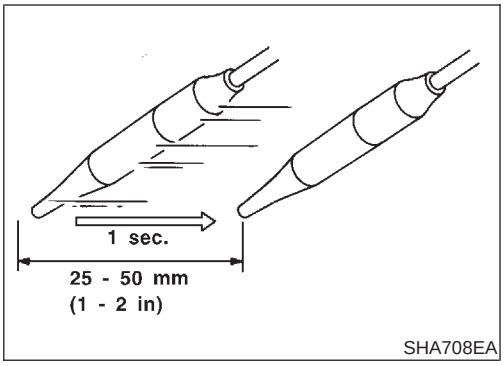

3. Move probe along component approximately 25 to 50 mm (1 to 2 in)/sec.

Checking Procedure

NCHA0205S02

To prevent inaccurate or false readings, make sure there is no refrigerant vapor, shop chemicals, or cigarette smoke in the vicinity of the vehicle. Perform the leak test in calm area (low air/wind movement) so that the leaking refrigerant is not dispersed.

1. Turn engine off.
2. Connect a suitable A/C manifold gauge set to the A/C service ports.
3. Check if the A/C refrigerant pressure is at least 345 kPa (3.52 kg/cm^2, 50 psi) above 16°C (61°F). If less than specification, recover/evacuate and recharge the system with the specified amount of refrigerant.

NOTE:
At temperatures below 16°C (61°F), leaks may not be detected since the system may not reach 345 kPa (3.52 kg/cm^2, 50 psi).

4. Conduct the leak test from the high side (compressor discharge **a** to evaporator inlet **f**) to the low side (evaporator drain hose **g** to shaft seal **k**). Refer to HA-117. Perform a leak check for the following areas carefully. Clean the component to be checked and move the leak detector probe completely around the connection/component.

- **Compressor**
  Check the fitting of high and low pressure hoses, relief valve and shaft seal.
- **Liquid tank**
  Check the pressure switch, tube fitting, weld seams and the fusible plug mount.
- **Service valves**
  Check all around the service valves. Ensure service valve caps are secured on the service valves (to prevent leaks).

NOTE:
After removing A/C manifold gauge set from service valves, wipe any residue from valves to prevent any false readings by leak detector.

- **Cooling unit (Evaporator)**
  With engine OFF, turn blower fan on "High" for at least 15 seconds to dissipate any refrigerant trace in the cooling unit. Wait a minimum of 10 minutes accumulation time (refer to the manufacturer's recommended procedure for actual wait time) before inserting the leak detector probe into the drain hose. Keep the probe inserted for at least ten seconds. Use caution not to contaminate the ptobe tip with water or dirt that may be in the drain hose.

5. If a leak detector detects a leak, verify at least once by blowing compressed air into area of suspected leak, then repeat check as outlined above.
6. Do not stop when one leak is found. Continue to check for additional leaks at all system components.
   If no leaks are found, perform steps 7 - 10.
7. Start engine.
8. Set the heater A/C control as follows:
1) A/C switch ON.
2) Face mode
3) Recirculation switch ON
4) Max cold temperature
5) Fan speed high
9. Run engine at 1,500 rpm for at least 2 minutes.
10. Turn engine off and perform leak check again following steps 4 through 6 above.

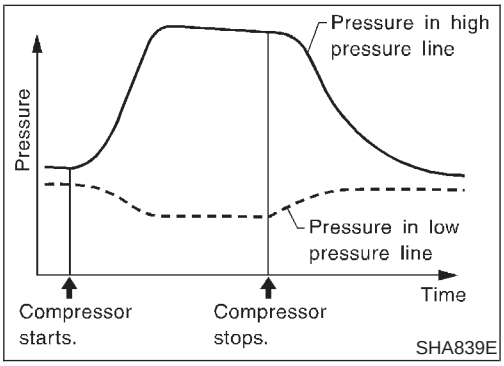

Refrigerant leaks should be checked immediately after stopping the engine. Begin with the leak detector at the compressor. The pressure on the high pressure side will gradually drop after refrigerant circulation stops and pressure on the low pressure side will gradually rise, as shown in the graph. Some leaks are more easily detected when pressure is high.

11. Before connecting ACR4 to vehicle, check ACR4 gauges. No refrigerant pressure should be displayed. If pressure is displayed, recover refrigerant from equipment lines and then check refrigerant purity.
12. Confirm refrigerant purity in supply tank using ACR4 and refrigerant identifier.
13. Confirm refrigerant purity in vehicle A/C system using ACR4 and refrigerant identifier.
14. Discharge A/C system using approved refrigerant recovery equipment. Repair the leaking fitting or component as necessary.
15. Evacuate and recharge A/C system and perform the leak test to confirm no refrigerant leaks.
16. Conduct A/C performance test to ensure system works properly.

Belt

TENSION ADJUSTMENT

NCHA0079

- **Refer to MA-13, “Checking Drive Belt”.**

Idle Air Control Valve (IACV) — Auxiliary Air Control (AAC) Valve

INSPECTION

NCHA0189

- Refer to EC-436, “System Description” and HA-14.

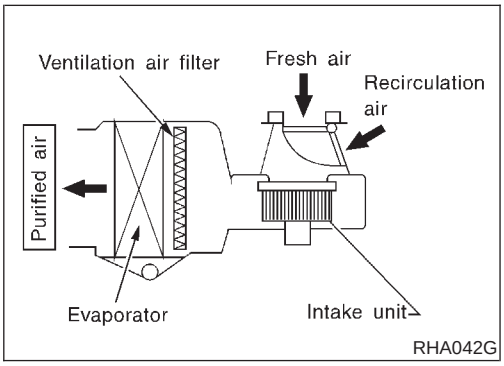

RHA042G

Ventilation Air Filter

FUNCTION

NCHA0109

Air inside passenger compartment is kept clean at either recirculation or fresh mode by installing ventilation air filter into cooling unit.

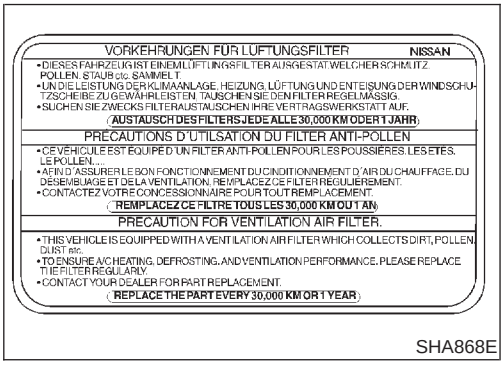
VORKEHRUNGEN FÜR LUFTUNGSFILTER NISSAN
• DIESES FAHRZEUG IST EINEM LÜFTUNGSFILTER AUSGESTATWELCHER SCHMUTZ, POLLEN, STAUB etc. SAMMELT.
• UN DIE LEISTUNG DER KLIMAANLAGE, HEIZUNG, LÜFTUNG UND ENTEISUNG DER WINDSCHUTZSCHEIBE ZU GEWÄHRLEISTEN, TAUSCHEN SIE DEN FILTER REGELMÄSSIG.
• SUCHEN SIE ZWECKS FILTERAUSTAUSCHEN IHRE VERTRAGSWERKSTATT AUF.
(AUSTAUSCH DES FILTERS JEDE ALLE 30,000 KM ODER 1 JAHR)

PRECAUTIONS D'UTILSATION DU FILTER ANTI-POLLEN
• CE VEHICULE EST EQUIPE D'UN FILTER ANTI-POLLEN POUR LES POUSSIERES, LES FETES, LE POLLEN,...
• AFIN D'ASSURER LE BON FONCTIONNEMENT DU CINDITIONNEMENT D'AIR DU CHAUFFAGE, DU DESEMBUAGE ET DE LA VENTILATION, REMPLACEZ CE FILTER REGULIEREMENT.
• CONTACTEZ VOTRE CONCESSIONNAIRE POUR TOUT REMPLACEMENT.
(REMPLACEZ CE FILTRE TOUS LES 30,000 KM OU 1 AN)

PRECAUTION FOR VENTILATION AIR FILTER.
• THIS VEHICLE IS EQUIPPED WITH A VENTILATION AIR FILTER WHICH COLLECTS DIRT, POLLEN, DUST etc.
• TO ENSURE A/C HEATING, DEFROSTING, AND VENTILATION PERFORMANCE, PLEASE REPLACE THE FILTER REGULARLY.
• CONTACT YOUR DEALER FOR PART REPLACEMENT.
(REPLACE THE PART EVERY 30,000 KM OR 1 YEAR)
SHA868E

REPLACEMENT TIMING

NCHA0110

Replace ventilation air filter.
Refer to MA-6, “PERIODIC MAINTENANCE”.
Caution label is fixed inside the glove box.

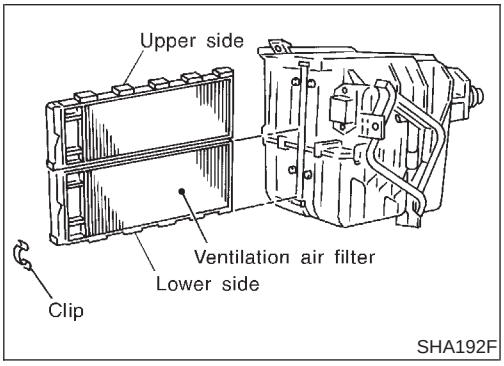

SHA192F

REPLACEMENT PROCEDURES

NCHA0111

- Remove glove box.
- Remove instrument reinforcement from instrument panel.
- Remove ventilation air filter fixed clip.
- Take out the lower side ventilation air filter from cooling unit.
- Then slide upper side filter to the bottom position and take off the ventilation air filter from the cooling unit.
- Replace with new one and reinstall on cooling unit.
- Reinstall instrument reinforcement, glove box and undercover.

Auto

COMPRESSOR

NCHA0081

Model	ZEXEL make DKV-14G
Type	Vane rotary
Displacement cm^3 (cu in)/rev.	140 (8.54)
Direction of rotation	Clockwise (viewed from drive end)
Drive belt	Poly V

LUBRICANT

NCHA0082

Model		ZEXEL make DKV-14G
Name		Nissan A/C System Oil Type R
Part number		KLH00-PAGR0
Capacity mℓ (US fl oz, Imp fl oz)	Total in system	180 (6.1, 6.3)
	Compressor (Service part) charging amount	180 (6.1, 6.3)

REFRIGERANT

NCHA0083

Type	HFC-134a (R-134a)
Capacity kg (lb)	0.55 - 0.65 (1.21 - 1.43)

ENGINE IDLING SPEED (WHEN A/C IS ON)

NCHA0084

- **Refer to EC-632, “Idle Speed and Ignition Timing”.**

BELT TENSION

NCHA0085

- **Refer to MA-13, “Checking Drive Belts”.**

Supplemental Restraint System (SRS) "AIR BAG" and "SEAT BELT PRE-TENSIONER"

NCHA0190

The Supplemental Restraint System such as "AIR BAG" and "SEAT BELT PRE-TENSIONER" used along with a seat belt, helps to reduce the risk or severity of injury to the driver and front passenger for certain types of collision. The SRS system composition which is available to INFINITI G20 is as follows:

- For a frontal collision
  The Supplemental Restraint System consists of driver air bag module (located in the center of the steering wheel), front passenger air bag module (located on the instrument panel on passenger side), seat belt pre-tensioners, a diagnosis sensor unit, warning lamp, wiring harness and spiral cable.
- For a side collision
  The Supplemental Restraint System consists of side air bag module (located in the outer side of front seat), satellite sensor, diagnosis sensor unit (one of components of air bags for a frontal collision), wiring harness, warning lamp (one of components of air bags for a frontal collision).

Information necessary to service the system safely is included in the **RS** section of this Service Manual.

WARNING:

- **To avoid rendering the SRS inoperative, which could increase the risk of personal injury or death in the event of a collision which would result in air bag inflation, all maintenance must be performed by an authorized INFINITI dealer.**
- **Improper maintenance, including incorrect removal and installation of the SRS, can lead to personal injury caused by unintentional activation of the system. For removal of Spiral Cable and Air Bag Module, see the RS section.**
- **Do not use electrical test equipment on any circuit related to the SRS unless instructed to in this Service Manual. Spiral cable and wiring harnesses (except "SEAT BELT PRE-TENSIONER") covered with yellow insulation tape either just before the harness connectors or for the complete harness are related to the SRS.**

Precautions for Working with HFC-134a (R-134a)

NCHA0113

WARNING:

- **CFC-12 (R-12) refrigerant and HFC-134a (R-134a) refrigerant are not compatible. If the refrigerants are mixed and compressor failure is likely to occur, refer to "CONTAMINATED REFRIGERANT" below. To determine the purity of HFC-134a (R-134a) in the vehicle and recovery tank, use Refrigerant Recovery/Recycling Recharging equipment (ACR4) (J-39500-INF) and Refrigerant Identifier.**
- **Use only specified lubricant for the HFC-134a (R-134a) A/C system and HFC-134a (R-134a) components. If lubricant other than that specified is used, compressor failure is likely to occur.**
- **The specified HFC-134a (R-134a) lubricant rapidly absorbs moisture from the atmosphere. The following handling precautions must be observed:**

a) When removing refrigerant components from a vehicle, immediately cap (seal) the component to minimize the entry of moisture from the atmosphere.

b) When installing refrigerant components to a vehicle, do not remove the caps (unseal) until just before connecting the components. Connect all refrigerant loop components as quickly as possible to minimize the entry of moisture into system.

c) Only use the specified lubricant from a sealed container. Immediately reseal containers of lubricant. Without proper sealing, lubricant will become moisture saturated and should not be used.

d) Avoid breathing A/C refrigerant and lubricant vapor or mist. Exposure may irritate eyes, nose and throat. Remove R-134a from the A/C system, using certified service equipment meeting requirements of SAE J2210 (R-134a recycling equipment), or J2209 (R-134a recovery equipment). If accidental system discharge occurs, ventilate work area before resuming service. Additional health and safety information may be obtained from refrigerant and lubricant manufacturers.

e) Do not allow lubricant (Nissan A/C System Oil Type S) to come in contact with styrofoam parts. Damage may result.

CONTAMINATED REFRIGERANT

NCHA0113S01

If a refrigerant other than pure R-134a is identified in a vehicle, your options are:

- Explain to the customer that environmental regulations prohibit the release of contaminated refrigerant into the atmosphere.

- Explain that recovery of the contaminated refrigerant could damage your service equipment and refrigerant supply.
- Suggest the customer return the vehicle to the location of previous service where the contamination may have occurred.
- If you choose to perform the repair, recover the refrigerant using only **dedicated equipment and containers. Do not recover contaminated refrigerant into your existing service equipment.** If your facility does not have dedicated recovery equipment, you may contact a local refrigerant product retailer for available service. This refrigerant must be disposed of in accordance with all federal and local regulations. In addition, replacement of all refrigerant system components on the vehicle is recommended.
- If the vehicle is within the warranty period, the air conditioner warranty is void. Please contact Nissan Customer Affairs for further assistance.

General Refrigerant Precautions

NCHA0114

WARNING:

- **Do not release refrigerant into the air. Use approved recovery/recycling equipment to capture the refrigerant every time an air conditioning system is discharged.**
- **Always wear eye and hand protection (goggles and gloves) when working with any refrigerant or air conditioning system.**
- **Do not store or heat refrigerant containers above 52°C (125°F).**
- **Do not heat a refrigerant container with an open flame; if container warming is required, place the bottom of the container in a warm pail of water.**
- **Do not intentionally drop, puncture, or incinerate refrigerant containers.**
- **Keep refrigerant away from open flames: poisonous gas will be produced if refrigerant burns.**
- **Refrigerant will displace oxygen, therefore be certain to work in well ventilated areas to prevent suffocation.**
- **Do not pressure test or leak test HFC-134a (R-134a) service equipment and/or vehicle air conditioning systems with compressed air during repair. Some mixtures of air and R-134a have been shown to be combustible at elevated pressures. These mixtures, if ignited, may cause injury or property damage. Additional health and safety information may be obtained from refrigerant manufacturers.**

Precautions for Leak Detection Dye

NCHA0206

- The A/C system contains a fluorescent leak detection dye used for locating refrigerant leaks. An ultraviolet (UV) lamp is required to illuminate the dye when inspecting for leaks.
- Always wear fluorescence enhancing UV safety glasses to protect your eyes and enhance the visibility of the fluorescent dye.
- The fluorescent dye leak detector is not a replacement for an electronic refrigerant leak detector. The fluorescent dye leak detector should be used in conjunction with an electronic refrigerant leak detector (J-41995) to pin-point refrigerant leaks.
- For your safety and your Customer's satisfaction, read and follow all manufacture's operating instructions and precautions prior to performing the work.
- A compressor shaft seal should not be repaired because of dye seepage. The compressor shaft seal should only be repaired after confirming the leak with an electronic refrigerant leak detector (J-41995).
- Always remove any dye from the leak area after repairs are complete to avoid a misdiagnosis during a future service.
- Do not allow dye to come into contact with painted body panels or interior components. If dye is spilled, clean immediately with the approved dye cleaner. Fluorescent dye left on a surface for an extended period of time cannot be removed.
- Do not spray the fluorescent dye cleaning agent on hot surfaces (engine exhaust manifold, etc.).
- Do not use more than one refrigerant dye bottle (1/4 ounce /7.4 cc) per A/C system.
- Leak detection dyes for R-134a and R12 A/C systems are different. Do not use R-134a leak detection dye in R-12 A/C system or R-12 leak detection dye in R-134a A/C systems or A/C system damage may result.
- The fluorescent properties of the dye will remain for over three (3) years unless a compressor failure occurs.

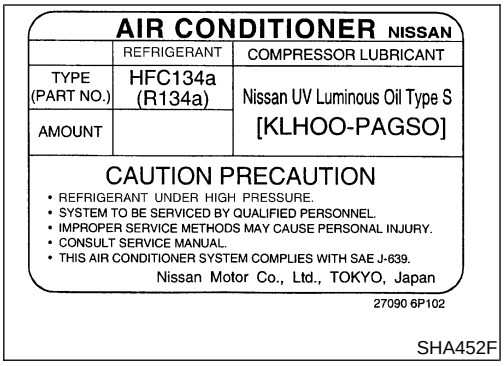

Identification

NCHA0207

IDENTIFICATION LABEL FOR VEHICLE

NCHA0207S01

Vehicles with factory installed fluorescent dye have this identification label on the under side of hood.

NOTE:

Vehicles with factory installed fluorescent dye have a green label.

Vehicles without factory installed fluorescent dye have a blue label.

Precautions for Refrigerant Connection

NCHA0115

A new type refrigerant connection has been introduced to all refrigerant lines except the following portion.

- Expansion valve to cooling unit

FEATURES OF NEW TYPE REFRIGERANT CONNECTION

NCHA0115S01

- The O-ring has been relocated. It has also been provided with a groove for proper installation. This eliminates the chance of the O-ring being caught in, or damaged by, the mating part. The sealing direction of the O-ring is now set vertically in relation to the contacting surface of the mating part to improve sealing characteristics.
- The reaction force of the O-ring will not occur in the direction that causes the joint to pull out, thereby facilitating piping connections.

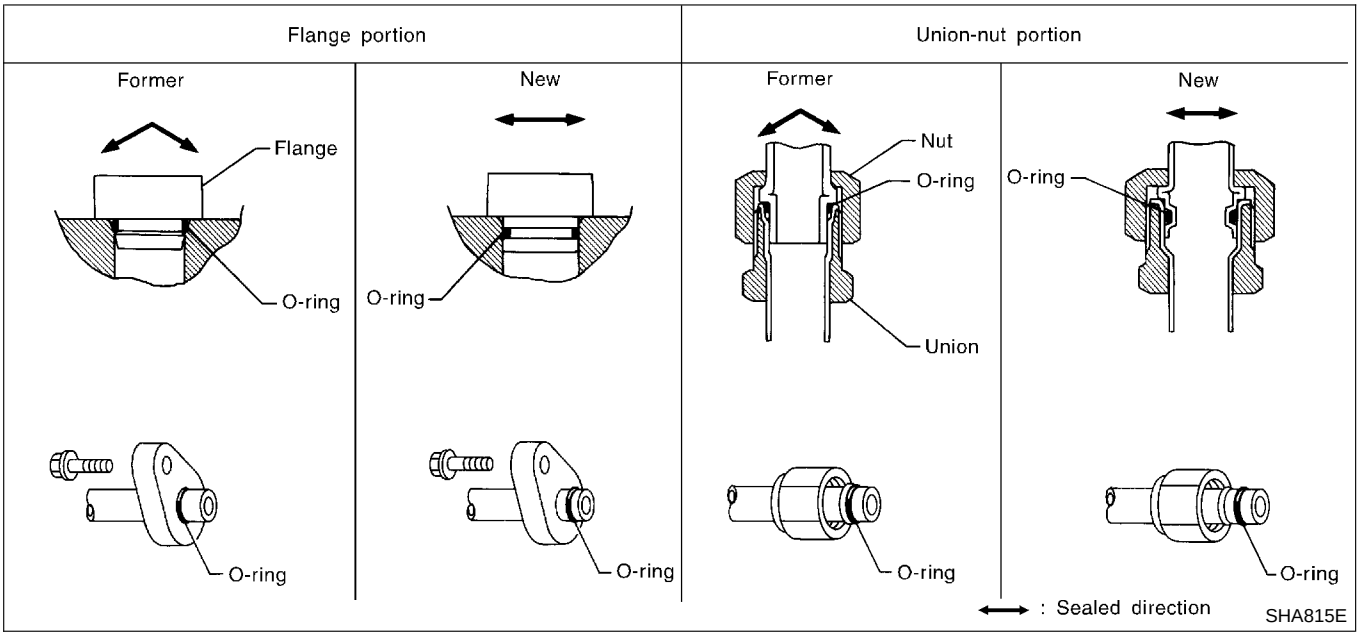

O-RING AND REFRIGERANT CONNECTION

NCHA0115S02

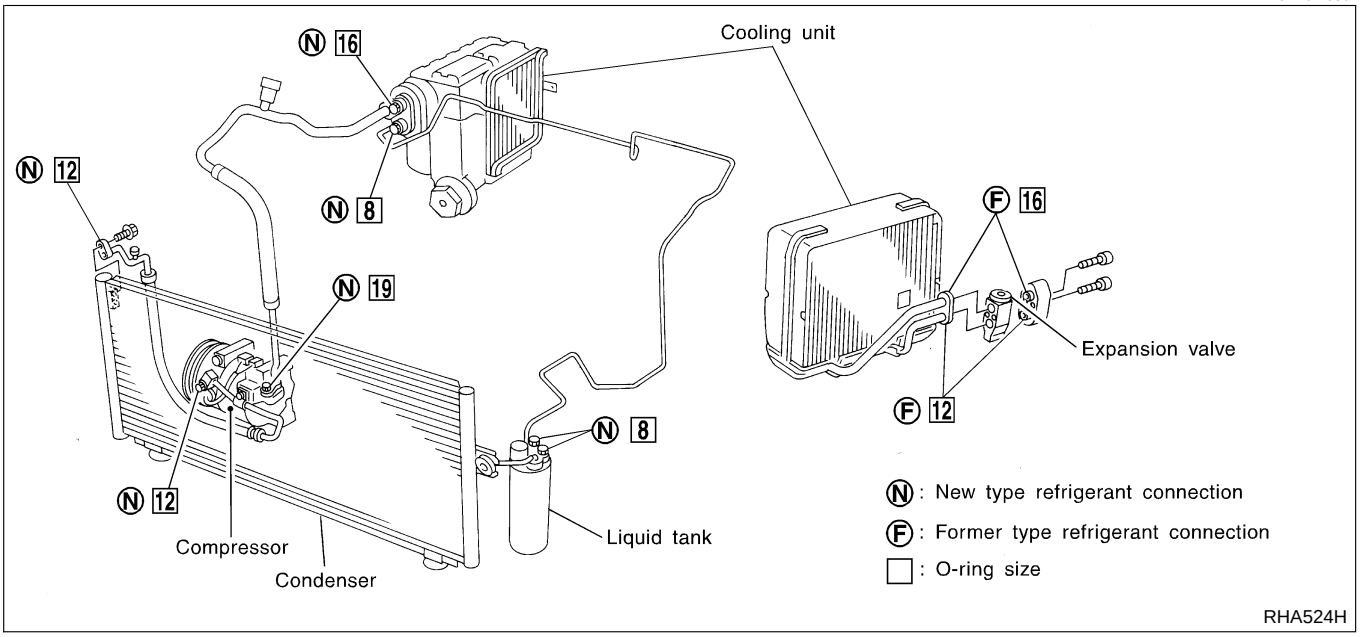

CAUTION:

The new and former refrigerant connections in some systems use different O-ring configurations. Do not confuse O-rings since they are not interchangeable. If a wrong O-ring is installed, refrigerant will leak at, or around, the connection.

O-Ring Part Numbers and Specifications

NCHA0115S0201

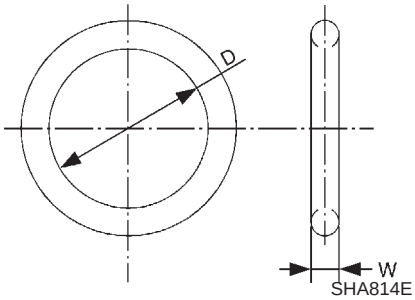

Connection type	O-ring size	Part number	D mm (in)	W mm (in)
New	8	92471 N8210	6.8 (0.268)	1.85 (0.0728)
New	12	92472 N8210	10.9 (0.429)	2.43 (0.0957)
Former		92475 71L00	11.0 (0.433)	2.40 (0.0945)
New	16	92473 N8210	13.6 (0.535)	2.43 (0.0957)
Former		92475 72L00	14.3 (0.563)	2.30 (0.0906)
New	19	92474 N8210	16.5 (0.650)	2.43 (0.0957)

WARNING:

Make sure all refrigerant is discharged into the recycling equipment and the pressure in the system is less than atmospheric pressure. Then gradually loosen the discharge side hose fitting and remove it.

CAUTION:

When replacing or cleaning refrigerant cycle components, observe the following.

- **When the compressor is removed, store it in the same position as it is when mounted on the car. Failure to do so will cause lubricant to enter the low pressure chamber.**
- **When connecting tubes, always use a torque wrench and a back-up wrench.**
- **After disconnecting tubes, immediately plug all openings to prevent entry of dirt and moisture.**
- **When installing an air conditioner in the vehicle, connect the pipes as the final stage of the operation. Do not remove the seal caps of pipes and other components until just before required for connection.**
- **Allow components stored in cool areas to warm to working area temperature before removing seal caps. This prevents condensation from forming inside A/C components.**
- **Thoroughly remove moisture from the refrigeration system before charging the refrigerant.**
- **Always replace used O-rings.**
- **When connecting tube, apply lubricant to circle of the O-rings shown in illustration. Be careful not**

to apply lubricant to threaded portion.
Lubricant name: Nissan A/C System Oil Type R
Part number: KLH00-PAGR0

- **O-ring must be closely attached to dented portion of tube.**
- **When replacing the O-ring, be careful not to damage O-ring and tube.**
- **Connect tube until you hear it click, then tighten the nut or bolt by hand until snug. Make sure that the O-ring is installed to tube correctly.**
- **After connecting line, conduct leak test and make sure that there is no leakage from connections. When the gas leaking point is found, disconnect that line and replace the O-ring. Then tighten connections of seal seat to the specified torque.**

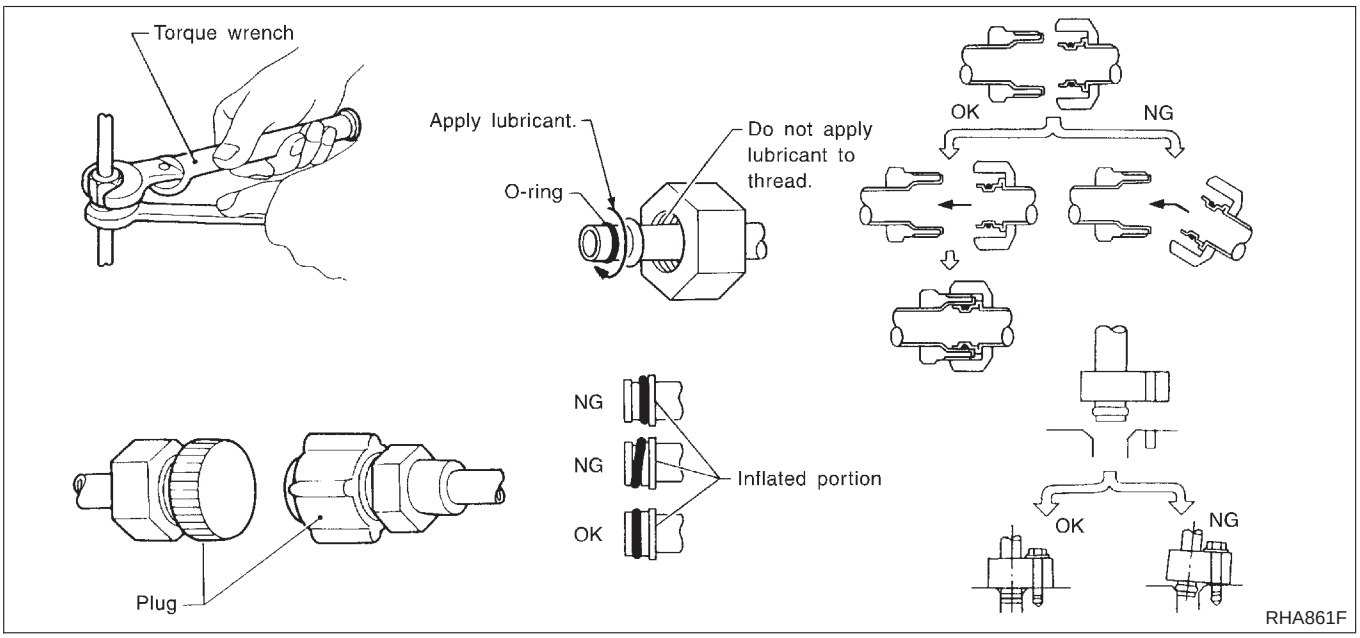

Precautions for Servicing Compressor

NCHA0116

- **Plug all openings to prevent moisture and foreign matter from entering.**
- **When the compressor is removed, store it in the same position as it is when mounted on the car.**
- **When replacing or repairing compressor, follow "Maintenance of Lubricant Quantity in Compressor" exactly. Refer to HA-193.**
- **Keep friction surfaces between clutch and pulley clean. If the surface is contaminated, with lubricant, wipe it off by using a clean waste cloth moistened with thinner.**
- **After compressor service operation, turn the compressor shaft by hand more than five turns in both directions. This will equally distribute lubricant inside the compressor. After the compressor is installed, let the engine idle and operate the compressor for one hour.**
- **After replacing the compressor magnet clutch, apply voltage to the new one and check for normal operation.**

Precautions for Service Equipment

NCHA0117

RECOVERY/RECYCLING EQUIPMENT

NCHA0117S01

Follow the manufacturer's instructions for machine operation and machine maintenance. Never introduce any refrigerant other than that specified into the machine.

ELECTRONIC LEAK DETECTOR

NCHA0117S02

Follow the manufacture's instructions for tester operation and tester maintenance.

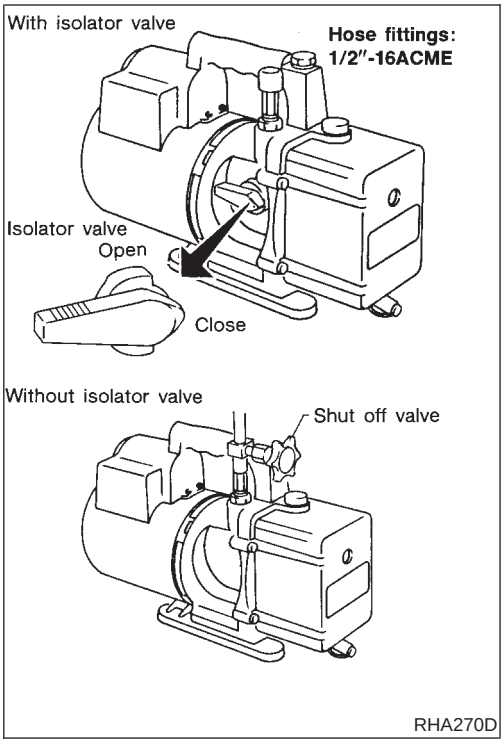

VACUUM PUMP

NCHA0117S03

The lubricant contained inside the vacuum pump is not compatible with the specified lubricant for HFC-134a (R-134a) A/C systems. The vent side of the vacuum pump is exposed to atmospheric pressure. So the vacuum pump lubricant may migrate out of the pump into the service hose. This is possible when the pump is switched off after evacuation (vacuuming) and hose is connected to it.

To prevent this migration, use a manual valve situated near the hose-to-pump connection, as follows.

- Usually vacuum pumps have a manual isolator valve as part of the pump. Close this valve to isolate the service hose from the pump.
- For pumps without an isolator, use a hose equipped with a manual shut-off valve near the pump end. Close the valve to isolate the hose from the pump.
- If the hose has an automatic shut off valve, disconnect the hose from the pump: as long as the hose is connected, the valve is open and lubricating oil may migrate.

Some one-way valves open when vacuum is applied and close under a no vacuum condition. Such valves may restrict the pump's ability to pull a deep vacuum and are not recommended.

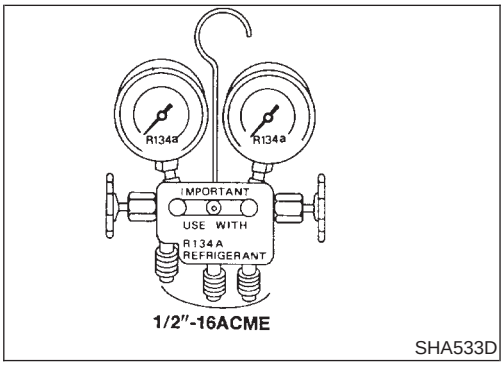

MANIFOLD GAUGE SET

NCHA0117S04

Be certain that the gauge face indicates R-134a or 134a. Make sure the gauge set has 1/2″-16 ACME threaded connections for service hoses. Confirm the set has been used only with refrigerant HFC-134a (R-134a) along with specified lubricant.

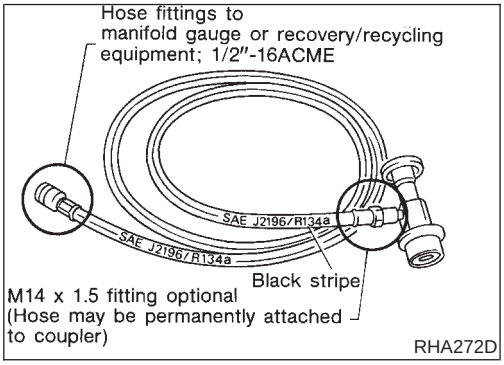

SERVICE HOSES

NCHA0117S05

Be certain that the service hoses display the markings described (colored hose with black stripe). All hoses must include positive shut off devices (either manual or automatic) near the end of the hoses opposite the manifold gauge.

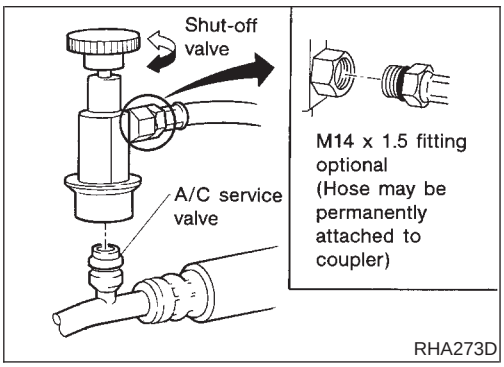

SERVICE COUPLERS

NCHA0117S06

Never attempt to connect HFC-134a (R-134a) service couplers to an CFC-12 (R-12) A/C system. The HFC-134a (R-134a) couplers will not properly connect to the CFC-12 (R-12) system. However, if an improper connection is attempted, discharging and contamination may occur.

Shut-off valve rotation	A/C service valve
Clockwise	Open
Counterclockwise	Close

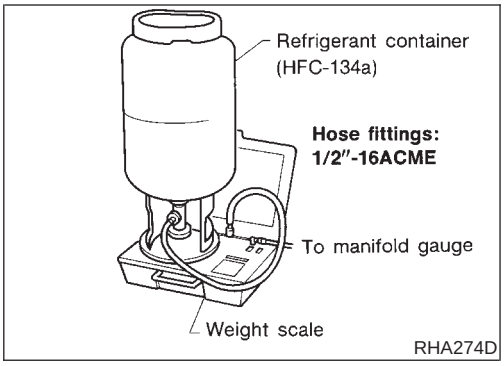

REFRIGERANT WEIGHT SCALE

NCHA0117S07

Verify that no refrigerant other than HFC-134a (R-134a) and specified lubricants have been used with the scale. If the scale controls refrigerant flow electronically, the hose fitting must be 1/2″-16 ACME.

CALIBRATING ACR4 WEIGHT SCALE

NCHA0117S09

Calibrate the scale every three months.
To calibrate the weight scale on the ACR4 (J-39500-INF):

1. Press **Shift/Reset** and **Enter** at the same time.
2. Press **8787**. "**A1**" will be displayed.
3. Remove all weight from the scale.
4. Press **0**, then press **Enter**. "**0.00**" will be displayed and change to "**A2**".
5. Place a known weight (dumbbell or similar weight), between 4.5 and 36.3 kg (10 and 80 lb) on the center of the weight scale.
6. Enter the known weight using four digits. (Example 10 lb = 10.00, 10.5 lb = 10.50)
7. Press **Enter** — the display returns to the vacuum mode.
8. Press **Shift/Reset** and **Enter** at the same time.
9. Press **6** — the known weight on the scale is displayed.
10. Remove the known weight from the scale. "**0.00**" will be displayed.
11. Press **Shift/Reset** to return the ACR4 to the program mode.

CHARGING CYLINDER

NCHA0117S08

Using a charging cylinder is not recommended. Refrigerant may be vented into air from cylinder's top valve when filling the cylinder with refrigerant. Also, the accuracy of the cylinder is generally less than that of an electronic scale or of quality recycle/recharge equipment.

Wiring Diagrams and Trouble Diagnosis

NCHA0118

When you read wiring diagrams, refer to the following:

- GI-11, "HOW TO READ WIRING DIAGRAMS"
- EL-10, "Wiring Diagram — POWER —".

When you perform trouble diagnosis, refer to the following:

- GI-34, "HOW TO FOLLOW TEST GROUPS IN TROUBLE DIAGNOSES"
- GI-24, "HOW TO PERFORM EFFICIENT DIAGNOSIS FOR AN ELECTRICAL INCIDENT"

Special Service Tools

NCHA0119

The actual shapes of Kent-Moore tools may differ from those of special service tools illustrated here.

Tool number (Kent-Moore No.) Tool name	Description	
KV99231260 (J-38874) Clutch disc wrench	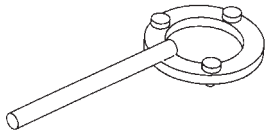 NT204	Removing shaft nut and clutch disc
KV99232340 (J-38874) Clutch disc puller	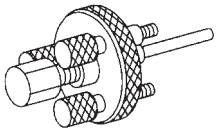 NT206	Removing clutch disc
KV99234330 (J-39024) Pulley installer	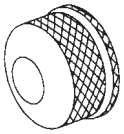 NT207	Installing pulley
KV99233130 (J-39023) Pulley puller	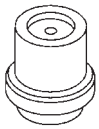 NT208	Removing pulley

HFC-134a (R-134a) Service Tools and Equipment

=NCHA0120

Never mix HFC-134a refrigerant and/or its specified lubricant with CFC-12 (R-12) refrigerant and/or its lubricant.

Separate and non-interchangeable service equipment must be used for handling each type of refrigerant/lubricant.

Refrigerant container fittings, service hose fittings and service equipment fittings (equipment which handles refrigerant and/or lubricant) are different between CFC-12 (R-12) and HFC-134a (R-134a). This is to avoid mixed use of the refrigerants/lubricant.

Adapters that convert one size fitting to another must never be used: refrigerant/lubricant contamination will occur and compressor failure will result.

Tool number (Kent-Moore No.) Tool name	Description	
HFC-134a (R-134a) refrigerant	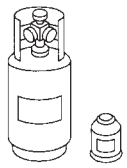 NT196	Container color: Light blue Container marking: HFC-134a (R-134a) Fitting size: Thread size ● Large container 1/2″-16 ACME
KLH00-PAGR0 (—) Nissan A/C System Oil Type R	 NT197	Type: Poly alkylene glycol oil (PAG), type R Application: HFC-134a (R-134a) vane rotary compressors (Nissan only) Lubricity: 40 mℓ (1.4 US fl oz, 1.4 Imp fl oz)
(J-39500-INF) Recovery/Recycling Recharging equipment (ACR4)	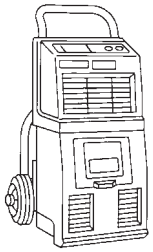 NT195	Function: Refrigerant Recovery and Recycling and Recharging
(J-41995) Electrical leak detector	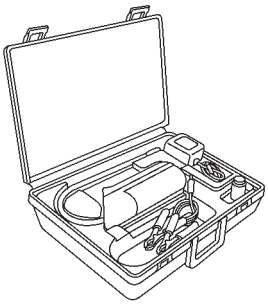 AHA281A	Power supply: ● DC 12V (Cigarette lighter)

Tool number (Kent-Moore No.) Tool name	Description	
(J-43926) Refrigerant dye leak detection kit Kit includes: (J-42220) UV lamp and UV safety glasses (J-41459) Refrigerant dye injector (J-41447) qty. 24 R-134a refrigerant dye (J-43872) Refrigerant dye cleaner	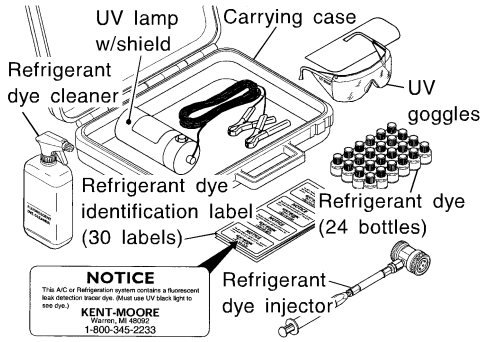 SHA437F	Power supply: DC 12V (Battery terminal)
(J-42220) Fluorescent dye leak detector	UV lamp UV safety glasses 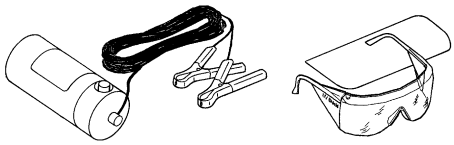 SHA438F	Power supply: DC12V (Battery terminal) For checking refrigerant leak when fluorescent dye is installed in A/C system. Includes: UV lamp and UV safety glasses
(J-41447) R134a Fluorescent Leak Detection Dye (Box of 24, 1/4 ounce bottles)	Dye 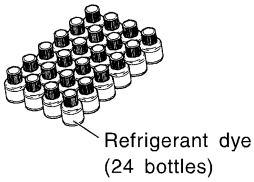 SHA439F	Application: For R-134a PAG oil Container: 1/4 ounce (7.4 cc) bottle (Includes self-adhesive dye identification labels for affixing to vehicle after charging system with dye.)
(J-41459) R134a Dye Injector Use with J-41447, 1/4 ounce bottle	Dye injector 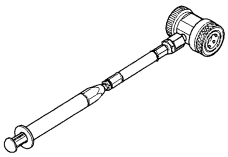 SHA440F	For injecting 1/4 ounce of Fluorescent Leak Detection Dye into A/C system.
(J-43872) Dye cleaner	 SHA441F	For cleaning dye spills.
(J-39183) Manifold gauge set (with hoses and couplers)	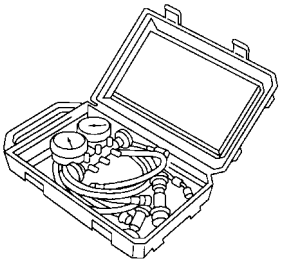 NT199	Identification: ● The gauge face indicates R-134a. Fitting size: Thread size ● 1/2″-16 ACME

Tool number (Kent-Moore No.) Tool name	Description	
Service hoses ● High side hose (J-39501-72) ● Low side hose (J-39502-72) ● Utility hose (J-39476-72)	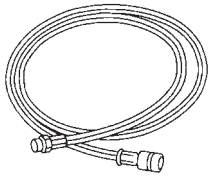 NT201	Hose color: ● Low hose: Blue with black stripe ● High hose: Red with black stripe ● Utility hose: Yellow with black stripe or green with black stripe Hose fitting to gauge: ● 1/2″-16 ACME
Service couplers ● High side coupler (J-39500-20) ● Low side coupler (J-39500-24)	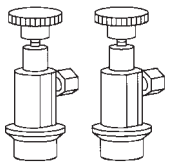 NT202	Hose fitting to service hose: ● M14 x 1.5 fitting is optional or permanently attached.
(J-39650) Refrigerant weight scale	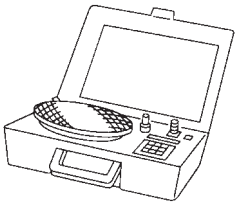 NT200	For measuring of refrigerant Fitting size: Thread size ● 1/2″-16 ACME
(J-39649) Vacuum pump (Including the isolator valve)	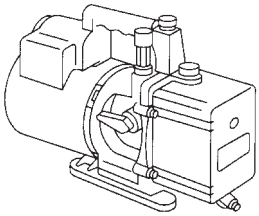 NT203	Capacity: ● Air displacement: 4 CFM ● Micron rating: 20 microns ● Oil capacity: 482 g (17 oz) Fitting size: Thread size ● 1/2″-16 ACME

COMMERCIAL SERVICE TOOL

NCHA0120S01

Tool name	Description	
Refrigerant identifier equipment	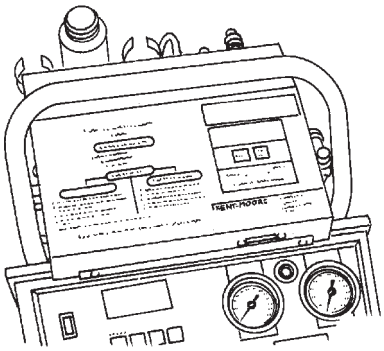 NT765	For checks refrigerant purity and for system contamination

Refrigeration System

REFRIGERATION CYCLE

NCHA0121

Refrigerant Flow

NCHA0121S01

The refrigerant flows in the standard pattern, that is, through the compressor, the condenser, the liquid tank, through the evaporator, and back to the compressor. The refrigerant evaporation through the evaporator coil is controlled by an externally equalized expansion valve, located inside the evaporator case.

Freeze Protection

NCHA0121S02

The compressor cycles go on and off to maintain the evaporator temperature within a specified range. When the evaporator coil temperature falls below a specified point, the thermo control amplifier interrupts the compressor operation. When the evaporator coil temperature rises above the specification, the thermo control amplifier allows compressor operation.

Refrigerant System Protection

NCHA0121S03

Refrigerant Pressure Sensor

NCHA0121S0303

The refrigerant system is protected against excessively high or low pressures by the refrigerant pressure sensor, located on the liquid tank. If the system pressure rises above, or falls below the specifications, the refrigerant pressure sensor detects the pressure inside the refrigerant line and sends the voltage signal to the ECM. ECM makes the A/C relay go OFF and stops the compressor when pressure on the high pressure side detected by refrigerant pressure sensor is over about 2,746 kPa (28 kg/cm^2, 398 psi) or below about 177 kPa (1.8 kg/cm^2, 26 psi).

Pressure Relief Valve

NCHA0121S0302

The refrigerant system is also protected by a pressure relief valve, located in the rear head of the compressor. When the pressure of refrigerant in the system increases to an abnormal level [more than 3,727 kPa (38 kg/cm^2, 540 psi)], the release port on the pressure relief valve automatically opens and releases refrigerant into the atmosphere.

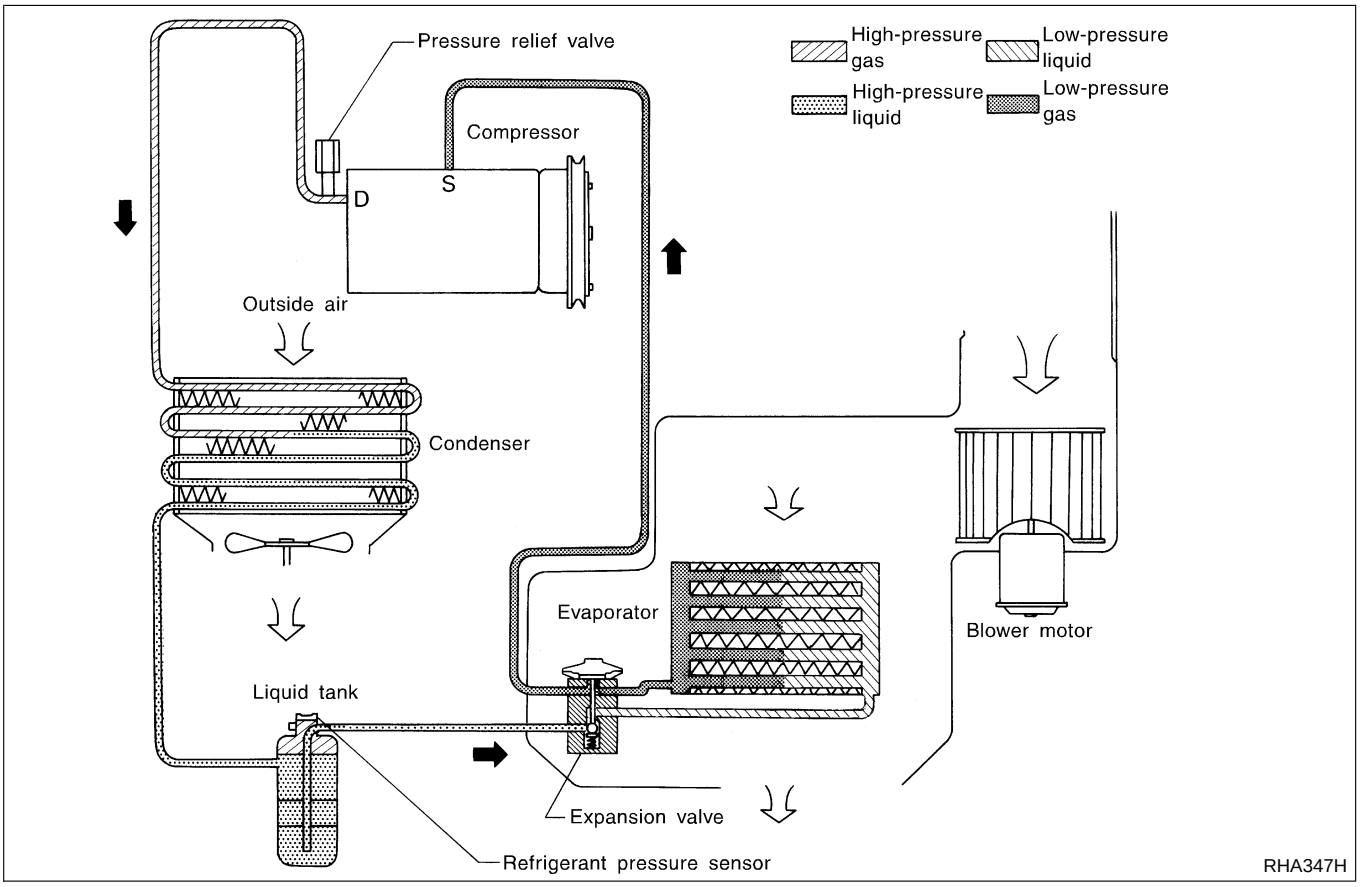

Component Layout

NCHA0122

SEC. 270•271•272•273

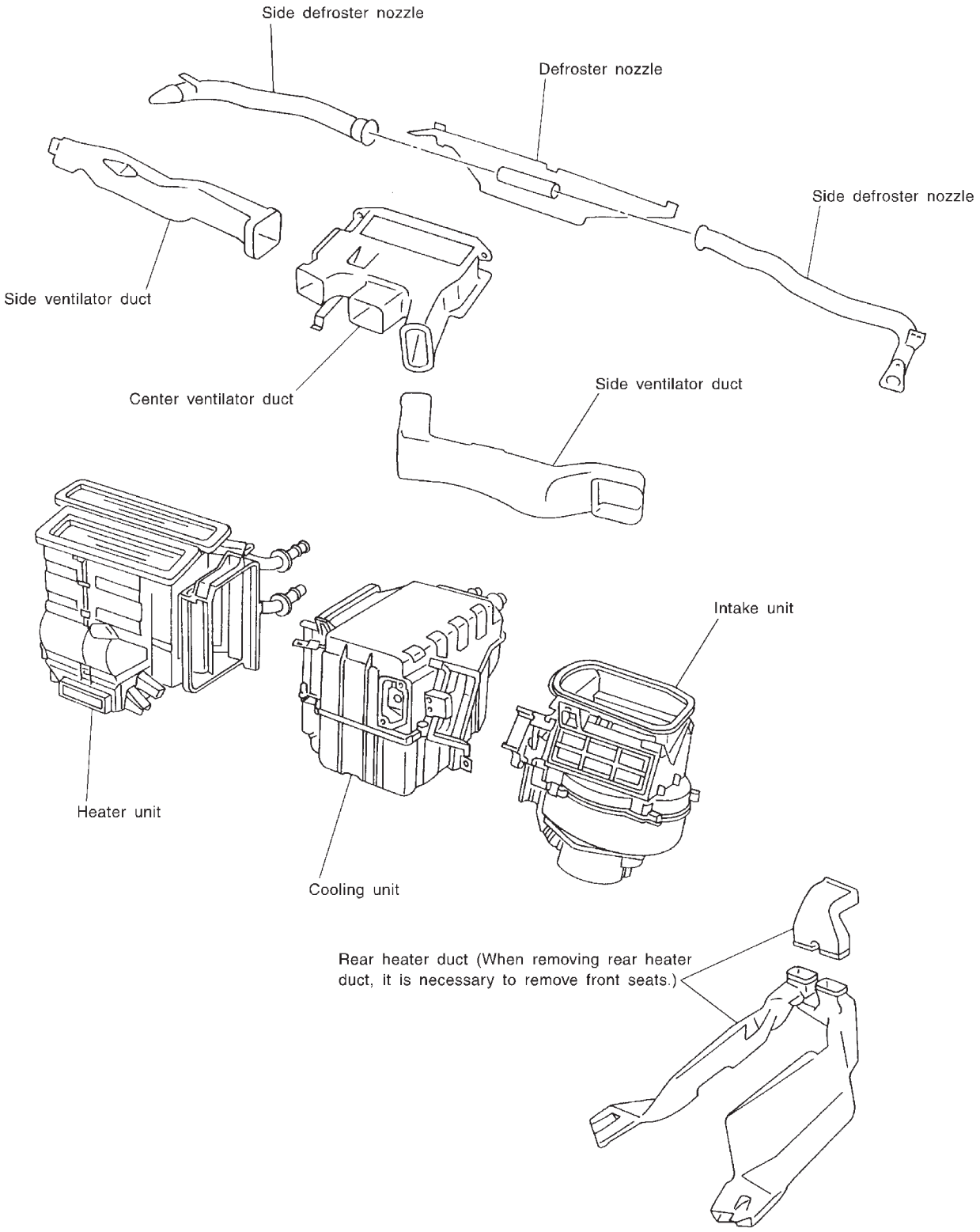

RHA041H

Control Operation

NCHA0123

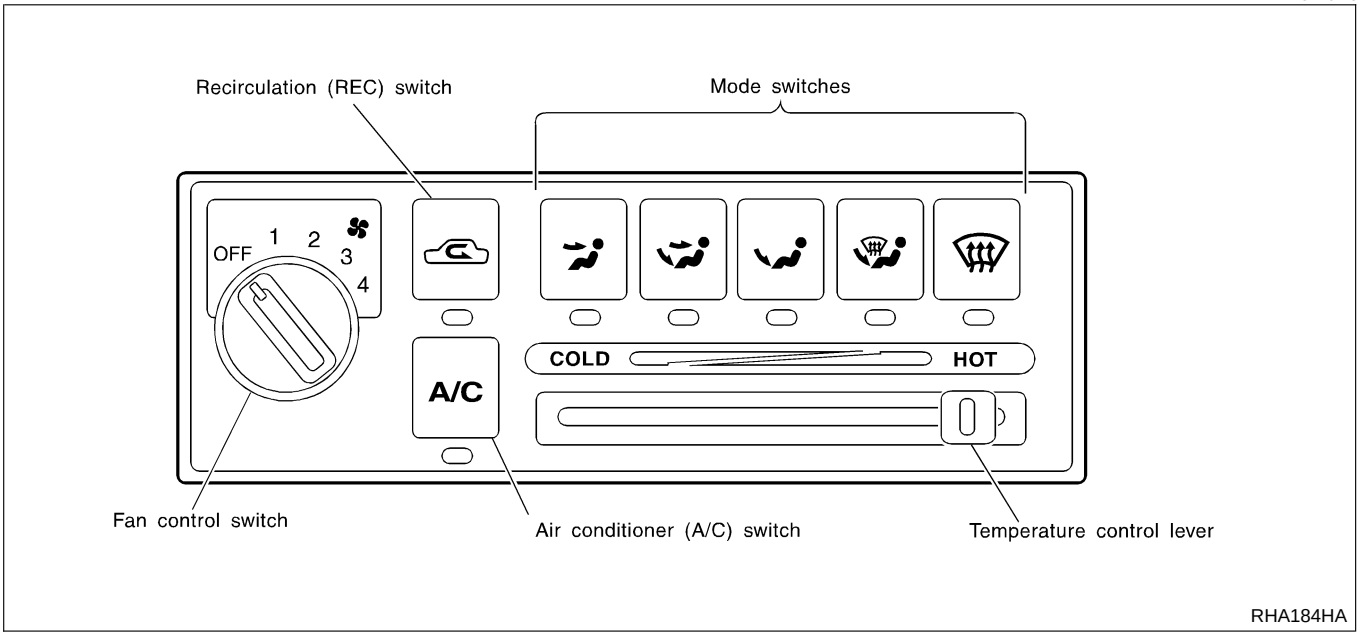

FAN CONTROL SWITCH

NCHA0123S01

This switch turns the fan ON and OFF, and controls fan speed.

MODE SWITCHES

NCHA0123S02

These switches control the outlet air flow.
The indicator lamp will also light when the switch is depressed.
When DEF or D/F mode is selected, the push control unit sets the intake door to FRESH.
The compressor turns on when DEF mode is selected.

TEMPERATURE CONTROL LEVER

NCHA0123S03

This lever allows you to adjust the temperature of the discharge air.

RECIRCULATION (REC) SWITCH

NCHA0123S04

OFF position: Outside air is drawn into the passenger compartment.
In VENT mode and hi coolant temperature [Over 105°C (221°F)] the intake door set to Recirculation position.
ON position: Interior air is recirculated inside the vehicle.
The indicator lamp will also light.
Recirculation is canceled when DEF or D/F mode is selected, and resumes when another mode is chosen.

AIR CONDITIONER (A/C) SWITCH

NCHA0123S05

The air conditioner switch controls the A/C system. When the switch is depressed with the fan ON, the compressor will turn ON. The indicator lamp will also light.
The air conditioner cooling function operates only when the engine is running.

Discharge Air Flow

NCHA0124

Air outlets

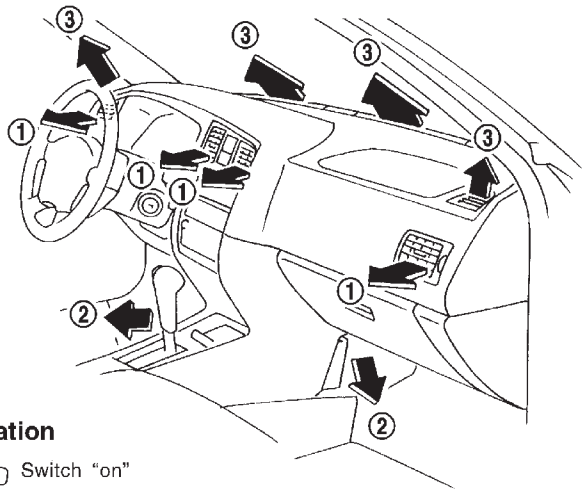

Foot

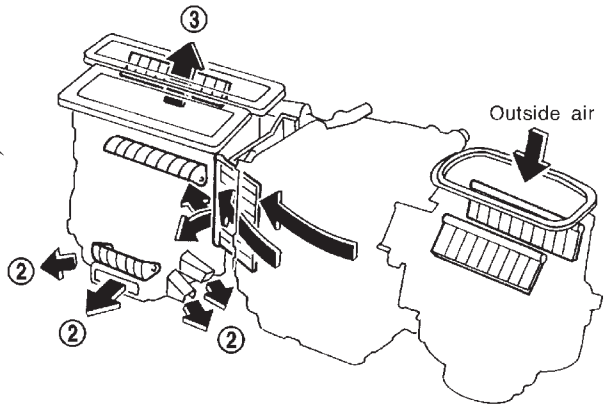

Ventilation

Switch "on"

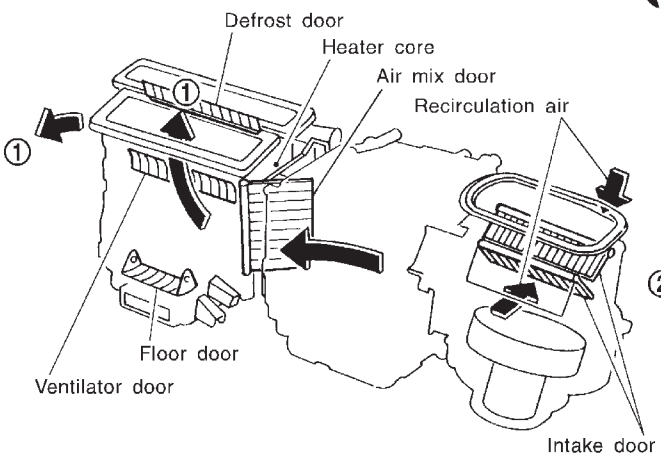

Foot and defrost

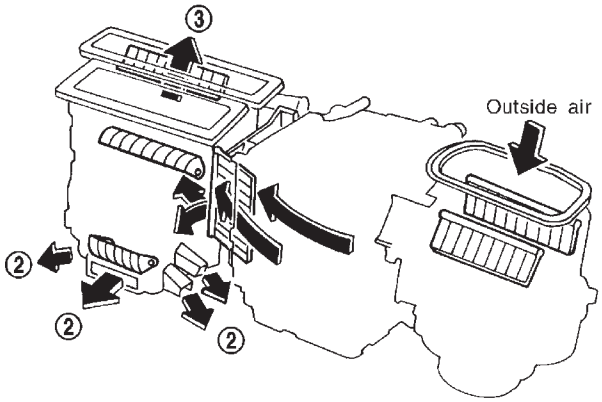

Bi-level

Switch "off"

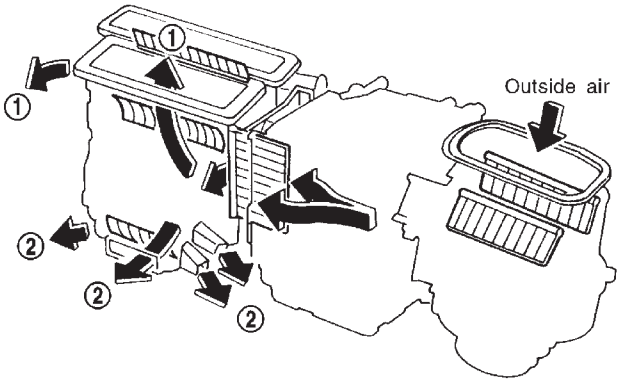

Defrost

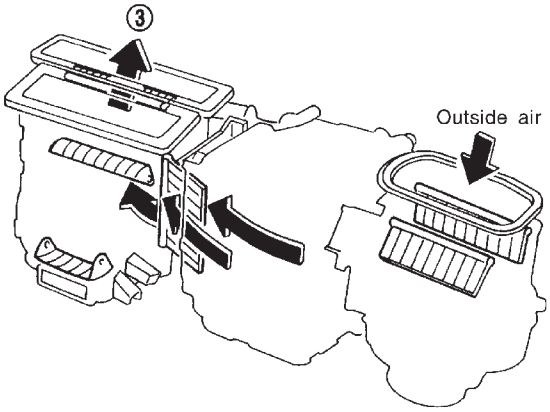

① : To face

② : To foot

③ : To defrost

For air flow %, refer to "Operational Check", "TROUBLE DIAGNOSES".

RHA042H

System Description

SWITCHES AND THEIR CONTROL FUNCTIONS

NCHA0125

NCHA0125S01

Knob/Switch		Knob/Switch position							Air outlet	Intake air	Compressor
		A/C									
A/C		○							—	—	ON*1
Mode			○						VENT	—	—
				○					B/L	—	—
					○				FOOT	—	—
						○			D/F	FRE	—
							○		DEF	FRE	ON*1
								○	—	REC*2	—

*1: Compressor is operated by ECM.
*2: In DEF and D/F modes, REC switch is canceled.

Component Location

NCHA0126

ENGINE COMPARTMENT

NCHA0126S01

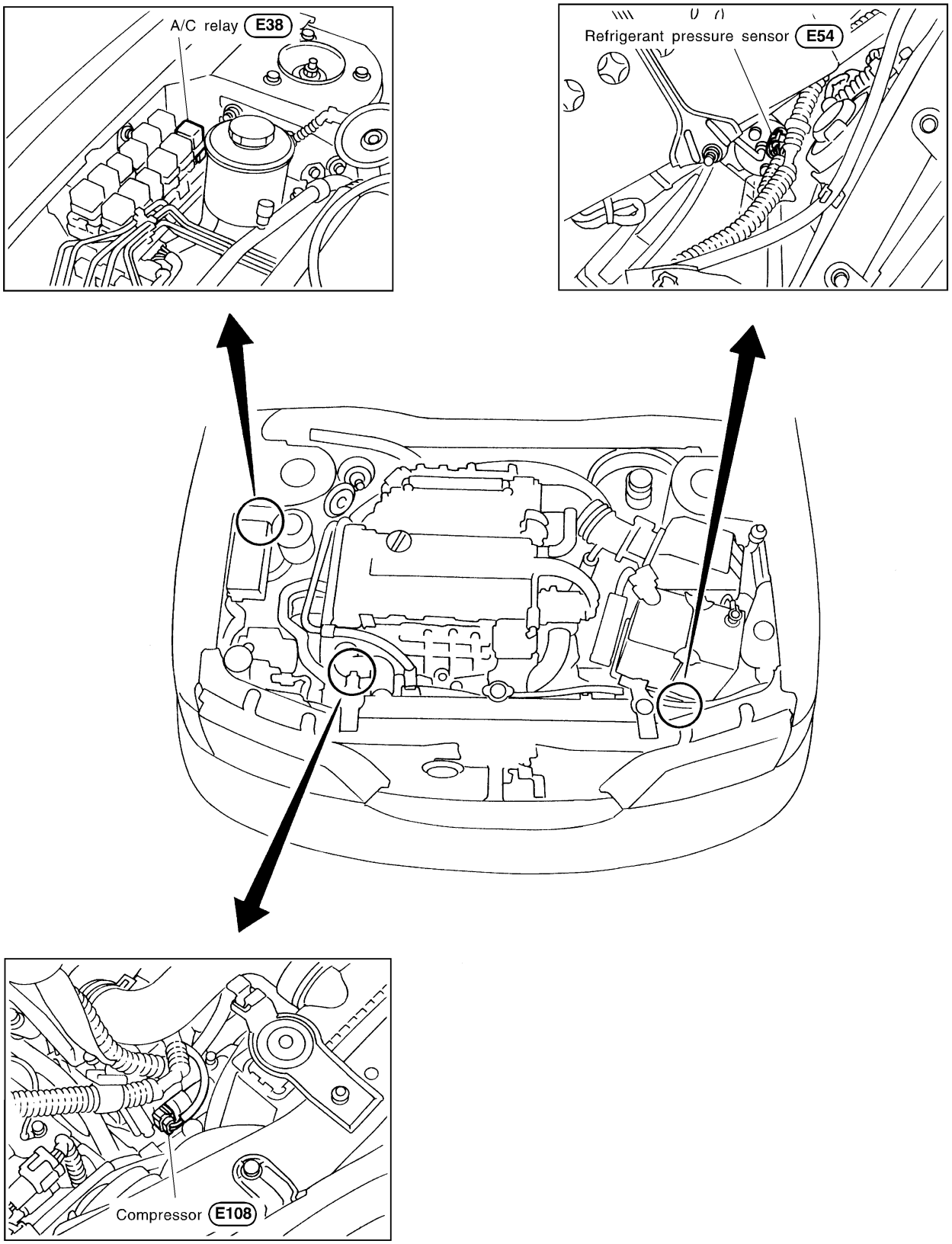

RHA185HB

PASSENGER COMPARTMENT

NCHA0126S02

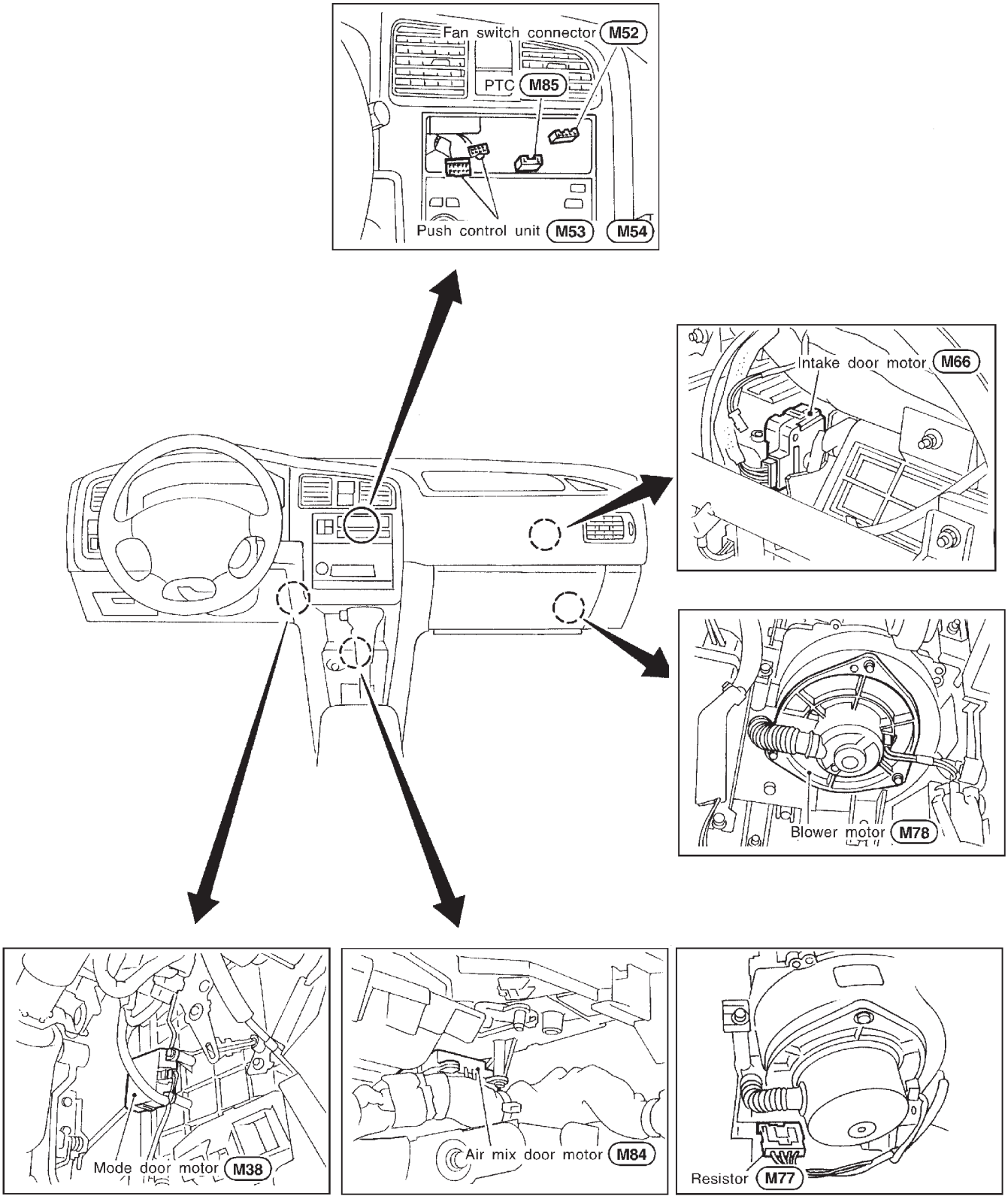

RHA186H

Circuit Diagram — Air Conditioner

NCHA0127

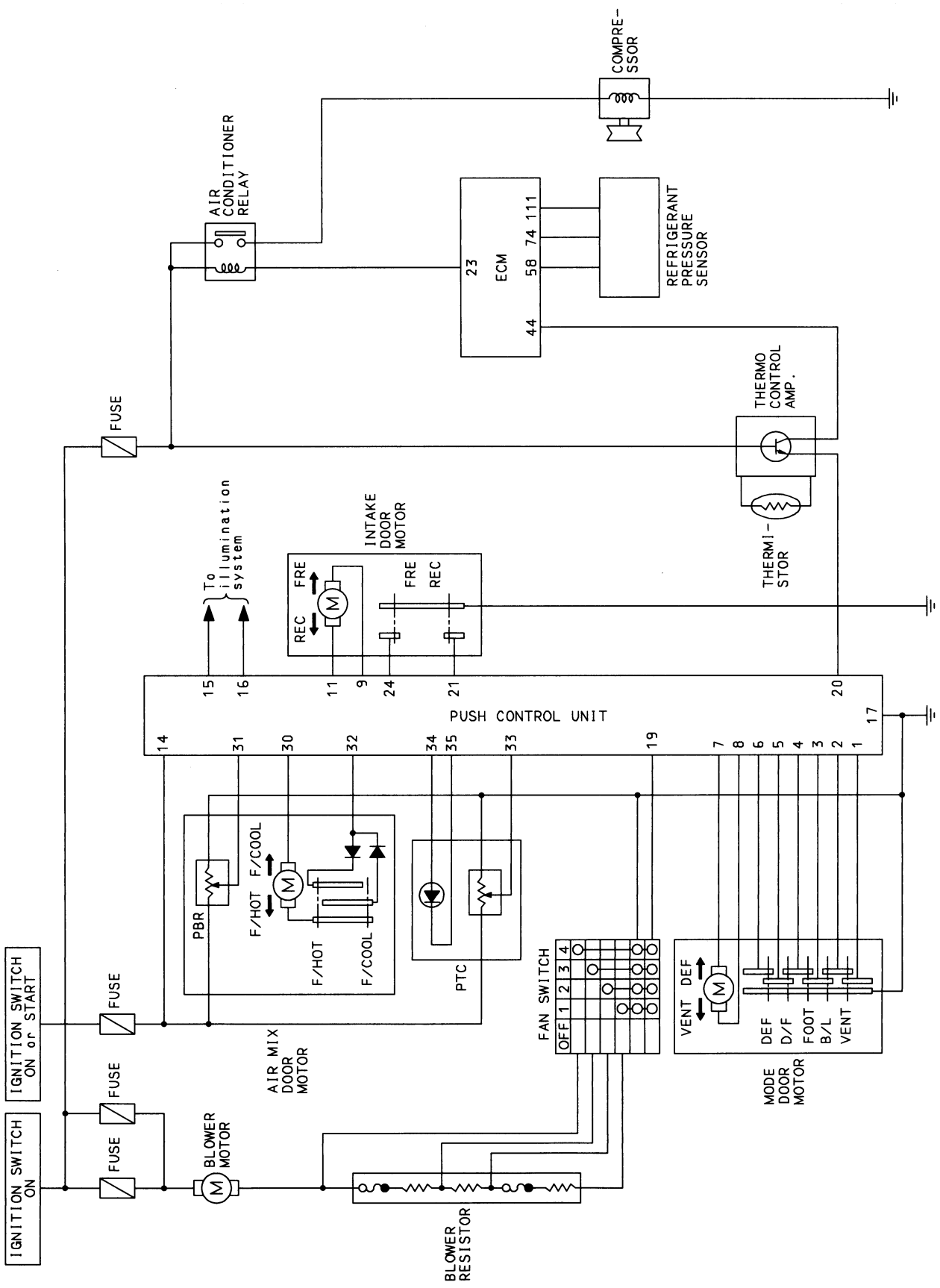

THA253

Wiring Diagram — A/C, M —

NCHA0128

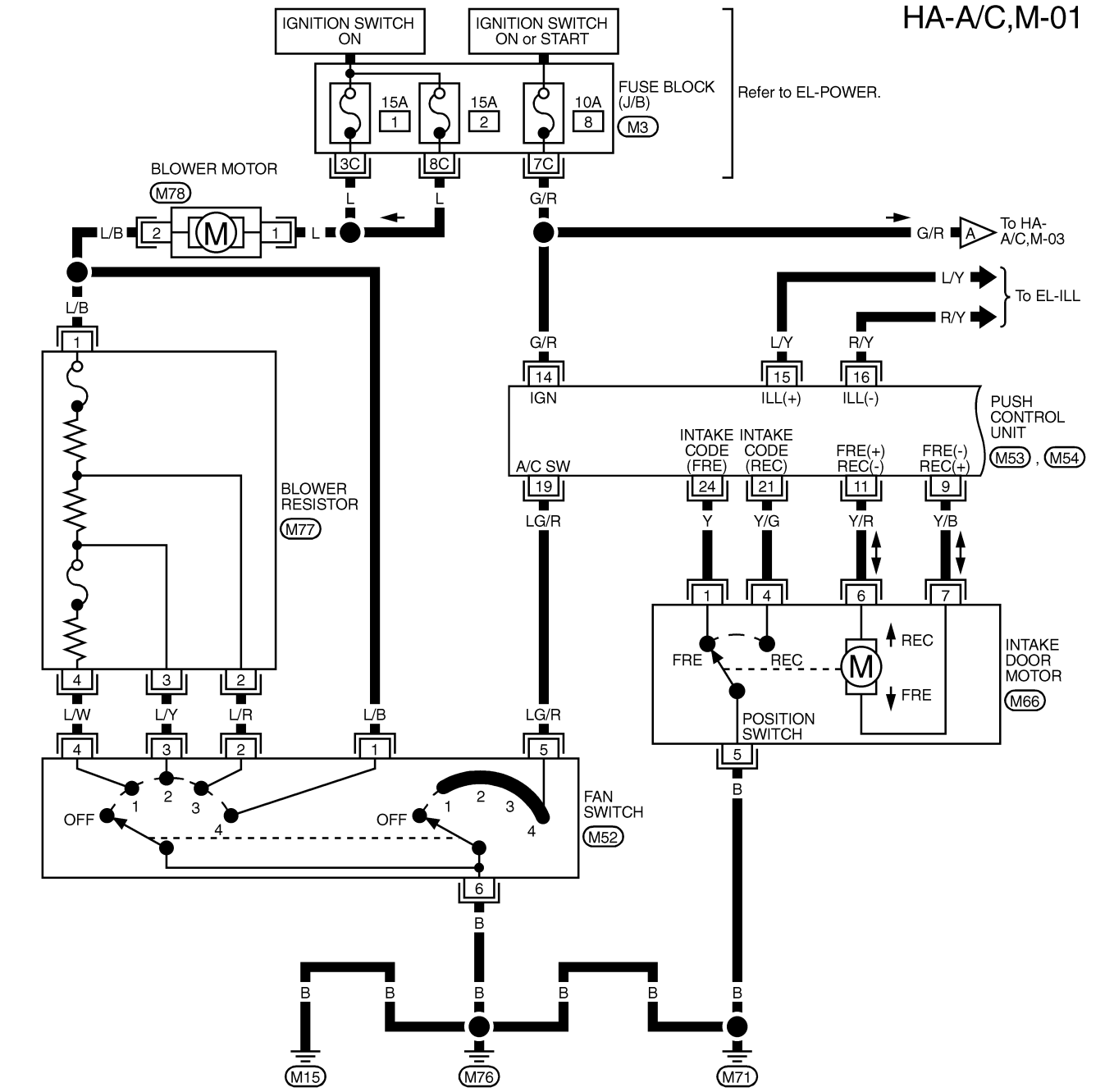

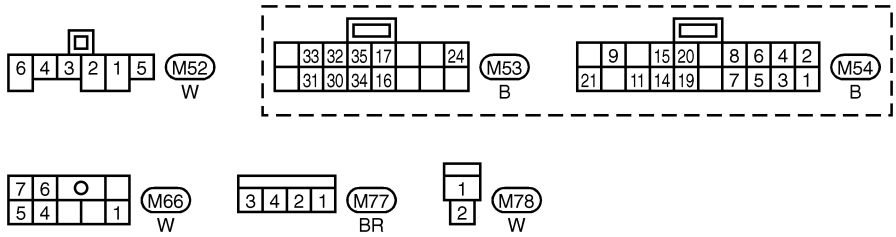

REFER TO THE FOLLOWING.
M3 -FUSE BLOCK-JUNCTION BOX (J/B)

THA254

HA-A/C,M-02

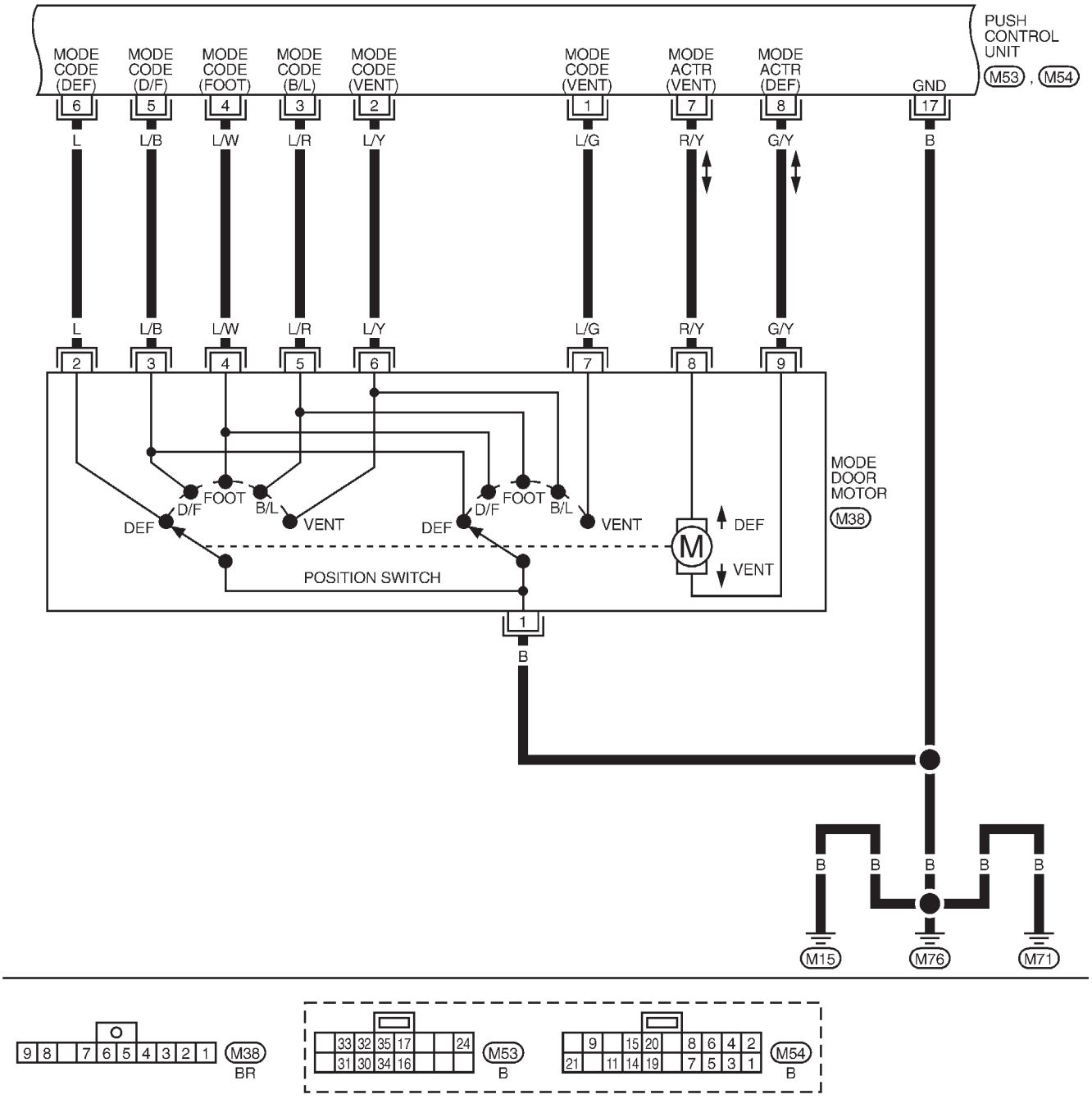

THA198

HA-A/C,M-03

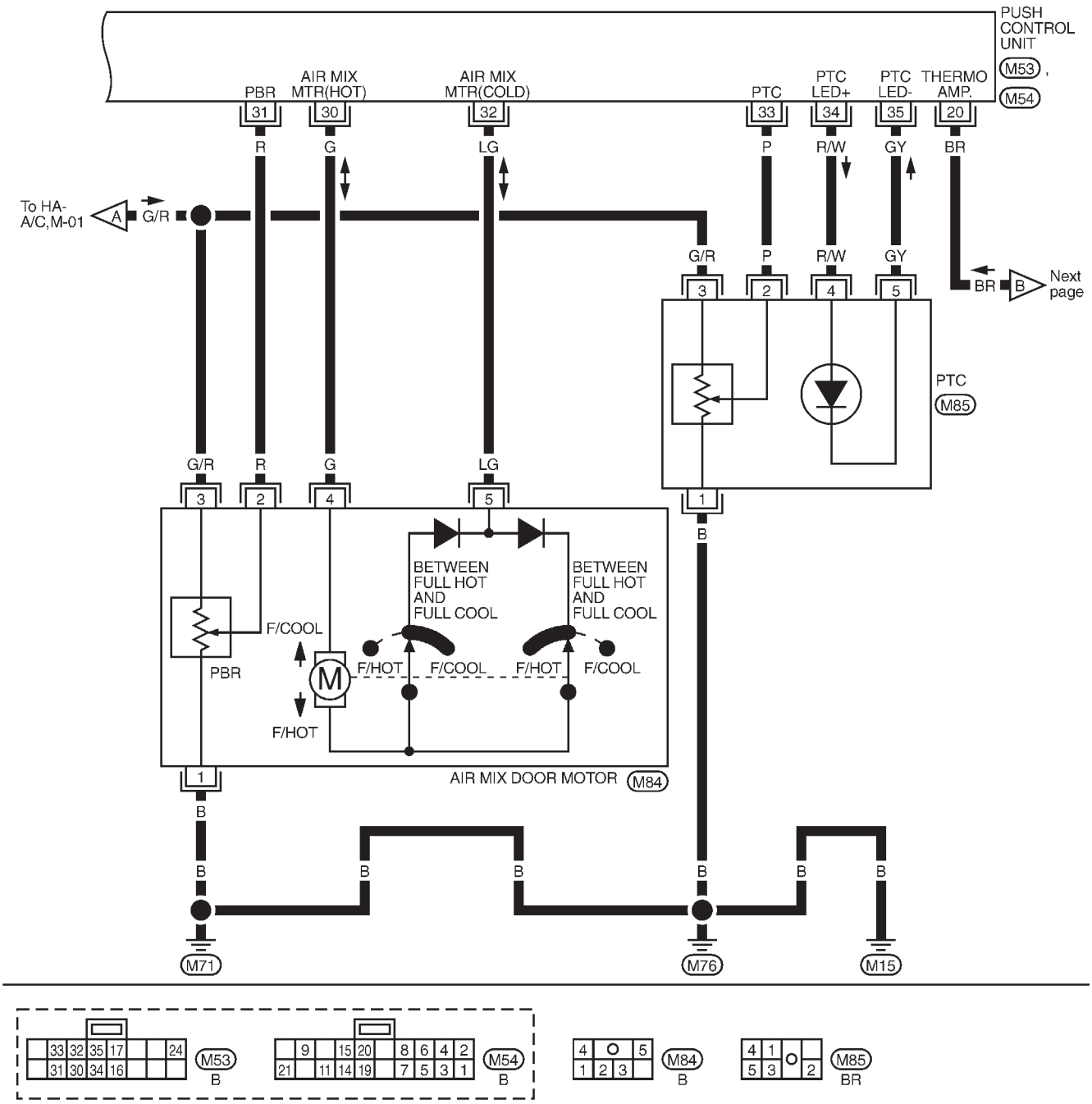

THA230

HA-A/C,M-04

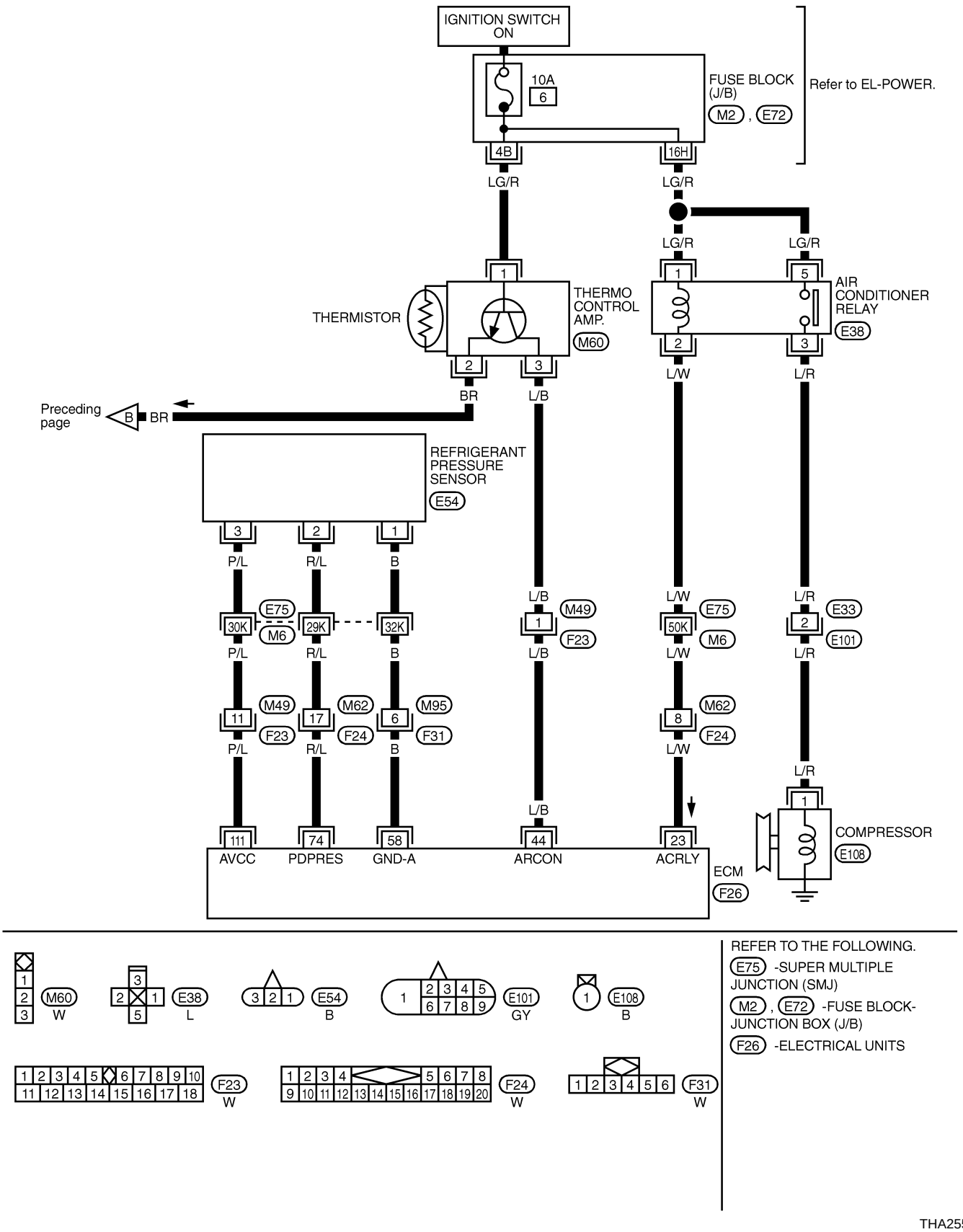
IGNITION SWITCH ON
10A
6
FUSE BLOCK (J/B)
M2 , E72
Refer to EL-POWER.
4B
16H
LG/R
LG/R
LG/R
LG/R
THERMISTOR
THERMO CONTROL AMP.
M60
AIR CONDITIONER RELAY
E38
L/W
L/R
BR
L/B
Preceding page
B
BR
REFRIGERANT PRESSURE SENSOR
E54
P/L
R/L
B
E75
M6
30K
29K
32K
L/B
M49
F23
L/W
E75
50K
M6
L/R
E33
E101
M49
F23
M62
F24
M95
F31
M62
F24
111
74
58
44
23
AVCC
PDPRES
GND-A
ARCON
ACRLY
ECM
F26
COMPRESSOR
E108
M60
W
E38
L
E54
B
E101
GY
E108
B
F23
W
F24
W
F31
W
REFER TO THE FOLLOWING.
E75 -SUPER MULTIPLE JUNCTION (SMJ)
M2 , E72 -FUSE BLOCK-JUNCTION BOX (J/B)
F26 -ELECTRICAL UNITS
THA255

How to Perform Trouble Diagnoses for Quick and Accurate Repair

NCHA0129

WORK FLOW

NCHA0129S01

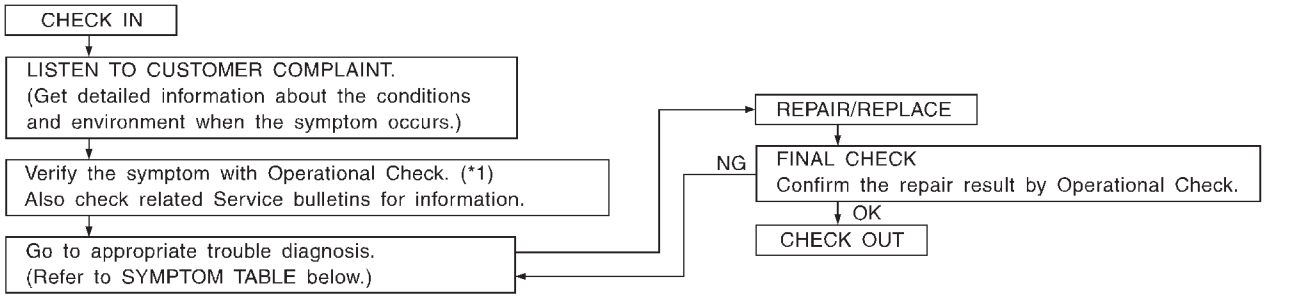

SHA900E

*1: HA-148

SYMPTOM TABLE

NCHA0129S02

Symptom	Reference page	
● A/C system does not come on.	● Go to Trouble Diagnosis Procedure for A/C System.	HA-150
● Intake door does not change in VENT, B/L or FOOT mode.	● Go to Trouble Diagnosis Procedure for Intake Door.	HA-152
● Air outlet does not change. ● Mode door motor does not operate normally.	● Go to Trouble Diagnosis Procedure for mode door motor.	HA-156
● Air mix door motor does not operate normally.	● Go to Trouble Diagnosis Procedure for Air mix door motor.	HA-162
● Blower motor does not rotate at all.	● Go to Trouble Diagnosis Procedure for Blower Motor.	HA-167
● Magnet clutch does not engage when A/C switch and fan switch are ON.	● Go to Trouble Diagnosis Procedure for Magnet Clutch.	HA-174
● Insufficient cooling.	● Go to Trouble Diagnosis Procedure for Insufficient cooling.	HA-182
● Insufficient heating.	● Go to Trouble Diagnosis Procedure for Insufficient heating.	HA-189
● Noise	● Go to Trouble Diagnosis Procedure for Noise.	HA-190

Operational Check

=NCHA0130

The purpose of the operational check is to confirm that the system operates properly.

CONDITIONS:

NCHA0130S01

- **Engine running and at normal operating temperature.**

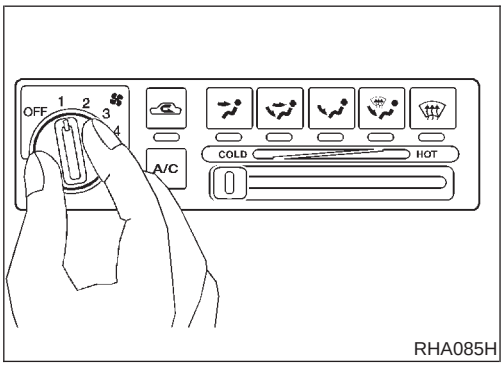

RHA085H

PROCEDURE:

NCHA0130S02

1. Check Blower

NCHA0130S0201

1. Turn fan switch to 1-speed.
   Blower should operate on 1-speed.
2. Then turn fan switch to 2-speed, and continue checking blower speed until all speeds are checked.
3. Leave blower on 4-speed.

If NG, go to trouble diagnosis procedure for blower motor (HA-167).
If OK, continue with next check.

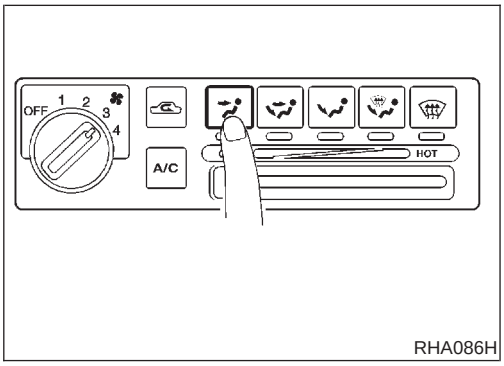

RHA086H

2. Check Discharge Air

NCHA0130S0202

1. Press each mode switch.

Discharge air flow

Mode control knob	Air outlet/distribution		
	Face	Foot	Defroster
	100%	–	–
	60%	40%	–
	–	80%	20%
	–	60%	40%
	–	–	100%

RHA654F

2. Confirm that discharge air comes out according to the air distribution table at left, and that the indicator lamp illuminates.

Refer to “Discharge Air Flow”, HA-138.
If NG, go to trouble diagnosis procedure for mode door motor (HA-156).
If OK, continue with next check.

NOTE:
Confirm that the compressor clutch is engaged (visual inspection) and intake door position is at FRESH when the DEF mode is selected.
Confirm that the intake door position is at FRESH when the D/F mode is selected.
Intake door position is checked in the next step.

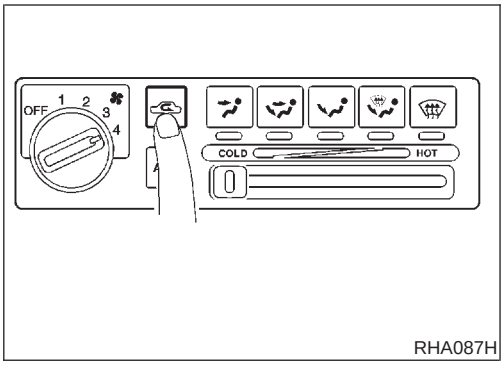

RHA087H

3. Check Recirculation

NCHA0130S0203

1. Press REC switch.
   Recirculation indicator should illuminate.
2. Listen for intake door position change (you should hear blower sound change slightly).

If NG, go to trouble diagnosis procedure for intake door (HA-152).
If OK, continue with next check.

NOTE:

- **Recirculation does not operate in DEF and D/F modes.**
- **Recirculation automatically occurs when the following conditions are met:**

a) **FACE mode.**
b) **Full cold position.**
c) **Fan switch to 4 speed.**
d) **A/C switch on.**

Recirculation indicator will not illuminate.

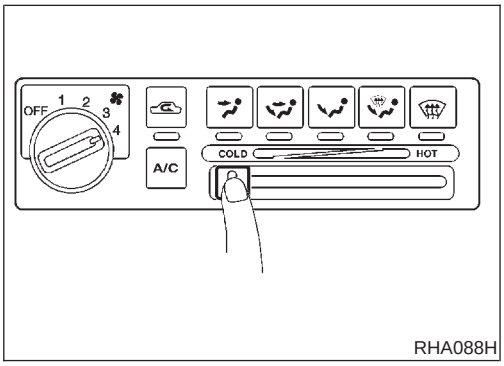

RHA088H

4. Check Temperature Decrease

NCHA0130S0204

1. Slide temperature control lever to full cold.
2. Check for cold air at discharge air outlets.

If NG, go to trouble diagnosis procedure for insufficient cooling (HA-182).
If OK, continue with next check.

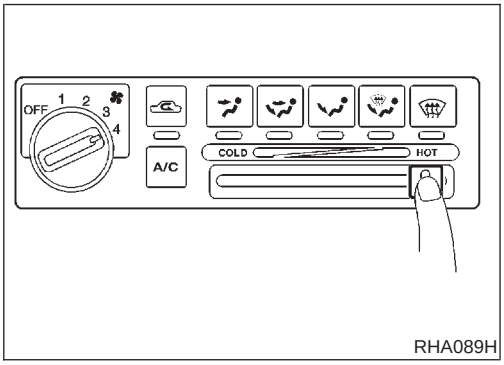

RHA089H

5. Check Temperature Increase

NCHA0130S0205

1. Slide temperature control lever to full hot.
2. Check for hot air at discharge air outlets.

If NG, go to trouble diagnosis procedure for insufficient heating (HA-189).

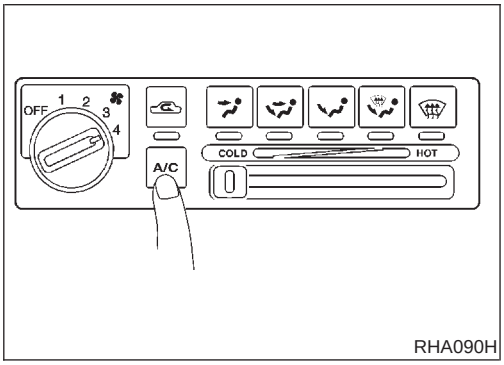

RHA090H

6. Check Air Conditioner Switch

NCHA0130S0206

Turn the fan control switch to the desired (1 to 4 speed) position and push the A/C switch to turn ON the air conditioner.
The indicator lamp should come on when air conditioner is ON.
If NG, go to trouble diagnosis procedure for magnet clutch (HA-174).

A/C System

TROUBLE DIAGNOSIS PROCEDURE FOR A/C SYSTEM

=NCHA0131

Symptom:

- **A/C system does not come on.**

INSPECTION FLOW

1. Confirm symptom by performing the following operational check.

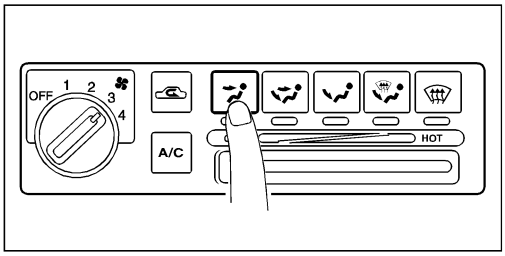

OPERATIONAL CHECK

Confirm that the system operate normally.

If OK (symptom cannot be duplicated), perform complete operational check (*2).
If NG (symptom is confirmed), continue with STEP-2 following.

2. Check for any service bulletins.

OK

3. Check main power supply and ground circuit. (*1)

OK

4. Go to A/C system circuit. (*3)

OK

5. Replace push control unit.

OK

INSPECTION END

SHA351F

*1: HA-151 *2: HA-148 *3: HA-151

MAIN POWER SUPPLY AND GROUND CIRCUIT CHECK

=NCHA0132

Power Supply Circuit Check

NCHA0132S01

Check power supply circuit for air conditioner system.
Refer to EL-10, "Wiring Diagram — POWER —".

A/C SYSTEM CIRCUIT

NCHA0191

SYMPTOM:

- **A/C system does not come on.**

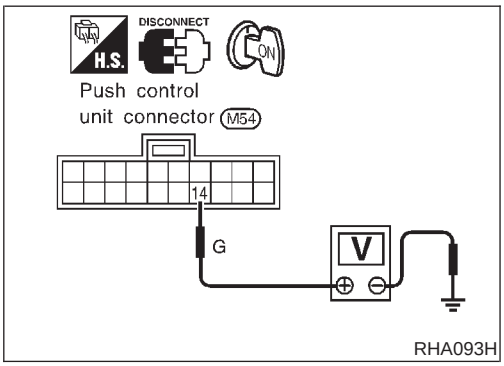

Push Control Unit Check

NCHA0191S01

Check power supply circuit for push control unit with ignition switch ON.

1) Disconnect push control unit harness connector.
2) Connect voltmeter from harness side.
3) Measure voltage across terminal No. 14 and body ground.

Voltmeter terminal		Voltage
(+)	(−)	
14	Body ground	Approx. 12V

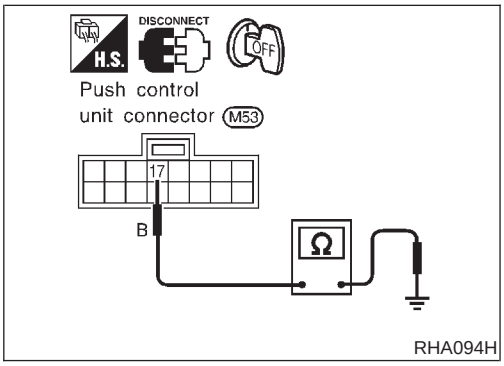

Check body ground circuit for push control unit with ignition switch OFF.

1) Disconnect push control unit harness connector.
2) Connect ohmmeter from harness side.
3) Check for continuity between terminal No. 17 and body ground.

Ohmmeter terminal		Continuity
(+)	(−)	
17	Body ground	Yes

Intake Door

TROUBLE DIAGNOSIS PROCEDURE FOR INTAKE DOOR

=NCHA0133

SYMPTOM:

- **Intake door does not change.**

INSPECTION FLOW

1. Confirm symptom by performing the following operational check.

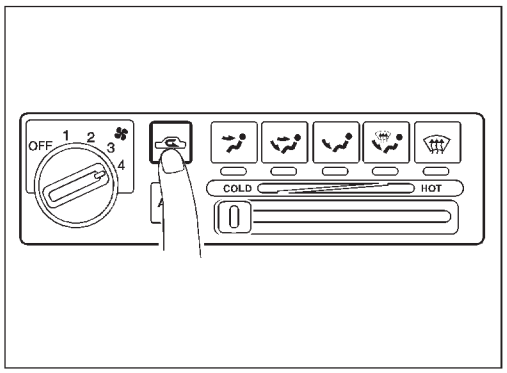

OPERATIONAL CHECK – Recirculation

1) Press recirculation switch.
   Recirculation indicator should light.
2) Listen for intake door position change (you should hear blower sound change slightly).

NOTE:

- **Confirm that the RECIRCULATION (REC) switch is canceled in the DEF ( ) and D/F ( ) mode.**
- **If OK (symptom cannot be duplicated), perform complete operational check. (*2)**
  If NG (symptom is confirmed), continue with STEP-2 following.

2. Check for any service bulletins.

3. Check intake door motor circuit. (*1)

OK

If the symptom still exist, perform a complete operational check (*2) and check for other symptoms.
[Refer to symptom table, (*3).]
Does another symptom exist?

Yes → Go to Trouble Diagnosis for related symptom.
[Another symptom exists.]

No → INSPECTION END

SHA182F

*1: HA-153 *2: HA-148 *3: HA-147

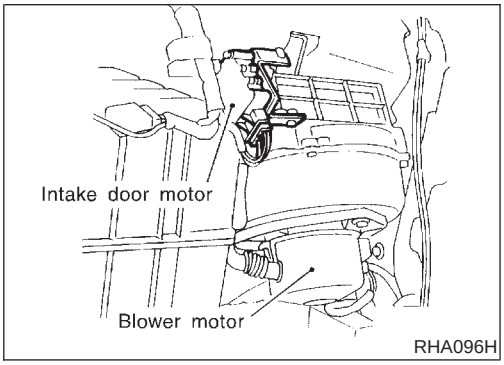

RHA096H

COMPONENT DESCRIPTION

NCHA0134

Intake Door Motor

NCHA0134S01

The intake door motor is attached to the intake unit. It rotates so that air is drawn from inlets set by each mode switches. Motor rotation is conveyed to a lever which activates the intake door.
RECIRCULATION switch is canceled by MODE switch in DEF and D/F modes.

INTAKE DOOR MOTOR CIRCUIT

=NCHA0135

SYMPTOM:

- **Intake door does not change.**

1	CHECK POWER SUPPLY FOR INTAKE DOOR MOTOR

Disconnect intake door motor harness connector.
Do approx. 12 volts exist between push control unit harness terminal Nos. 9, 11 and body ground?

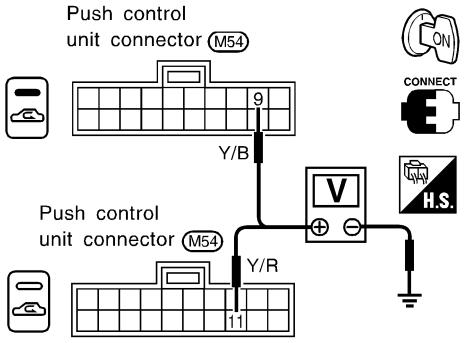

SHA366F

Yes or No

Yes	▶	GO TO 3.
No	▶	GO TO 2.

2	CHECK CIRCUIT CONTINUITY BETWEEN INTAKE DOOR MOTOR AND PUSH CONTROL UNIT

Check circuit continuity between push control unit harness terminal Nos. 9 (11) and intake door motor harness terminal Nos. 7 (6).

Continuity should exist.

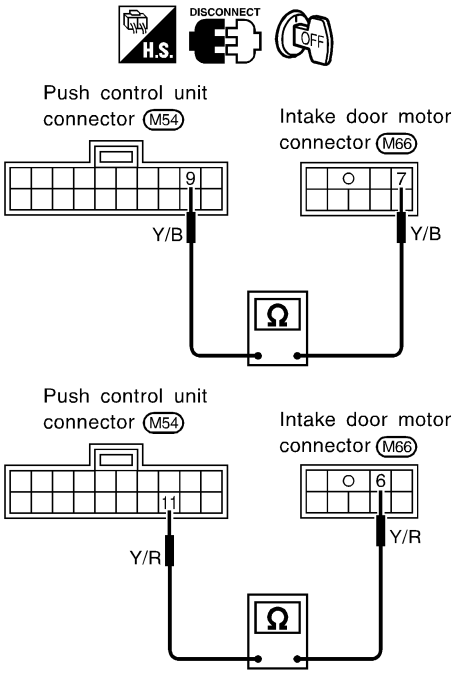

RHA098HA

If OK, check harness for short.

Yes or No

Yes	▶	Replace push control unit.
No	▶	Repair harness or connector.

3	CHECK CIRCUIT CONTINUITY OF INTAKE DOOR MOTOR

Check circuit continuity between intake door motor harness terminal No. 6 and No. 7.

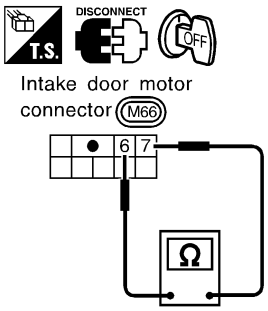

RHA099HA

OK or NG

OK	▶	GO TO 4.
NG	▶	Replace intake door motor.

4	CHECK INTAKE DOOR LINKAGE

Refer to Control Linkage Adjustment. (HA-155)

OK or NG

OK	▶	GO TO 5.
NG	▶	Repair or adjust.

5	CHECK FOR OUTPUT OF PUSH CONTROL UNIT

Do approx. 5 volts exist between intake door motor harness terminal Nos. 1, 4 and body ground?

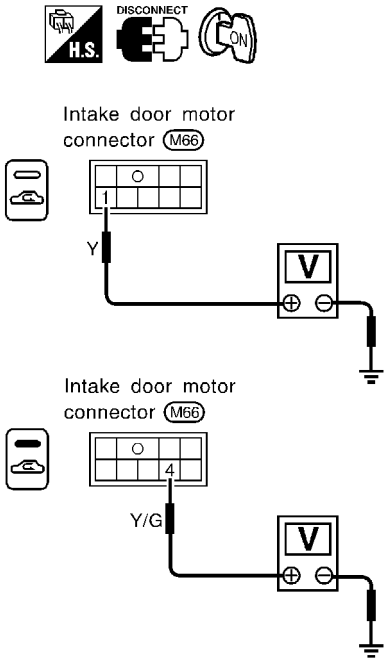

RHA100H

Yes or No

Yes	▶	GO TO 6.
No	▶	GO TO 7.

6	CHECK BODY GROUND CIRCUIT FOR INTAKE DOOR MOTOR

Check circuit continuity between intake door motor harness terminal No. 5 and body ground.

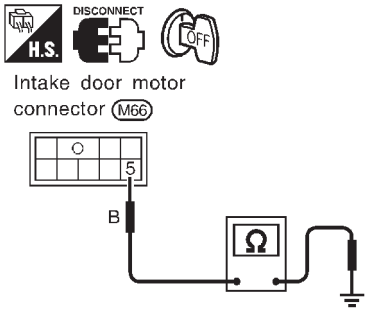

RHA101H

OK or NG

OK	▶	Replace intake door motor.
NG	▶	Repair harness or connector.

7	CHECK CIRCUIT CONTINUITY BETWEEN INTAKE DOOR MOTOR AND PUSH CONTROL UNIT

Check circuit continuity between intake door motor harness terminal Nos. 1, (4) and push control unit harness terminal Nos. 24, (21).

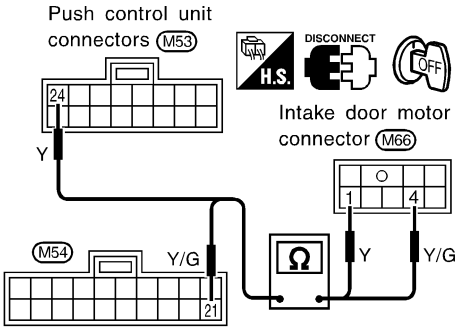

RHA907H

Terminal No.		Continuity
Intake door motor	Push control unit	
(1)	(24)	Yes
(4)	(21)	

MTBL0132

OK or NG

OK	▶	Replace push control unit.
NG	▶	Repair harness or connector.

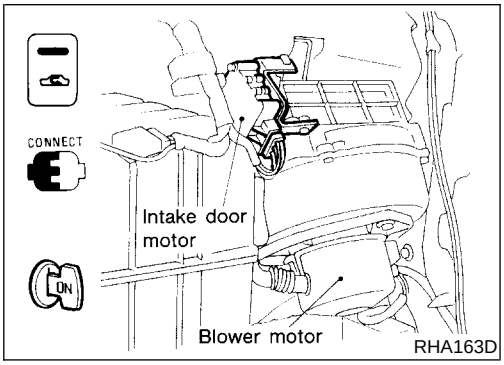

CONTROL LINKAGE ADJUSTMENT

NCHA0136

Intake Door Motor

NCHA0136S01

1. Install intake door motor on intake unit.
   Ensure that the intake door motor lever is fitted into the slit portion of intake door link.
2. Connect the intake door motor harness connector.
3. Turn ignition switch to "ON" position.
4. Check that intake door operates properly when REC switch is turned ON and OFF.

Mode Door Motor

TROUBLE DIAGNOSIS PROCEDURE FOR MODE DOOR MOTOR

=NCHA0137

SYMPTOM:

- **Air outlet does not change.**
- **Mode door motor does not operate normally.**

INSPECTION FLOW

1. Confirm symptom by performing the following operation.

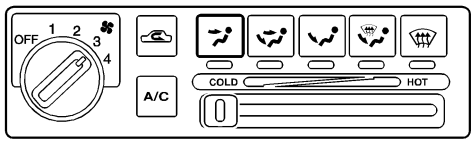

Discharge air flow

Mode control knob	Air outlet/distribution		
	Face	Foot	Defroster
	100%	–	–
	60%	40%	–
	–	80%	20%
	–	60%	40%
	–	–	100%

OPERATIONAL CHECK – Mode door motor

a. Press each mode switch.
b. Confirm that discharge air comes out according to the distribution table at left, and that the indicator lamp. Refer to “Discharge Air Flow”, (*1).

If OK (symptom cannot be duplicated), perform complete operational check. (*2)
If NG (symptom is confirmed), continue with STEP-2 following.

NOTE:
Confirm that the compressor clutch is engaged (visual inspection) and intake door position is at FRESH when the DEF mode is selected.
Confirm that the intake door position is at FRESH when the D/F mode is selected.

↓

2. Check for any service bulletins.

↓

3. Check Main Power Supply and Ground Circuit Check. (*3)

↓ OK

4. Check mode door motor circuit. (*4)

↓ OK

5. If the symptom still exists, perform a complete operational check (*2) and check for other symptoms. [Refer to symptom table, (*5).] Does another symptom exist?

→ Yes → Go to Trouble Diagnosis for related symptom. **[Another symptom exists.]**

↓ No

INSPECTION END

SHA364F

*1: HA-138
*2: HA-148
*3: HA-151
*4: HA-158
*5: HA-147

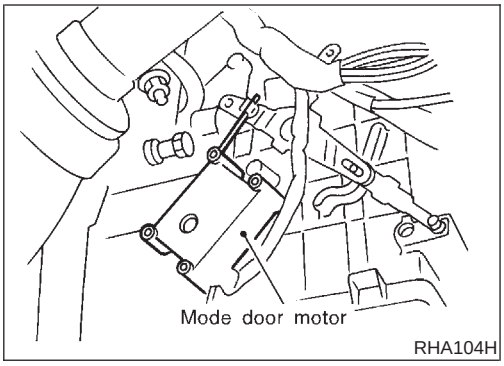

COMPONENT DESCRIPTION

NCHA0179

Mode Door Motor

NCHA0179S01

The mode door motor is attached to the heater unit. It rotates so that air is discharged from the outlet set by the auto amp. Motor rotation is conveyed to a link which activates the mode door.

MODE DOOR MOTOR CIRCUIT

=NCHA0138

SYMPTOM:

- **Air outlet does not change.**
- **Mode door motor does not operate normally.**

1	CHECK FOR OUTPUT OF PUSH CONTROL UNIT

Disconnect mode door motor harness connector.
Change the mode from FACE to DEF, or from DEF to FACE. Do approx. 12 volts exist between push control unit harness terminal No. 7 and No. 8 in both cases?

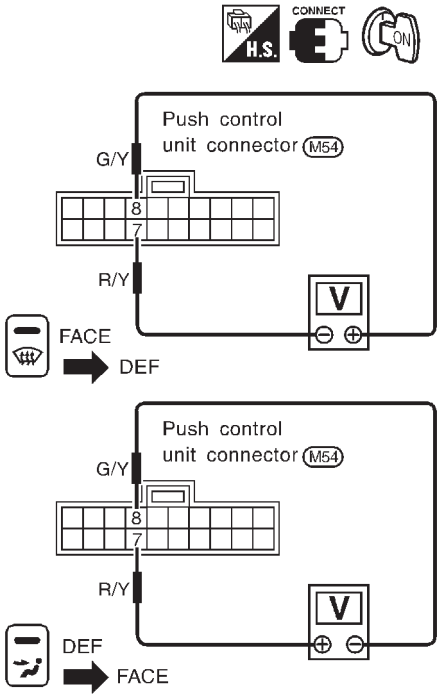

RHA105H

Yes or No

Yes	▶	GO TO 3.
No	▶	GO TO 2.

2	CHECK CIRCUIT CONTINUITY BETWEEN MODE DOOR MOTOR AND PUSH CONTROL UNIT

Check circuit continuity between mode door motor harness terminal Nos. 8, (9) and push control unit terminal Nos. 7, (8).

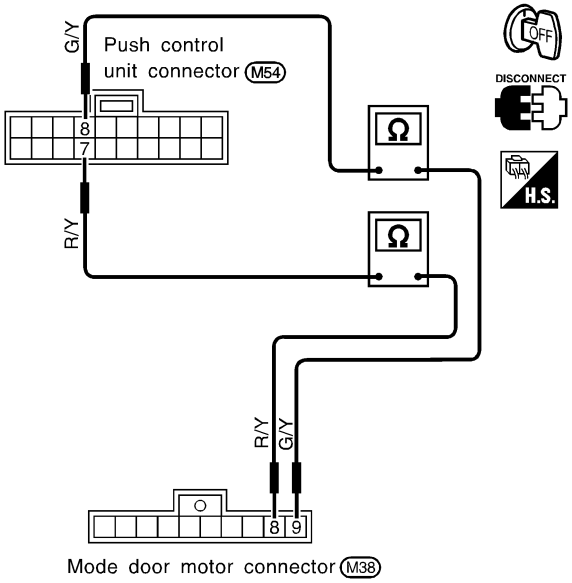

RHA106HA

OK or NG

OK	▶	Replace push control unit.
NG	▶	Repair harness or connector.

3	CHECK MODE DOOR MOTOR CIRCUIT

Check circuit continuity between mode door motor harness terminal No. 8 and No. 9.

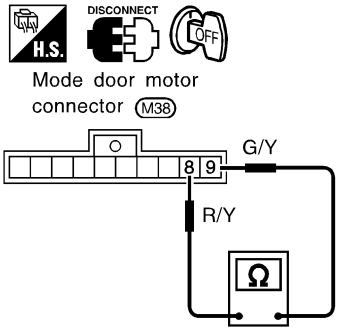

RHA908H

OK or NG

OK	▶	GO TO 4.
NG	▶	Replace mode door motor.

4	CHECK FOR OUTPUT OF PUSH CONTROL UNIT

Do approx. 5 volts exist between push control unit harness terminal Nos. 1, 2, 3, 4, 5, 6 and body ground?

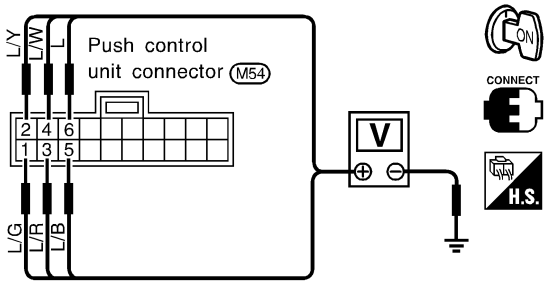

SHA444F

OK or NG

OK	▶	GO TO 5.
NG	▶	GO TO 6.

5	CHECK GROUND CIRCUIT FOR MODE DOOR MOTOR

Check circuit continuity between mode door motor harness terminal No. 1 and body ground.

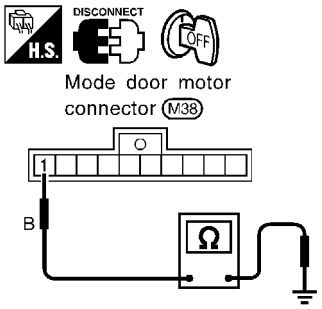

RHA109H

OK or NG

OK	▶	CHECK SIDE LINK (Refer to HA-161.)
NG	▶	Repair harness or connector.

6	CHECK CIRCUIT CONTINUITY BETWEEN PUSH CONTROL UNIT AND MODE DOOR MOTOR

Disconnect push control unit harness connector.
Check circuit continuity between each terminal control unit and mode door motor.

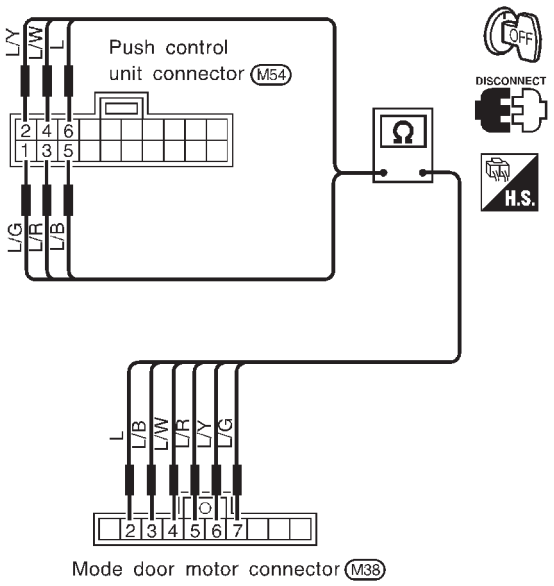

RHA110H

Terminal No.		Continuity
Push control unit	Mode door motor	
6	2	Yes
5	3	
4	4	
3	5	
2	6	
1	7	

MTBL0387

OK or NG

OK	▶	Replace push control unit.
NG	▶	Repair harness or connector.

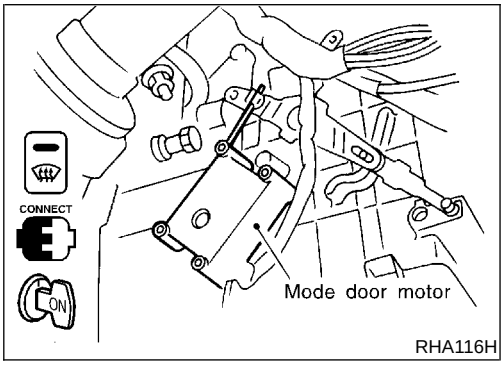

RHA116H

CONTROL LINKAGE ADJUSTMENT

NCHA0139

Mode Door

NCHA0139S01

1. Move side link by hand and hold mode door in DEF mode.
2. Connect door motor to main harness.
3. Turn ignition switch ON.
4. Select DEF mode.
5. Install mode door motor on heater unit.
6. Attach mode door motor rod to side link rod holder.

After installing the mode door motor, check for proper operation.

Air Mix Door

TROUBLE DIAGNOSIS PROCEDURE FOR AIR MIX DOOR MOTOR

=NCHA0140

SYMPTOM:

- **Air mix door motor does not operate normally.**

INSPECTION FLOW

1. Confirm symptom by performing the following operational check.

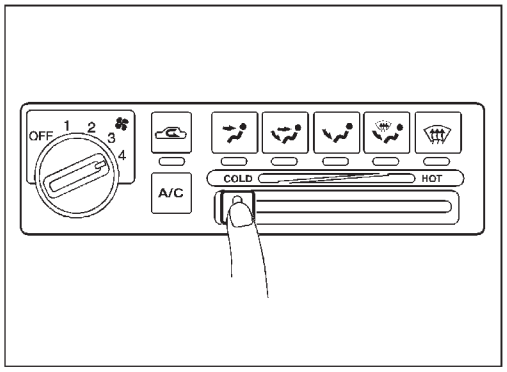

OPERATIONAL CHECK – Temperature decrease and increase

1. Check Temperature Decrease
1) Slide temperature control lever to full cold.
2) Check for cold air at discharge air outlets.

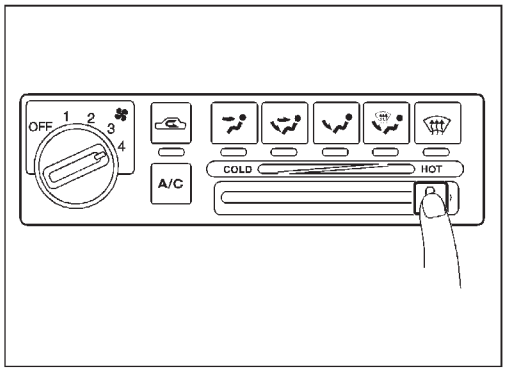

2. Check Temperature Increase
1) Slide temperature control lever to full hot.
2) Check for hot air at discharge air outlets.

If OK (symptom cannot be duplicated). Perform complete operational check. (*3)
If NG (symptom is confirmed), continue with STEP-2 following.

2. Check for any service bulletins.

3. Check air mix door. (*1)

OK

4. Check air mix door motor circuit. (*2)

OK

If the symptom still exist, perform a complete operational check and check for other symptoms.
[Refer to symptom table.]
Does another symptom exist?

Yes → Go to Trouble Diagnosis for related symptom.

[Another symptom exists.]

No → INSPECTION END

SHA184F

*1: HA-163 *2: HA-165 *3: HA-148

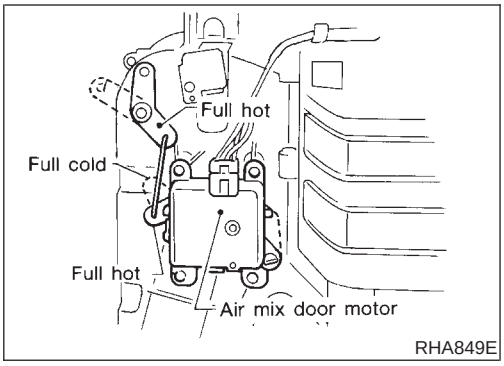

RHA849E

COMPONENT DESCRIPTION

NCHA0141

Air Mix Door Motor

NCHA0141S01

The air mix door motor is attached to the bottom of the heater unit. It rotates so that the air mix door is opened to a position set by the PTC. Motor rotation is then conveyed through a shaft and air mix door position is then fed back to the push control unit by PBR built-in air mix door motor.

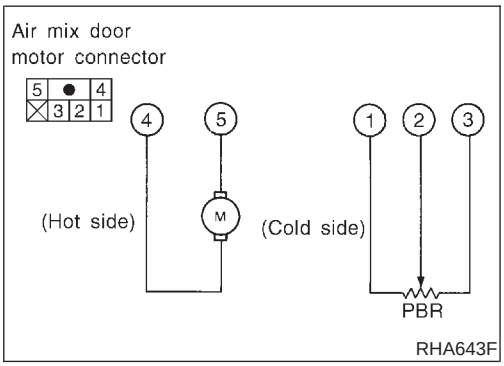

RHA643F

4	5	Air mix door operation	Direction of lever movement
(+)	(−)	COLD → HOT	Clockwise (Toward passenger compartment)
—	—	STOP	STOP
(−)	(+)	HOT → COLD	Counterclockwise (Toward engine compartment)

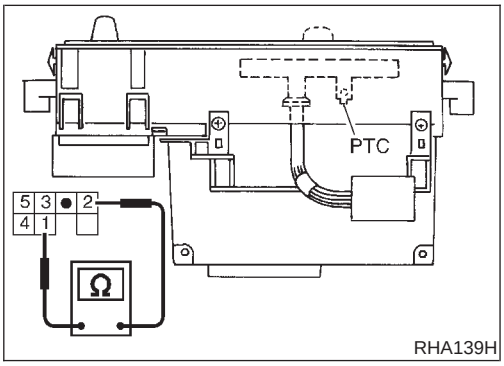

RHA139H

CONTROL SYSTEM INPUT COMPONENTS

NCHA0144

Potentio Temperature Control (PTC)

NCHA0144S01

The PTC is built into the control unit. It has a variable resistance which changes according to the set temperature. This resistance is connected to the temperature control lever.

PTC

NCHA0144S0101

After disconnecting PTC harness connector, measure resistance between terminals 1 and 2 at PTC harness side.

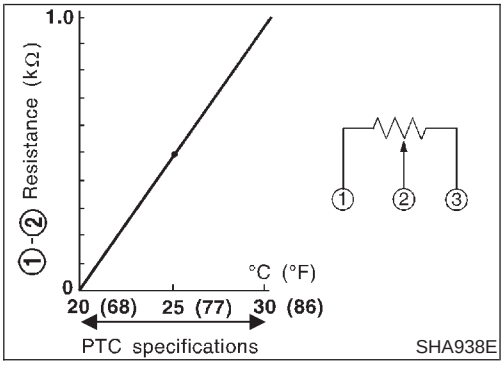

SHA938E

PBR

NCHA0144S02

Measure resistance between terminals 1 and 2 at vehicle harness side.

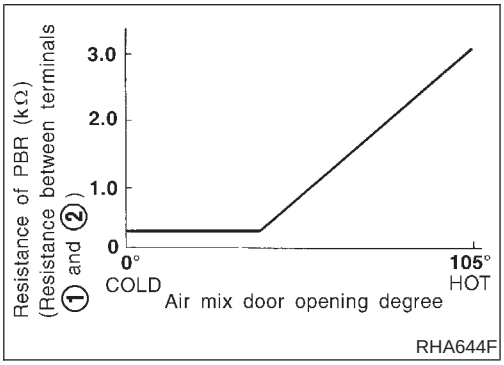

RHA644F

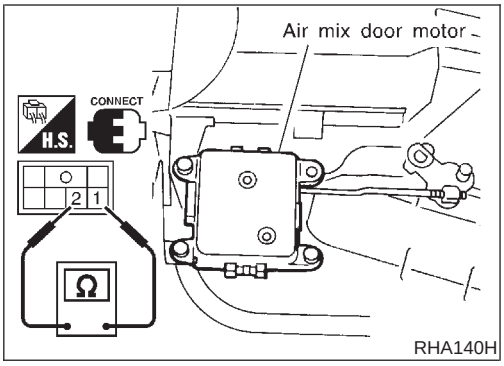

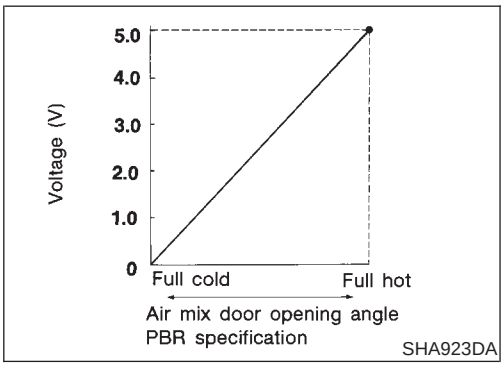

Ignition Switch: ON

NCHA0144S0201

- Ensure tester pointer deflects smoothly when PTC is moved from full cool to full hot and vice versa.

AIR MIX DOOR MOTOR CIRCUIT

=NCHA0142

SYMPTOM:

- **Air mix door motor does not operate normally.**

1	CHECK POWER SUPPLY FOR PUSH CONTROL UNIT	
Refer to Main Power Supply and Ground Circuit Check (HA-151).		
	OK or NG	
OK	▶	GO TO 2.
NG	▶	Repair or replace.

2	CHECK PTC	
Refer to CONTROL SYSTEM INPUT COMPONENTS HA-163.		
	OK or NG	
OK	▶	GO TO 3.
NG	▶	Replace PTC.

3	CHECK PBR	
Refer to CONTROL SYSTEM INPUT COMPONENTS HA-163.		
	OK or NG	
OK	▶	GO TO 4.
NG	▶	Replace PBR.

4 CHECK FOR OUTPUT OF PUSH CONTROL UNIT

Do approx. 10.5 volts exist between air mix door motor harness terminal Nos. 4, 5 and body ground?

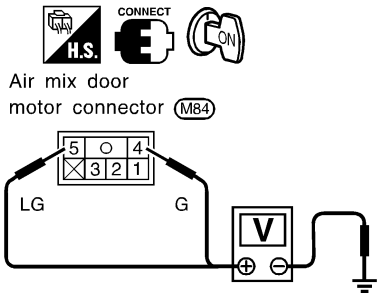

RHA612FD

Air mix door operation	Terminal No. (+)	Terminal No. (–)	Voltage
Cold → Hot	4	Body ground	Approx. 10.5V
Hot → Cold	5		

MTBL0379

	Yes or No	
Yes	▶	GO TO 5.
No	▶	Replace auto amp.

5	CHECK CIRCUIT CONTINUITY BETWEEN AIR MIX DOOR MOTOR AND PUSH CONTROL UNIT

Check circuit continuity between air mix door motor harness terminal Nos. 5 (4) and push control unit harness terminal Nos. 32 (30).

Continuity should exist.

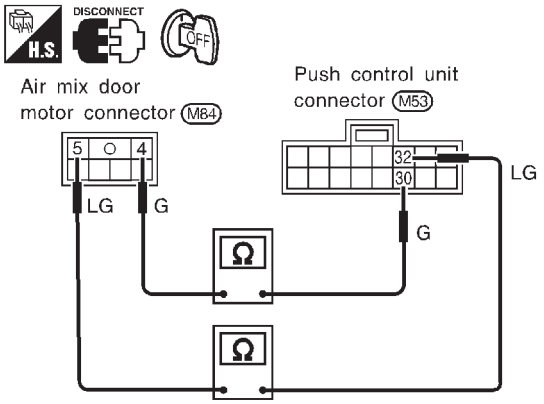

RHA137H

If OK, check harness for short.

OK or NG

OK	▶	Replace air mix door motor.
NG	▶	Repair harness or connector.

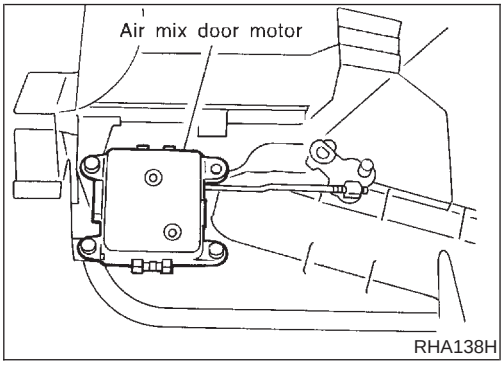

RHA138H

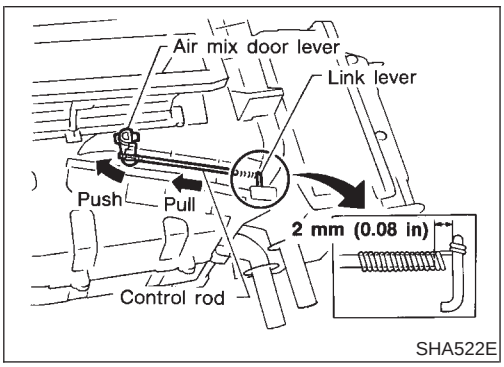

SHA522E

CONTROL LINKAGE ADJUSTMENT

NCHA0143

Air Mix Door

NCHA0143S01

1. Install air mix door motor on heater unit and connect it to the air mix door motor harness.
2. Set PTC at full cool and air mix door motor at "full cold".
3. Move air mix door lever by hand and hold it at the full-cold position.
4. Attach air mix door lever to rod holder.
5. Check that air mix door operates properly when PTC is moved from full cool to full hot.

Water Cock Control Rod

NCHA0143S02

- **Remove the air mix door motor before adjusting water cock control rod.**

1. Push air mix door lever in direction of arrow.
2. Pull control rod of water cock in direction of arrow so as to make clearance of about 2 mm (0.08 in) between ends of rod and link lever and connect the rod to door lever.

After connecting control rod, check it operates properly.

Blower Motor

TROUBLE DIAGNOSIS PROCEDURE FOR BLOWER MOTOR

=NCHA0145

SYMPTOM:

- **Blower motor does not rotate at all.**

INSPECTION FLOW

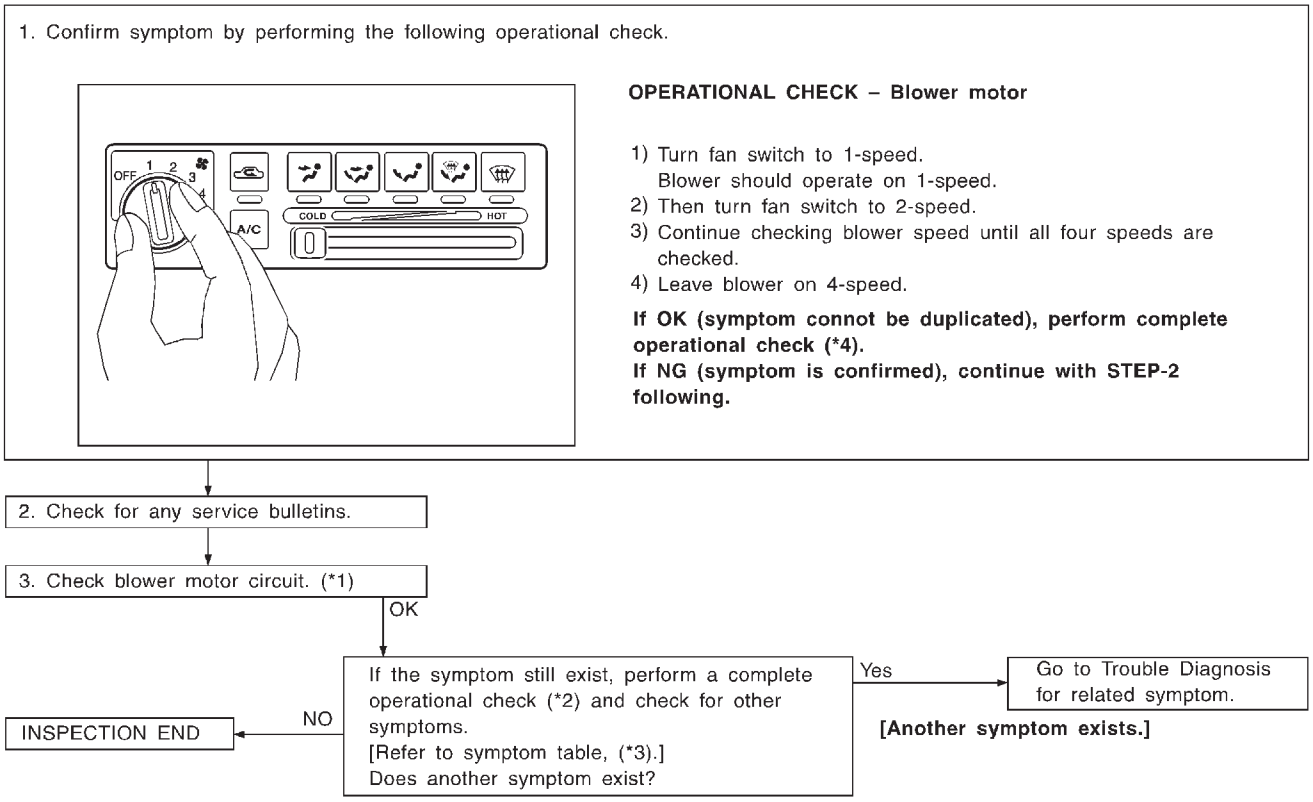

SHA185F

*1: HA-168
*2: HA-148
*3: HA-147
*4: HA-148

BLOWER MOTOR CIRCUIT

=NCHA0147

SYMPTOM:

- **Blower motor does not rotate.**

Symptom table No.	INCIDENT
1	Fan fails to rotate.
2	Fan does not rotate at 1-speed.
3	Fan does not rotate at 2-speed.
4	Fan does not rotate at 3-speed.
5	Fan does not rotate at 4-speed.

1	**DIAGNOSTIC PROCEDURE**	
Check if blower motor rotates properly at each fan speed. Conduct checks as per symptom table at above.		
1	▶	GO TO 2.
2, 3, 4	▶	GO TO 8.
5	▶	GO TO 10.

2	**CHECK POWER SUPPLY FOR BLOWER MOTOR**	
1. Disconnect blower motor harness connector. 2. Do approx. 12 volts exist between blower motor harness terminal No. 1 and body ground?		

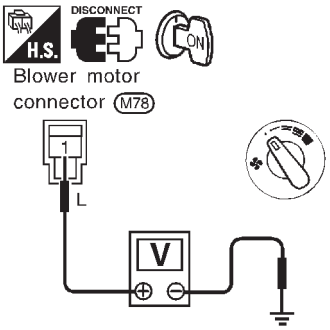

RHA343FB

Yes or No

Yes	▶	GO TO 3.
No	▶	Check 15A (Nos. 1 and 2) fuses at fuse block. Refer to EL-14, "Wiring Diagram — POWER —".

3	CHECK CIRCUIT CONTINUITY FOR BLOWER MOTOR

1. Turn fan control knob to any position except OFF.
2. Check circuit continuity between blower motor harness terminal No. 2 and body ground.
   Continuity should exist.

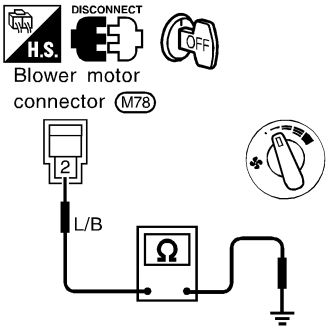

RHA344FB

OK or NG

OK	▶	GO TO 4.
NG	▶	Reconnect blower motor harness connector. GO TO 5.

4	CHECK BLOWER MOTOR

(Refer to Electrical Components Inspection.)
(HA-173)

OK or NG

OK	▶	INSPECTION END
NG	▶	Replace blower motor.

5	CHECK BLOWER MOTOR CIRCUIT BETWEEN BLOWER MOTOR AND RESISTOR

Do approx. 12 volts exist between resistor harness terminal No. 1 and body ground?

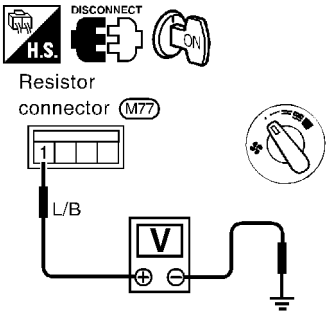

RHA575FA

Yes or No

Yes	▶	Disconnect fan switch harness connector. GO TO 7.
No	▶	Disconnect blower motor and resistor harness connectors. GO TO 6.

6	CHECK CIRCUIT CONTINUITY BETWEEN BLOWER MOTOR AND RESISTOR

Check circuit continuity between blower motor harness terminal No. 2 and resistor harness terminal No. 1.
Continuity should exist.

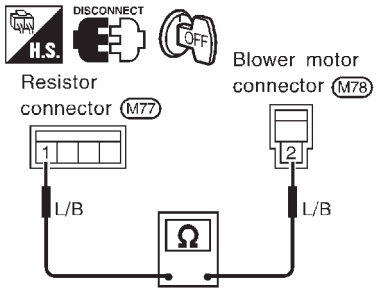

RHA576FA

OK or NG

OK	▶	Check harness for short.
NG	▶	Repair harness or connector.

7	CHECK GROUND CIRCUIT FOR FAN SWITCH

Check circuit continuity between fan switch harness terminal No. 6 and body ground.

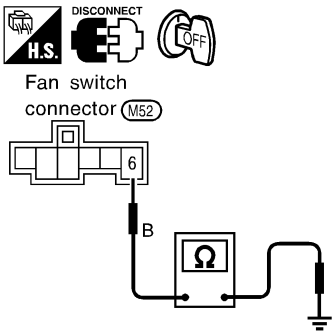

RHA583H

OK or NG

OK	▶	GO TO 8.
NG	▶	Repair harness or connector.

8	CHECK RESISTOR AFTER DISCONNECTING IT

(Refer to Electrical Components Inspection.)
(HA-173)

OK or NG

OK	▶	GO TO 9.
NG	▶	Replace resistor.

9	CHECK RESISTOR HARNESS CONNECTOR

Reconnect resistor harness connector.

OK or NG

1	▶	GO TO 12.
2, 3, 4	▶	GO TO 10.

10	CHECK FAN SWITCH CIRCUIT

Do approx. 12 volts exist between each fan switch harness terminal and body ground?

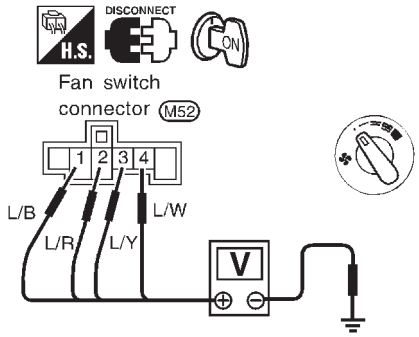

RHA122H

Symptom table No.	Terminal No.		Voltage
	(+)	(−)	
2	4	Body ground	Approx. 12V
3	3		
4	2		
5	1		

MTBL0380

Yes or No

Yes	▶	GO TO 12.
No	▶	GO TO 11.

11	CHECK CIRCUIT CONTINUITY BETWEEN FAN SWITCH HARNESS TERMINAL AND RESISTOR HARNESS TERMINAL

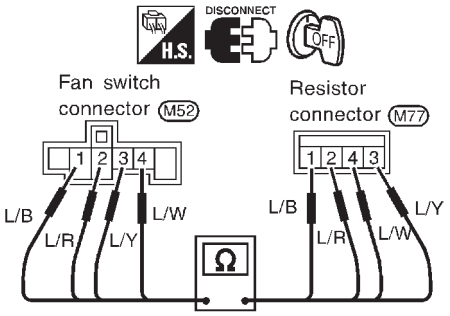

RHA123H

Terminal No.		Continuity
Fan Switch	Resistor	
1	1	Yes
2	2	
3	3	
4	4	

MTBL0381

OK or NG

OK	▶	Check harness for short.
NG	▶	Repair harness or connector.

12	CHECK FAN SWITCH AFTER DISCONNECTING IT

(Refer to Electrical Components Inspection.)
(HA-173)

OK or NG

OK	▶	INSPECTION END
NG	▶	Replace fan switch.

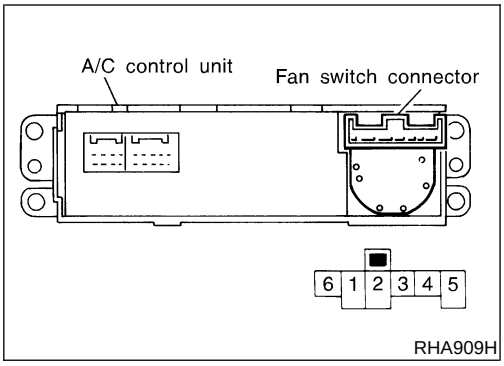

ELECTRICAL COMPONENTS INSPECTION

=NCHA0146

Fan Switch

NCHA0146S01

Check continuity between terminals at each switch position.

KNOB POSITION	Continuity between terminals
OFF	No continuity
1	4 — 5 — 6
2	3 — 5 — 6
3	2 — 5 — 6
4	1 — 5 — 6

Blower Motor

NCHA0146S02

Confirm smooth rotation of the blower motor.

- Ensure that there are no foreign particles inside the intake unit.

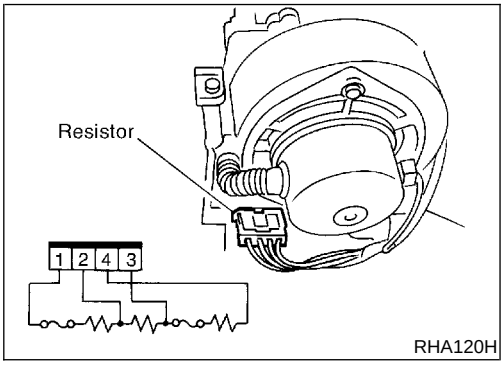

Blower Resistor

NCHA0146S03

Check resistance between terminals.

Terminal No.		Resistance
(+)	(−)	
3	1	Approx. 1.4 - 1.6Ω
4		Approx. 2.5 - 2.8Ω
2		Approx. 0.5 - 0.6Ω

Magnet Clutch

TROUBLE DIAGNOSIS PROCEDURE FOR MAGNET CLUTCH

=NCHA0155

SYMPTOM:

- **Magnet clutch does not operate when A/C switch and fan switch are ON.**

INSPECTION FLOW

1. Confirm symptom by performing the following operational check.

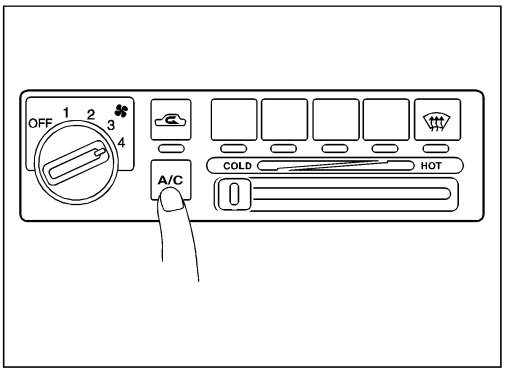

OPERATIONAL CHECK – A/C switch

Turn fan switch to the desired (1 to 4-speed) position and push the air conditioner switch to turn ON the air conditioner. The indicator light should come on when air conditioner is ON.

If OK (symptom cannot be duplicated), perform complete operational check. (*3)
If NG (symptom is confirmed), continue with STEP-2 following.

2. Check for any service bulletins.

3. Check compressor belt tension.
   Refer to MA-(*5), “Checking Drive Belts”.
   - NG → Adjust or replace compressor belt.
   - OK ↓

4. Check refrigerant.
   Connect manifold gauge then check system pressure.
   - NG → Check for refrigerant leaks. Refer to (*1).
   - OK ↓

5. Check magnet clutch circuit. (*2)
   - OK ↓

If the symptom still exist, perform a complete operational check (*3) and check for other symptoms.
[Refer to symptom table, (*4).]
Does another symptom exist?

- Yes → Go to Trouble Diagnosis for related symptom.
  [Another symptom exists.]
- No → INSPECTION END

SHA359F

*1: HA-204
*2: HA-175
*3: HA-148
*4: HA-147
*5: MA-13

MAGNET CLUTCH CIRCUIT

=NCHA0156

SYMPTOM:

- **Magnet clutch does not engage when A/C switch and fan switch are ON.**

1	CHECK POWER SUPPLY FOR COMPRESSOR

Disconnect compressor harness connector.
Do approx. 12 volts exist between compressor harness terminal No. 1 and body ground?

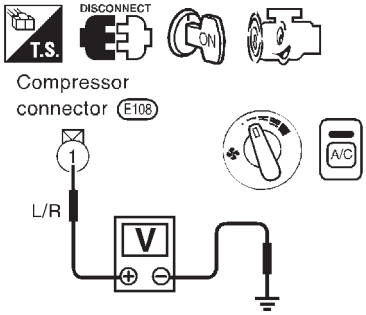

RHA747FG

Yes or No

Yes	▶	GO TO 2.
No	▶	Disconnect A/C relay. GO TO 3.

2	CHECK MAGNET CLUTCH COIL

OK or NG

NG	▶	Replace magnet clutch. Refer to HA-197.

3	CHECK CIRCUIT CONTINUITY BETWEEN A/C RELAY AND COMPRESSOR HARNESS

Check circuit continuity between A/C relay harness terminal No. 3 and compressor harness terminal No. 1.
Continuity should exist.

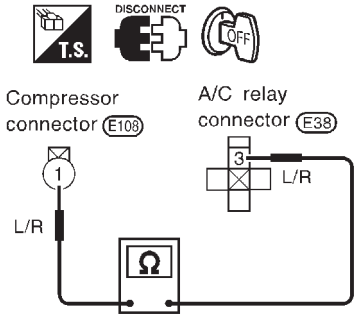

RHA127H

If OK, check harness for short.

OK or NG

OK	▶	GO TO 4.
NG	▶	Repair harness or connector.

4	CHECK POWER SUPPLY FOR A/C RELAY

Disconnect A/C relay.
Do approx. 12 volts exist between A/C relay harness terminal Nos. 1, 5 and body ground?

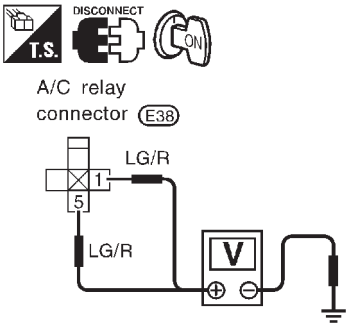

RHA062H

Yes or No

Yes	▶	GO TO 5.
No	▶	Check power supply circuit and 10A (No. 6) fuse at fuse block. Refer to EL-14, "Wiring Diagram — POWER —".

5	CHECK A/C RELAY AFTER DISCONNECTING IT

Refer to HA-180.

OK or NG

OK	▶	Reconnect A/C relay. GO TO 6.
NG	▶	Replace A/C relay.

6	CHECK COIL SIDE CIRCUIT OF A/C RELAY

Do approx. 12 volts exist between ECM harness terminal No. 23 and body ground?

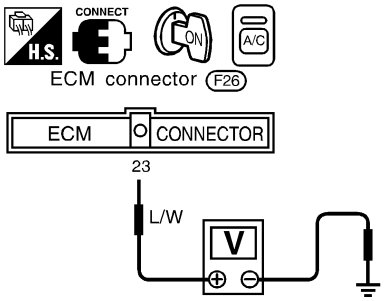

RHA534H

Yes or No

Yes	▶	GO TO 8.
No	▶	Disconnect A/C relay. Disconnect ECM harness connector. GO TO 7.

7	CHECK CIRCUIT CONTINUITY BETWEEN A/C RELAY AND ECM HARNESS

Check circuit continuity between A/C relay harness terminal No. 2 and ECM harness terminal No. 23.

Continuity should exist.

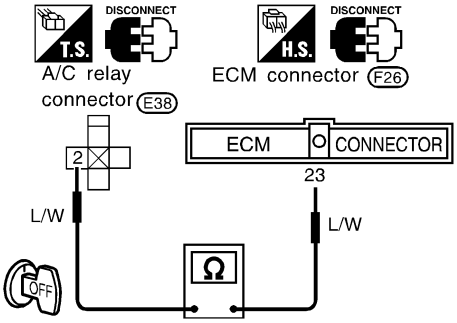

RHA535H

If OK, check harness for short.

OK or NG

OK	▶	Check ECM. Refer to EC-134, "ECM Terminals and Reference Value".
NG	▶	Repair harness or connector.

8	CHECK VOLTAGE FOR ECM

Do approx. 12 volts exist between ECM harness terminal No. 44 and body ground?

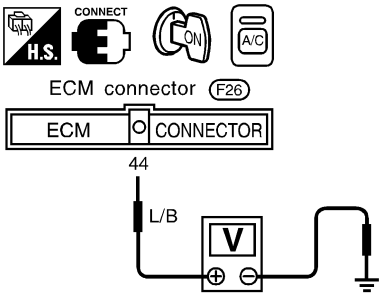

RHA536HD

Yes or No

Yes	▶	GO TO 9.
No	▶	Check ECM. Refer to EC-134, "ECM Terminals and Reference Value".

9	CHECK REFRIGERANT PRESSURE SENSOR

Refer to HA-181.

OK or NG

OK	▶	GO TO 10.
NG	▶	Replace refrigerant pressure sensor.

10	CHECK POWER SUPPLY FOR THERMO CONTROL AMP.

Do approx. 12 volts exist between thermo control amp. harness terminal No. 3 and body ground?

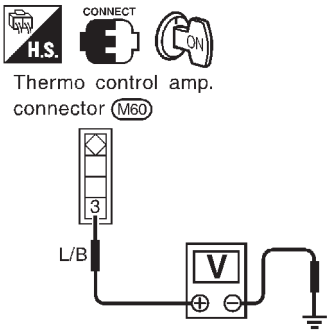

RHA131H

Yes or No

Yes	▶	GO TO 11.
No	▶	Repair harness or connector.

11	CHECK POWER SUPPLY FOR THERMO CONTROL AMP.

Do approx. 12 volts exist between thermo control amp. harness terminal No. 1 and body ground?

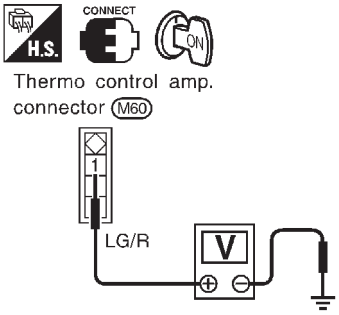

RHA132H

Yes or No

Yes	▶	GO TO 12.
No	▶	Check power supply circuit and 10A (No. 6) fuse at fuse block. Refer to EL-14, "Wiring Diagram — POWER —". ● If OK, check for open circuit in wiring harness. Repair or replace as necessary. ● If NG, replace fuse and check wiring harness for short circuit. Repair or replace as necessary.

12	CHECK THERMO CONTROL AMP. OPERATION

Reconnect thermo control amp. harness connector.
Does magnet clutch engage when short circuit between thermo control amp. harness terminal No. 2 and body ground?

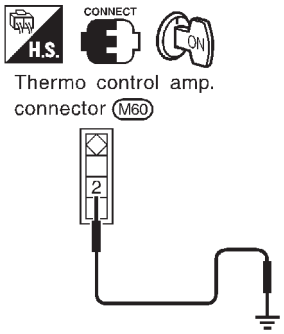

RHA133H

Yes or No

Yes	▶	GO TO 13.
No	▶	Repair thermo control amp.

13	CHECK CIRCUIT CONTINUITY BETWEEN THERMO CONTROL AMP. AND PUSH CONTROL UNIT

Reconnect push control unit harness connector.
Check circuit continuity between thermo control amp. harness terminal No. 2 and push control unit harness terminal No. 20.

Continuity should exist.

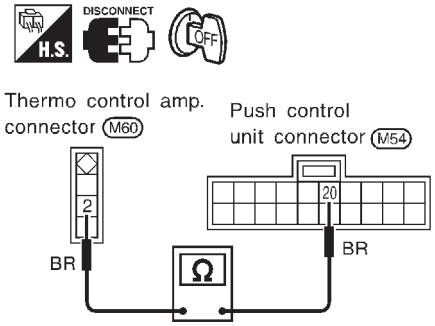

RHA134H

If OK, check harness for short.

OK or NG

OK	▶	GO TO 14.
NG	▶	Repair harness or connector.

14	CHECK FAN SWITCH

Reconnect fan switch harness connector.
Do approx. 12 volts exist between fan switch harness terminal No. 6 and body ground?

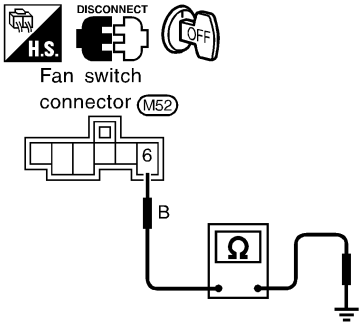

RHA588FA

Yes or No

Yes	▶	Replace fan switch.
No	▶	GO TO 15.

15	CHECK CIRCUIT CONTINUITY BETWEEN FAN SWITCH AND PUSH CONTROL UNIT

Reconnect push control unit harness connector.
Check circuit continuity between fan switch harness terminal No. 5 and push control unit harness terminal No. 19.
Continuity should exist.

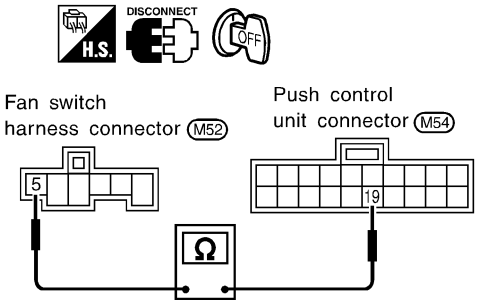

SHA367F

If OK, check harness for short.

OK or NG

OK	▶	Replace push control unit.
NG	▶	Repair harness or connector.

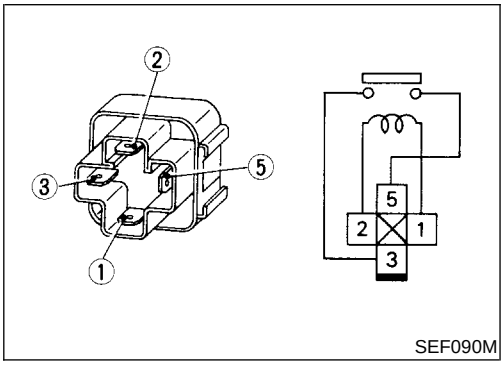

SEF090M

ELECTRICAL COMPONENT INSPECTION

NCHA0192

A/C Relay

NCHA0192S01

Check continuity between terminal Nos. 3 and 5.

Conditions	Continuity
12V direct current supply between terminal Nos. 1 and 2	Yes
No current supply	No

If NG, replace relay.

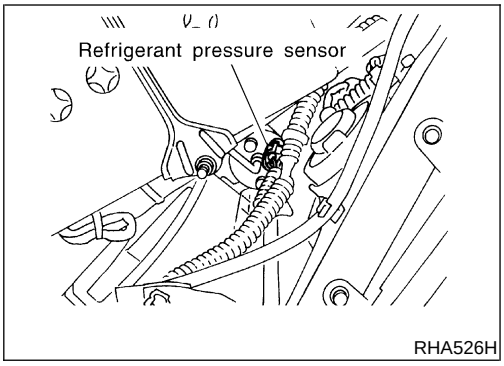

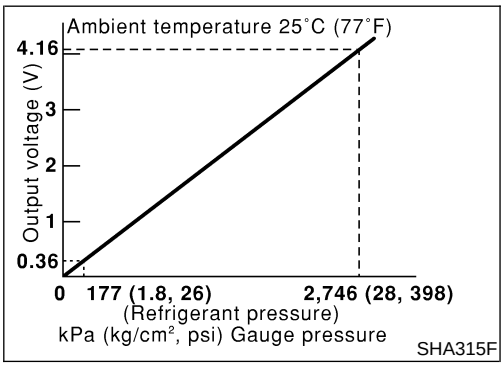

Refrigerant Pressure Sensor

NCHA0192S02

Make sure that higher A/C refrigerant pressure results in higher refrigerant-pressure sensor output voltage.
Refer to EC-621, "Diagnostic Procedure".

Insufficient Cooling

TROUBLE DIAGNOSIS PROCEDURE FOR INSUFFICIENT COOLING

=NCHA0148

SYMPTOM:

- **Insufficient Cooling.**

INSPECTION FLOW

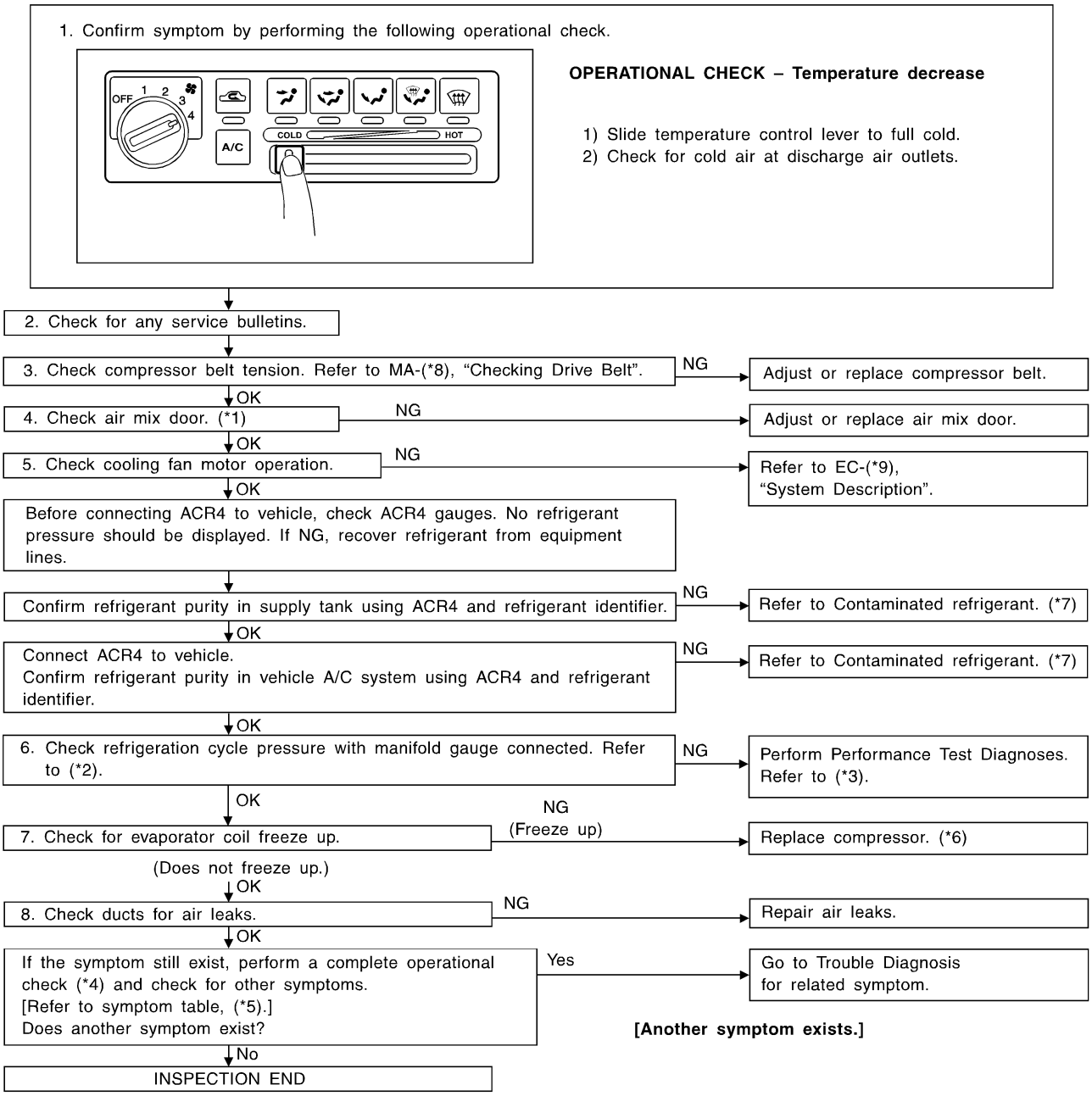

SHA360F

*1: HA-162	*4: HA-148	*7: HA-124
*2: HA-185	*5: HA-147	*8: MA-13
*3: HA-183	*6: HA-196	*9: EC-462

PERFORMANCE TEST DIAGNOSES

NCHA0149

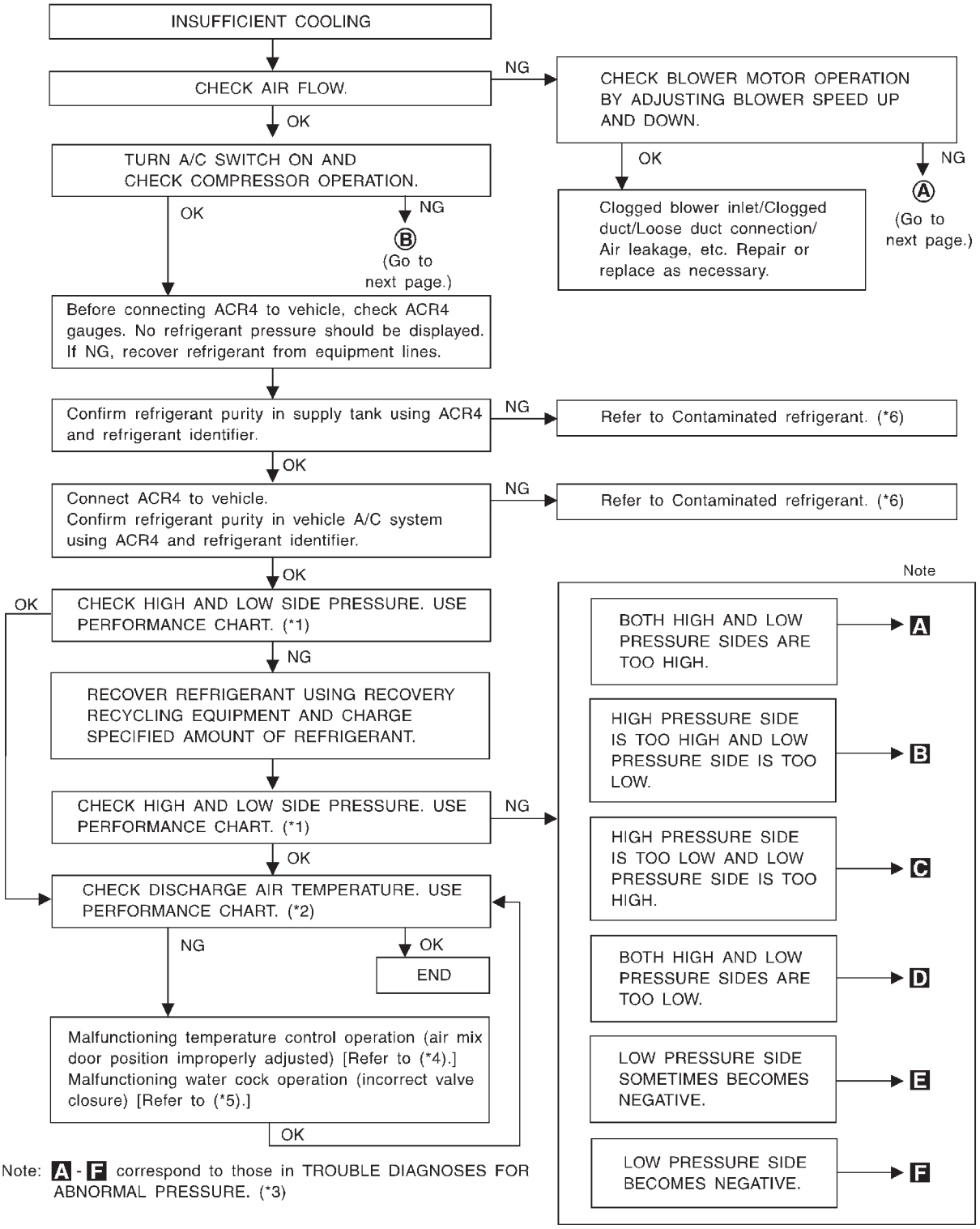

SHA194F

*1: HA-185
*2: HA-185
*3: HA-185
*4: HA-166
*5: HA-166
*6: HA-124

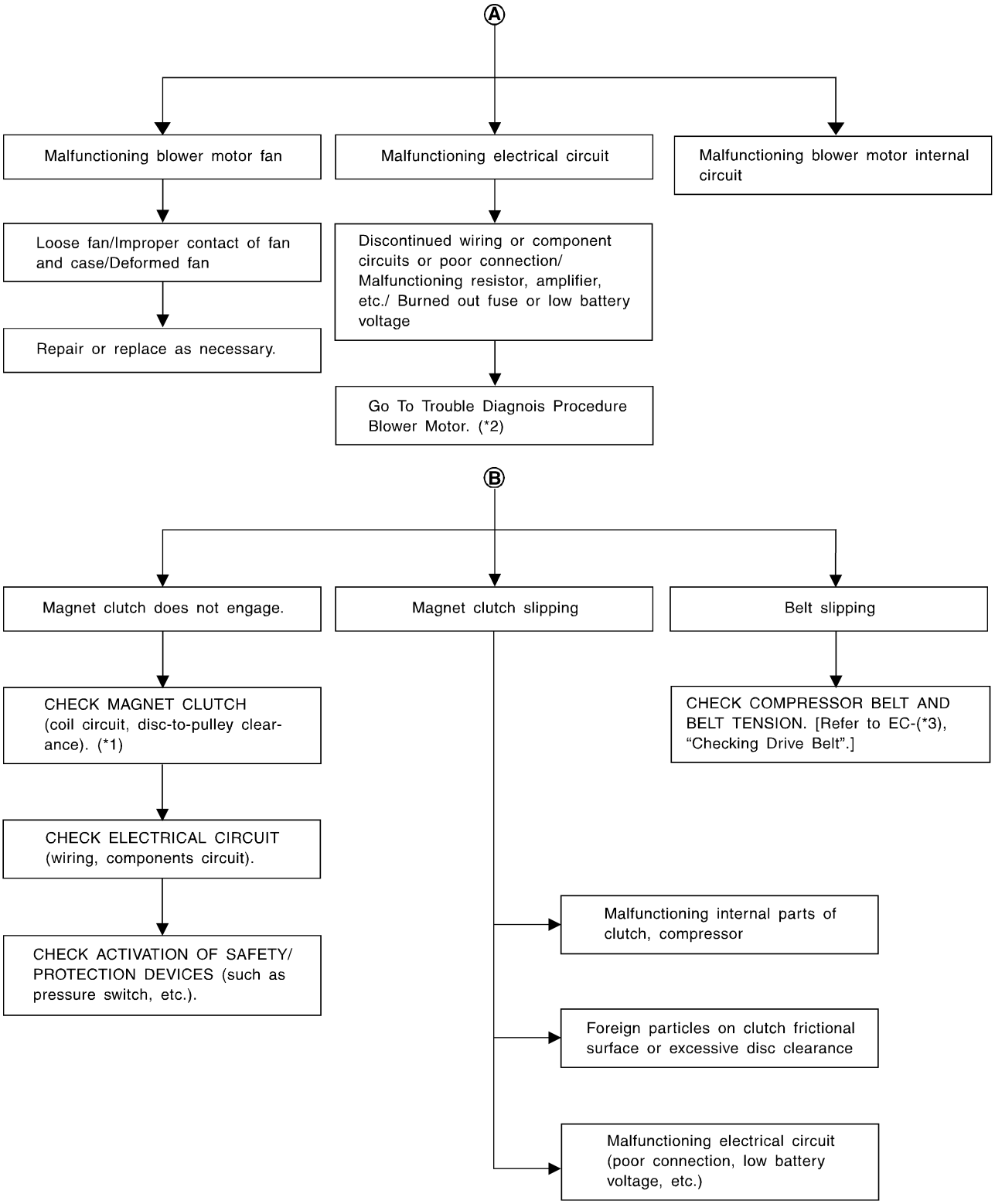

*1: HA-198 *2: HA-167 *3: MA-13

PERFORMANCE CHART

=NCHA0150

Test Condition

NCHA0150S01

Testing must be performed as follows:

Vehicle location: Indoors or in the shade (in a well-ventilated place)
Doors: Closed
Door window: Open
Hood: Open
TEMP.: Max. COLD
Discharge Air: Face Vent
REC switch: (Recirculation) set
FAN speed: High speed
Engine speed: Idle speed
Operate the air conditioning system for 10 minutes before taking measurements.

Test Reading

NCHA0150S02

Recirculating-to-discharge Air Temperature Table

NCHA0150S0201

Inside air (Recirculating air) at blower assembly inlet		Discharge air temperature at center ventilator °C (°F)
Relative humidity %	Air temperature °C (°F)	
50 - 60	25 (77)	10.9 - 12.9 (52 - 55)
	30 (86)	15.2 - 17.7 (59 - 64)
	35 (95)	19.4 - 22.5 (67 - 73)
60 - 70	25 (77)	12.9 - 15.0 (55 - 59)
	30 (86)	17.7 - 20.5 (64 - 69)
	35 (95)	22.5 - 25.2 (73 - 77)

Ambient Air Temperature-to-operating Pressure Table

NCHA0150S0202

Ambient air		High-pressure (Discharge side) kPa (kg/cm^2, psi)	Low-pressure (Suction side) kPa (kg/cm^2, psi)
Relative humidity %	Air temperature °C (°F)		
50 - 70	30 (86)	1,177 - 1,422 (12.0 - 14.5, 171 - 206)	216 - 255 (2.2 - 2.6, 31 - 37)
	35 (95)	1,344 - 1,648 (13.7 - 16.8, 195 - 239)	255 - 314 (2.6 - 3.2, 37 - 46)
	40 (104)	1,471 - 1,785 (15.0 - 18.2, 213 - 259)	304 - 382 (3.1 - 3.9, 44 - 55)

TROUBLE DIAGNOSES FOR ABNORMAL PRESSURE

NCHA0151

Whenever system's high and/or low side pressure is abnormal, diagnose using a manifold gauge. The marker above the gauge scale in the following tables indicates the standard (normal) pressure range. Since the standard (normal) pressure, however, differs from vehicle to vehicle, refer to HA-185 ("Ambient air temperature-to-operating pressure table").

Both High and Low-pressure Sides are Too High.

NCHA0151S01

Gauge indication	Refrigerant cycle	Probable cause	Corrective action
Both high and low-pressure sides are too high. A 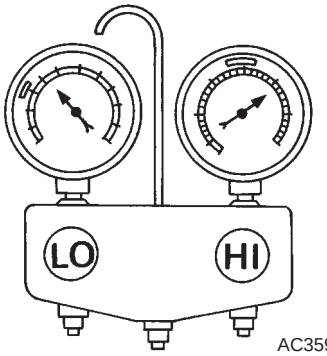 AC359A	● Pressure is reduced soon after water is splashed on condenser.	Excessive refrigerant charge in refrigeration cycle	Reduce refrigerant until specified pressure is obtained.
	Air suction by cooling fan is insufficient.	Insufficient condenser cooling performance ↓ 1. Condenser fins are clogged. 2. Improper fan rotation of cooling fan	● Clean condenser. ● Check and repair cooling fan as necessary.
	● Low-pressure pipe is not cold. ● When compressor is stopped high-pressure value quickly drops by approximately 196 kPa (2 kg/cm^2, 28 psi). It then decreases gradually thereafter.	Poor heat exchange in condenser (After compressor operation stops, high pressure decreases too slowly.) ↓ Air in refrigeration cycle	Evacuate repeatedly and recharge system.
	Engine tends to overheat.	Engine cooling systems malfunction.	Check and repair each engine cooling system.
	● An area of the low-pressure pipe is colder than areas near the evaporator outlet. ● Plates are sometimes covered with frost.	● Excessive liquid refrigerant on low-pressure side ● Excessive refrigerant discharge flow ● Expansion valve is open a little compared with the specification. ↓ 1. Improper thermal valve installation 2. Improper expansion valve adjustment	Replace expansion valve.

High-pressure Side is Too High and Low-pressure Side is Too Low.

NCHA0151S02

Gauge indication	Refrigerant cycle	Probable cause	Corrective action
High-pressure side is too high and low-pressure side is too low. B 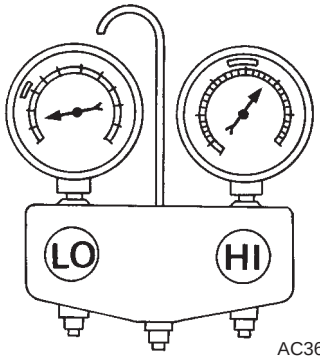 AC360A	Upper side of condenser and high-pressure side are hot, however, liquid tank is not so hot.	High-pressure tube or parts located between compressor and condenser are clogged or crushed.	● Check and repair or replace malfunctioning parts. ● Check lubricant for contamination.

High-pressure Side is Too Low and Low-pressure Side is Too High.

NCHA0151S03

Gauge indication	Refrigerant cycle	Probable cause	Corrective action
High-pressure side is too low and low-pressure side is too high. **C** 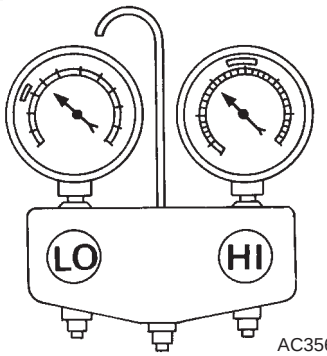 AC356A	High and low-pressure sides become equal soon after compressor operation stops.	Compressor pressure operation is improper. ↓ Damaged inside compressor packings	Replace compressor.
	No temperature difference between high and low-pressure sides	Compressor pressure operation is improper. ↓ Damaged inside compressor packings.	Replace compressor.

Both High- and Low-pressure Sides are Too Low.

NCHA0151S04

Gauge indication	Refrigerant cycle	Probable cause	Corrective action
Both high- and low-pressure sides are too low. **D** 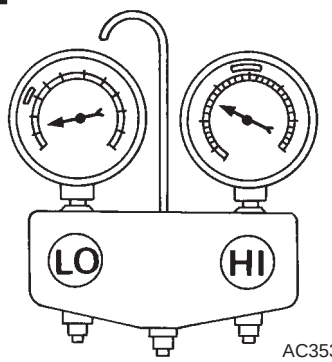 AC353A	• There is a big temperature difference between receiver drier outlet and inlet. Outlet temperature is extremely low. • Liquid tank inlet and expansion valve are frosted.	Liquid tank inside is slightly clogged.	• Replace liquid tank. • Check lubricant for contamination.
	• Temperature of expansion valve inlet is extremely low as compared with areas near liquid tank. • Expansion valve inlet may be frosted. • Temperature difference occurs somewhere in high-pressure side	High-pressure pipe located between receiver drier and expansion valve is clogged.	• Check and repair malfunctioning parts. • Check lubricant for contamination.
	• Expansion valve and liquid tank are warm or only cool when touched.	Low refrigerant charge ↓ Leaking fittings or components	Check refrigerant for leaks. Refer to "Checking for Refrigerant Leaks", HA-204.
	There is a big temperature difference between expansion valve inlet and outlet while the valve itself is frosted.	Expansion valve closes a little compared with the specification. ↓ 1. Improper expansion valve adjustment 2. Malfunctioning thermal valve 3. Outlet and inlet may be clogged.	• Remove foreign particles by using compressed air. • Check lubricant for contamination.
	An area of the low-pressure pipe is colder than areas near the evaporator outlet.	Low-pressure pipe is clogged or crushed.	• Check and repair malfunctioning parts. • Check lubricant for contamination.
	Air flow volume is not enough or is too low.	Evaporator is frozen.	• Check thermo control amp. operation. • Replace compressor.

Low-pressure Side Sometimes Becomes Negative.

NCHA0151S05

Gauge indication	Refrigerant cycle	Probable cause	Corrective action
Low-pressure side sometimes becomes negative. E 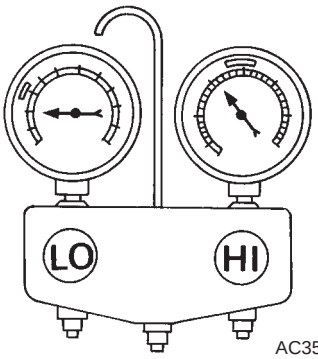 AC354A	• Air conditioning system does not function and does not cyclically cool the compartment air. • The system constantly functions for a certain period of time after compressor is stopped and restarted.	Refrigerant does not discharge cyclically. ↓ Moisture is frozen at expansion valve outlet and inlet. ↓ Water is mixed with refrigerant.	• Drain water from refrigerant or replace refrigerant. • Replace liquid tank.

Low-pressure Side Becomes Negative.

NCHA0151S06

Gauge indication	Refrigerant cycle	Probable cause	Corrective action
Low-pressure side becomes negative. F 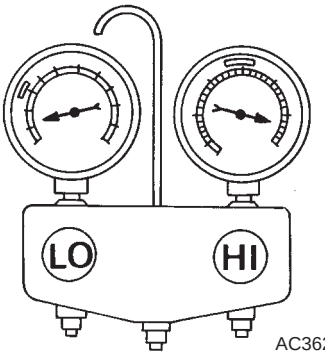 AC362A	Liquid tank or front/rear side of expansion valve's pipe is frosted or dewed.	High-pressure side is closed and refrigerant does not flow. ↓ Expansion valve or liquid tank is frosted.	Leave the system at rest until no frost is present. Start it again to check whether or not the problem is caused by water or foreign particles. • If water is the cause, initially cooling is okay. Then the water freezes causing a blockage. Drain water from refrigerant or replace refrigerant. • If due to foreign particles, remove expansion valve and remove particles with dry and compressed air (not shop air). • If either of the above methods cannot correct the problem, replace expansion valve. • Replace liquid tank. • Check lubricant for contamination.

Insufficient Heating

TROUBLE DIAGNOSIS PROCEDURE FOR INSUFFICIENT HEATING

=NCHA0152

SYMPTOM: Insufficient heating.

INSPECTION FLOW

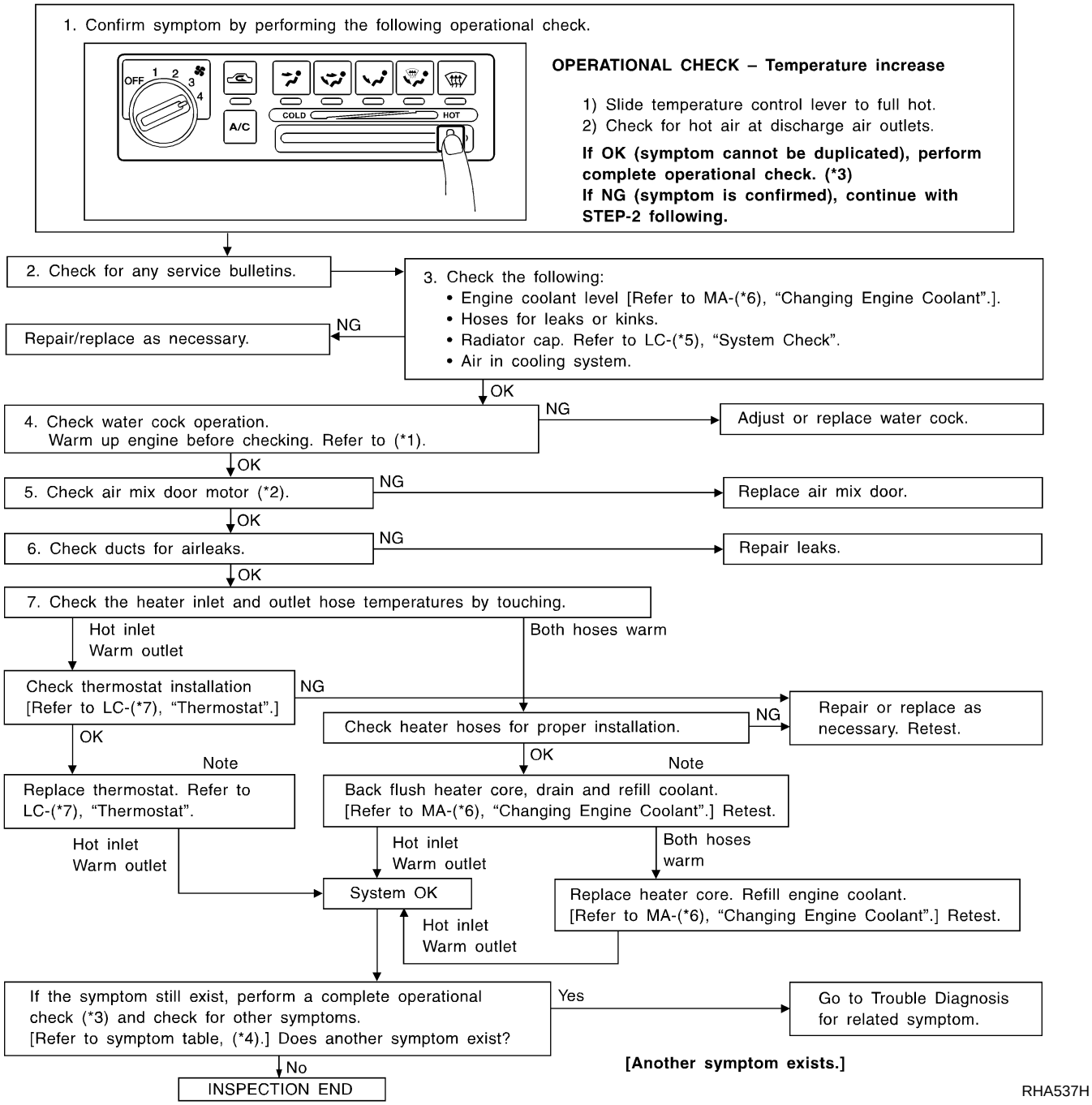

*1: HA-166
*2: HA-162
*3: HA-148
*4: HA-147
*5: LC-9
*6: MA-14
*7: LC-12

Noise

TROUBLE DIAGNOSIS PROCEDURE FOR NOISE

=NCHA0158

SYMPTOM:

- **Noise**

INSPECTION FLOW

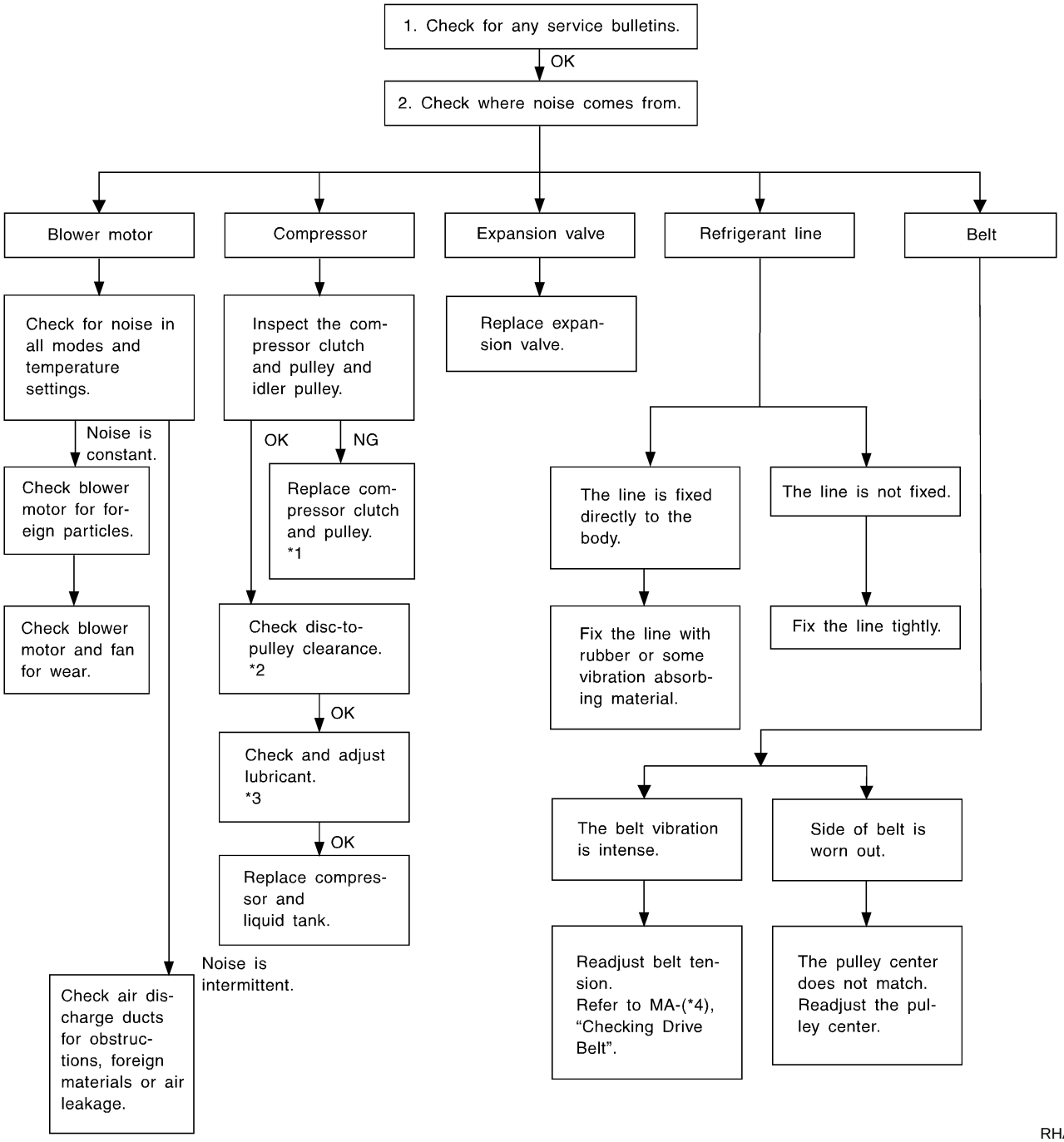

RHA538H

*1: HA-197
*2: HA-198
*3: HA-193
*4: MA-13

HFC-134a (R-134a) Service Procedure

NCHA0159

SETTING OF SERVICE TOOLS AND EQUIPMENT

NCHA0159S01

Discharging Refrigerant

NCHA0159S0101

WARNING:

Avoid breathing A/C refrigerant and lubricant vapor or mist. Exposure may irritate eyes, nose and throat. Remove HFC-134a (R-134a) from A/C system using certified service equipment meeting requirements of SAE J2210 (R-134a recycling equipment) or J2209 (R-134a recovery equipment). If accidental system discharge occurs, ventilate work area before resuming service. Additional health and safety information may be obtained from refrigerant and lubricant manufacturers.

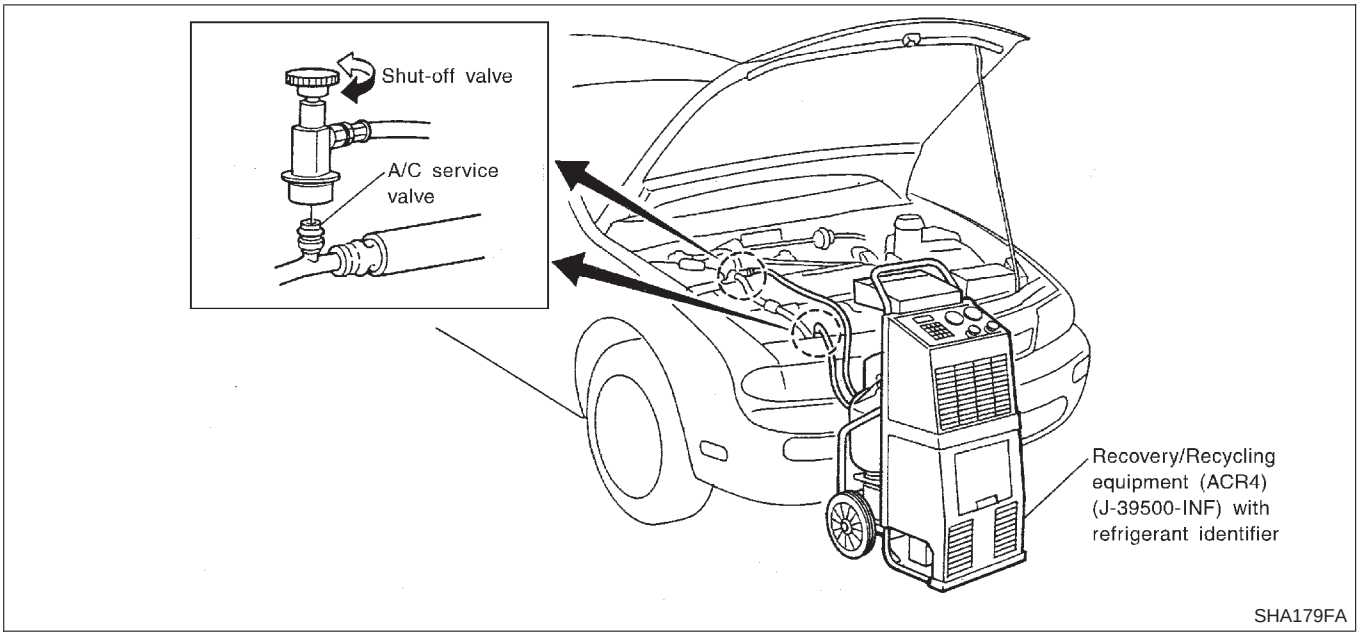

Evacuating System and Charging Refrigerant

NCHA0159S0102

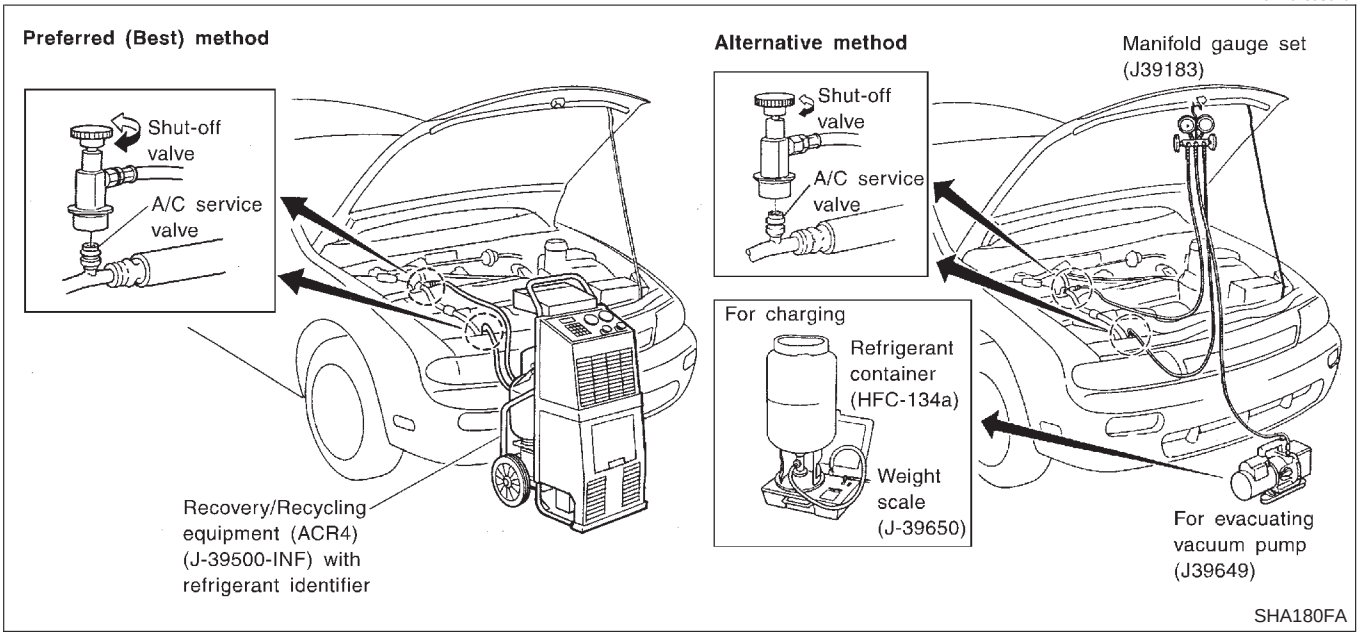

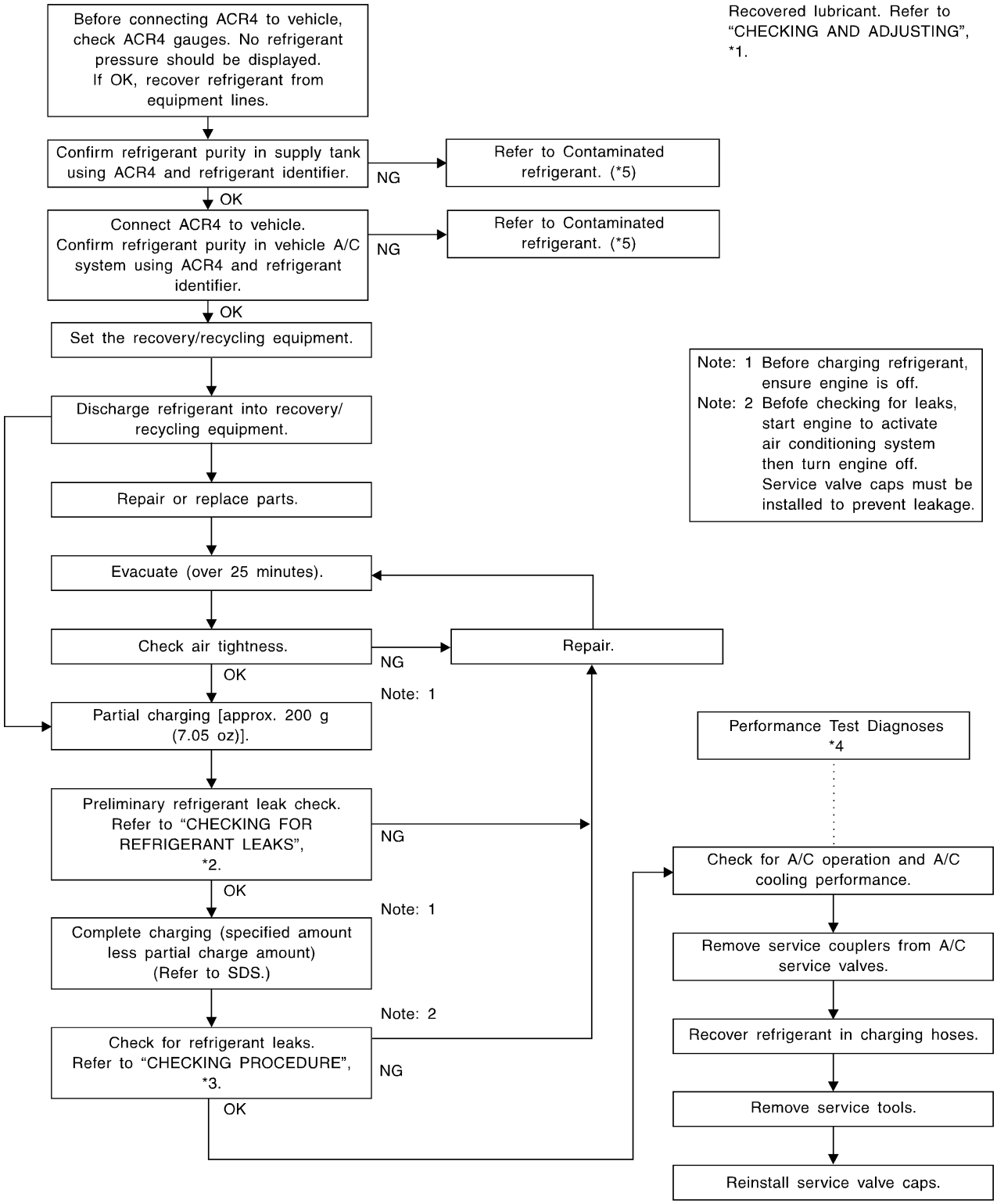

*1: HA-193
*2: HA-204
*3: HA-206
*4: HA-183
*5: HA-124

Maintenance of Lubricant Quantity in Compressor

NCHA0160

The lubricant in the compressor circulates through the system with the refrigerant. Add lubricant to compressor when replacing any component or after a large gas leakage occurred. It is important to maintain the specified amount.
If lubricant quantity is not maintained properly, the following malfunctions may result:

- Lack of lubricant: May lead to a seized compressor
- Excessive lubricant: Inadequate cooling (thermal exchange interference)

LUBRICANT

NCHA0160S01

Name: Nissan A/C System Oil Type R
Part number: KLH00-PAGR0

CHECKING AND ADJUSTING

NCHA0160S02

Adjust the lubricant quantity according to the test group shown below.

1	LUBRICANT RETURN OPERATION	
Can lubricant return operation be performed? ● A/C system works properly. ● There is no evidence of a large amount of lubricant leakage.		
	Yes or No	
Yes	▶	GO TO 2.
No	▶	GO TO 3.

2	PERFORM LUBRICANT RETURN OPERATION, PROCEEDING AS FOLLOWS	
1. Start engine, and set the following conditions: ● **Test condition** **Engine speed: Idling to 1,200 rpm** **A/C or AUTO switch: ON** **Blower speed: Max. position** **Temp. control: Optional [Set so that intake air temperature is 25 to 30°C (77 to 86°F).]** 2. Perform lubricant return operation for about 10 minutes. 3. Stop engine. **CAUTION:** **If excessive lubricant leakage is noted, do not perform the lubricant return operation.**		
	▶	GO TO 3.

3	CHECK COMPRESSOR	
Should the compressor be replaced?		
	Yes or No	
Yes	▶	GO TO HA-195.
No	▶	GO TO 4.

4	CHECK ANY PART	
Is there any part to be replaced? (Evaporator, condenser, liquid tank or in case there is evidence of a large amount of lubricant leakage.)		
	Yes or No	
Yes	▶	GO TO HA-195.
No	▶	Carry out the A/C performance test.

Lubricant Adjusting Procedure for Components Replacement Except Compressor

=NCHA0160S0201

After replacing any of the following major components, add the correct amount of lubricant to the system.

Amount of lubricant to be added

Part replaced	Lubricant to be added to system	Remarks
	Amount of lubricant mℓ (US fl oz, Imp fl oz)	
Evaporator	75 (2.5, 2.6)	—
Condenser	75 (2.5, 2.6)	—
Liquid tank	5 (0.2, 0.2)	Add if compressor is not replaced. *1
In case of refrigerant leak	30 (1.0, 1.1)	Large leak
	—	Small leak *2

*1: If compressor is replaced, addition of lubricant is included in the table.

*2: If refrigerant leak is small, no addition of lubricant is needed.

Lubricant Adjustment Procedure for Compressor Replacement

NCHA0160S0202

1. Before connecting ACR4 to vehicle, check ACR4 gauges. No refrigerant pressure should be displayed. If OK, recover refrigerant from equipment lines.
2. Confirm refrigerant purity in supply tank using ACR4 and refrigerant identifier. If NG, refer to "CONTAMINATED REFRIGERANT", HA-124.
3. Connect ACR4 to vehicle. Confirm refrigerant purity in vehicle A/C system using ACR4 and refrigerant identifier. If NG, refer to "CONTAMINATED REFRIGERANT", HA-124.
4. Discharge refrigerant into the refrigerant recovery/recycling equipment. Measure lubricant discharged into the recovery/recycling equipment.
5. Drain the lubricant from the "old" (removed) compressor into a graduated container and recover the amount of lubricant drained.
6. Drain the lubricant from the "new" compressor into a separate, clean container.
7. Measure an amount of new lubricant installed equal to amount drained from "old" compressor. Add this lubricant to "new" compressor through the suction port opening.
8. Measure an amount of new lubricant equal to the amount recovered during discharging. Add this lubricant to "new" compressor through the suction port opening.
9. If the liquid tank also needs to be replaced, add an additional 5 mℓ (0.2 US fl oz, 0.2 Imp fl oz) of lubricant at this time.
   Do not add this 5 mℓ (0.2 US fl oz, 0.2 Imp fl oz) of lubricant if only replacing the compressor.

Lubricant adjusting procedure for compressor replacement

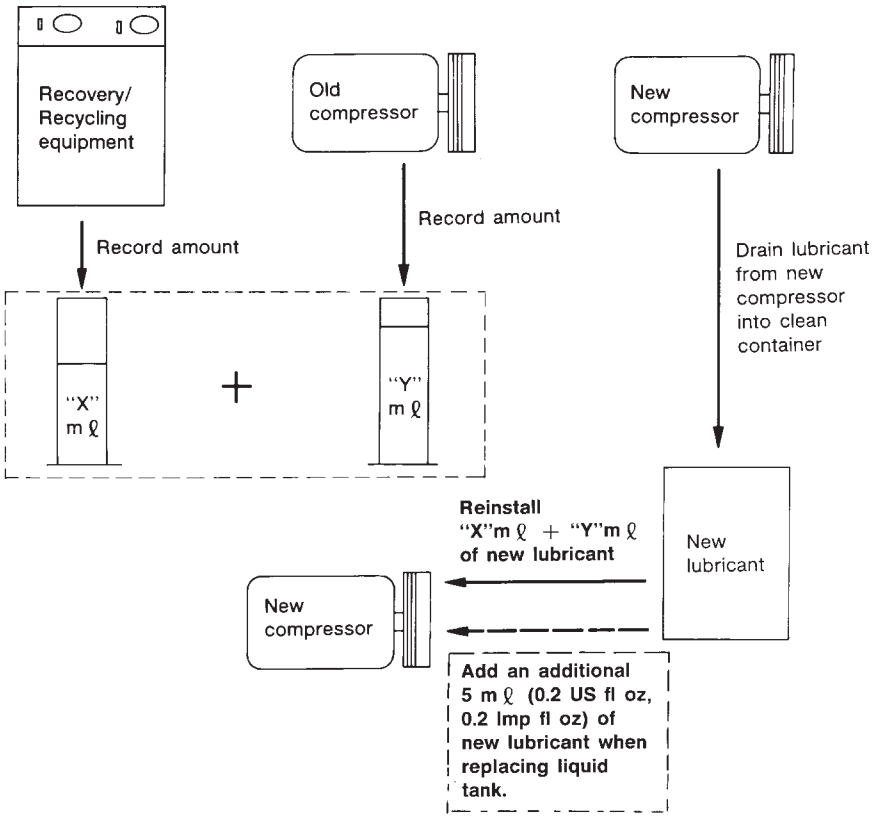

RHA065DD

Compressor

REMOVAL AND INSTALLATION

NCHA0161

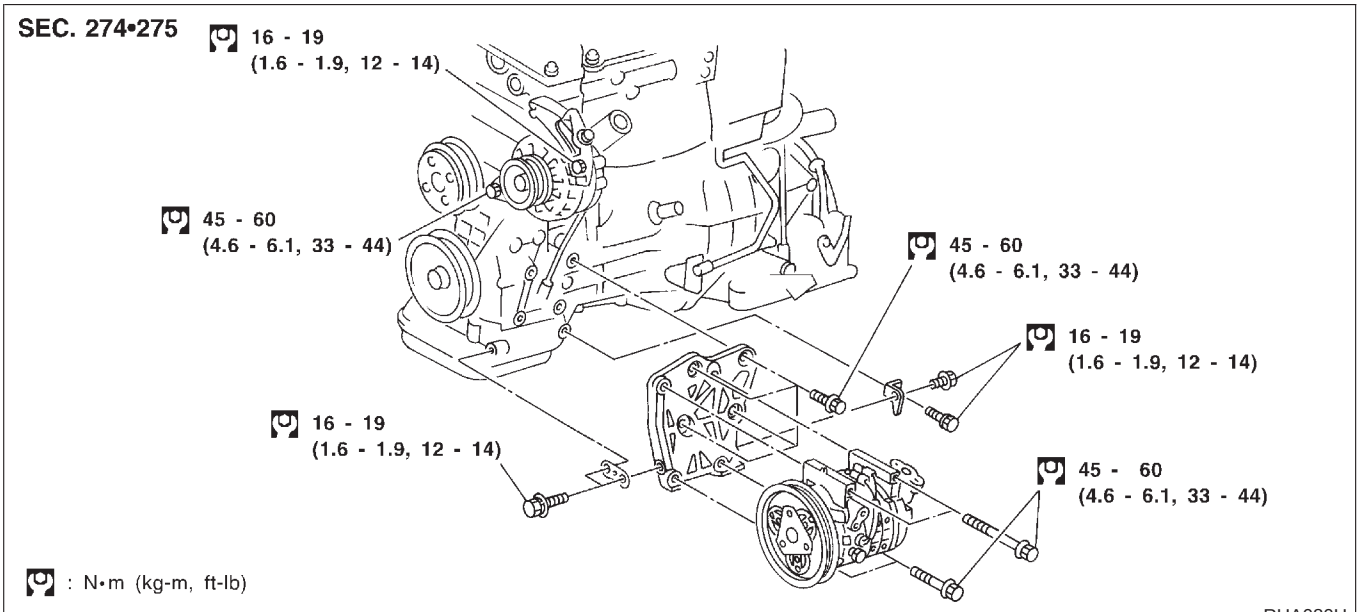

RHA080H

Compressor Clutch

OVERHAUL

NCHA0162

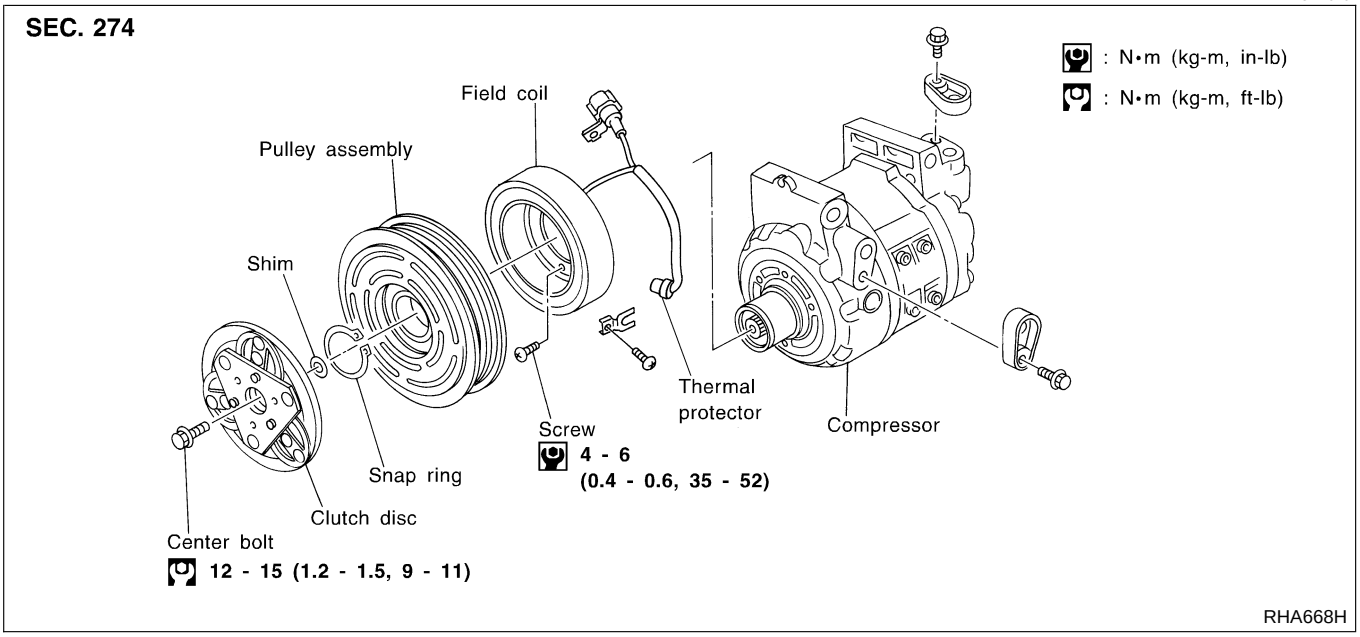

REMOVAL

NCHA0163

- When removing center bolt, hold clutch disc with clutch disc wrench.

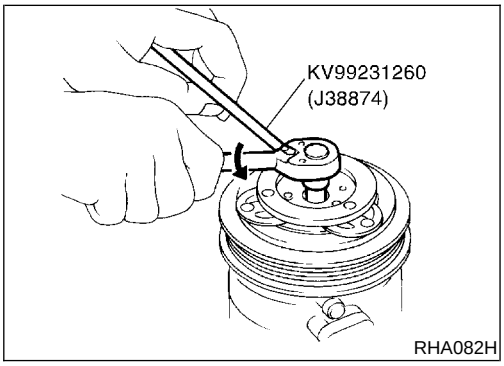

- Remove the drive plate using the clutch disc puller.
  Insert holder's three pins into the drive plate. Rotate the holder clockwise to hook it onto the plate. Tighten the center bolt to remove the drive plate.
  While tightening the center bolt, insert a screwdriver between two of the pins (as shown in the figure) to prevent rotation.
  After removing the drive plate, remove the shims from either the drive shaft or the drive plate.

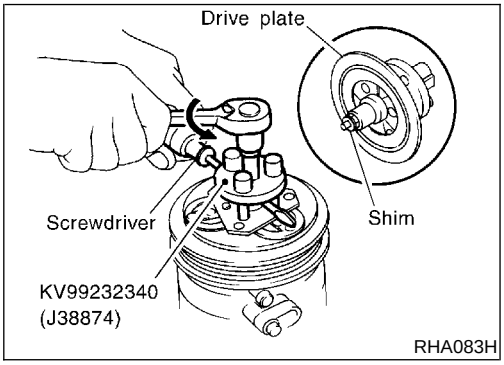

- Remove the snap ring using external snap ring pliers.

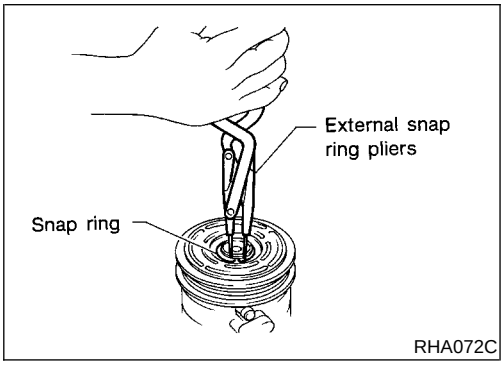

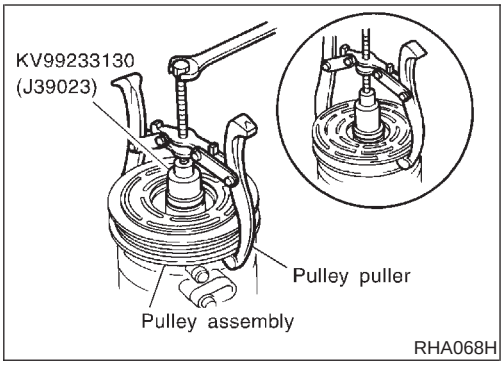

- Pulley removal:
  Use a commercially available pulley puller. Position the center of the puller on the end of the drive shaft. Remove the pulley assembly with the puller.
  For pressed pulleys:
  To prevent deformation of the pulley groove, the puller claws should be hooked under (not into) the pulley groove.
  For machine latched pulleys:
  Align the pulley puller groove with the pulley groove, and then remove the pulley assembly.
- Remove the snap ring using external snap ring pliers.
- Remove the field coil harness clip using a screwdriver. the three field coil fixing screws and remove the field coil.

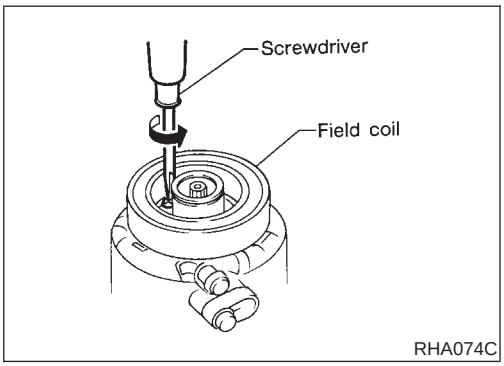

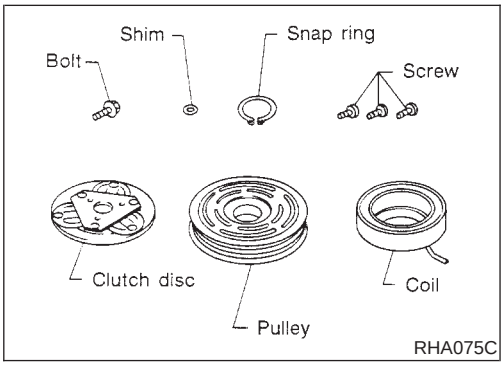

INSPECTION

NCHA0164

Clutch Disc

NCHA0164S01

If the contact surface shows signs of damage due to excessive heat, replace clutch disc and pulley.

Pulley

NCHA0164S02

Check the appearance of the pulley assembly. If contact surface of pulley shows signs of excessive grooving, replace clutch disc and pulley. The contact surfaces of the pulley assembly should be cleaned with a suitable solvent before reinstallation.

Coil

NCHA0164S03

Check coil for loose connection or cracked insulation.

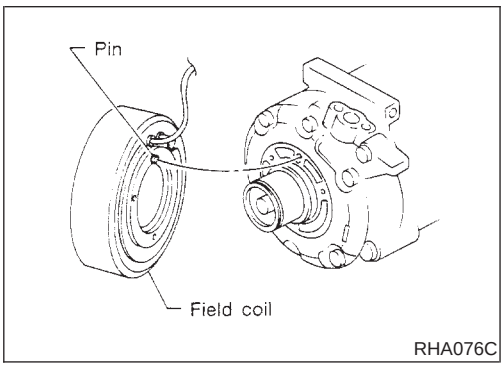

INSTALLATION

NCHA0165

- Install the field coil.
  Be sure to align the coil pin with the hole in the compressor front head.
- Install the field coil harness clip using a screwdriver.

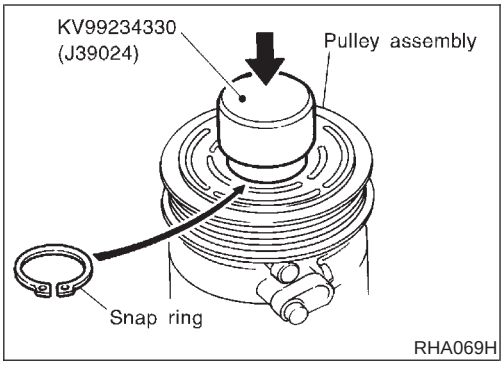

- Install the pulley assembly using the installer and a hand press, and then install the snap ring using snap ring pliers.

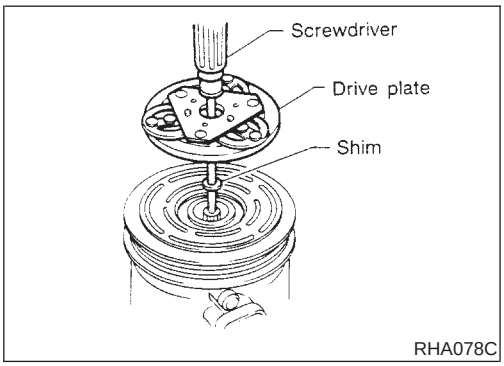

- Install the drive plate on the drive shaft, together with the original shim(s). Press the drive plate down by hand.

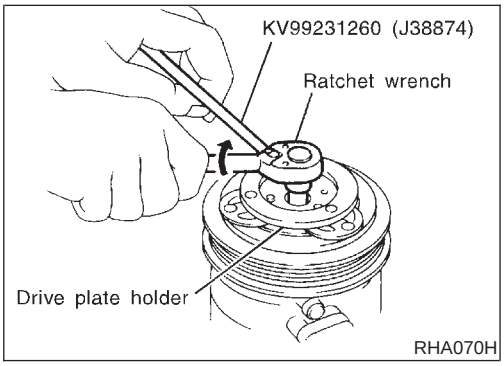

- Using the holder to prevent drive plate rotation, tighten the bolt to 12 to 15 N·m (1.2 to 1.5 kg-m, 9 to 11 ft-lb) torque.
- **After tightening the bolt, check that the pulley rotates smoothly.**

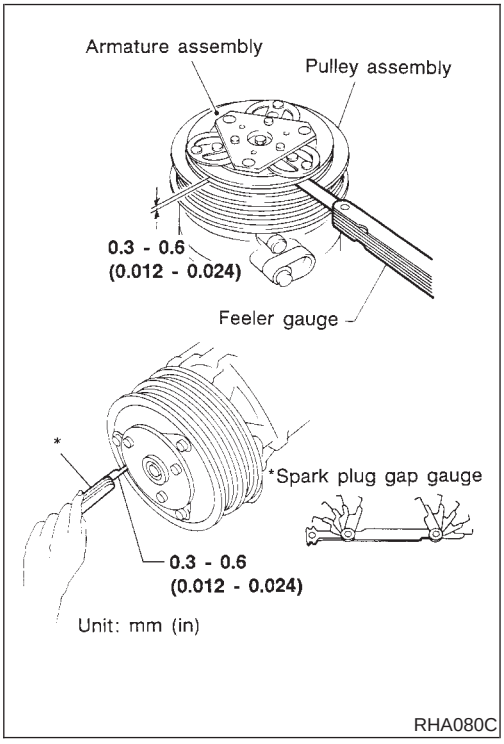

- Check clearance all the way around the clutch disc.

  Disc-to-pulley clearance:

  0.3 - 0.6 mm (0.012 - 0.024 in)

  If the specified clearance is not obtained, replace adjusting spacer and readjust.

Break-in Operation

NCHA0165S01

When replacing compressor clutch assembly, always conduct the break-in operation. This is done by engaging and disengaging the clutch about thirty times. Break-in operation raises the level of transmitted torque.

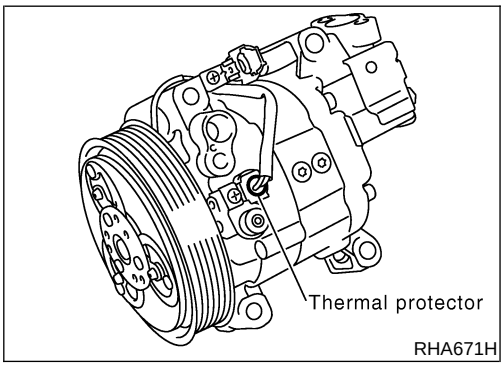

Thermal Protector

INSPECTION

NCHA0166

- When servicing, do not allow foreign matter to enter compressor.
- Check continuity between compressor harness terminal and field coil.

Heater Unit (Heater Core)

REMOVAL

NCHA0193

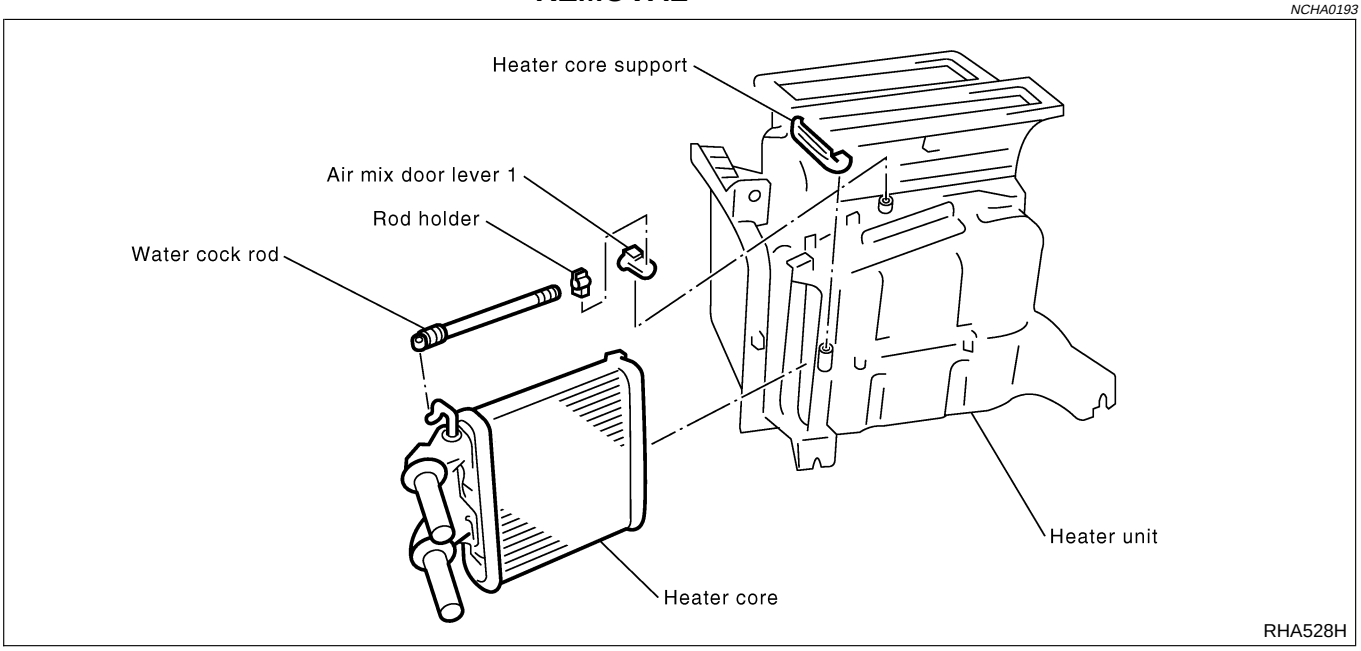

1. Drain the cooling system. Refer to MA-14, "Changing Engine Coolant".
2. Discharge the A/C system. Refer to HA-191.
3. Disconnect the two heater hoses from inside the engine compartment.
4. Remove the cooling unit. Refer to HA-202.
5. Remove the steering member assembly. Refer to BT-23, "Instrument Panel Assembly".
6. Remove the heater unit.
7. Remove the heater core.

INSTALLATION

NCHA0194

Install in the reverse order of removal.
When filling radiator with coolant, refer to MA-14, "Changing Engine Coolant".
Recharge the A/C system. Refer to HA-191.

Blower Unit

REMOVAL

NCHA0195

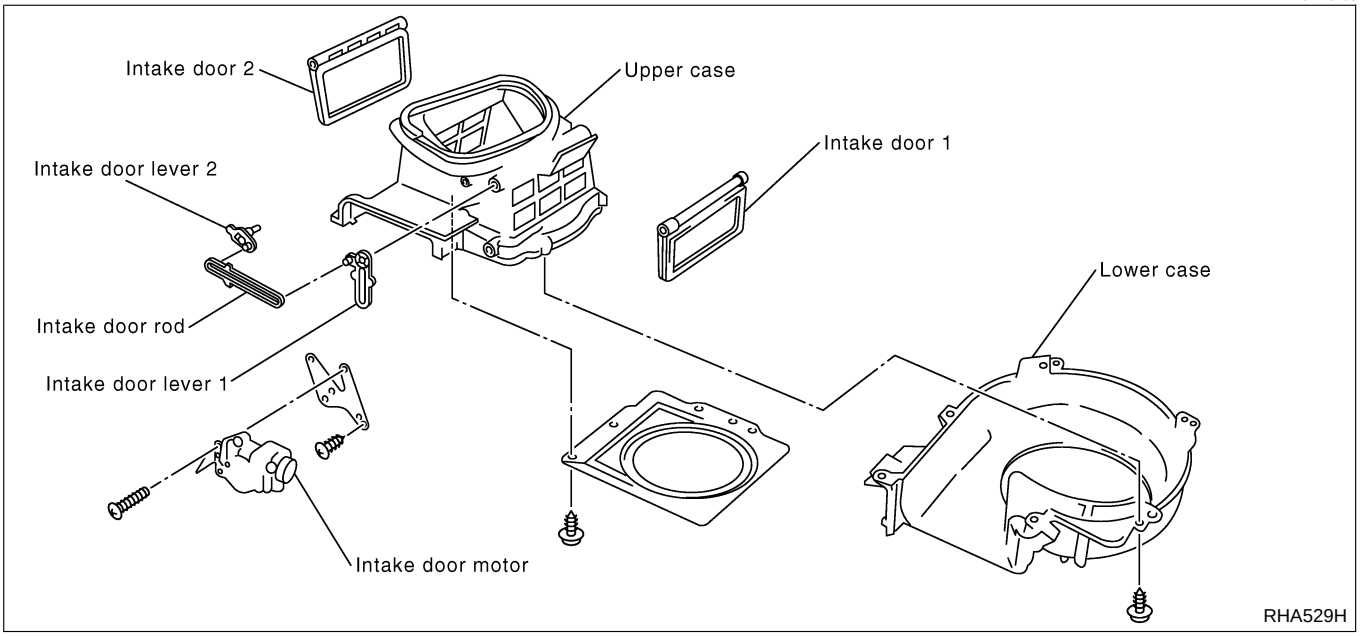

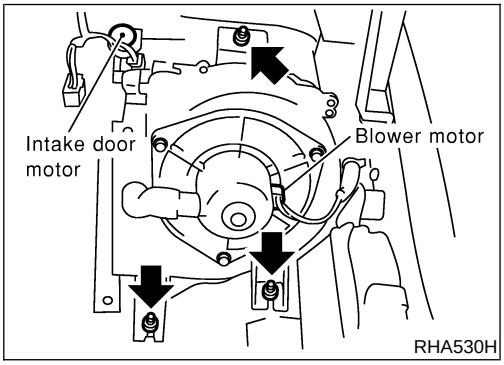

1. Discharge the A/C system. Refer to HA-191.
2. Disconnect the two refrigerant lines from the engine compartment.
   Cap the A/C lines to prevent moisture from entering the system.
3. Remove the glove box and mating trim. Refer to BT-23, "Instrument Panel Assembly".
4. Remove cooling unit. Refer to HA-202.
5. Disconnect the resistor and blower motor connector.
6. Remove blower unit.
7. Remove the three bolts and then remove the motor from the blower case.

INSTALLATION

NCHA0196

Install in the reverse order of removal.
Recharge the A/C system. Refer to HA-191.

Cooling Unit (A/C Evaporator)

REMOVAL

NCHA0197

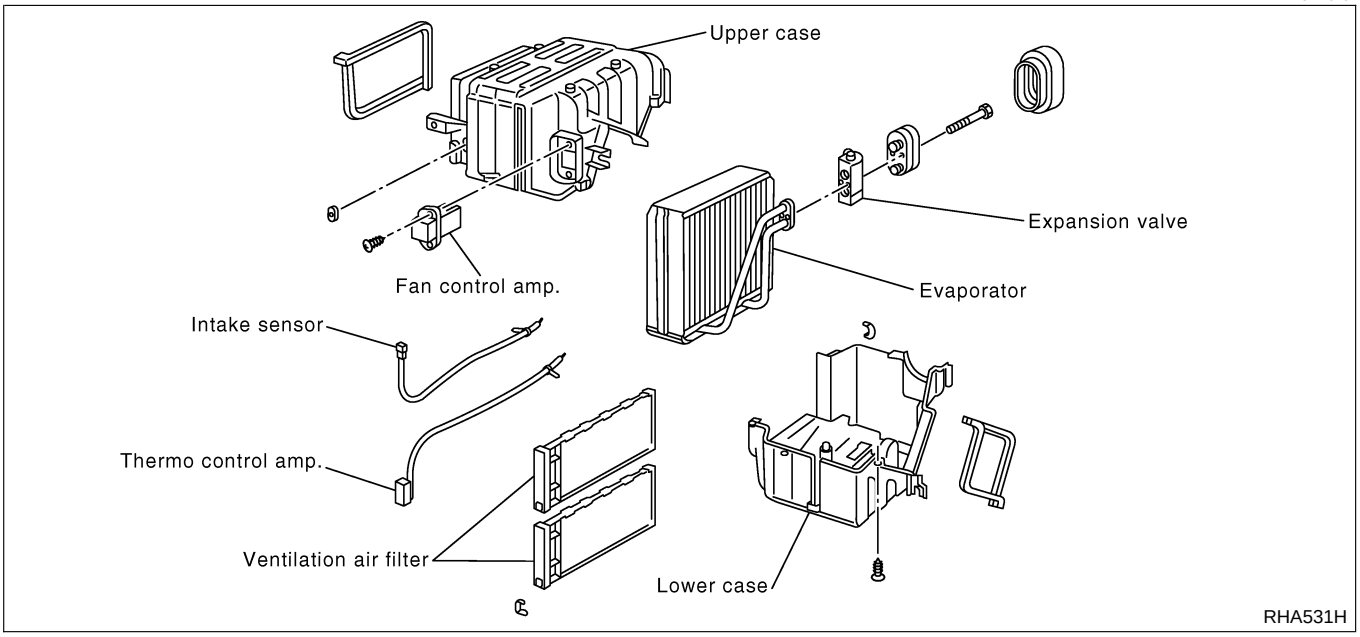

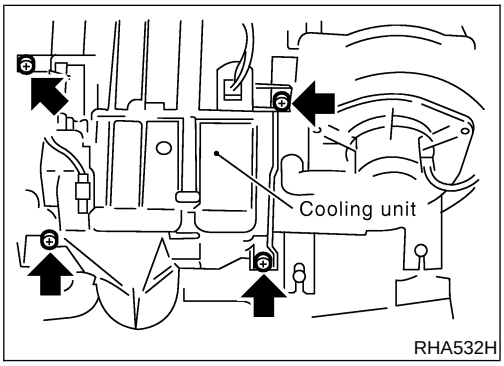

1. Discharge the A/C system. Refer to HA-191.
2. Disconnect the two refrigerant lines from the engine compartment.
   Cap the A/C lines to prevent moisture from entering the system.
3. Remove the glove box and mating trim. Refer to BT-23, “Instrument Panel Assembly”.
4. Disconnect the thermo control amp. connector.
5. Remove the cooling unit.
6. Separate the cooling unit case, and remove the evaporator.

INSTALLATION

NCHA0198

Installation is basically the reverse order of removal.
Recharge the A/C system. Refer to HA-191.

Refrigerant Lines

REMOVAL AND INSTALLATION

=NCHA0167

- Refer to page HA-126 reading “Precautions for Refrigerant Connection”.

SEC. 271•274•276

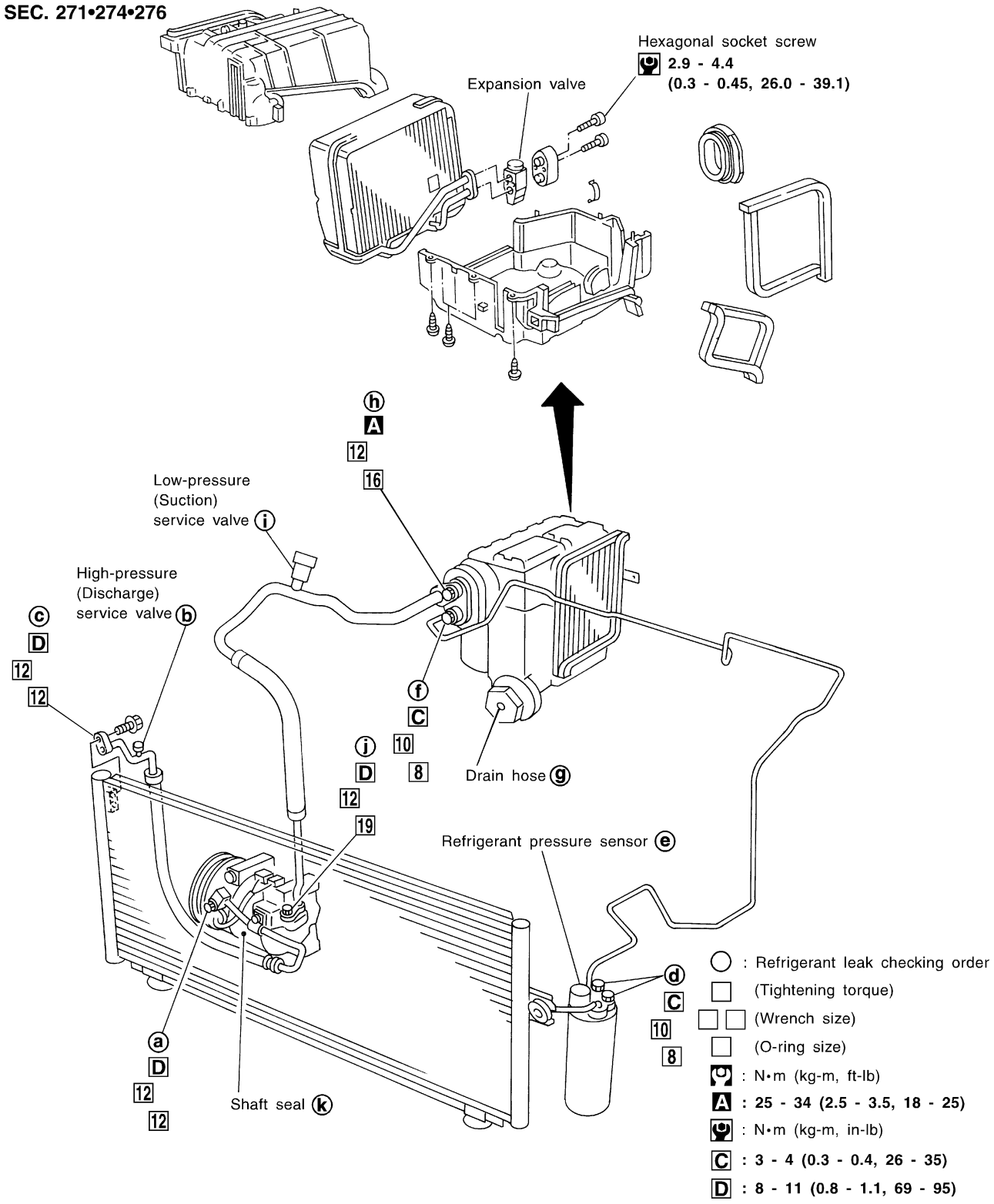

RHA533H

CHECKING FOR REFRIGERANT LEAKS

=NCHA0208

- Perform a visual inspection of all refrigeration parts, fittings, hoses and components for signs of A/C lubricant leakage, damage and corrosion. A/C lubricant leakage may indicate an area of refrigerant leakage. Allow extra inspection time in these areas when using either an electronic refrigerant leak detector or fluorescent dye leak detector.
- If dye is observed, confirm the leak with an electronic refrigerant leak detector. It is possible a prior leak was repaired and not properly cleaned.
- When searching for leaks, do not stop when one leak is found but continue to check for additional leaks at all system components and connections.
- When searching for refrigerant leaks using an electronic leak detector, move the probe along the suspected leak area at 1 to 2 inches per second and no further than 1/4 inch from the component.

NOTE:
Moving the electronic leak detector probe slower and closer to the suspected leak area will improve the chances of finding a leak.

CHECKING SYSTEM FOR LEAKS USING THE FLUORESCENT LEAK DETECTOR

NCHA0209

1. Check A/C system for leaks using the UV lamp and safety glasses (J-42220) in a low sunlight area (area without windows preferable). Illuminate all components, fittings and lines. The dye will appear as a bright green/yellow area at the point of leakage. Fluorescent dye observed at the evaporator drain opening indicates an evaporator core assembly (tubes, core or TXV) leak.
2. If the suspected area is difficult to see, use an adjustable mirror or wipe the area with a clean shop rag or cloth, then check the cloth with the UV lamp for dye residue.
3. After the leak is repaired, remove any residual dye using dye cleaner (J-43872) or prevent future misdiagnosis.
4. Perform a system performance check and verify the leak repair with an approved electronic refrigerant leak detector.

NOTE:

- **Other gases in the work area or substances on the A/C components, for example, anti-freeze, windshield washer fluid, solvents and lubricants, may falsely trigger the leak detector. Make sure the surfaces to be checked are clean. Clean with a dry cloth or blow off with shop air.**
- **Do not allow the sensor tip of the detector to contact with any substance. This can also cause false readings and may damage the detector.**

DYE INJECTION

NCHA0210

(This procedure is only necessary when re-charging the system or when the compressor has seized and was replaced.)

1. Check A/C system static (at rest) pressure. Pressure must be at least 345 kPa (3.5 kg/cm^2, 50 psi).
2. Pour one bottle (1/4 ounce/7.4 cc) of the A/C refrigerant dye into the injector tool (J-41459).
3. Connect the injector tool to the A/C LOW PRESSURE side sevice fitting.
4. Start engine and switch A/C ON.

5. With the A/C operating (compressor running), inject one bottle (1/4 ounce/7.4 cc) of fluorescent dye through the low-pressure service valve using dye injector tool J-41459 (refer to the manufacture's operating instructions).
6. With the engine still running, disconnect the injector tool from the service fitting.

CAUTION:
Be careful not to allow dye to spray or drip when disconnecting the injector from the system.

NOTE:
If repairing the A/C system or replacing a component, pour the dye directly into the open system connection and proceed with the service procedures.

7. Operate the A/C system for a minimum of 20 minutes to mix the dye with the system oil. Depending on the leak size, operating conditions and location of the leak, it may take from minutes to days for the dye to penetrate a leak and become visible.

ELECTRONIC REFRIGERANT LEAK DETECTOR

NCHA0211

Precautions for Handling Leak Detector

NCHA0211S01

When performing a refrigerant leak check, use a J-41995 A/C leak detector or equivalent. Ensure that the instrument is calibrated and set properly per the operating instructions.
The leak detector is a delicate device. In order to use the leak detector properly, read the operating instructions and perform any specified maintenance.

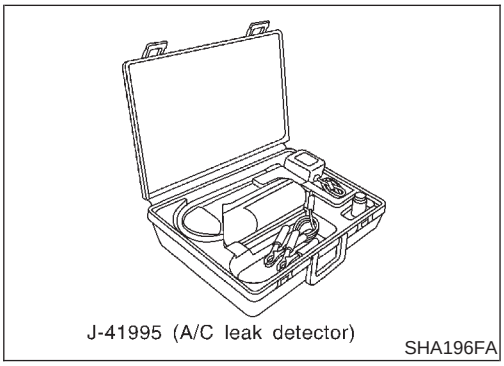
J-41995 (A/C leak detector)
SHA196FA

1. Position probe approximately 5 mm (3/16 in) away from point to be checked.

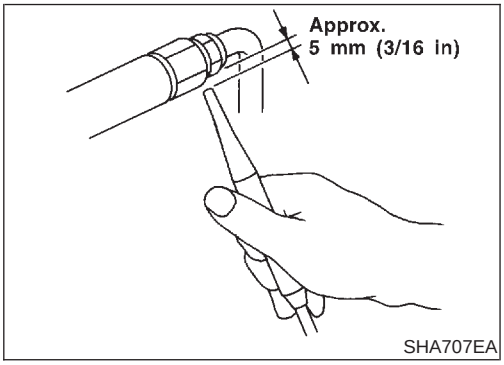

SHA707EA

2. When testing, circle each fitting completely with probe.

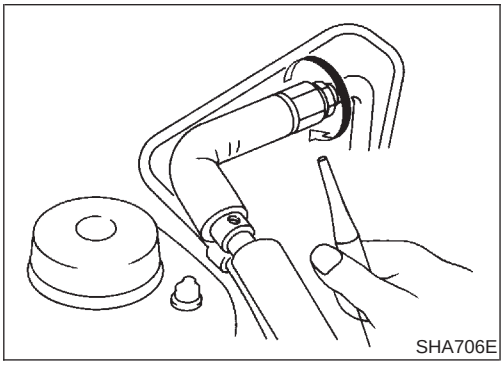
SHA706E

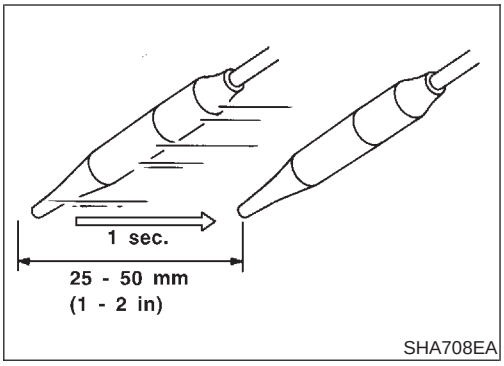

3. Move probe along component approximately 25 to 50 mm (1 to 2 in)/sec.

Checking Procedure

NCHA0211S02

To prevent inaccurate or false readings, make sure there is no refrigerant vapor, shop chemicals, or cigarette smoke in the vicinity of the vehicle. Perform the leak test in calm area (low air/wind movement) so that the leaking refrigerant is not dispersed.

1. Turn engine off.
2. Connect a suitable A/C manifold gauge set to the A/C service ports.
3. Check if the A/C refrigerant pressure is at least 345 kPa (3.52 kg/cm^2, 50 psi) above 16°C (61°F). If less than specification, recover/evacuate and recharge the system with the specified amount of refrigerant.

NOTE:
At temperatures below 16°C (61°F), leaks may not be detected since the system may not reach 345 kPa (3.52 kg/cm^2, 50 psi).

4. Conduct the leak test from the high side (compressor discharge **a** to evaporator inlet **f**) to the low side (evaporator drain hose **g** to shaft seal **k**). Refer to HA-203. Perform a leak check for the following areas carefully. Clean the component to be checked and move the leak detector probe completely around the connection/component.

- **Compressor**
  Check the fitting of high and low pressure hoses, relief valve and shaft seal.
- **Liquid tank**
  Check the pressure switch, tube fitting, weld seams and the fusible plug mount.
- **Service valves**
  Check all around the service valves. Ensure service valve caps are secured on the service valves (to prevent leaks).

NOTE:
After removing A/C manifold gauge set from service valves, wipe any residue from valves to prevent any false readings by leak detector.

- **Cooling unit (Evaporator)**
  With engine OFF, turn blower fan on "High" for at least 15 seconds to dissipate any refrigerant trace in the cooling unit. Wait a minimum of 10 minutes accumulation time (refer to the manufacturer's recommended procedure for actual wait time) before inserting the leak detector probe into the drain hose. Keep the probe inserted for at least ten seconds. Use caution not to contaminate the ptobe tip with water or dirt that may be in the drain hose.

5. If a leak detector detects a leak, verify at least once by blowing compressed air into area of suspected leak, then repeat check as outlined above.
6. Do not stop when one leak is found. Continue to check for additional leaks at all system components.
   If no leaks are found, perform steps 7 - 10.
7. Start engine.
8. Set the heater A/C control as follows:
1) A/C switch ON.
2) Face mode
3) Recirculation switch ON
4) Max cold temperature
5) Fan speed high
9. Run engine at 1,500 rpm for at least 2 minutes.
10. Turn engine off and perform leak check again following steps 4 through 6 above.

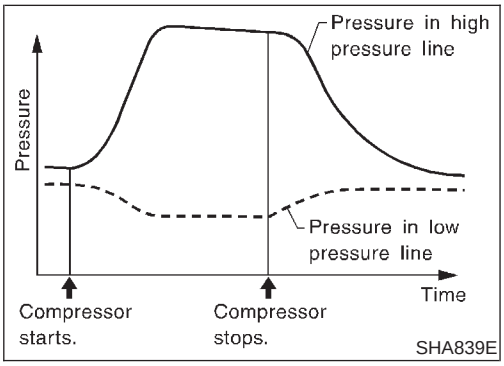

Refrigerant leaks should be checked immediately after stopping the engine. Begin with the leak detector at the compressor. The pressure on the high pressure side will gradually drop after refrigerant circulation stops and pressure on the low pressure side will gradually rise, as shown in the graph. Some leaks are more easily detected when pressure is high.

11. Before connecting ACR4 to vehicle, check ACR4 gauges. No refrigerant pressure should be displayed. If pressure is displayed, recover refrigerant from equipment lines and then check refrigerant purity.
12. Confirm refrigerant purity in supply tank using ACR4 and refrigerant identifier.
13. Confirm refrigerant purity in vehicle A/C system using ACR4 and refrigerant identifier.
14. Discharge A/C system using approved refrigerant recovery equipment. Repair the leaking fitting or component as necessary.
15. Evacuate and recharge A/C system and perform the leak test to confirm no refrigerant leaks.
16. Conduct A/C performance test to ensure system works properly.

Belt

TENSION ADJUSTMENT

NCHA0169

- **Refer to MA-13, “Checking Drive Belt”.**

Idle Air Control Valve (IACV) — Auxiliary Air Control (AAC) Valve

INSPECTION

NCHA0199

- **Refer to EC-436, “System Description” and HA-135.**

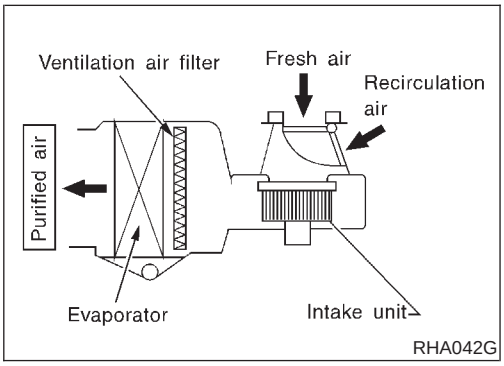

RHA042G

Ventilation Air Filter

FUNCTION

NCHA0171

Air inside passenger compartment is kept clean at either recirculation or fresh mode by installing ventilation air filter into cooling unit.

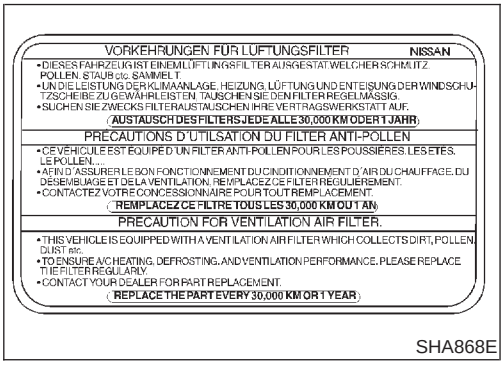
VORKEHRUNGEN FÜR LUFTUNGSFILTER NISSAN
• DIESES FAHRZEUG IST EINEM LÜFTUNGSFILTER AUSGESTATWELCHER SCHMUTZ, POLLEN, STAUB etc. SAMMELT.
• UN DIE LEISTUNG DER KLIMAANLAGE, HEIZUNG, LÜFTUNG UND ENTEISUNG DER WINDSCHUTZSCHEIBE ZU GEWÄHRLEISTEN, TAUSCHEN SIE DEN FILTER REGELMÄSSIG.
• SUCHEN SIE ZWECKS FILTERAUSTAUSCHEN IHRE VERTRAGSWERKSTATT AUF.
(AUSTAUSCH DES FILTERS JEDE ALLE 30,000 KM ODER 1 JAHR)
PRECAUTIONS D'UTILSATION DU FILTER ANTI-POLLEN
• CE VEHICULE EST EQUIPE D'UN FILTER ANTI-POLLEN POUR LES POUSSIERES, LES FETES, LE POLLEN,...
• AFIN D'ASSURER LE BON FONCTIONNEMENT DU CINDITIONNEMENT D'AIR DU CHAUFFAGE, DU DESEMBUAGE ET DE LA VENTILATION, REMPLACEZ CE FILTER REGULIEREMENT.
• CONTACTEZ VOTRE CONCESSIONNAIRE POUR TOUT REMPLACEMENT.
(REMPLACEZ CE FILTRE TOUS LES 30,000 KM OU 1 AN)
PRECAUTION FOR VENTILATION AIR FILTER.
• THIS VEHICLE IS EQUIPPED WITH A VENTILATION AIR FILTER WHICH COLLECTS DIRT, POLLEN, DUST etc.
• TO ENSURE A/C HEATING, DEFROSTING, AND VENTILATION PERFORMANCE, PLEASE REPLACE THE FILTER REGULARLY.
• CONTACT YOUR DEALER FOR PART REPLACEMENT.
(REPLACE THE PART EVERY 30,000 KM OR 1 YEAR)
SHA868E

REPLACEMENT TIMING

NCHA0172

Replace ventilation air filter.
Refer to MA-6, “PERIODIC MAINTENANCE”.
Caution label is fixed inside the glove box.

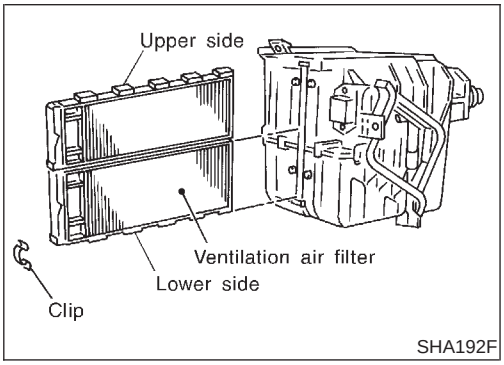

SHA192F

REPLACEMENT PROCEDURE

NCHA0173

- Remove glove box.
- Remove instrument reinforcement from instrument panel.
- Remove ventilation air filter fixed clip.
- Take out the lower side ventilation air filter from cooling unit.
- Then slide upper side filter to the bottom position and take off the ventilation air filter from the cooling unit.
- Replace with new one and reinstall on cooling unit.
- Reinstall instrument reinforcement, glove box and undercover.

Manual

COMPRESSOR

NCHA0174

Model	ZEXEL make DKV-14G
Type	Vane rotary
Displacement cm^3 (cu in)/rev.	140 (8.54)
Direction of rotation	Clockwise (viewed from drive end)
Drive belt	Poly V

LUBRICANT

NCHA0175

Model		ZEXEL make DKV-14G
Name		Nissan A/C System Oil Type R
Part number		KLH00-PAGR0
Capacity mℓ (US fl oz, Imp fl oz)	Total in system	180 (6.1, 6.3)
	Compressor (Service part) charging amount	180 (6.1, 6.3)

REFRIGERANT

NCHA0176

Type	HFC-134a (R-134a)
Capacity kg (lb)	0.55 - 0.65 (1.21 - 1.43)

ENGINE IDLING SPEED (WHEN A/C IS ON)

NCHA0177

- **Refer to EC-632, “Idle Speed and Ignition Timing”.**

BELT TENSION

NCHA0178

- **Refer to MA-13, “Checking Drive Belts”.**

NOTES