# HEATER & AIR CONDITIONER

# SECTION HA



## CONTENTS

# CONTENTS (Cont'd)

**When you read wiring diagrams:**
- **Read GI section, "HOW TO READ WIRING DIAGRAMS".**
- **See EL section, "POWER SUPPLY ROUTING" for power distribution circuit.**

**When you perform trouble diagnoses, read GI section, "HOW TO FOLLOW FLOW CHART IN TROUBLE DIAGNOSES" and "HOW TO PERFORM EFFICIENT DIAGNOSIS FOR AN ELECTRICAL INCIDENT".**

## Supplemental Restraint System (SRS) "AIR BAG" and "SEAT BELT PRE-TENSIONER"

The Supplemental Restraint System such as "AIR BAG" and "SEAT BELT PRE-TENSIONER" used along with a seat belt, helps to reduce the risk or severity of injury to the driver and front passenger for certain types of collision. The SRS system composition which is available to INFINITI Q45 is as follows:

- For a frontal collision
  The Supplemental Restraint System consists of driver air bag module (located in the center of the steering wheel), front passenger air bag module (located on the instrument panel on passenger side), seat belt pre-tensioners, a diagnosis sensor unit, warning lamp, wiring harness and spiral cable.
- For a side collision
  The Supplemental Restraint System consists of front side air bag module (located in the outer side of front seat), satellite sensor, diagnosis sensor unit (one of components of air bags for a frontal collision), wiring harness, warning lamp (one of components of air bags for a frontal collision).

Information necessary to service the system safely is included in the **RS section** of this Service Manual.

**WARNING:**

- **To avoid rendering the SRS inoperative, which could increase the risk of personal injury or death in the event of a collision which would result in air bag inflation, all maintenance should be performed by an authorized INFINITI dealer.**
- **Improper maintenance, including incorrect removal and installation of the SRS, can lead to personal injury caused by unintentional activation of the system. For removal of Spiral Cable and Air Bag Module, see the RS section.**
- **Do not use electrical test equipment on any circuit related to the SRS unless instructed to in this Service Manual. Spiral cable and wiring harnesses (except satellite sensor and side air bag module) covered with yellow insulation tape either just before the harness connectors or for the complete harness are related to the SRS.**

## Precautions for Working with HFC-134a (R-134a)

**WARNING:**

- **CFC-12 (R-12) refrigerant and HFC-134a (R-134a) refrigerant are not compatible. If the refrigerants are mixed, compressor malfunction is likely to occur, refer to "Contaminated refrigerant" below. To determine the purity of HFC-134a (R-134a) in the vehicle and recovery tank, use Refrigerant Recovery/Recycling Recharging equipment (ACR4) (J-39500-INF) and Refrigerant Identifier.**
- **Use only specified lubricant for the HFC-134a (R-134a) A/C system and HFC-134a (R-134a) components. If lubricant other than that specified is used, compressor failure is likely to occur.**
- **The specified HFC-134a (R-134a) lubricant rapidly absorbs moisture from the atmosphere. The following handling precautions must be observed:**
  - **a: When removing refrigerant components from a vehicle, immediately cap (seal) the component to minimize the entry of moisture from the atmosphere.**
  - **b: When installing refrigerant components to a vehicle, do not remove the caps (unseal) until just before connecting the components. Connect all refrigerant loop components as quickly as possible to minimize the entry of moisture into system.**
  - **c: Only use the specified lubricant from a sealed container. Immediately reseal containers of lubricant. Without proper sealing, lubricant will become moisture saturated and should not be used.**
  - **d: Avoid breathing A/C refrigerant and lubricant vapor or mist. Exposure may irritate eyes, nose and throat. Remove R-134a from the A/C system, using certified service equipment meeting requirements of SAE J2210 (R-134a recycling equipment), or J2209 (R-134a recovery equipment). If accidental system discharge occurs, ventilate work area before resuming service. Additional health and safety information may be obtained from refrigerant and lubricant manufacturers.**
  - **e: Do not allow lubricant (Nissan A/C System Oil Type S) to come in contact with styrofoam parts. Damage may result.**

## Precautions for Working with HFC-134a (R-134a) (Cont'd)

**Contaminated refrigerant**

**If a refrigerant other than pure R-134a is identified in a vehicle, your options are:**

- **Explain to the customer that environmental regulations prohibit the release of contaminated refrigerant into the atmosphere.**
- **Explain that recovery of the contaminated refrigerant could damage your service equipment and refrigerant supply.**
- **Suggest the customer return the vehicle to the location of previous service where the contamination may have occurred.**
- **If you choose to perform the repair, recover the refrigerant using only dedicated equipment and containers. Do not recover contaminated refrigerant into your existing service equipment. If your facility does not have dedicated recovery equipment, you may contact a local refrigerant product retailer for available service. This refrigerant must be disposed of in accordance with all federal and local regulations. In addition, replacement of all refrigerant system components on the vehicle is recommended.**
- **If the vehicle is within the warranty period, the air conditioner warranty is void. Please contact INFINITI Customer Affairs for further assistance.**

## General Refrigerant Precautions

**WARNING:**

- **Do not release refrigerant into the air. Use approved recovery/recycling equipment to capture the refrigerant every time an air conditioning system is discharged.**
- **Always wear eye and hand protection (goggles and gloves) when working with any refrigerant or air conditioning system.**
- **Do not store or heat refrigerant containers above 52°C (125°F).**
- **Do not heat a refrigerant container with an open flame; if container warming is required, place the bottom of the container in a warm pail of water.**
- **Do not intentionally drop, puncture, or incinerate refrigerant containers.**
- **Keep refrigerant away from open flames: poisonous gas will be produced if refrigerant burns.**
- **Refrigerant will displace oxygen, therefore be certain to work in well ventilated areas to prevent suffocation.**
- **Do not pressure test or leak test HFC-134a (R-134a) service equipment and/or vehicle air conditioning systems with compressed air during repair. Some mixtures of air and R-134a have been shown to be combustible at elevated pressures. These mixtures, if ignited, may cause injury or property damage. Additional health and safety information may be obtained from refrigerant manufacturers.**

## Precautions for Leak Detection Dye

- The A/C system contains a fluorescent leak detection dye used for locating refrigerant leaks. An ultraviolet (UV) lamp is required to illuminate the dye when inspecting for leaks.
- Always wear fluorescence enhancing UV safety glasses to protect your eyes and enhance the visibility of the fluorescent dye.
- A compressor shaft seal should not be repaired because of dye seepage. The compressor shaft seal should only be repaired after confirming the leak with an electronic refrigerant leak detector (J-41995).
- Always remove any dye from the leak area after repairs are complete to avoid a misdiagnosis during a future service.
- Do not allow dye to come into contact with painted body panels or interior components. If dye is spilled, clean immediately with the approved dye cleaner. Fluorescent dye left on a surface for an extended period of time **cannot be removed.**
- Do not spray the fluorescent dye cleaning agent on hot surfaces (engine exhaust manifold, etc.).
- Do not use more than one refrigerant dye bottle (1/4 ounce / 7.4 cc) per A/C system.
- Leak detection dyes for R-134a and R12 A/C systems are different. Do not use R-134a leak detection dye in R-12 A/C system or R-12 leak detection dye in R-134a A/C systems or A/C system damage may result.
- The fluorescent properties of the dye will remain for over three (3) years unless a compressor failure occurs.

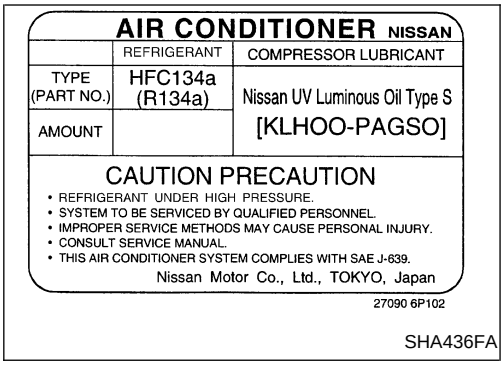


## A/C Identification Label

Vehicles with factory installed fluorescent dye have this identification label on the under side of hood.

**NOTE:**

Vehicles with factory installed fluorescent dye have a green label. Vehicles without factory installed fluorescent dye have a blue label.

## Precautions for Refrigerant Connection

A new type refrigerant connection has been introduced to all refrigerant lines except the following location.

- Expansion valve to cooling unit
- Condenser to liquid tank

### FEATURES OF NEW TYPE REFRIGERANT CONNECTION

- The O-ring is relocated in a groove for proper installation. This eliminates the chance of the O-ring being caught in, or damaged by, the mating part. The sealing direction of the O-ring is now set vertically in relation to the contacting surface of the mating part to improve sealing characteristics.
- The reaction force of the O-ring will not occur in the direction that causes the joint to pull out, thereby facilitating piping connections.

## Precautions for Refrigerant Connection (Cont'd)

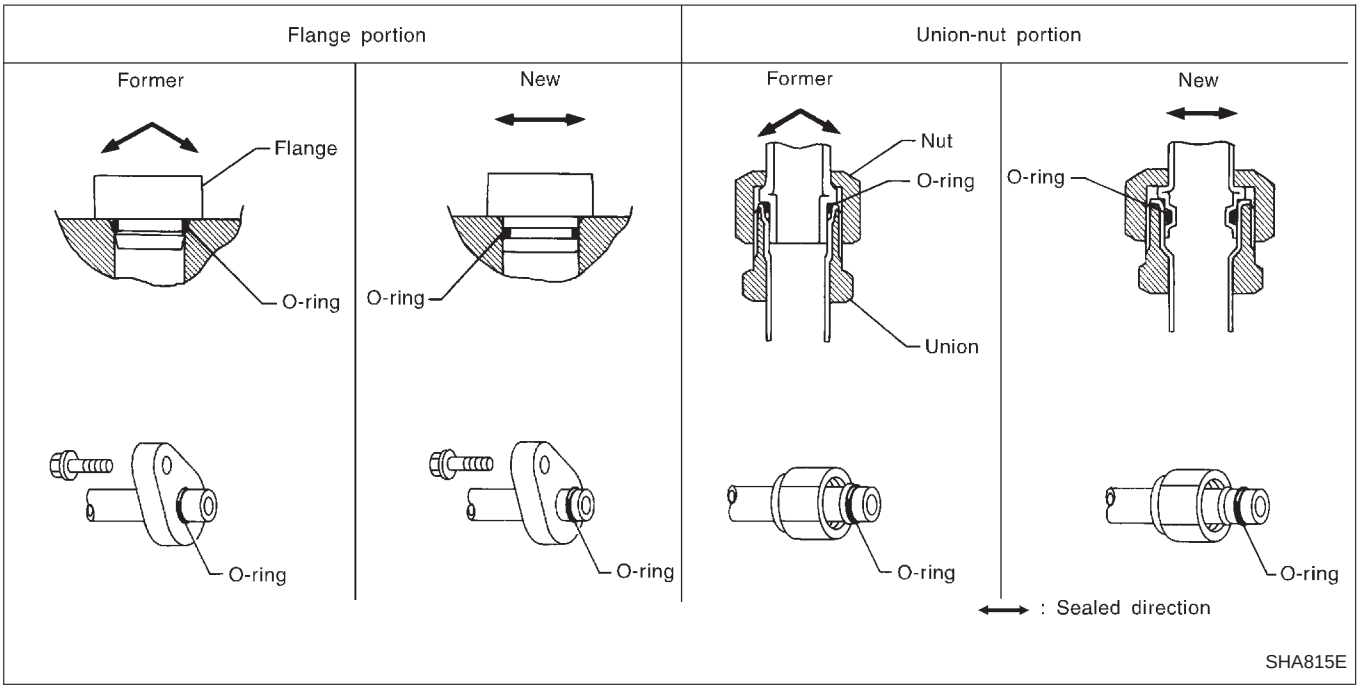


### O-RING AND REFRIGERANT CONNECTION

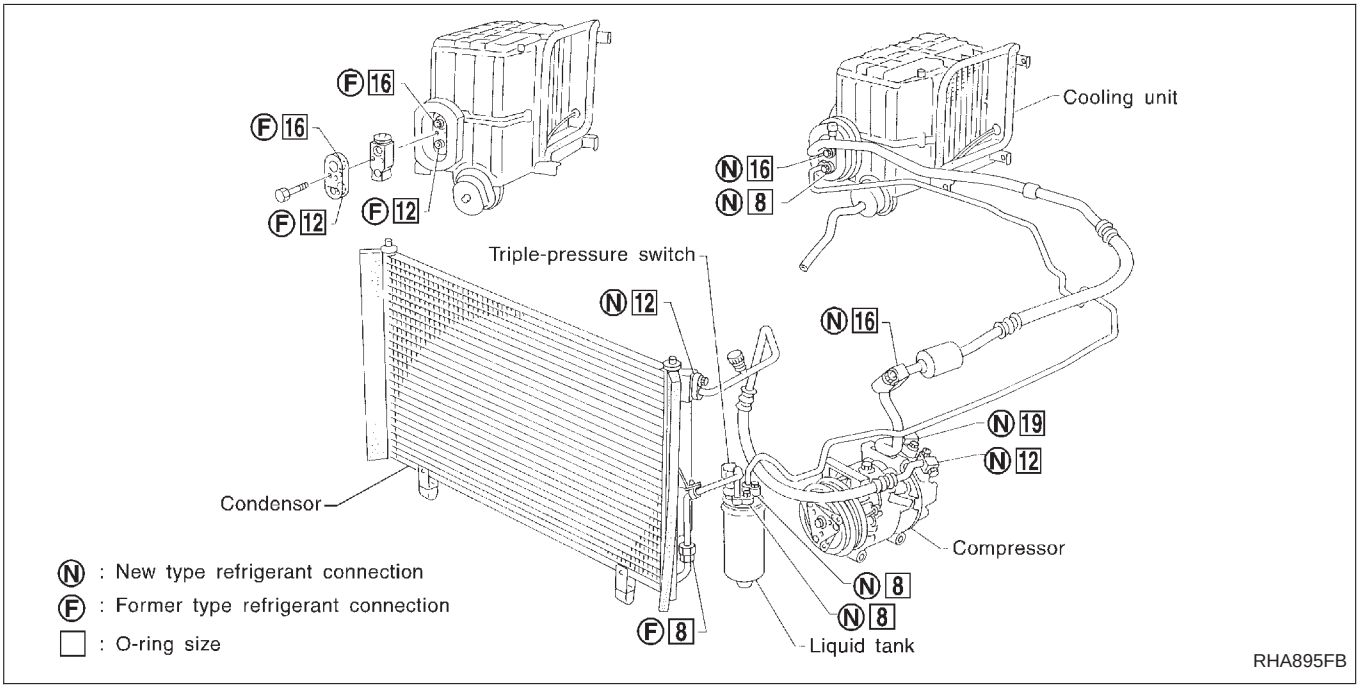


**CAUTION:**

**The new and former refrigerant connections use different O-ring configurations. Do not confuse O-rings since they are not interchangeable. If a wrong O-ring is installed, refrigerant will leak at, or around, the connection.**

## Precautions for Refrigerant Connection (Cont'd)

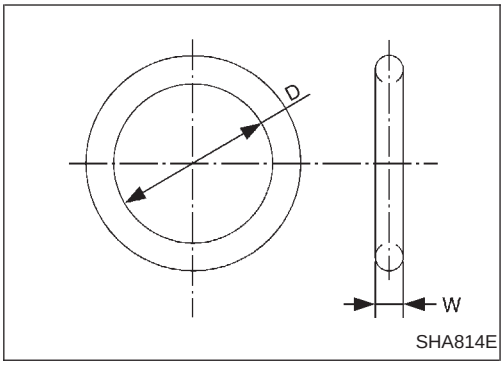


### O-ring part numbers and specifications

| Connection type | O-ring size | Part number | D mm (in) | W mm (in) |
|---|---|---|---|---|
| New | 8 | 92471 N8210 | 6.8 (0.268) | 1.85 (0.0728) |
| Former | | 92470 N8200 | 6.07 (0.2390) | 1.78 (0.0701) |
| New | 12 | 92472 N8210 | 10.9 (0.429) | 2.43 (0.0957) |
| Former | | 92475 71L00 | 11.0 (0.433) | 2.4 (0.094) |
| New | 16 | 92473 N8210 | 13.6 (0.535) | 2.43 (0.0957) |
| Former | | 92475 72L00 | 14.3 (0.563) | 2.3 (0.091) |
| New | 19 | 92474 N8210 | 16.5 (0.650) | 2.43 (0.0957) |

**WARNING:**

**Make sure all refrigerant is discharged into the recycling equipment and the pressure in the system is less than atmospheric pressure. Then gradually loosen the discharge side hose fitting and remove it.**

**CAUTION:**

**When replacing or cleaning refrigerant cycle components, observe the following.**

- **When the compressor is removed, store it in the same position as it is when mounted on the car. Failure to do so will cause lubricant to enter the low pressure chamber.**
- **When connecting tubes, always use a torque wrench and a back-up wrench.**
- **After disconnecting tubes, immediately plug all openings to prevent entry of dirt and moisture.**
- **When installing an air conditioner in the vehicle, connect the pipes as the final stage of the operation. Do not remove the seal caps of pipes and other components until just before required for connection.**
- **Allow components stored in cool areas to warm to working area temperature before removing seal caps. This prevents condensation from forming inside A/C components.**
- **Thoroughly remove moisture from the refrigeration system before charging the refrigerant.**
- **Always replace used O-rings.**
- **When connecting tube, apply lubricant to circle of the O-rings shown in illustration. Be careful not to apply lubricant to threaded portion.**
  **Lubricant name: Nissan A/C System Oil Type S**
  **Part number: KLH00-PAGS0**
- **O-ring must be closely attached to dented portion of tube.**
- **When replacing the O-ring, be careful not to damage O-ring and tube.**
- **Connect tube until you hear it click, then tighten the nut or bolt by hand until snug.**
  **Make sure that the O-ring is installed to tube correctly.**
- **After connecting line, conduct leak test and make sure that there is no leakage from connections. When the gas leaking point is found, disconnect that line and replace the O-ring. Then tighten connections of seal seat to the specified torque.**

## Precautions for Refrigerant Connection (Cont'd)

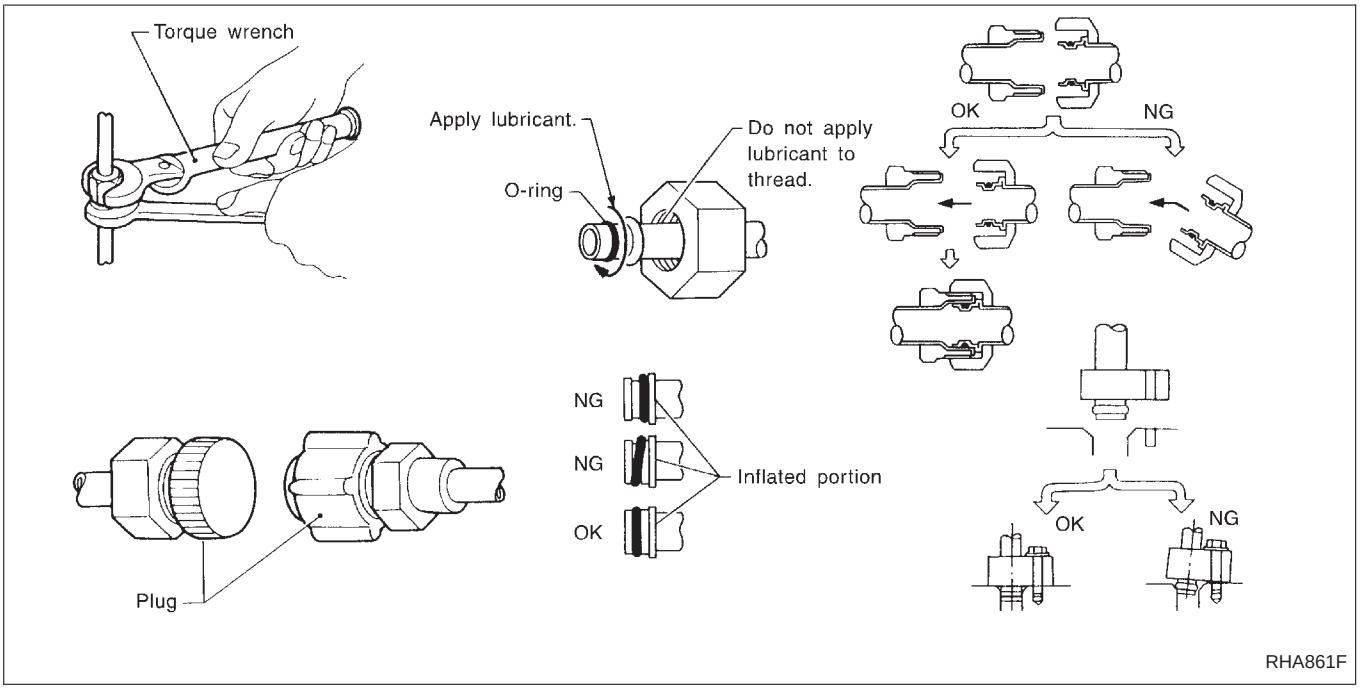


## Precautions for Servicing Compressor

- **Plug all openings to prevent moisture and foreign matter from entering.**
- **When the compressor is removed, store it in the same position as it is when mounted on the car.**
- **When replacing or repairing compressor, follow "Maintenance of Lubricant Quantity in Compressor" exactly. Refer to HA-128.**
- **Keep friction surfaces between clutch and pulley clean. If the surface is contaminated, with lubricant, wipe it off by using a clean waste cloth moistened with thinner.**
- **After compressor service operation, turn the compressor shaft by hand more than five turns in both directions. This will equally distribute lubricant inside the compressor. After the compressor is installed, let the engine idle and operate the compressor for one hour.**
- **After replacing the compressor magnet clutch, apply voltage to the new one and check for normal operation.**

## Special Service Tools

The actual shapes of Kent-Moore tools may differ from those of special service tools illustrated here.

| Tool number<br>(Kent-Moore No.)<br>Tool name | Description |
|---|---|
| KV99106100<br>(J-41260)<br>Clutch disc wrench | Removing center bolt<br> 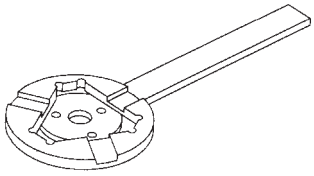 <br>NT232<br> 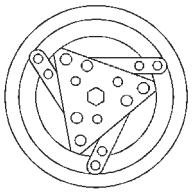 <br>When replacing the magnet clutch in the above compressor, use a clutch disc wrench with the pin side on the clutch disc to remove it.<br> 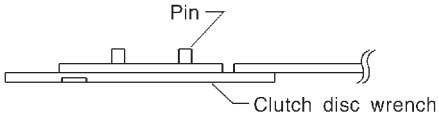 <br><br>NT378 |
| KV99232340<br>(J-38874)<br>or<br>KV992T0001<br>( — )<br>Clutch disc puller | Removing clutch disc<br> 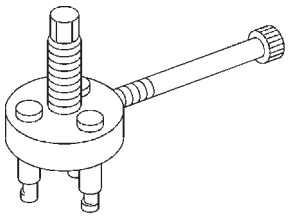 <br>NT376 |
| KV99106200<br>(J-41261)<br>Pulley installer | Installing pulley<br> 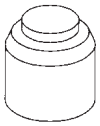 <br>NT235 |

## HFC-134a (R-134a) Service Tools and Equipment

Never mix HFC-134a refrigerant and/or its specified lubricant with CFC-12 (R-12) refrigerant and/or its lubricant.
Separate and non-interchangeable service equipment must be used for handling each type of refrigerant/lubricant.
Refrigerant container fittings, service hose fittings and service equipment fittings (equipment which handles refrigerant and/or lubricant) are different between CFC-12 (R-12) and HFC-134a (R-134a). This is to avoid mixed use of the refrigerants/lubricant.
Adapters that convert one size fitting to another must never be used: refrigerant/lubricant contamination will occur and compressor failure will result.

| Tool number<br>(Kent-Moore No.)<br>Tool name | Description | Note |
|---|---|---|
| HFC-134a (R-134a) refrigerant | 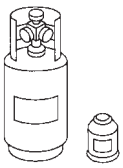 <br>NT196 | Container color: Light blue<br>Container marking: HFC-134a (R-134a)<br>Fitting size: Thread size<br>● large container 1/2″-16 ACME |
| KLH00-PAGS0<br>( — )<br>Nissan A/C System Oil Type S |  <br>NT197 | Type: Poly alkylene glycol oil (PAG), type S<br>Application: HFC-134a (R-134a) swash plate (piston) compressors (Nissan only)<br>Lubricity: 40 mℓ (1.4 US fl oz, 1.4 Imp fl oz) |
| (J-39500-INF)<br>Recovery/Recycling Recharging equipment (ACR4) | 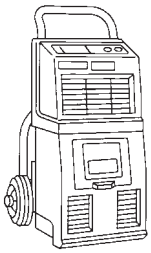 <br>NT195 | Function: Refrigerant Recovery and Recycling and Recharging |
| (J-41995)<br>A/C leak detector | 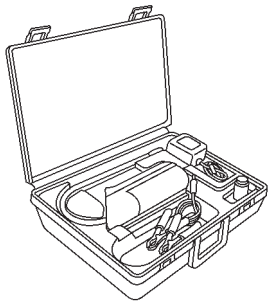 <br>AHA281A | Function: Checks for refrigerant leaks. |

## HFC-134a (R-134a) Service Tools and Equipment (Cont'd)

| Tool number<br>(Kent-Moore No.)<br>Tool name | Description | Note |
|---|---|---|
| (J-43926)<br>Refrigerant dye leak detection kit<br>Kit includes:<br>(J-42220) UV lamp and UV safety glasses<br>(J-41459) Refrigerant dye injector<br>(J-41447) qty. 24<br>R-134a refrigerant dye<br>(J-43872) Refrigerant dye cleaner | 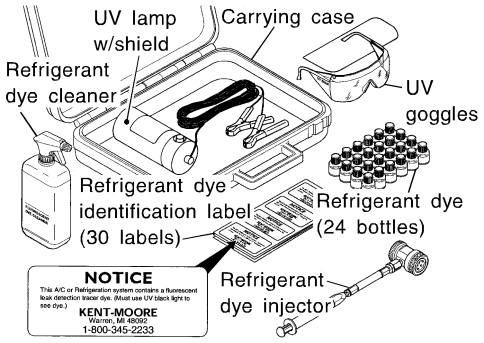 <br>SHA437F | Power supply:<br>DC 12V (Battery terminal) |
| (J-42220)<br>Fluorescent dye leak detector | UV lamp<br>UV safety glasses<br> 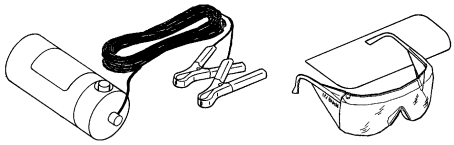 <br>SHA438F | Power supply: DC 12V (Battery terminal)<br>For checking refrigerant leak when fluorescent dye is installed in A/C system.<br>Includes: UV lamp and UV safety glasses |
| (J-41447)<br>R134a Fluorescent Leak Detection Dye (Box of 24, 1/4 ounce bottles) | Dye<br> 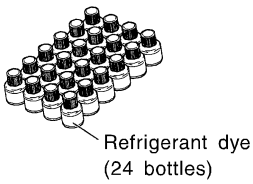 <br>SHA439F | Application: For R-134a PAG oil<br>Container: 1/4 ounce (7.4 cc) bottle<br>(Includes self-adhesive dye identification labels for affixing to vehicle after charging system with dye.) |
| (J-41459)<br>R134a Dye Injector<br>Use with J-41447, 1/4 ounce bottle | Dye injector<br> 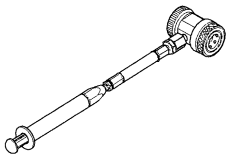 <br>SHA440F | For injecting 1/4 ounce of Fluorescent Leak Detection Dye into A/C system. |
| (J-43872)<br>Dye cleaner |  <br>SHA441F | For cleaning dye spills. |

## HFC-134a (R-134a) Service Tools and Equipment (Cont'd)

| Tool number<br>(Kent-Moore No.)<br>Tool name | Description | Note |
|---|---|---|
| (J-39183)<br>Manifold gauge set (with hoses and couplers) | 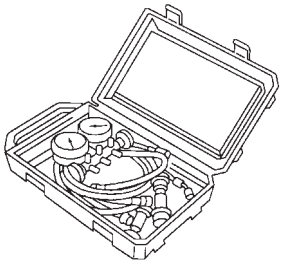 <br>NT199 | Identification:<br>● The gauge face indicates R-134a.<br>Fitting size: Thread size<br>● 1/2″-16 ACME |
| Service hoses<br>● High side hose (J-39501-72)<br>● Low side hose (J-39502-72)<br>● Utility hose (J-39476-72) | 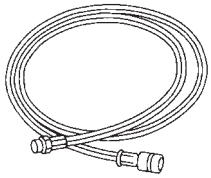 <br>NT201 | Hose color:<br>● Low hose: Blue with black stripe<br>● High hose: Red with black stripe<br>● Utility hose: Yellow with black stripe or green with black stripe<br>Hose fitting to gauge:<br>● 1/2″-16 ACME |
| Service couplers<br>● High side coupler (J-39500-20)<br>● Low side coupler (J-39500-24) | 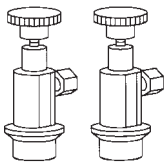 <br>NT202 | Hose fitting to service hose:<br>● M14 x 1.5 fitting is optional or permanently attached. |
| (J-39650)<br>Refrigerant weight scale | 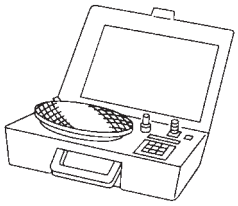 <br>NT200 | For measuring of refrigerant<br>Fitting size: Thread size<br>● 1/2″-16 ACME |
| (J-39649)<br>Vacuum pump<br>(Including the isolator valve) | 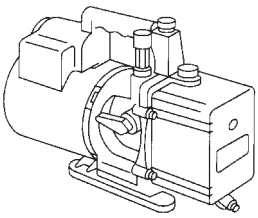 <br>NT203 | Capacity:<br>● Air displacement: 4 CFM<br>● Micron rating: 20 microns<br>● Oil capacity: 482 g (17 oz)<br>Fitting size: Thread size<br>● 1/2″-16 ACME |

## HFC-134a (R-134a) Service Tools and Equipment (Cont'd)

### COMMERCIAL SERVICE TOOL

| Tool name | Description | Note |
|---|---|---|
| Refrigerant identifier equipment | 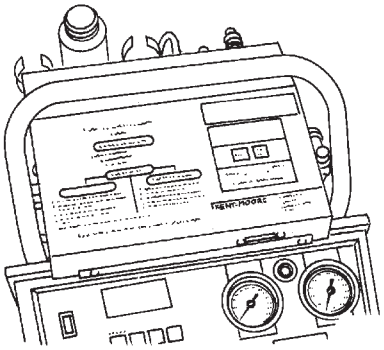 NT765 | Function: Checks refrigerant purity and for system contamination. |

## Precautions for Service Equipment

### RECOVERY/RECYCLING EQUIPMENT

Be certain to follow the manufacturers instructions for machine operation and machine maintenance. Never introduce any refrigerant other than that specified into the machine.

### ELECTRONIC LEAK DETECTOR

Be certain to follow the manufacturer's instructions for tester operation and tester maintenance.

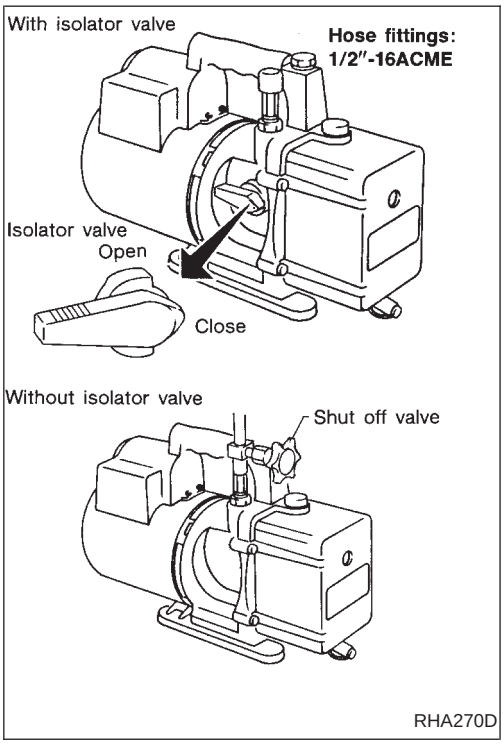


### VACUUM PUMP

The lubricant contained inside the vacuum pump is not compatible with the specified lubricant for HFC-134a (R-134a) A/C systems. The vent side of the vacuum pump is exposed to atmospheric pressure. So the vacuum pump lubricant may migrate out of the pump into the service hose. This is possible when the pump is switched off after evacuation (vacuuming) and hose is connected to it.

To prevent this migration, use a manual valve placed near the hose-to-pump connection, as follows.

- Usually vacuum pumps have a manual isolator valve as part of the pump. Close this valve to isolate the service hose from the pump.
- For pumps without an isolator, use a hose equipped with a manual shut-off valve near the pump end. Close the valve to isolate the hose from the pump.
- If the hose has an automatic shut off valve, disconnect the hose from the pump. As long as the hose is connected, the valve is open and lubricating oil may migrate.

Some one-way valves open when vacuum is applied and close under a no vacuum condition. Such valves may restrict the pump's ability to pull a deep vacuum and are not recommended.

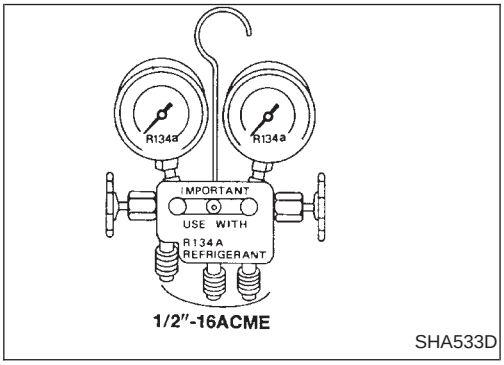


### MANIFOLD GAUGE SET

Be certain that the gauge face indicates R-134a or 134a. Be sure the gauge set has 1/2″-16 ACME threaded connections for service hoses. Confirm the set has been used only with refrigerant HFC-134a (R-134a) and specified lubricants.

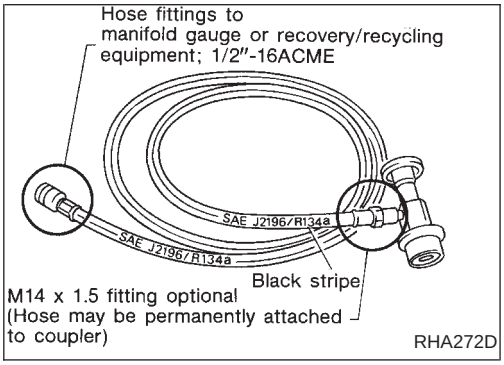


### SERVICE HOSES

Be certain that the service hoses display the markings described (colored hose with black stripe). All hoses must include positive shut off devices (either manual or automatic) near the end of the hoses opposite the manifold gauge.

## Precautions for Service Equipment (Cont'd)

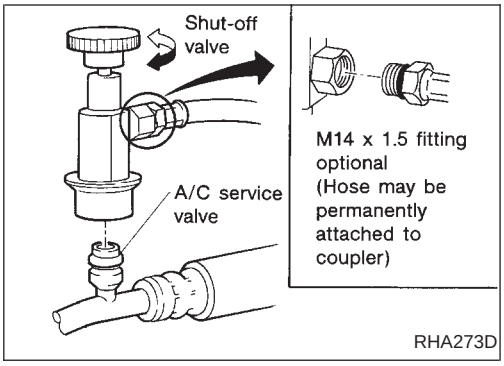


### SERVICE COUPLERS

Never attempt to connect HFC-134a (R-134a) service couplers to an CFC-12 (R-12) A/C system. The HFC-134a (R-134a) couplers will not properly connect to the CFC-12 (R-12) system. However, if an improper connection is attempted, discharging and contamination may occur.

| Shut-off valve rotation | A/C service valve |
|---|---|
| Clockwise | Open |
| Counterclockwise | Close |

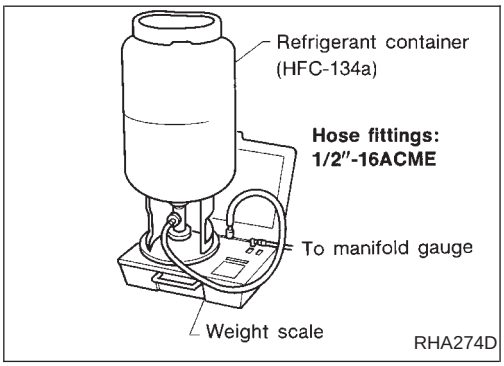


### REFRIGERANT WEIGHT SCALE

Verify that no refrigerant other than HFC-134a (R-134a) and specified lubricants have been used with the scale. If the scale controls refrigerant flow electronically, the hose fitting must be 1/2″-16 ACME.

### CALIBRATING ACR4 WEIGHT SCALE

Calibrate the scale every 3 months.
To calibrate the weight scale on the ACR4 (J-39500-INF):

1. Press **Shift/Reset** and **Enter** at the same time.
2. Press **8787**. **"A1"** will be displayed.
3. Remove all weight from the scale.
4. Press **0**, then press **Enter, "0.00"** will be displayed and change to **"A2".**
5. Place a known weight (dumbbell of similar weight), between 10 and 19 lbs., on the center of the weight scale.
6. Enter the known weight using 4 digits. (Example 10 lb = 10.00, 10.5 lb = 10.50)
7. Press **Enter** — the display returns to the vacuum mode.
8. Press **Shift/Reset** and **Enter** at the same time.
9. Press **6** — the known weight on the scale is displayed.
10. Remove the known weight from the scale. **"0.00"** will be displayed.
11. Press **Shift/Reset** to return the ACR4 to the program mode.

### CHARGING CYLINDER

Using a charging cylinder is not recommended. Refrigerant may be vented into air from cylinder's top valve when filling the cylinder with refrigerant. Also, the accuracy of the cylinder is generally less than that of an electronic scale or of quality recycle/recharge equipment.

## Refrigeration Cycle

### REFRIGERANT FLOW

The refrigerant flow is in the standard pattern. Refrigerant flows through the compressor, condenser, liquid tank, evaporator, and back to the compressor.
The refrigerant evaporation through the evaporator coil is controlled by an externally pressure equalized expansion valve, located inside the evaporator case.

### FREEZE PROTECTION

Under normal operating conditions, when the AUTO is switched ON, the compressor runs continuously, and the evaporator pressure, and therefore temperature, is controlled by the V-6 variable displacement compressor to prevent freeze up.

### REFRIGERANT SYSTEM PROTECTION

#### Triple-pressure switch

The triple-pressure switch is located on the liquid tank. If the system pressure rises or falls out of specifications, the switch opens to interrupt compressor clutch operation. Triple-pressure switch closes to turn on the cooling fan to reduce system pressure.

#### Fusible plug

Opens at temperatures above 105°C (221°F), thereby discharging refrigerant to the atmosphere. If this plug is melted, check the refrigerant line and replace liquid tank.

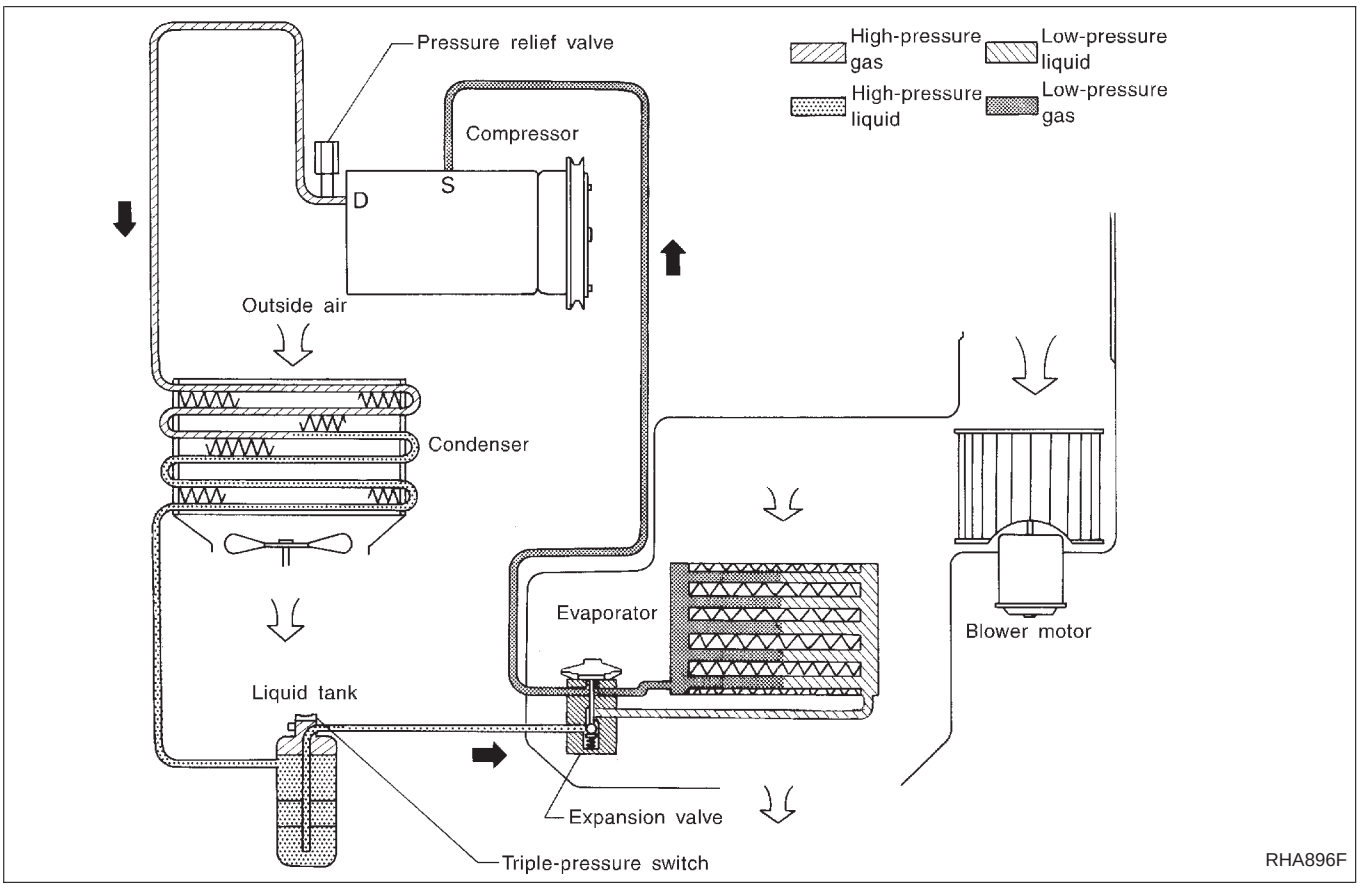

## V-6 Variable Displacement Compressor

### DESCRIPTION

#### General

The variable compressor is basically a swash plate type that changes piston stroke in response to the required cooling capacity.
The tilt of the swash plate allows the piston's stroke to change so that refrigerant discharge can be continuously changed from 10.5 to 184 $cm^3$ (0.641 to 11.228 cu in).

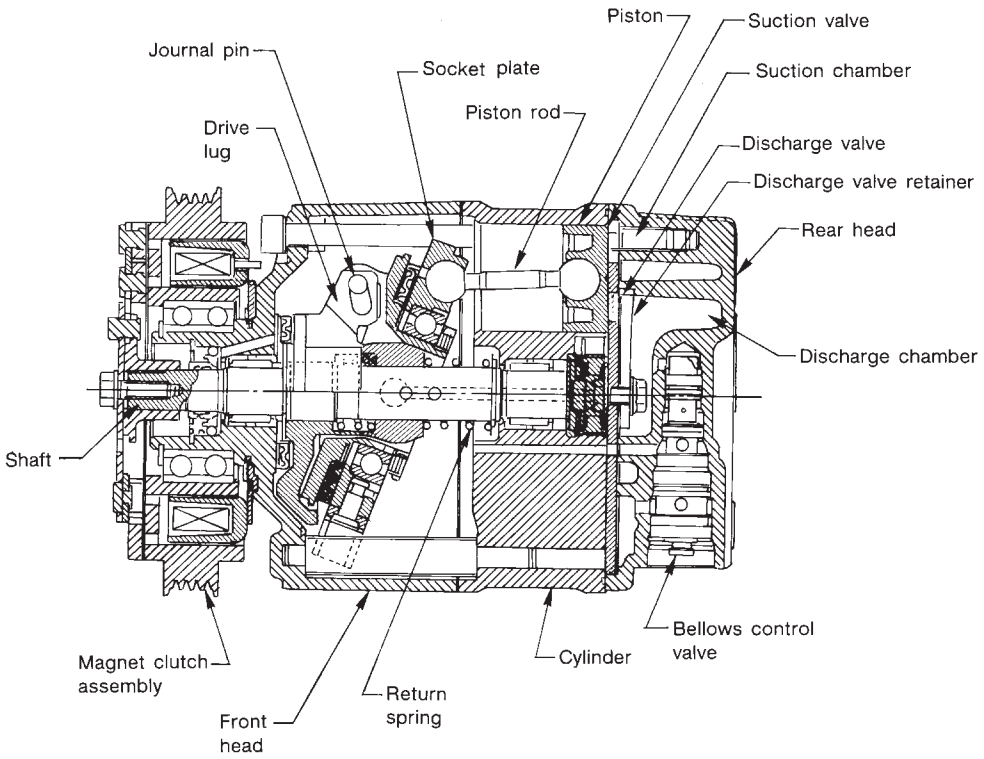


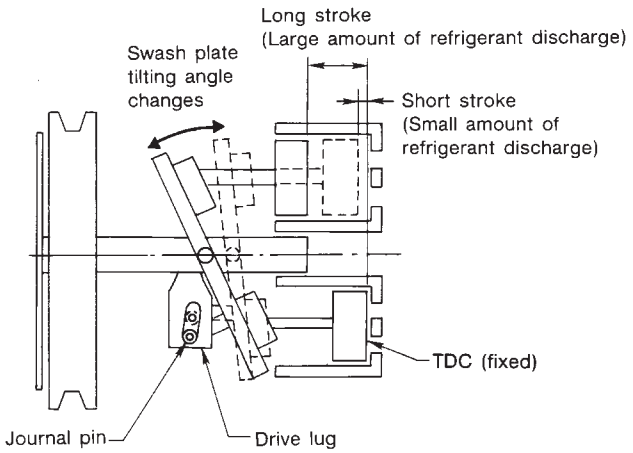


| Discharge control | Discharge capacity $cm^3$ (cu in)/rev. | Piston stroke length mm (in) |
|---|---|---|
| Minimum | 10.5 (0.641) | 1.6 (0.063) |
| Maximum | 184 (11.228) | 28.6 (1.126) |

RHA037DA

## Operation

**1. Operation control valve**

Operation control valve is located in the suction port (low-pressure) side, and opens or closes in response to changes in refrigerant suction pressure.
Operation of the valve controls the internal pressure of the crankcase.
The angle of the swash plate is controlled between the crankcase's internal pressure and the piston cylinder pressure.

**2. Maximum cooling**

Refrigerant pressure on the low-pressure side increases with an increase in heat loads.
When this occurs, the control valve's bellows compress to open the low-pressure side valve and close the high-pressure side valve.
This causes the following pressure changes:

- the crankcase's internal pressure to equal the pressure on the low-pressure side;
- the cylinder's internal pressure to be greater than the crankcase's internal pressure.

Under this condition, the swash plate is set to the maximum stroke position.

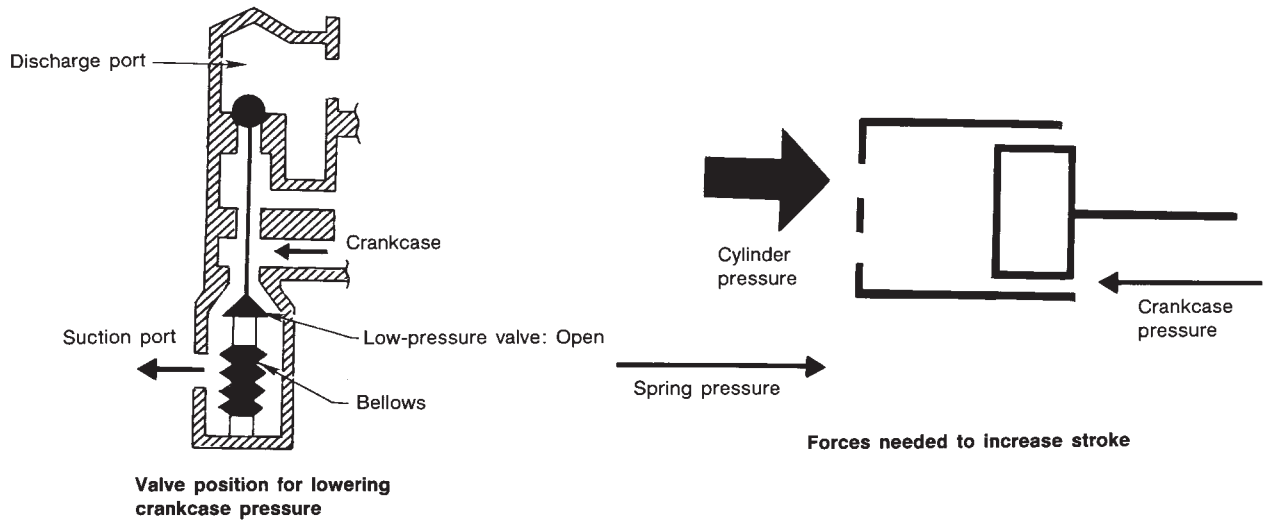


RHA473C

**3. Capacity control**

- Refrigerant pressure on suction side is low during high speed driving or when ambient or interior temperature is low.
- The bellows expands when refrigerant pressure on the suction pressure side drops below approximately 177 kPa (1.8 kg/cm$^2$, 26 psi).
  Since suction pressure is low, it makes the suction port close and the discharge port open. Thus, crankcase pressure becomes high as high pressure enters the crankcase.
- The force acts around the journal pin near the swash plate, and is generated by the pressure difference before and behind the piston.
  The drive lug and journal pin are located where the piston generates the highest pressure. Piston pressure is between suction pressure Ps and discharge pressure Pd, which is near suction pressure Ps. If crankcase pressure Pc rises due to capacity control, the force around the journal pin makes the swash plate angle decrease and also the piston stroke decrease. In other words, crankcase pressure increase triggers pressure difference between the piston and the crankcase. The pressure difference changes the angle of the swash plate.

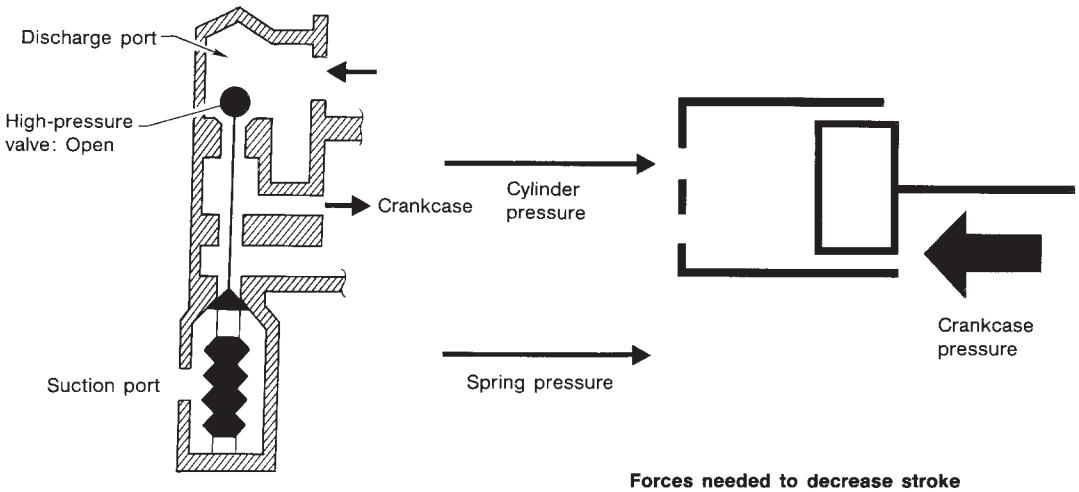


**Valve position for raising crankcase pressure**

**Forces needed to decrease stroke**

RHA474C

## Component Layout

**SEC. 270•271•272•273**

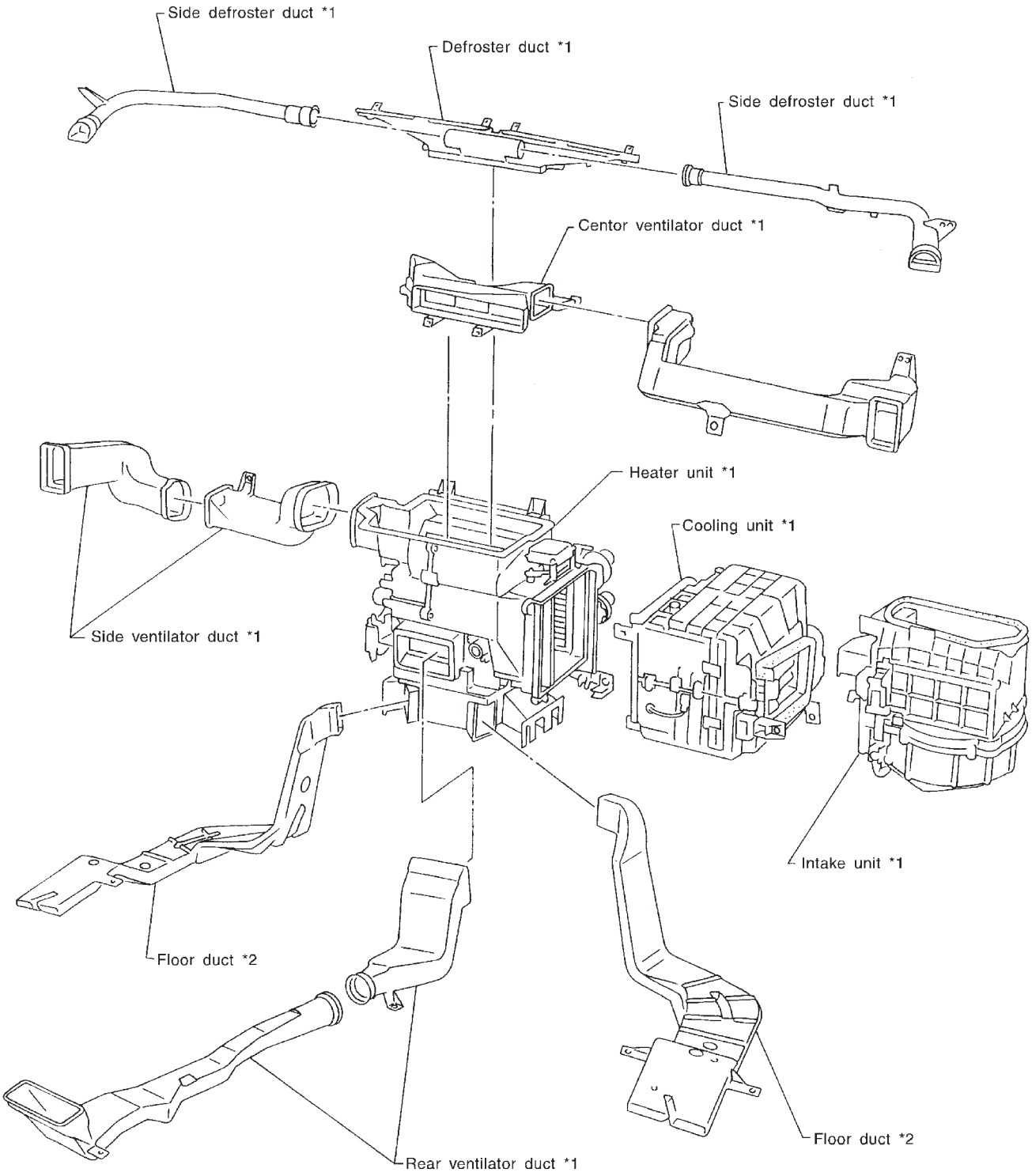


*1 : For removal, it is necessary to remove instrument assembly.

*2 : For removal, it is necessary to remove front seat.

RHA897F

## Air Conditioner LAN System

### OVERVIEW

The LAN system consists of auto amp., air mix door motor, mode door motor and bi-level door motor.
A configuration of these components is shown in the diagram below.

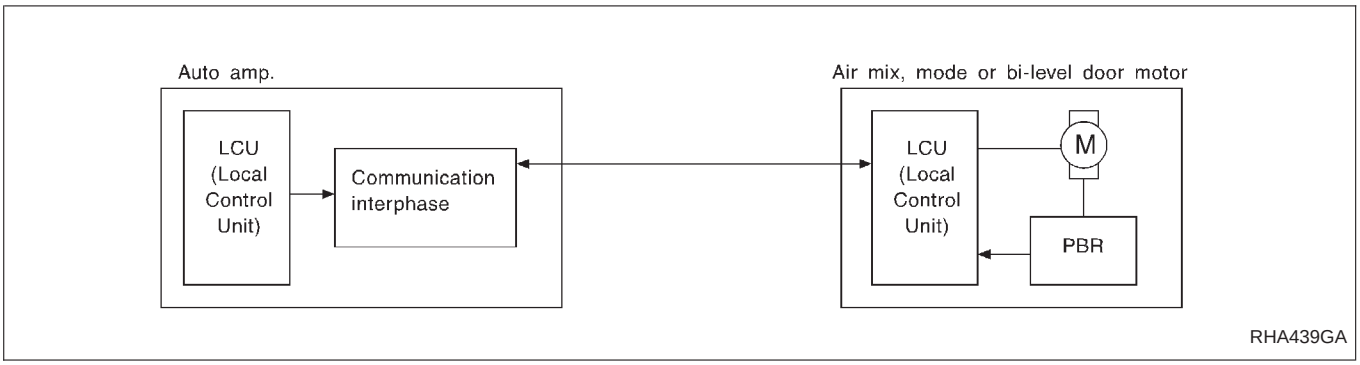


### SYSTEM CONSTRUCTION

A small network is constructed between the auto amplifier, air mix door motor, mode door motor and bi-level door motor. The auto amplifier and motors are connected by data transmission lines and motor power supply lines. The LAN network is built through the ground circuits of the three motors.
Addresses, motor opening angle signals, motor stop signals and error checking messages are all transmitted through the data transmission lines connecting the auto amplifier and three motors.
The following functions are contained in LCUs built into the air mix door motor, the mode door motor and bi-level door motor.

- Address
- Motor opening angle signals
- Data transmission
- Motor stop and drive decision
- Opening angle sensor (PBR function)
- Comparison
- Decision (Auto amplifier indicated value and motor opening angle comparison)

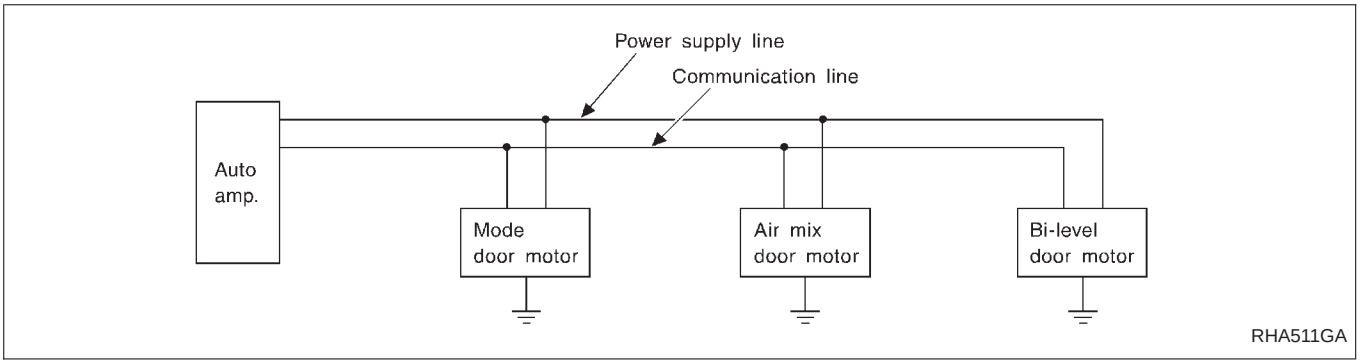


### OPERATION

The auto amplifier receives data from each of the sensors. The amplifier sends air mix door, mode door and bi-level opening angle data to the air mix door motor LCU, mode door motor LCU and bi-level door motor LCU. The air mix door motor, mode door motor and bi-level door motor LCU read their respective signals according to the address signal. Opening angle indication signals received from the auto amplifier and each of the motor position sensors are compared by the LCUs in each motor with the existing decision and opening angles. Subsequently, HOT/COLD, DEFROST/VENT or OPEN/CLOSE operation is selected. The new selection data is returned to the auto amplifier.

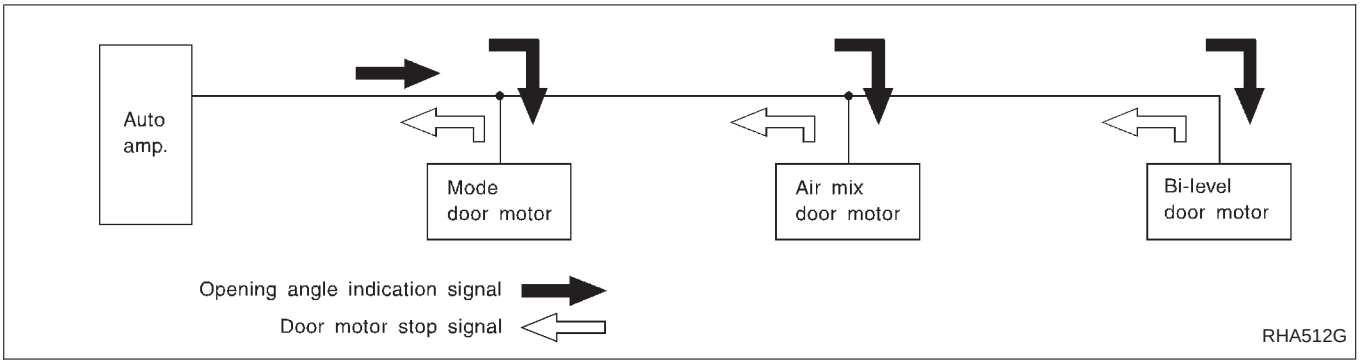


## TRANSMISSION DATA AND TRANSMISSION ORDER

Amplifier data is transmitted consecutively to each of the door motors following the form shown in Figure below.
Start: Initial compulsory signal sent to each of the door motors.
Address: Data sent from the auto amplifier is selected according to data-based decisions made by the air mix door motor, mode door motor and bi-level door motor.
If the addresses are identical, the opening angle data and error check signals are received by the door motor LCUs. The LCUs then make the appropriate error decision. If the opening angle data is normal, door control begins.
If an error exists, the received data is rejected and corrected data received. Finally, door control is based upon the corrected opening angle data.
Opening angle: Data that shows the indicated door opening angle of each door motor.
Error check: Procedure by which sent and received data is checked for errors. Error data is then compiled. The error check prevents corrupted data from being used by the air mix door motor, mode door motor and bi-level door motor. Error data can be related to the following problems.

- Abnormal electrical frequency
- Poor electrical connections
- Signal leakage from transmission lines
- Signal level fluctuation

Stop signal: At the end of each transmission, a stop operation, in-operation, or internal problem message is delivered to the auto amplifier. This completes one data transmission and control cycle.

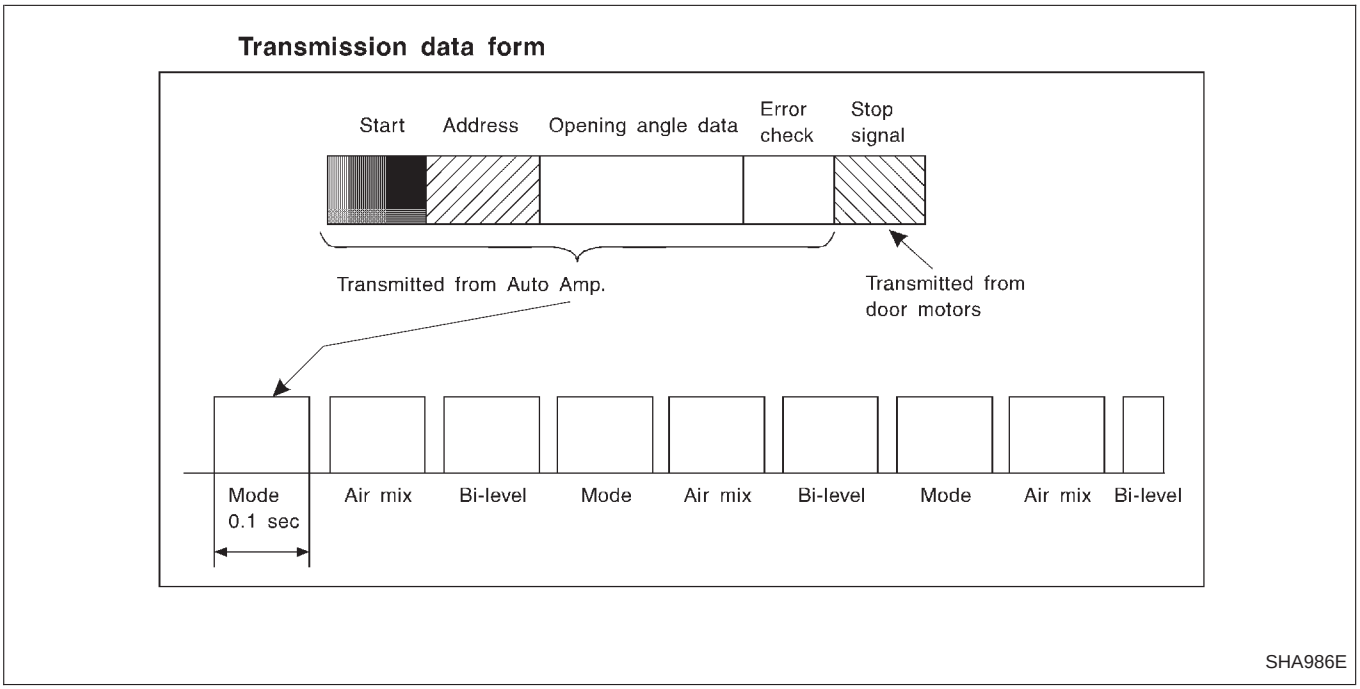

## Automatic Temperature Control (ATC) System

The Automatic Temperature Control (ATC) system provides automatic regulation of the vehicles interior temperature. The operator selects “set temperature”, on which the regulation is based, regardless of the outside temperature changes. This is done by utilizing a microcomputer, also referred to as the automatic amplifier, which receives input signals from several sensors. The automatic amplifier uses these input signals (including the set temperature) to automatically control the ATC system’s outlet air volume, air temperature, air distribution, bi-level door position and rear vent door position.

### AIR MIX DOOR CONTROL

The air mix door is automatically controlled so that in-vehicle temperature is maintained at a predetermined value by: The temperature setting, ambient temperature, in-vehicle temperature and amount of sunload.

### FAN SPEED CONTROL

Blower speed is automatically controlled based on temperature setting, ambient temperature, in-vehicle temperature, intake temperature, amount of sunload and air mix door position.
With FAN switch set to “AUTO”, the blower motor starts to gradually increase air flow volume.
When engine coolant temperature is low, the blower motor operation is delayed to prevent cool air from flowing.

### INTAKE DOOR CONTROL

The intake doors are automatically controlled by: The temperature setting, ambient temperature, in-vehicle temperature, intake temperature, amount of sunload and ON-OFF operation of the compressor.

### OUTLET DOOR CONTROL

The outlet door is automatically controlled by: The temperature setting, ambient temperature, in-vehicle temperature, intake temperature and amount of sunload.

### MAGNET CLUTCH CONTROL

The ECM controls compressor operation using input signals from the throttle position sensor and auto amplifier.

### REAR VENT DOOR CONTROL

Rear vent door is controlled and operated by auto amplifier.

### SELF-DIAGNOSTIC SYSTEM

The self-diagnostic system consists of five steps. Each step can be accessed by pushing the switches on the automatic amplifier.
STEP 1: Checks LEDs and segments of the display.
STEP 2: Checks each sensor circuit for open or short circuit.
STEP 3: Checks mode door position and intake door position.
STEP 4: Checks operation of each actuator.
STEP 5: Checks temperature detected by each sensor, and detects multiplex communication error.
AUXILIARY TRIMMER MECHANISM: Set temperature trimmer.

### MEMORY FUNCTION

With ignition switch turned OFF, the auto amplifier stores in memory the set temperature and inputs of various switches. When the ignition switch is turned ON, the system begins operation with the information stored in memory. The system, then immediately compensates for the actual operating conditions.

## Overview of Control System

The control system consists of a) input sensors and switches, b) the auto amp. (microcomputer), and c) outputs. The relationship of these components is shown in the diagram below:

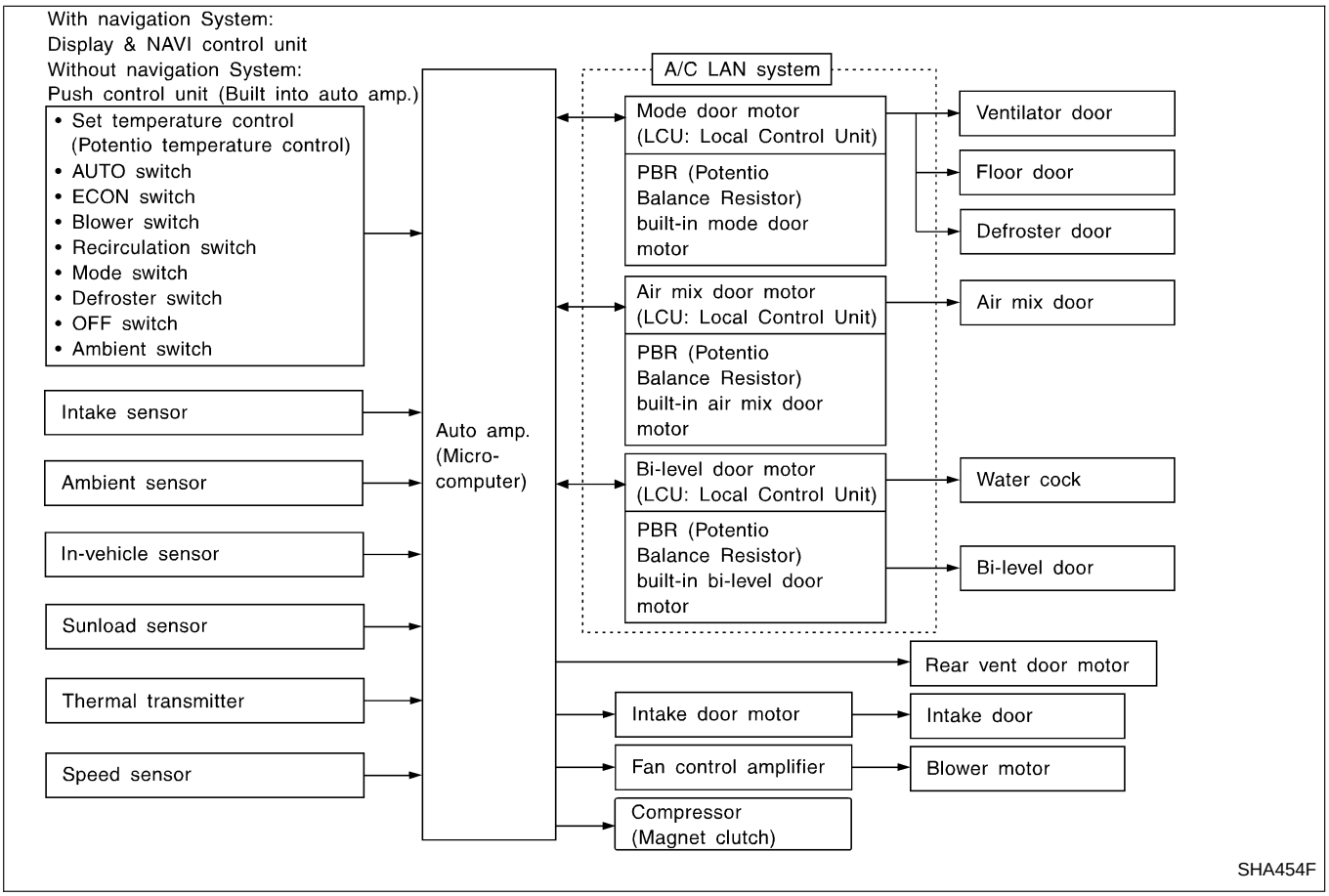


## Control Operation

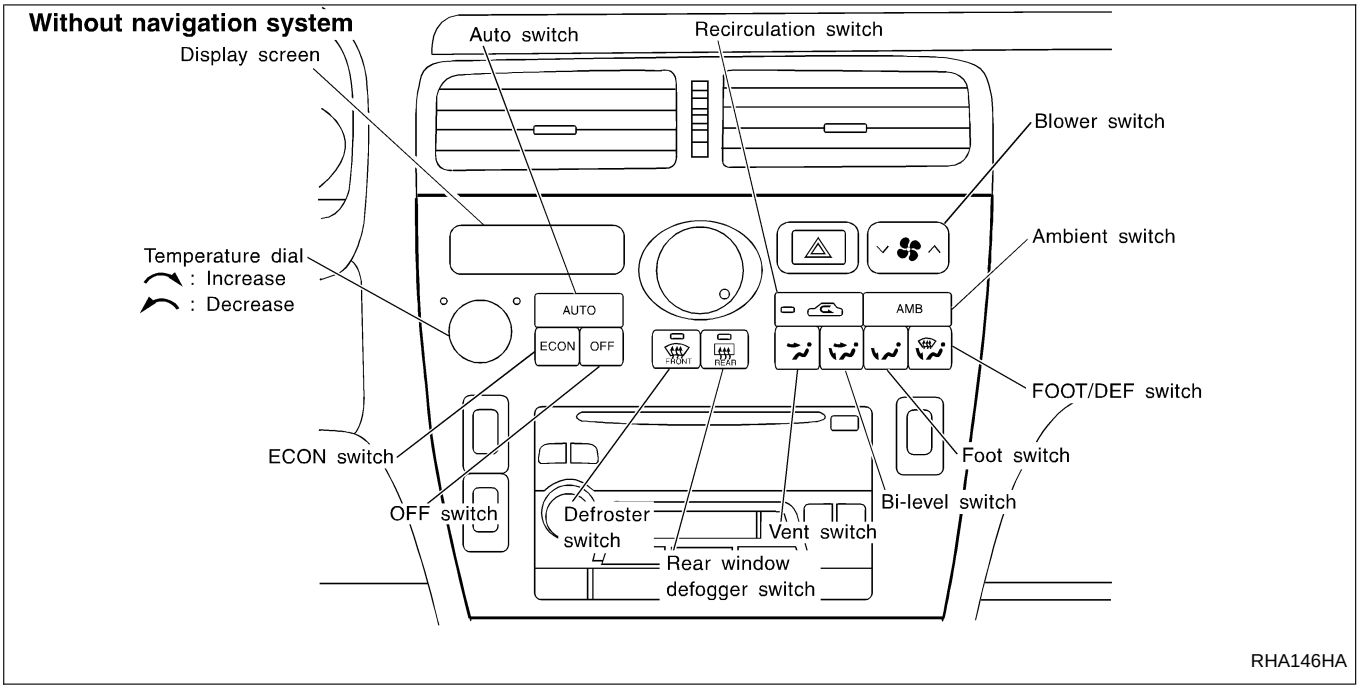

## Control Operation (Cont'd)

### Display screen

Displays the operational status of the system.

### AUTO switch

The compressor, intake doors, air mix door, outlet doors, and blower speed are automatically controlled so that the in-vehicle temperature will reach, and be maintained at the set temperature selected by the operator.

### ECON switch

By pressing the ECON switch once, the auto amplifier decides whether to turn the compressor ON or OFF, depending on the ambient temperature and target temperature. Display should indicate ECON.
By pressing the ECON switch once more, the compressor always turns OFF. Display should not indicate ECON. With the compressor OFF, the system will not remove heat (cool) or de-humidify. The system will maintain the in-vehicle temperature at the set temperature when the set temperature is above the ambient (outside) temperature. The system will set the intake doors to the outside air position.

### Temperature (increase/decrease) dial

Increases or decreases the set temperature.

### OFF switch

The compressor and blower are OFF, the intake doors are set to the outside air position, and the air outlet doors are set to the foot (76% foot and 24% defrost) position.

### BLOWER switch

Manual control of the blower speed. Four speeds are available for manual control (as shown on the display screen):
low , medium low , medium high , high

### AMBIENT switch

Shows the ambient (outside) air temperature on the display screen for 5 seconds.

### RECIRCULATION switch

OFF position: Outside air is drawn into the passenger compartment.
ON position: Interior air is recirculated inside the vehicle.

### DEFROSTER switch

Positions the air outlet doors to the defrost position. Also positions the intake doors to the outside air position.

### Rear window defogger switch

When illumination is ON, rear window is defogged.

### MODE (Vent, Bi-level, Foot, FOOT/DEF) switches

Control the air discharge outlets.

## Control Operation (Cont'd)

**With navigation system**

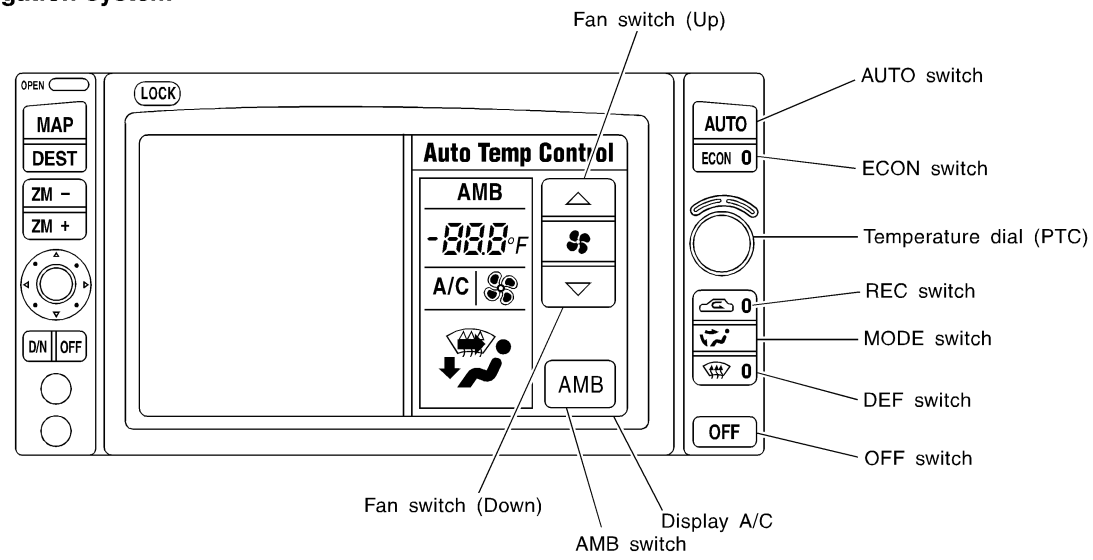


SHA446FA

### DISPLAY SCREEN

Displays the operational status of the system.

### AUTO SWITCH

The compressor, intake doors, air mix door, outlet doors, and blower speed are automatically controlled so that the in-vehicle temperature will reach, and be maintained at the set temperature selected by the operator.

### ECON SWITCH

By pressing the ECON switch, the display should indicate ECON and the compressor always turns OFF. With the compressor OFF, the system will not remove heat (cool) or de-humidify. The system will maintain the in-vehicle temperature at the set temperature when the set temperature is above the ambient (outside) temperature. The system will set the intake doors to the outside air position.

### OFF SWITCH

The compressor and blower are OFF, the intake doors are set to the outside air position, and the air outlet doors are set to the foot (80% foot and 20% defrost) position.

### FAN SWITCH

Manually controls the blower speed. Four speeds are available for manual control (as shown on the display screen):
low , medium low , medium high , high

### RECIRCULATION (REC) SWITCH

OFF position: Outside air is drawn into the passenger compartment.
ON position: Interior air is recirculated inside the vehicle.

### DEFROSTER (DEF) SWITCH

Positions the air outlet doors to the defrost position. Also positions the intake doors to the outside air position.

### MODE SWITCH

Controls the air discharge outlets.

### TEMPERATURE DIAL (POTENTIO TEMPERATURE CONTROL)

Increases or decreases the set temperature.

### AMB (AMBIENT) SWITCH

Shows the ambient (outside) air temperature on the display screen for 5 seconds.

## Discharge Air Flow

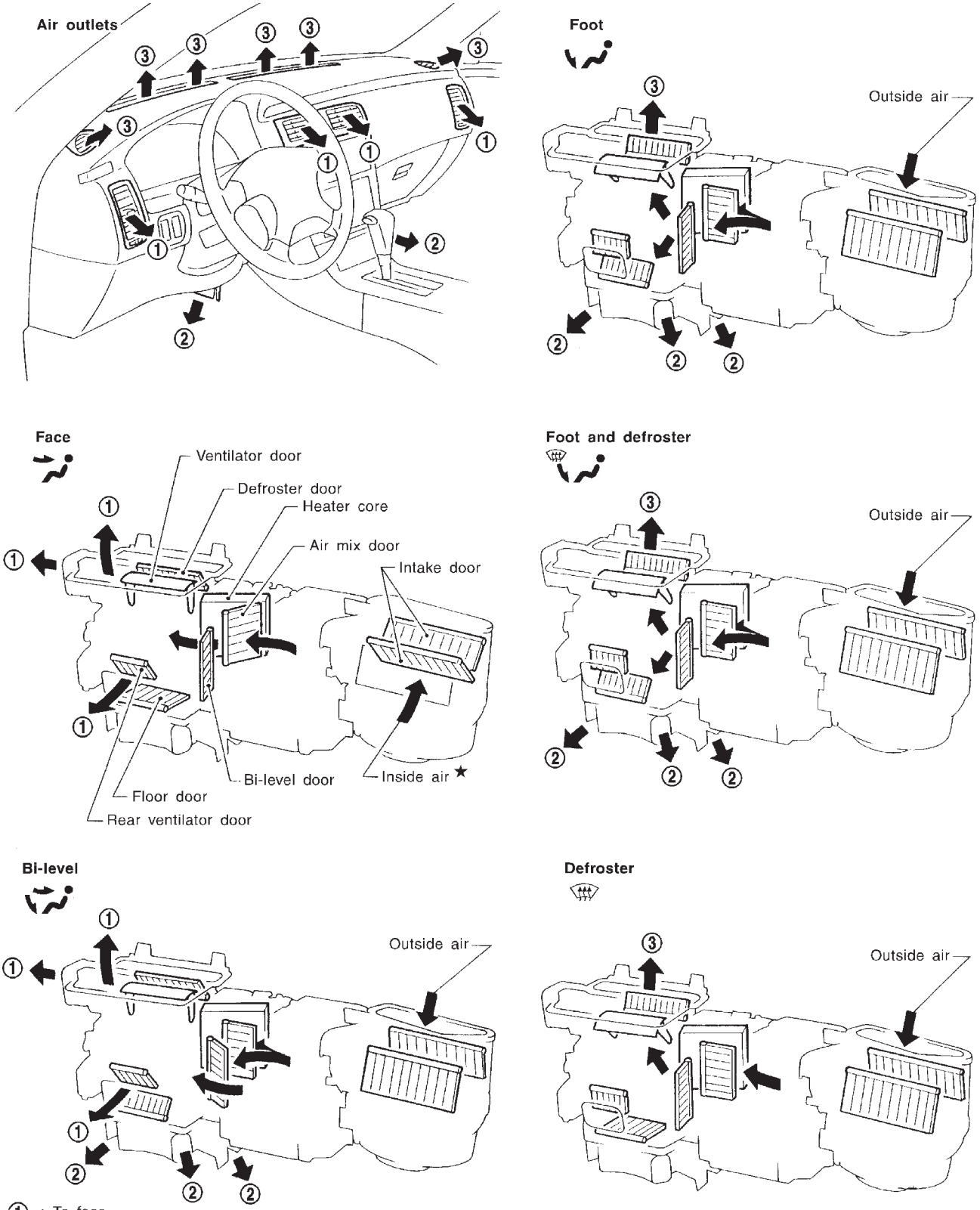


① : To face
② : To floor
③ : To defroster
★ : Air flow in REC position

RHA898F

## Discharge Air Flow (Cont'd)

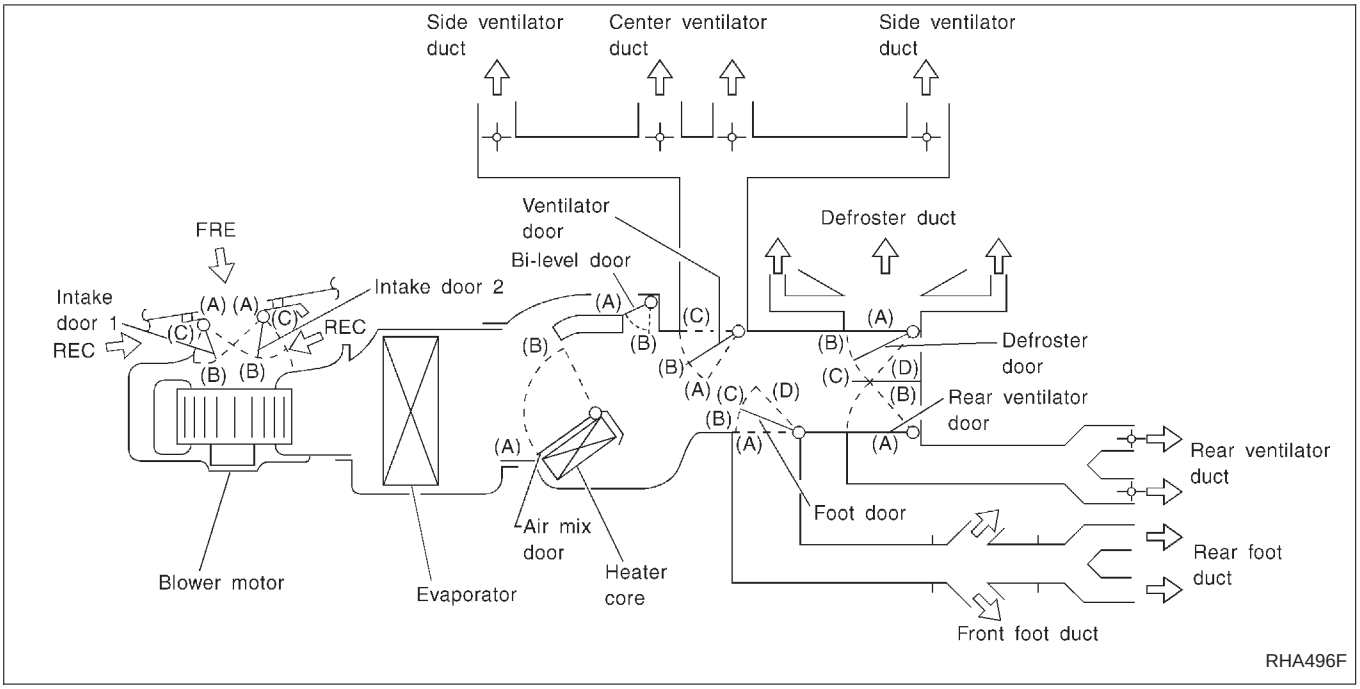


| Position or switch | MODE SW | | | | | DEF SW | | AUTO SW | ECON SW | REC SW | | Temperature dial | | |
|---|---|---|---|---|---|---|---|---|---|---|---|---|---|---|
| | VENT | B/L | B/L2*1 | FOOT | F/D | ON | OFF | | | ON | OFF | | | |
| Door | | | | | | | | AUTO | ECON | | | 18.0°C (65°F) | ~ | 32.0°C (85°F) |
| Ventilator door | (A) | (B) | (C) | (C) | (C) | (C) | — | AUTO | AUTO | — | | — | | |
| Foot door | (A) | (B) | (D) | (C) | (B) | (A) | | | | — | | — | | |
| Defroster door | (A) | (A) | (A) | (B) | (C) | (D) | | | | — | | — | | |
| Air mix door | — | | | | | — | | | | — | | (A) | AUTO | (B) |
| Bi-level door | (A)*2 | AUTO | | | (A) | (A) | | | | — | | — | | |
| Rear ventilator door | AUTO | | (A) | (A) | (A) | (A) | | | | — | | — | | |
| Intake door 1 | — | | | | | (C) | | | | (A) | *3 AUTO | — | | |
| Intake door 2 | — | | | | | | | | | | | — | | |

*1: The B/L2 mode is selected only when the mode door is automatically controlled.
*2: When the air mix door is positioned at (A), the bi-level door is set at (B).
*3: Automatically controlled when REC switch is "OFF".

## How to Perform Trouble Diagnoses for Quick and Accurate Repair

### WORK FLOW

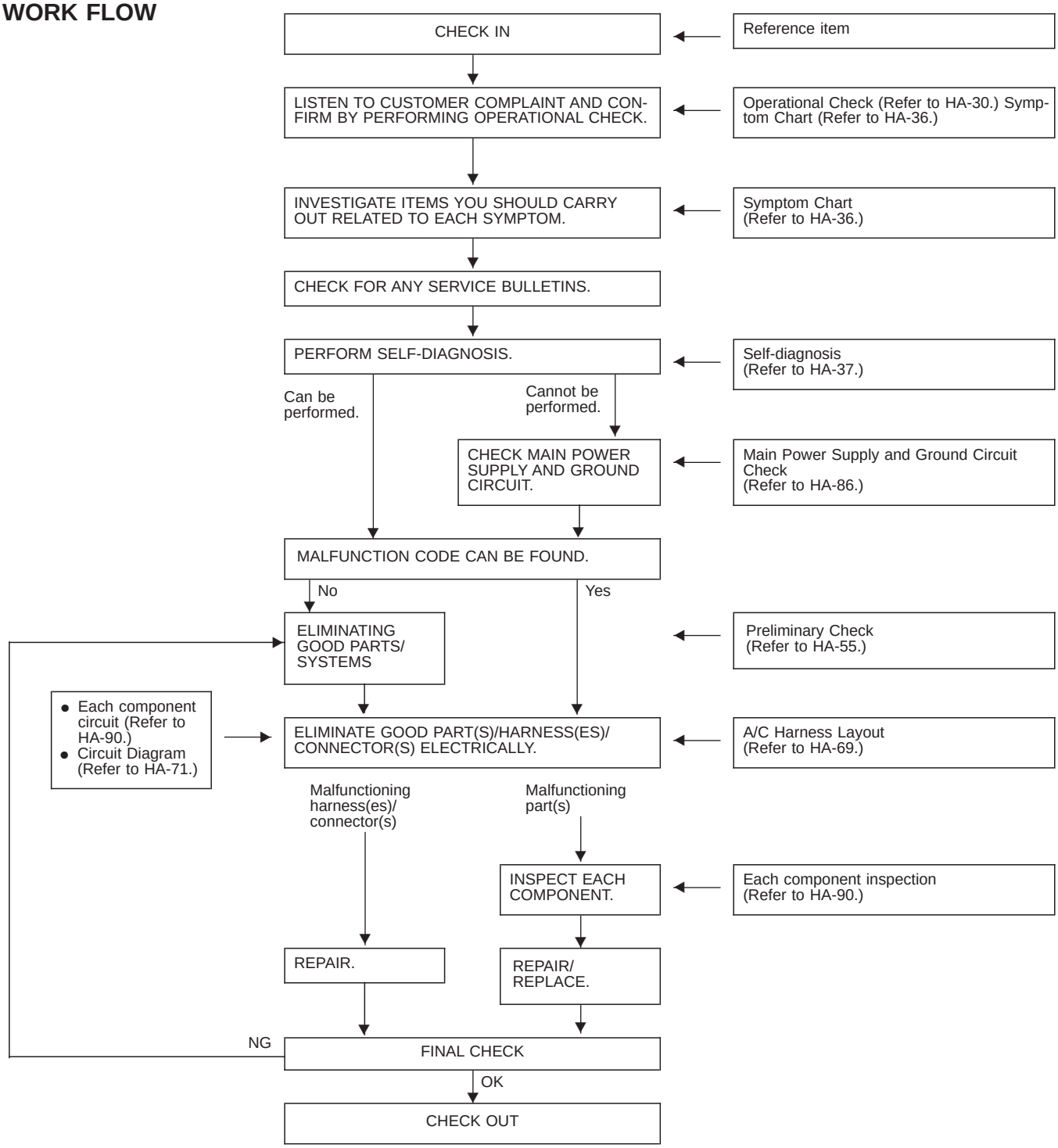

## Operational Check

The purpose of the operational check is to confirm that the system operates properly.

**CONDITIONS:**

**Engine running at normal operating temperature.**

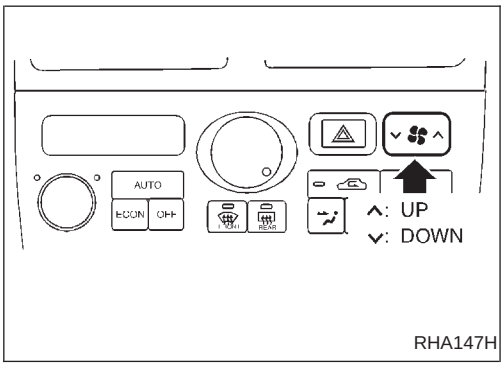

RHA147H

**PROCEDURE (Without navigation system):**

### 1. Check blower

1) Press BLOWER switch ( ∧: Up) one time.
   MANUAL should appear on the display.
   Blower should operate on low speed, and the fan symbol should have one blade lit ( ).
2) Press BLOWER switch one more time.
3) Continue checking blower speed and fan symbol until all four speeds have been checked.
4) Leave blower on high speed.
5) Press BLOWER switch ( ∨: Down) one time. Blower should operate in third speed.
6) Continue checking blower speed and fan symbol until all three speeds have been checked.

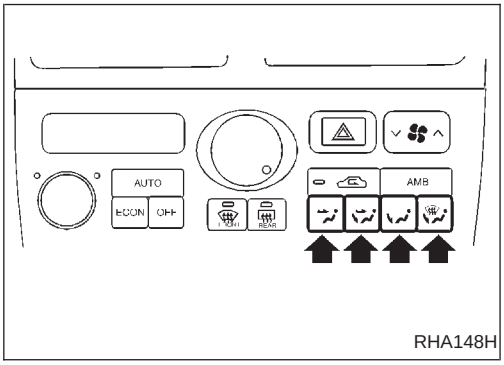

RHA148H

### 2. Check discharge air

1) Press each mode switch.

**Discharge air flow**

| Switch mode | Air outlet/distribution | | | | |
|---|---|---|---|---|---|
| | Face | Front foot | Rear foot | DEF | Rear vent |
| | 80% | – | – | – | 20% |
| | 50% | 24% | 13% | – | 13% |
| 2 | 25% | 45% | 25% | – | – |
| | – | 46% | 30% | 24% | – |
| | – | 37% | 23% | 40% | – |
| | – | – | – | 100% | – |

RHA167F

2) Confirm that discharge air comes out according to the air distribution table at left.

Refer to “Discharge Air Flow”, “DESCRIPTION” (HA-27).

**NOTE:**

**Confirm that the compressor clutch is engaged (visual inspection) and intake door position is at FRESH when the DEF switch is pressed.**

**Confirm that the intake door position is at FRESH when the F/D switch is pressed.**

## Operational Check (Cont'd)

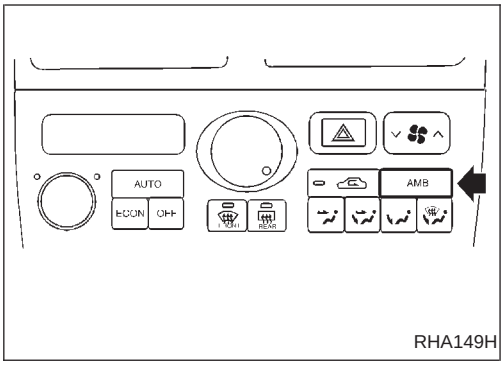

RHA149H

### 3. Check ambient display

Press AMB switch.
Display should show the outside (ambient) temperature for approximately 5 seconds.

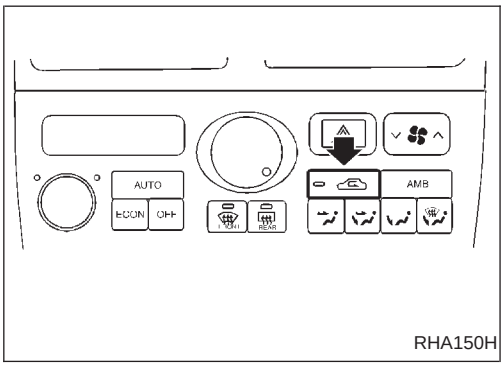

RHA150H

### 4. Check recirculation

1) Press RECIRCULATION switch.
   Recirculation indicator should illuminate.
2) Listen for intake door position change (you should hear blower sound change slightly).

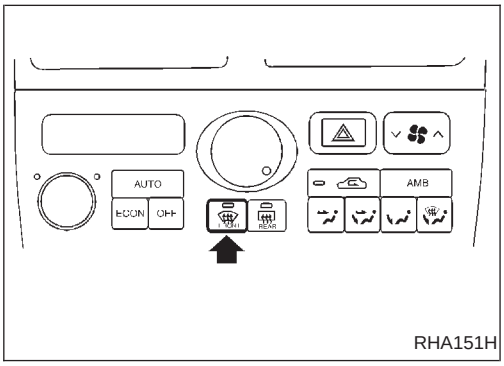

RHA151H

### 5. Check defroster

1) Press DEFROSTER switch.
2) Check that recirculation is canceled.
   The discharge air should be coming only from the defrost vents.
3) Confirm that the compressor clutch is engaged (visual inspection).
   The display should indicate AUTO, MANUAL, and defrost ( ).

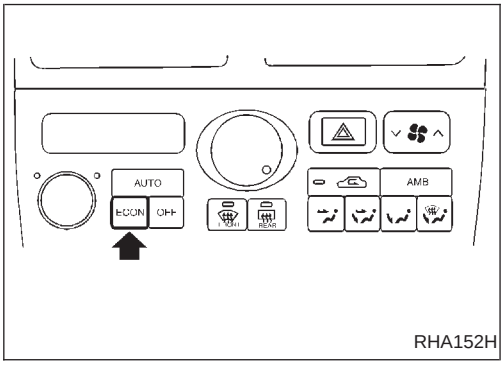

RHA152H

### 6. Check ECON mode

1) Press ECON switch once.
   Defrost should be canceled.
   Discharge air outlet will depend on ambient, in-vehicle, and set temperatures.
   Confirm that the compressor clutch is engaged (visual inspection).
   Display should indicate ECON, AUTO (no MANUAL).
2) Press ECON switch once more.
   Display should indicate AUTO (not ECON).
   Confirm that the compressor clutch is not engaged (visual inspection).

## Operational Check (Cont'd)

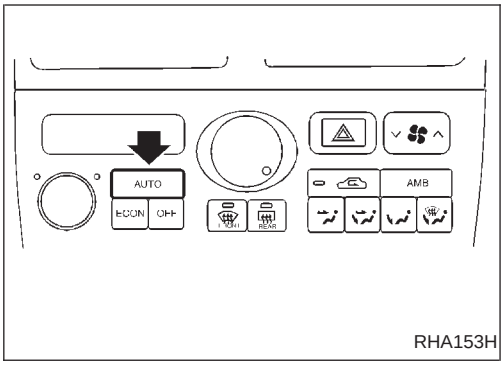

RHA153H

### 7. Check AUTO mode

1) Press AUTO switch.
2) Confirm that the compressor clutch engages (audio or visual inspection).
   Display should indicate AUTO (no ECON, no MANUAL).
   (Discharge air will depend on ambient, in-vehicle, and set temperatures.)

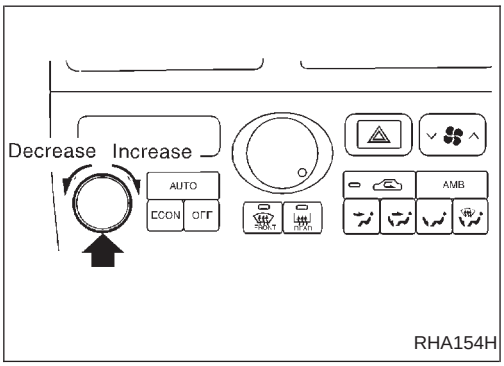

RHA154H

### 8. Check temperature decrease and increase

1) Turn temperature switch counterclockwise until 18°C (65°F) is displayed.
2) Check for cold air at discharge air outlets.
3) Turn temperature switch clockwise until 32°C (85°F) is displayed.
4) Listen for changes in blower speed as set temperature changes.
5) Check for hot air at discharge air outlets.

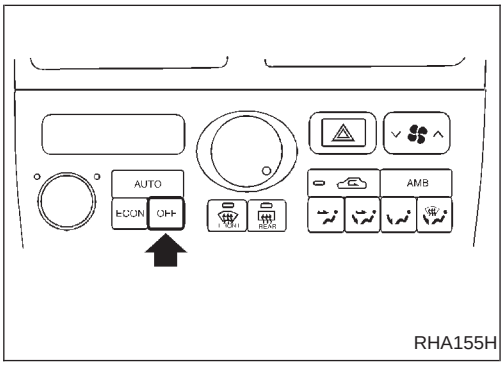

RHA155H

### 9. Check memory function

1) Press OFF switch.
2) Turn the ignition switch OFF.
3) Wait 15 seconds.
4) Turn the ignition switch ON.
5) Press the AUTO switch.
6) Confirm that the set temperature remained at 32°C (85°F).

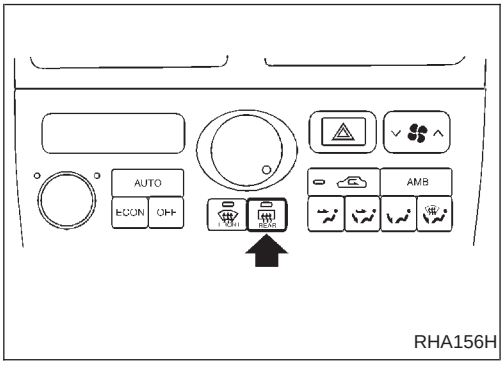

RHA156H

### 10. Check rear window defogger

1) Press rear window defogger switch.
   Rear window defogger indicator should come ON.

## Operational Check (Cont'd)

**PROCEDURE (With navigation system):**

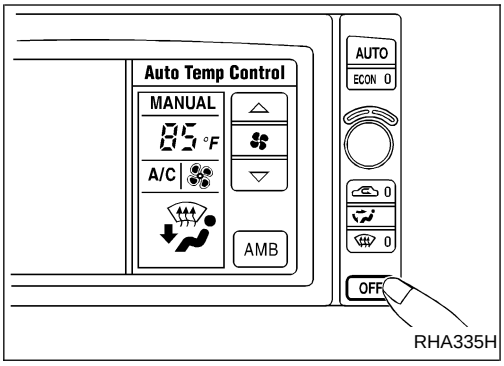

RHA335H

### 1. Check Memory Function

1. Set the temperature 85°F or 32°C.
2. Press OFF switch.
3. Turn the ignition off.
4. Turn the ignition on.
5. Press the AUTO switch.
6. Confirm that the set temperature remains at previous temperature.
7. Press OFF switch.

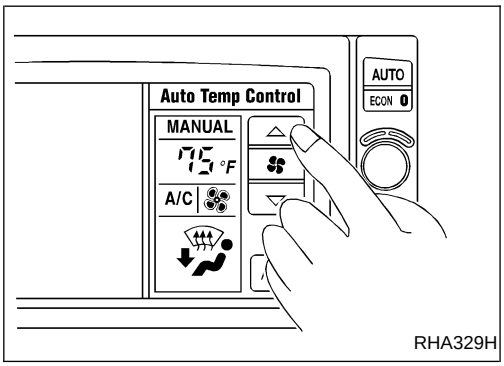

RHA329H

### 2. Check Blower

1. Press fan switch (up side) one time.
   Blower should operate on low speed.
   The fan symbol should have one blade lit .
2. Press fan switch (up side) one more time, and continue checking blower speed and fan symbol until all speeds are checked.
3. Leave blower on MAX speed .

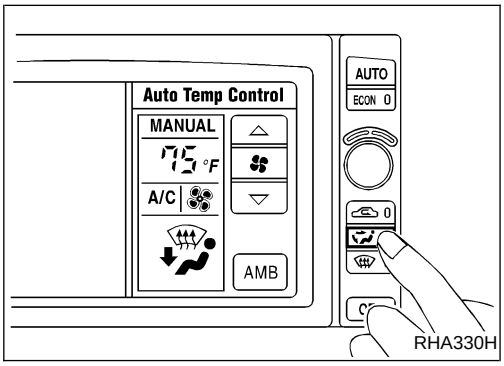

RHA330H

### 3. Check Discharge Air

1. Press MODE switch four times and DEF button.
2. Each position indicator should change shape.

**Discharge air flow**

| Switch mode | Air outlet/distribution | | | | |
|---|---|---|---|---|---|
| | Face | Front foot | Rear foot | DEF | Rear vent |
| | 80% | – | – | – | 20% |
| | 50% | 24% | 13% | – | 13% |
| 2 | 25% | 45% | 25% | – | – |
| | – | 46% | 30% | 24% | – |
| | – | 37% | 23% | 40% | – |
| | – | – | – | 100% | – |

RHA167F

3. Confirm that discharge air comes out according to the air distribution table at left.
   Refer to "Discharge Air Flow" HA-27.

**NOTE:**

Confirm that the compressor clutch is engaged (visual inspection) and intake door position is at FRESH when the DEF is selected.
Intake door position is checked in the next step.

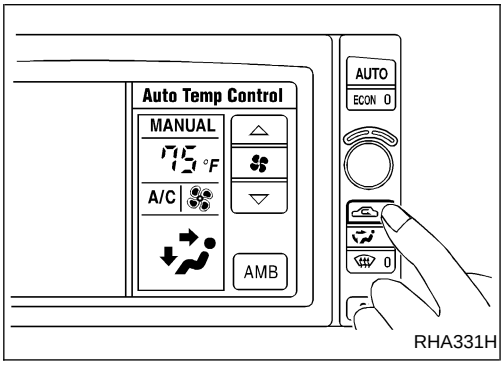

RHA331H

### 4. Check Recirculation

1. Press REC switch.
   Recirculation indicator should illuminate.
2. Listen for intake door position change (you should hear blower sound change slightly).

## Operational Check (Cont'd)

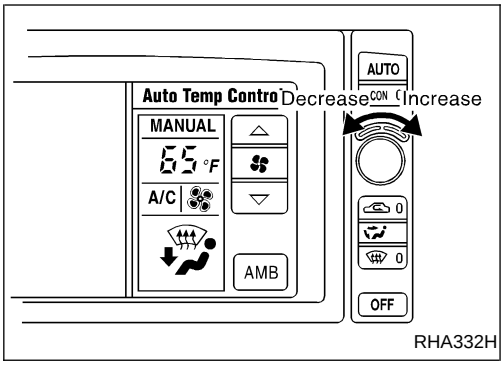

RHA332H

### 5. Check Temperature Decrease

- Turn the temperature dial counterclockwise until 18°C (65°F) is displayed.
- Check for cold air at discharge air outlets.

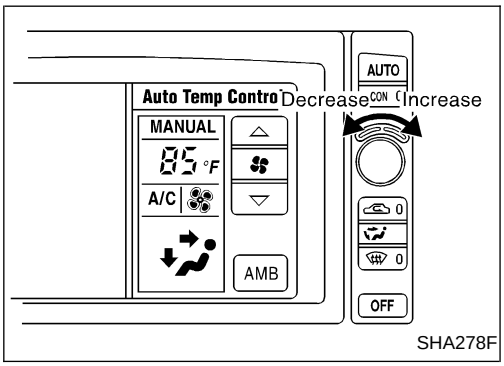

SHA278F

### 6. Check Temperature Increase

- Turn the temperature dial clockwise until 32°C (85°F) is displayed.
- Check for hot air at discharge air outlets.

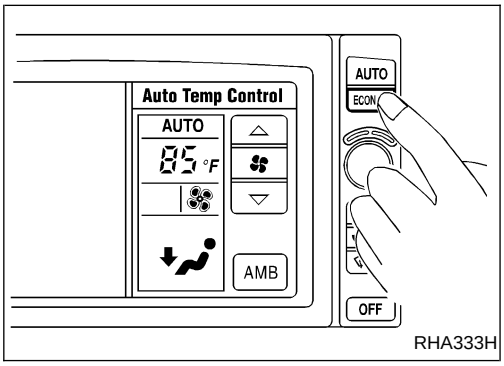

RHA333H

### 7. Check ECON (Economy) Mode

1. Set the temperature 75°F or 25°C.
2. Press ECON switch.
3. Display should indicate ECON (no AUTO).
   Confirm that the compressor clutch is not engaged (visual inspection).
   (Discharge air and blower speed will depend on ambient, in-vehicle and set temperatures.)

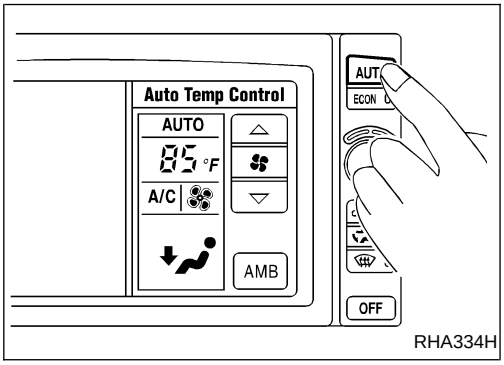

RHA334H

### 8. Check AUTO Mode

1. Press AUTO switch.
2. Display should indicate AUTO (no ECON).
   Confirm that the compressor clutch engages (audio or visual inspection).
   (Discharge air and blower speed will depend on ambient, in-vehicle and set temperatures.)

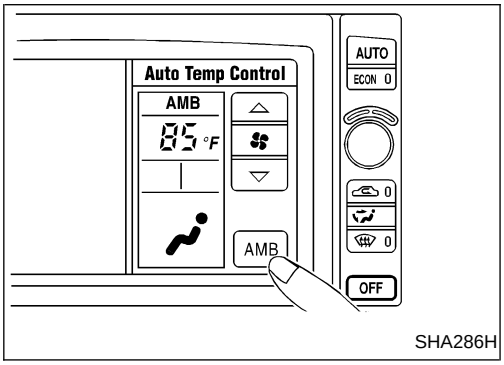

SHA286H

### 9. Check Ambient Display

1. Press AUTO switch.
2. Press AMB switch.
3. Display should show the outside (ambient) temperature for approximately 5 seconds.

## Operational Check (Cont'd)

If all operational check are OK (symptom can not be duplicated), go to "Incident Simulation Tests" (GI section) and perform tests as outlined to simulate driving conditions environment. If symptom appears, refer to "Symptom Chart" (HA-36) and perform applicable trouble diagnosis procedures.

# Symptom Chart

## DIAGNOSTIC TABLE

| PROCEDURE | Self-diagnosis | | | | | | Preliminary Check | | | | | | | | Diagnostic Procedure | | | | | | | | | | |
|---|---|---|---|---|---|---|---|---|---|---|---|---|---|---|---|---|---|---|---|---|---|---|---|---|---|
| SYMPTOM / DIAGNOSTIC ITEM AND REFERENCE PAGE | STEP 1 (HA-38)*1 (HA-45)*2 | STEP 2 (HA-39)*1 (HA-46)*2 | STEP 3 (HA-40) | STEP 4 (HA-41) | STEP 5 (HA-41)*1 (HA-49)*2 | AUXILIARY MECHANISM (HA-43) | Preliminary Check 1 (HA-55) | Preliminary Check 2 (HA-56) | Preliminary Check 3 (HA-57) | Preliminary Check 4 (HA-58) | Preliminary Check 5 (HA-59) | Preliminary Check 6 (HA-60) | Preliminary Check 7 (HA-61) | Preliminary Check 8 (HA-62) | Self-diagnosis circuit (HA-88) | Multiplex communication circuit (HA-89)*2 | Ambient sensor circuit (HA-90) | In-vehicle sensor circuit (HA-93) | Intake sensor circuit (HA-96) | Sunload sensor circuit (HA-97) | Intake door motor circuit (HA-109) | LAN system circuit (HA-106) | Blower motor circuit (HA-113) | Magnet clutch circuit (HA-118) | Rear vent door motor circuit (HA-122) |
| Air outlet does not change. | ❶ | ❷ | ○ | ○ | ○ | | ❸ | | | | | | | | ○ | | ○ | ○ | ○ | ○ | ○ | ○ | ○ | ○ | ○ |
| Intake door does not change. | ❶ | ❷ | ○ | ○ | ○ | | | ❸ | | | | | | | ○ | | ○ | ○ | ○ | ○ | ○ | ○ | ○ | ○ | |
| Insufficient cooling | ○ | ○ | ○ | ○ | ○ | ○ | ○ | ○ | ❶ | | ○ | ○ | ○ | | ○ | | ○ | ○ | ○ | ○ | ○ | ○ | ○ | ○ | ○ |
| Insufficient heating | ○ | ○ | ○ | ○ | ○ | ○ | ○ | ○ | | ❶ | ○ | | ○ | | ○ | | ○ | ○ | ○ | ○ | ○ | ○ | ○ | ○ | |
| Blower motor operation is malfunctioning. | ❶ | ❷ | | ○ | ○ | | | | | | ❸ | | | | ○ | | ○ | ○ | ○ | ○ | ○ | ○ | ○ | ○ | |
| Magnet clutch does not engage. | ❶ | ❷ | | ○ | ○ | | | | | | | ❸ | | | ○ | | ○ | ○ | ○ | ○ | ○ | ○ | ○ | ○ | |
| Discharged air temperature does not change. | ❶ | ❷ | | ○ | ○ | | | | | | | | ❸ | | ○ | | ○ | ○ | ○ | ○ | ○ | ○ | ○ | ○ | |
| Noise | | | | | | | | | | | | | | ❶ | | | | | | | | | | | |
| Mode door motor does not operate normally. | ❶ | ❷ | ❸ | ❹ | ○ | | ○ | | | | | | | | ○ | | ○ | ○ | ○ | ○ | ○ | ❺ | ○ | ○ | |
| Air mix door motor does not operate normally. | ❶ | ❷ | | ❸ | ○ | | | | | | | | ○ | | ○ | | ○ | ○ | ○ | ○ | ○ | ❹ | ○ | ○ | ○ |
| Bi-level door motor does not operate normally. | ❶ | ❷ | | ❸ | ○ | | | | | | | | | | ○ | | ○ | ○ | ○ | ○ | ○ | ❹ | ○ | ○ | ○ |
| Intake door motor does not operate normally. | ❶ | ❷ | ❸ | ❹ | ○ | | | ○ | | | | | | | ○ | | ○ | ○ | ○ | ○ | ❺ | ○ | ○ | ○ | ○ |
| Blower motor operation is malfunctioning under out of Starting Fan Speed Control. | ❶ | ❷ | | ❸ | ○ | | | | | | ○ | | | | ○ | | ○ | ○ | ○ | ○ | ○ | ○ | ❹ | ○ | ○ |
| Magnet clutch does not operate after performing Preliminary Check 6. | ❶ | ❷ | | ❸ | ○ | | | | | | | ○ | | | | | ○ | | | ○ | | | | ❹ | |
| Rear ventilator door motor does not operate normally. | ❶ | ❷ | | ❸ | | | | | | | | | | | ○ | | ○ | ○ | ○ | ○ | ○ | ○ | ○ | ○ | ❹ |
| Self-diagnosis cannot be performed. | | | | | | | | | | | | | | | ❶ | | | | | | | | | | |
| Memory function does not operate. | ❶ | ❷ | | | | | | | | | | | | | | | | | | | | | | | |
| ECON mode does not operate. | ❶ | ❷ | | | | | | | | | | | | | | | | | | | | | | | |
| Multiplex communication error. | ❶ | ❷ | | | ❸ | | | | | | | | | | ❹ | ❹ | | | | | | | | | |

❶, ❷: The number means checking order.
○: As for the order of inspection, refer to each flow chart. (It depends on malfunctioning portion.)
*1: Without navigation system
*2: With navigation system

## Self-diagnosis

### INTRODUCTION AND GENERAL DESCRIPTION

The self-diagnostic system diagnoses sensors, door motors, blower motor and multiplex communication errors, etc. by system line. Refer to applicable sections (items) for details. Shifting from normal control to the self-diagnostic system is done as follows. Start the engine (turn the ignition switch from “OFF” to “ON”). And press OFF switch for at least 5 seconds. The OFF switch must be pressed within 10 seconds after starting the engine (ignition switch is turned “ON”). This system will be canceled by either pressing AUTO switch or turning ignition switch “OFF”. Shifting from one step to another is accomplished by means of rotating temperature control switch, as required.
Additionally shifting from STEP 5 to AUXILIARY MECHANISM is accomplished by means of pushing ⌃ (Blower) switch.

**Without Navigation System**

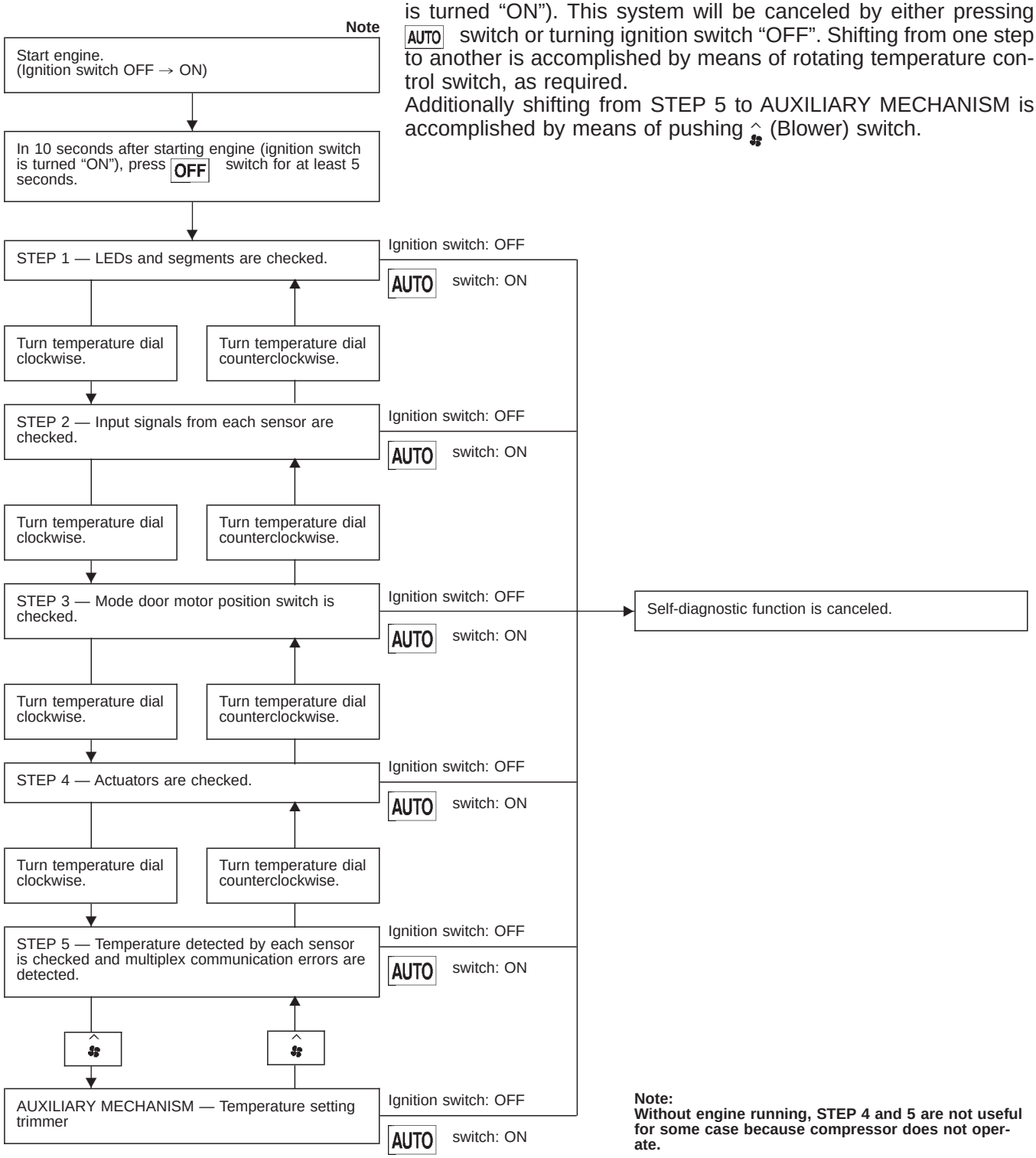


**Note:**
**Without engine running, STEP 4 and 5 are not useful for some case because compressor does not operate.**

## Self-diagnosis (Cont'd)

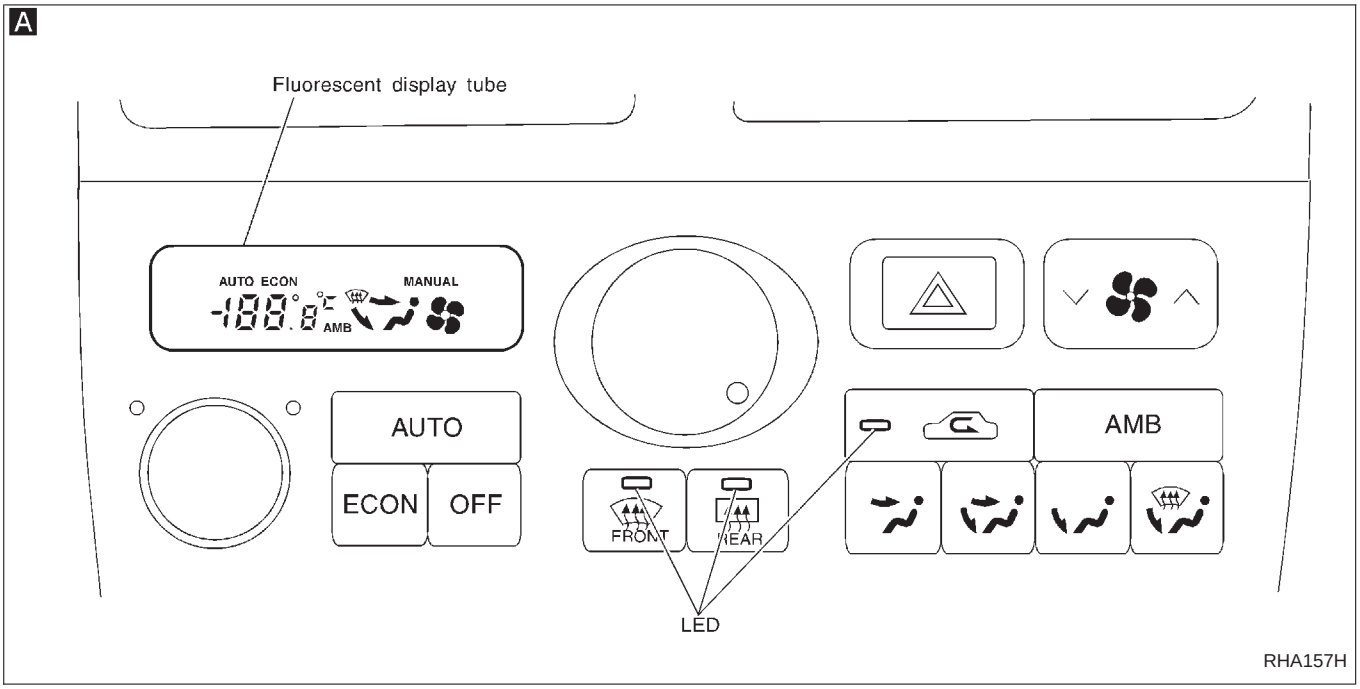


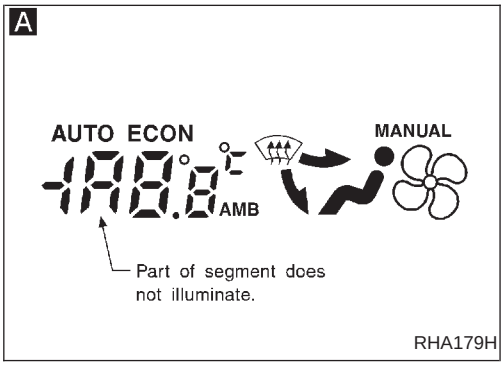


### STEP-BY-STEP PROCEDURE

Turn ignition switch ON.

↓

Set in self-diagnostic mode. Within 10 seconds after starting engine (ignition switch is turned "ON".), press OFF switch for at least 5 seconds.

↓

A

STEP 1 - LEDs AND SEGMENT ARE CHECKED.
Do all LEDs and segments illuminate?

- No → Malfunctioning OFF switch, LED or fluorescent display tube. Replace front control unit.
- Yes ↓

Turn temperature dial clockwise.

↓

Advance to self-diagnosis STEP 2?

- No → Malfunctioning temperature dial. Replace front control unit.
- Yes ↓

Turn temperature dial counterclockwise.

↓

Return to self-diagnosis STEP 1?

- No → Malfunctioning temperature dial. Replace front control unit.
- Yes ↓

Turn temperature dial clockwise.

↓

Ⓐ
(Go to next page.)

## Self-diagnosis (Cont'd)

**B Display (when all sensors are in good order)**

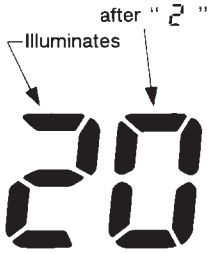


RHA970D

**C Display (when sensor malfunctions)**

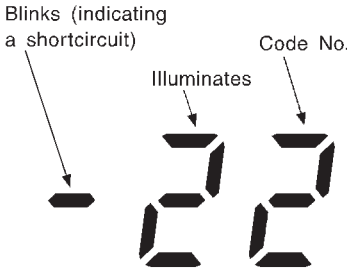


RHA392G

**C**

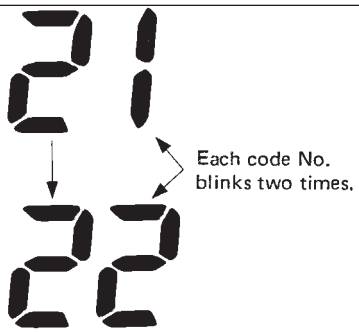


RHA501A

Ⓐ

**B**

STEP 2 - SENSOR CIRCUITS ARE CHECKED FOR OPEN OR SHORT CIRCUIT.
Does code No. 20 appear on the display?

No → **C**

Yes → Turn temperature dial clockwise.

Ⓑ
(Go to next page.)

**C**

Refer to the following chart for malfunctioning code No.
(If two or more sensors malfunction, corresponding code Nos. blink respectively two times.)

| Code No. | Malfunctioning sensor (including circuits) | Reference page |
|---|---|---|
| 21 | Ambient sensor | HA-90 |
| -21 | | |
| 22 | In-vehicle sensor | HA-93 |
| -22 | | |
| 24 | Intake sensor | HA-96 |
| -24 | | |
| 25 | Sunload sensor*1 | HA-97 |
| -25 | | |
| 26 | Air mix door motor PBR | HA-102 |
| -26 | | |
| 27 | Bi-level door motor PBR | HA-104 |
| -27 | | |

***1: Conduct self-diagnosis STEP 2 under sunshine.**
When conducting indoors, aim a light (more than 60W) at sunload sensor, otherwise Code No. 25 will indicate despite that sunload sensor is functioning properly.

## Self-diagnosis (Cont'd)

**D Display (when all doors are in good order)**

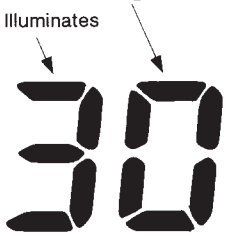


RHA869D

**E Display (when a door is out of order)**

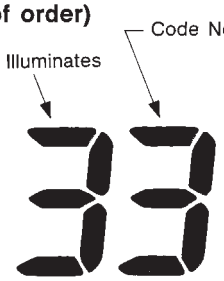


RHA497A

**E**

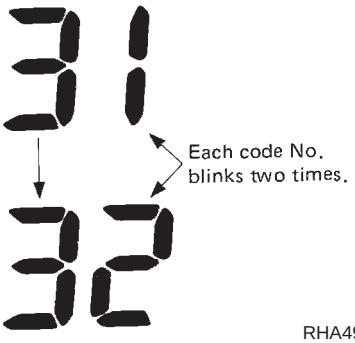


RHA498A

Ⓑ

**D**

STEP 3 - MODE DOOR AND INTAKE DOOR POSITIONS ARE CHECKED.
Does code No. 30 appear on the display?

No → **E**

Yes → Turn temperature dial clockwise.

Ⓒ
(Go to next page.)

**E**

Mode or (and) intake door motor position switch(es) is (are) malfunctioning.
(If two or more mode or intake doors are out of order, corresponding code numbers blink respectively two times.)

| Code No.*1 *2 | Mode or intake door position | Reference page |
|---|---|---|
| 31 | VENT | HA-100 |
| 32 | B/L | |
| 33 | B/L 2 | |
| 34 | FOOT | |
| 35 | FOOT/DEF | |
| 36 | DEF | |
| 37 | FRE | HA-109 |
| 38 | 20% FRE | |
| 39 | REC | |

*1: If mode door motor harness connector is disconnected, the following display pattern will appear.
→ 31 → 32 → 33 → 34 → 35 → 36 ⌐

*2: If intake door motor harness connector is disconnected, the following display pattern will appear.
→ 37 → 38 → 39 ⌐

## Self-diagnosis (Cont'd)

**F**

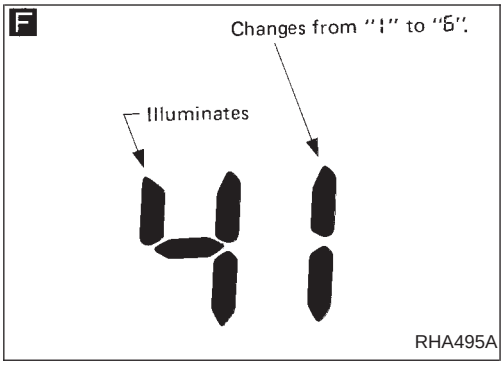


RHA495A

**G** **Discharge air flow**

| | Air outlet/distribution | | | | |
|---|---|---|---|---|---|
| Switch mode | Face | Front foot | Rear foot | DEF | Rear vent |
| | 80% | – | – | – | 20% |
| | 50% | 24% | 13% | – | 13% |
| 2 | 25% | 45% | 25% | – | – |
| | – | 46% | 30% | 24% | – |
| | – | 37% | 23% | 40% | – |
| | – | – | – | 100% | – |

RHA167F

Ⓒ

**F**

STEP 4 - OPERATION OF EACH ACTUATOR IS CHECKED.
Engine running.
Press DEF switch, code No. of each actuator test is indicated on the display.

**G**

Refer to the following chart and confirm discharge air flow, air temperature, blower motor voltage and compressor operation. **Checks must be made visually, by listening to any noise, or by touching air outlets with your hand, etc. for improper operation.**

| Code No. | Actuator test pattern | | | | | | |
|---|---|---|---|---|---|---|---|
| | Mode door | Intake door | Air mix door | Blower motor | Compressor | Bi-level door | Rear vent door |
| 41 | VENT | REC | Full Cold | 5V | ON | Open | Open |
| 42 | VENT | REC | Full Cold | 5V | ON | Open | Closed |
| 43 | B/L | REC | Full Cold | 12V | ON | Open | Closed |
| 44 | B/L | 20% FRE | Full Hot | 7 - 9V | OFF | Closed | Closed |
| 45 | B/L 2 | 20% FRE | Full Hot | 7 - 9V | OFF | Closed | Closed |
| 46 | FOOT | FRE | Full Hot | 7 - 9V | OFF | Closed | Closed |
| 47 | F/D | FRE | Full Hot | 7 - 9V | ON | Closed | Closed |
| 48 | DEF | FRE | Full Hot | 12V | ON | Closed | Closed |

NG →

- Air outlet does not change.
  Go to preliminary check 1 (HA-55).
- Intake door does not change.
  Go to preliminary check 2 (HA-56).
- Discharge air temperature does not change.
  Go to preliminary check 7 (HA-61).
- Magnet clutch does not engage.
  Go to preliminary check 6 (HA-60).
- Blower motor operation is malfunctioning.
  Go to preliminary check 5 (HA-59).
- Bi-level door motor does not operate normally.
  Go to "DIAGNOSTIC PROCEDURE", "Bi-level Door Motor Circuit", HA-104.
- Rear vent door motor does not operate normally.
  Go to "DIAGNOSTIC PROCEDURE", "Rear Vent Door Motor Circuit", HA-122.

OK

Turn temperature dial clockwise.

**H**

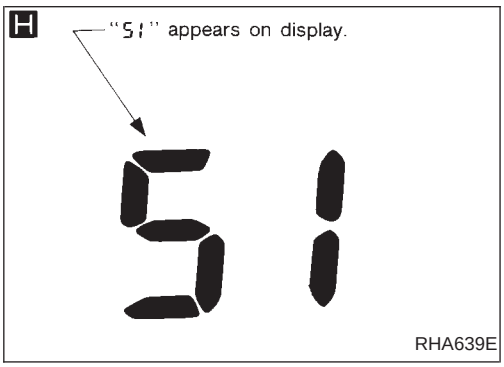


RHA639E

**H**

STEP 5 - TEMPERATURE OF EACH SENSOR IS CHECKED.
Code No. 51 appears on the display.

Ⓓ

(Go to next page.)

## Self-diagnosis (Cont'd)

**I**

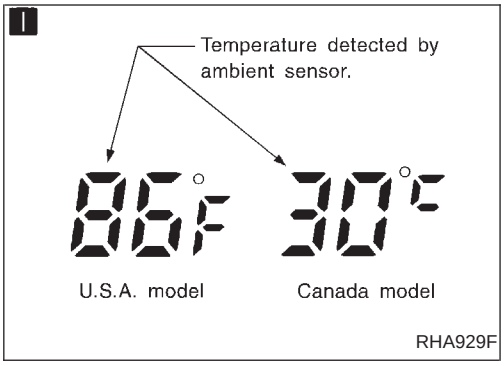


**J**

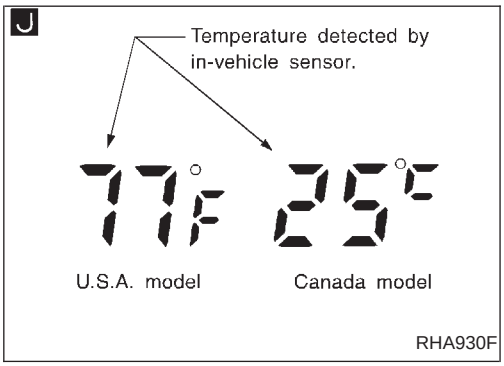


**K**

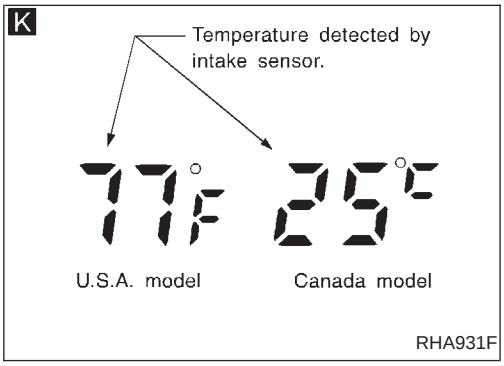


**L**

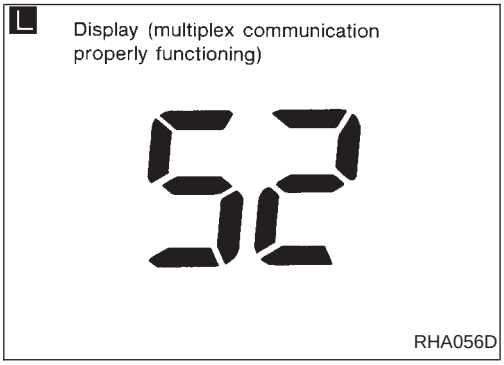


Ⓓ

**I** — Note

Press (DEF) switch first time, temperature detected by ambient sensor is indicated on the display.

- NG → Go to Ambient Sensor Circuit (HA-90).
- OK ↓

**J** — Note

Press (DEF) switch second time, temperature detected by in-vehicle sensor is indicated on the display.

- NG → Go to In-vehicle Sensor Circuit (HA-93).
- OK ↓

**K** — Note

Press (DEF) switch third time, temperature detected by intake sensor is indicated on the display.

- NG → Go to Intake Sensor Circuit (HA-96).
- OK ↓

Press (REC) switch. Code No. 52 is indicated on the display.

↓

**L**

Multiplex communication error between control unit and auto amplifier is detected. (If plural errors occur, the display of each error will blink two times for 0.5 second intervals.)

| Display | Signal direction |
|---|---|
| 52 | In good order |
| 52 blinks two times | A/C control unit → auto amplifier |
| 52 blinks two times | Auto amplifier → A/C control unit |

- NG → Disconnect battery for about 1 minute to cancel the communication memory. Reconnect battery. Set up self-diagnosis STEP 5. Check multiplex communication error.
  - OK → Turn ignition switch OFF or AUTO switch ON.
  - NG → Go to Self-diagnosis Circuit (HA-88).
- OK ↓

Turn ignition switch OFF or AUTO switch ON.

↓

END

**Note:**
**If temperature shown on display greatly differs from actual temperature, check sensor circuit first, then inspect sensor.**

## Self-diagnosis (Cont'd)

### AUXILIARY MECHANISM: Temperature setting trimmer

This trimmer compensates for differences between temperature setting (displayed digitally) and temperature felt by driver in a range of ±3°C (±6°F).

Operating procedures for this trimmer are as follows:

Starting with STEP 5 under "Self-diagnostic mode", press ^ (Blower) switch to set air conditioning system in auxiliary mode. Then, set temperature dial to desired temperature. Temperature will change at a rate of 0.5°C (1°F) each time a switch is turned.

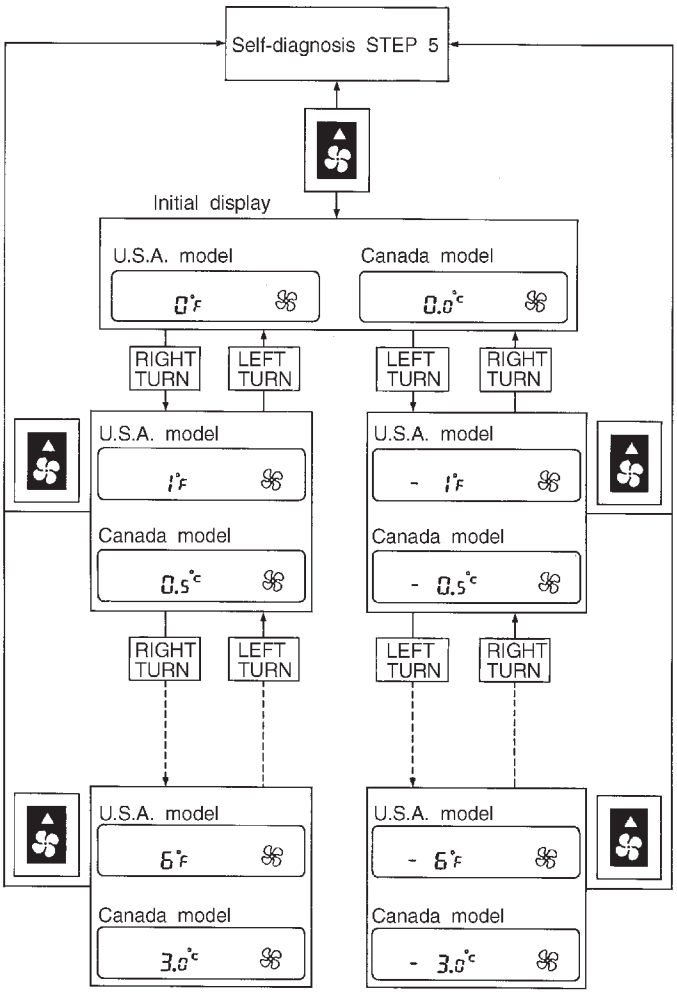


SHA733E

**When battery cable is disconnected, trimmer operation is canceled and temperature set becomes that of initial condition, i.e. 0°C (0°F).**

## Self-diagnosis (Cont'd)

### INTRODUCTION AND GENERAL DESCRIPTION

The self-diagnostic system diagnoses sensors, door motors, blower motor, etc. by system line. Refer to applicable sections (items) for details. Shifting from normal control to the self-diagnostic system is accomplished by starting the engine (turning the ignition switch from "OFF" to "ON") and pressing " OFF " switch for at least 5 seconds. The " OFF " switch must be pressed within 10 seconds after starting the engine (ignition switch is turned "ON"). This system will be canceled by either pressing AUTO (AUTO) switch or turning the ignition switch "OFF". Shifting from one step to another is accomplished by means of turning temperature dial, as required. Additionally shifting from STEP 5 to AUXILIARY MECHANISM is accomplished by means of pushing (fan) UP switch.

**With navigation system**

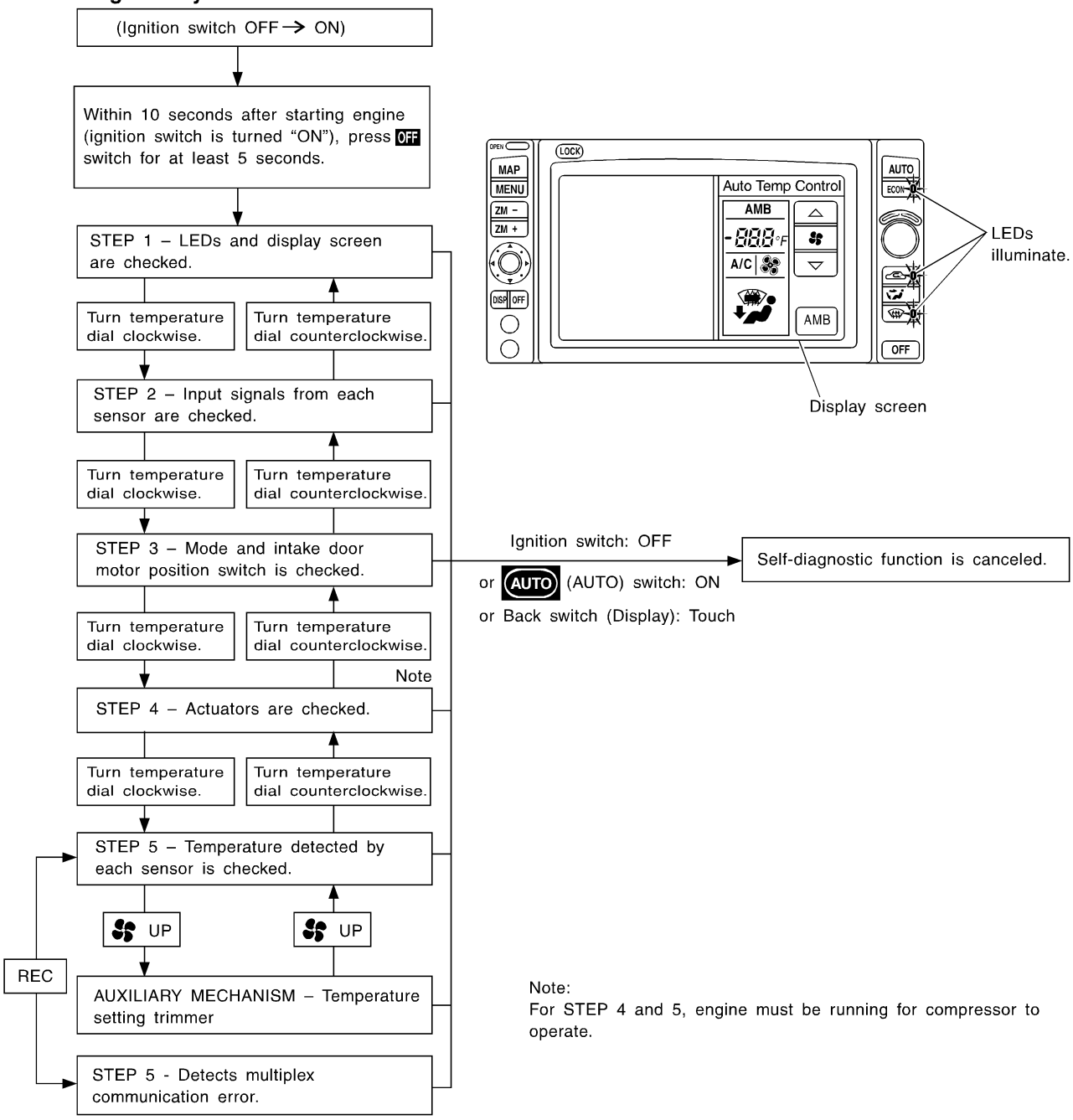

## STEP-BY-STEP PROCEDURE

| 1 | SET IN SELF-DIAGNOSTIC MODE |
|---|---|
| 1. Turn ignition switch ON.<br>2. Set in self-diagnostic mode as follows. Within 10 seconds after starting engine (ignition switch is turned "ON".), press OFF switch for at least 5 seconds. | |
| ▶ | GO TO 2. |

| 2 | STEP 1 - ALL LEDs AND DISPLAY SCREEN ARE CHECKED |
|---|---|
| When switch's LED and display are functioning properly in STEP-1, LED and display will come on. | |

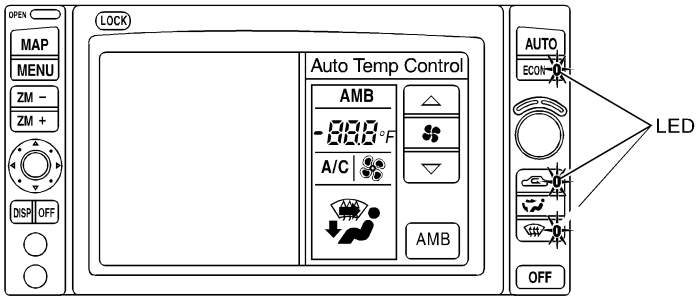


RHA860H

**OK or NG**

| | |
|---|---|
| OK ▶ | GO TO 3. |
| NG ▶ | Malfunctioning OFF switch, LED or fluorescent display tube.<br>Go to "Main Power Supply and Ground Circuit Check", HA-86. |

| 3 | VERIFY ADVANCE TO SELF-DIAGNOSIS STEP 2 |
|---|---|
| 1. Turn temperature dial clockwise.<br>2. Does advance to self-diagnosis STEP 2? | |
| **Yes or No** | |
| Yes ▶ | GO TO 4. |
| No ▶ | Malfunctioning temperature dial.<br>Check Display & NAVI control unit. |

| 4 | VERIFY RETURN TO SELF-DIAGNOSIS STEP 1 |
|---|---|
| 1. Turn temperature dial counterclockwise.<br>2. Does return to self-diagnosis STEP 1? | |
| **Yes or No** | |
| Yes ▶ | GO TO 5. |
| No ▶ | Malfunctioning temperature dial.<br>Check Display & NAVI control unit. |

| 5 | STEP 2 - SENSOR CIRCUITS ARE CHECKED FOR OPEN OR SHORT CIRCUIT |
|---|---|

Turn temperature dial clockwise.
Does code No. 20 appear on the display?

**Display (when all sensors are in good order)**

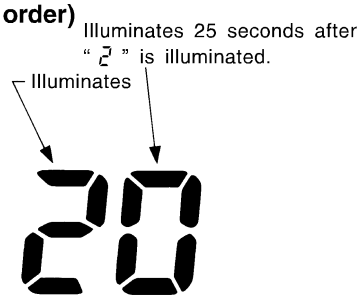


RHA970DB

**Yes or No**

| | | |
|---|---|---|
| Yes | ▶ | GO TO 6. |
| No | ▶ | GO TO 14. |

| 6 | STEP 3 - MODE DOOR AND INTAKE DOOR POSITIONS ARE CHECKED |
|---|---|

Turn temperature dial clockwise.
Does code No. 30 appear on the display?

**Display (when all doors are in good order)**

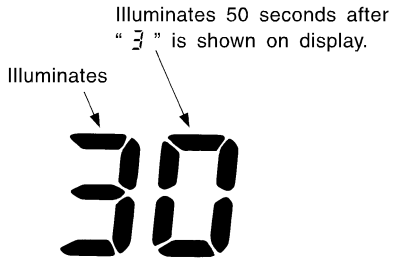


RHA869DD

**Yes or No**

| | | |
|---|---|---|
| Yes | ▶ | GO TO 7. |
| No | ▶ | GO TO 15. |

## Self-diagnosis (Cont'd)

| 7 | STEP 4 - OPERATION OF EACH ACTUATOR IS CHECKED |
|---|---|
| Turn temperature dial clockwise.<br>Engine running.<br>Press DEF switch, code No. of each actuator test is indicated on the display.<br> 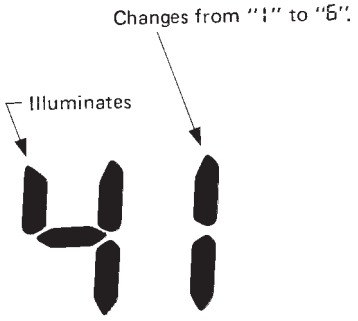 <br><br>RHA495A | |
| ▶ | GO TO 8. |

| 8 | CHECK ACTUATORS |
|---|---|

Refer to the following chart and confirm discharge air flow, air temperature, blower motor voltage and compressor operation.
**Checks must be made visually, by listening to any noise, or by touching air outlets with your hand, etc. for improper operation.**

| Code No. | Actuator test pattern | | | | | | |
|---|---|---|---|---|---|---|---|
| | Mode door | Intake door | Air mix door | Blower motor | Com-pres-sor | Bi-level door | Rear vent door |
| 41 | VENT | REC | Full cold | 5V | ON | Open | Open |
| 42 | VENT | REC | Full cold | 5V | ON | Open | Closed |
| 43 | B/L | REC | Full cold | 12V | ON | Open | Closed |
| 44 | B/L | 20% FRE | Full hot | 7 - 9V | OFF | Closed | Closed |
| 45 | B/L2 | 20% FRE | Full hot | 7 - 9V | OFF | Closed | Closed |
| 46 | FOOT | FRE | Full hot | 7 - 9V | OFF | Closed | Closed |
| 47 | D/F | FRE | Full hot | 7 - 9V | ON | Closed | Closed |
| 48 | DEF | FRE | Full hot | 12V | ON | Closed | Closed |

MTBL0536

**Discharge air flow**

| Switch mode | Air outlet/distribution | | | | |
|---|---|---|---|---|---|
| | Face | Front foot | Rear foot | DEF | Rear vent |
| | 80% | – | – | – | 20% |
| | 50% | 24% | 13% | – | 13% |
| 2 | 25% | 45% | 25% | – | – |
| | – | 46% | 30% | 24% | – |
| | – | 37% | 23% | 40% | – |
| | – | – | – | 100% | – |

RHA167F

**OK or NG**

| | | |
|---|---|---|
| OK | ▶ | GO TO 9. |
| NG | ▶ | • Air outlet does not change.<br>Go to "Mode Door Motor" (HA-100).<br>• Discharge air temperature does not change.<br>Go to "Air Mix Door Motor" (HA-102).<br>• Intake door does not change.<br>Go to "Intake Door Motor" (HA-109).<br>• Blower motor operation is malfunctioning.<br>Go to "Blower Motor" (HA-113).<br>• Magnet clutch does not engage.<br>Go to "Magnet Clutch" (HA-118). |

| 9 | STEP 5 - TEMPERATURE OF EACH SENSOR IS CHECKED |
|---|---|
| Turn temperature dial clockwise.<br>Code No. 5 appears on the display.<br> 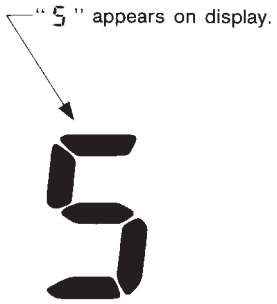 <br><br>RHA492A | |
| ▶ | GO TO 10. |

| 10 | CHECK AMBIENT SENSOR |
|---|---|
| Press (DEF) switch one time, temperature detected by ambient sensor is indicated on the display.<br>ECON shown in display indicates negative temperature reading.<br>**NOTE:**<br>If temperature shown on display greatly differs from actual temperature, check sensor circuit first, then inspect sensor.<br> 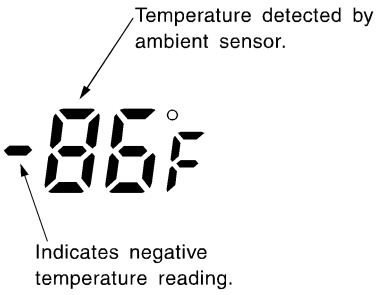 <br><br>RHA861H<br>**OK or NG** | |
| OK ▶ | GO TO 11. |
| NG ▶ | Go to Ambient Sensor Circuit HA-90. |

| 11 | CHECK IN-VEHICLE SENSOR |
|---|---|

Press (DEF) switch the second time, temperature detected by in-vehicle sensor is indicated on the display screen.
ECON shown in display indicates negative temperature reading.

**NOTE:**

If temperature shown on display greatly differs from actual temperature, check sensor circuit first, then inspect sensor.

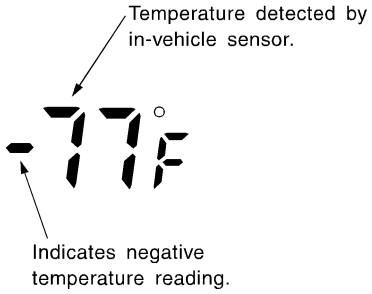


RHA862H

**OK or NG**

| | | |
|---|---|---|
| OK | ▶ | GO TO 12. |
| NG | ▶ | Go to In-vehicle Sensor Circuit HA-93. |

| 12 | CHECK INTAKE SENSOR |
|---|---|

Press (DEF) switch the third time, temperature detected by intake sensor is indicated on the display.

**NOTE:**

If temperature shown on display greatly differs from actual temperature, check sensor circuit first, then inspect sensor.

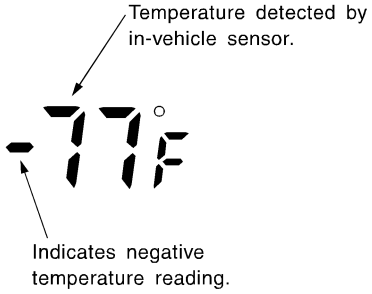


RHA862HA

**OK or NG**

| | | |
|---|---|---|
| OK | ▶ | GO TO 13. |
| NG | ▶ | Go to Intake Sensor Circuit HA-96. |

## Self-diagnosis (Cont'd)

| 13 | DETECTS MULTIPLEX COMMUNICATION ERROR |
|---|---|

Press REC switch.
Does code No. 52 appears on the display

| Display | Signal direction |
|---|---|
| 52 | In good order |
| 52 | Display & NAVI control unit → Auto amp. |
| 52 | Auto amp. → Display & NAVI control unit |

MTBL0509

**Yes or No**

| | | |
|---|---|---|
| Yes | ▶ | INSPECTION END |
| No | ▶ | 1. Go to "Multiplex communication Circuit", HA-89.<br>2. Go to "OPERATIONAL CHECK", HA-33.<br>Confirm that A/C system is in good order. |

| 14 | CHECK MALFUNCTIONING SENSOR |
|---|---|

Refer to the following chart for malfunctioning code No.
(If two or more sensors malfunction, corresponding code Nos. blink respectively two times.)

| Code No. | Malfunctioning sensor (including circuits) | Reference page |
|---|---|---|
| 21 | Ambient sensor | *2 |
| -21 | | |
| 22 | In-vehicle sensor | *3 |
| -22 | | |
| 24 | Intake sensor | *4 |
| -24 | | |
| 25 | Sunload sensor*1 | *5 |
| -25 | | |
| 26 | Air mix door motor (LCU) PBR | *6 |
| -26 | | |
| 27 | Bi-level door motor PBR | *7 |
| -27 | | |

MTBL0534

***1: Conduct self-diagnosis STEP 2 under sunshine.**
When conducting indoors, aim a light (more than 60W) at sunload sensor, otherwise Code No. 25 will indicate despite that sunload sensor is functioning properly.
*2: HA-92.
*3: HA-95.
*4: HA-97.
*5: HA-99.
*6: HA-102.
*7: HA-104.

**Display (when sensor malfunctions)**

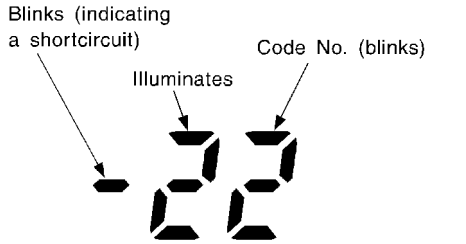


RHA455G

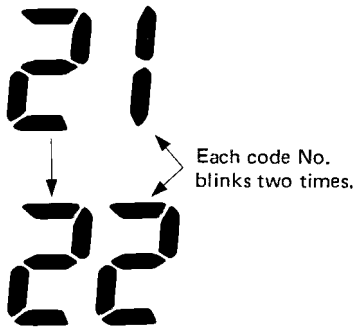


RHA501A

| ▶ | INSPECTION END |
|---|---|

| 15 | CHECK MALFUNCTIONING DOOR MOTOR POSITION SWITCH |
|---|---|

Mode or (and) intake door motor position switch(es) is (are) malfunctioning.
(If two or more mode or intake doors are out of order, corresponding code numbers blink respectively two times.)

| Code No. *1 *2 | Mode or intake door position | | Reference page |
|---|---|---|---|
| 31 | VENT | Mode door motor | *3 |
| 32 | B/L | | |
| 33 | B/L 2 | | |
| 34 | FOOT | | |
| 35 | D/F | | |
| 36 | DEF | | |
| 37 | FRE | Intake door motor | *4 |
| 38 | 20% FRE | | |
| 39 | REC | | |

MTBL0535

*1: If mode door motor harness connector is disconnected, the following display pattern will appear.
31 → 32 → 33 → 34 → 35 → 36 → Return to 31
*2: If intake door motor harness connector is disconnected, the following display pattern will appear.
37 → 38 → 39 → Return to 37
*3: HA-101
*4: HA-111

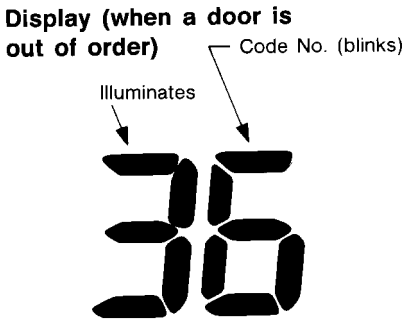


RHA168DA

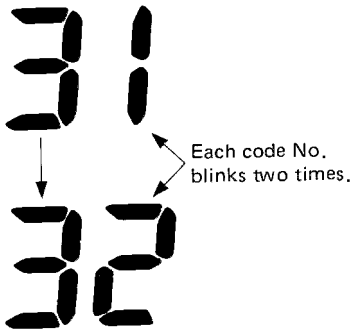


RHA498A

| ▶ | INSPECTION END |
|---|---|

## Self-diagnosis (Cont'd)

### AUXILIARY MECHANISM: TEMPERATURE SETTING TRIMMER

The trimmer compensates for differences in range of ±3°C (±6°F) between temperature setting (displayed digitally) and temperature felt by driver.

Operating procedures for this trimmer are as follows:

- Begin Self-diagnosis STEP 5 mode.
- Press (fan) UP switch to set system in auxiliary mode.
- Display shows "61 " in auxiliary mechanism.
  It takes approximately 3 seconds.
- Turn the temperature dial clockwise or counterclockwise: Temperature will change at a rate of 0.5°C (1°F).

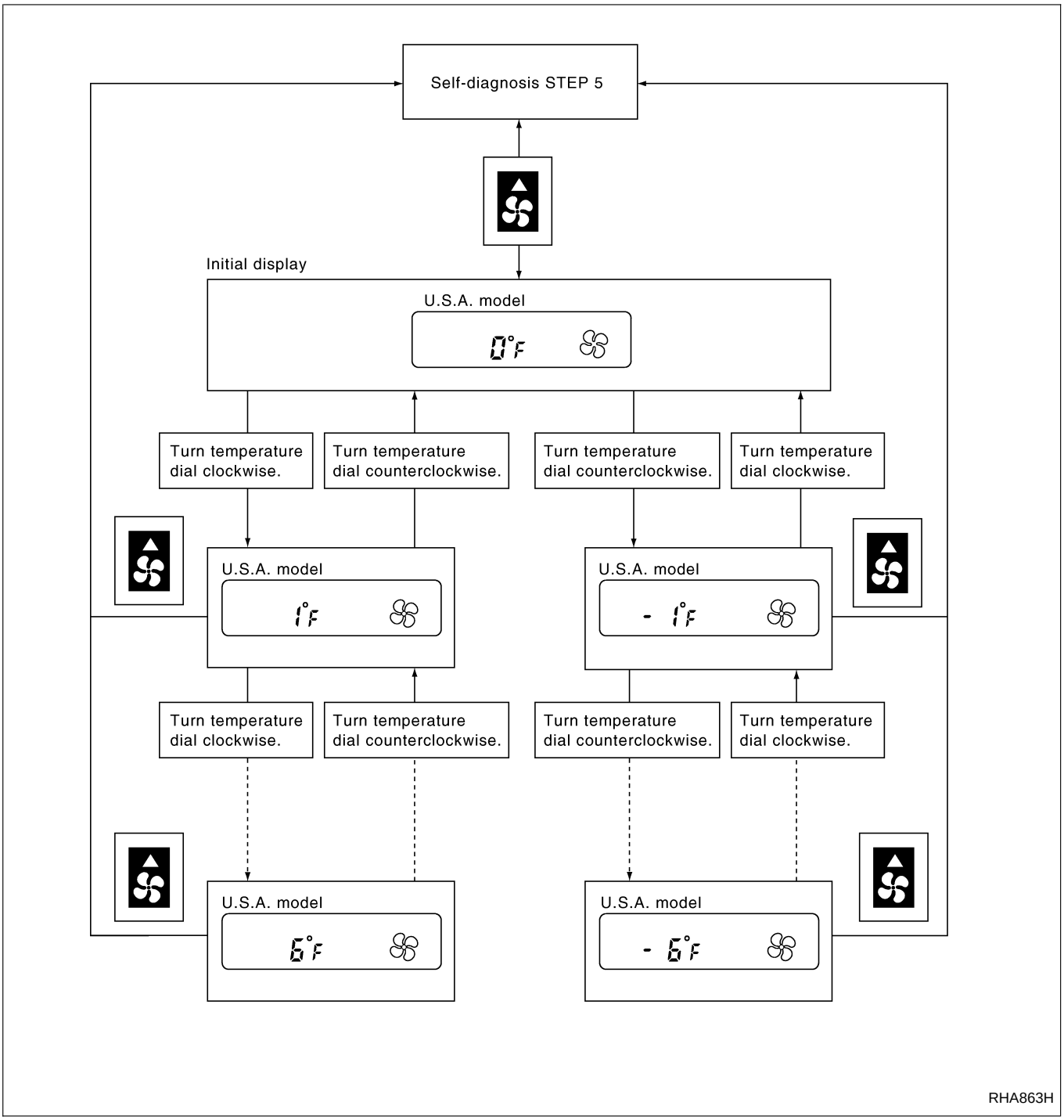


**When battery cable is disconnected, trimmer operation is canceled. Temperature set becomes that of initial condition, i.e. 0°C (0°F).**

## Preliminary Check

### PRELIMINARY CHECK 1

**Air outlet does not change.**

CHECK SENSOR CIRCUIT.
Set up Self-diagnosis STEP 2.
Is each sensor circuit normal?
**Code No. 20 should be indicated on the display after approx. 3 seconds.**

No →

CHECK SENSOR CIRCUIT IN DETAIL ACCORDING TO THE DIAGNOSTIC PROCEDURE BELOW CORRESPONDING TO EACH CODE NO.

| Code No. | How to repair | Reference page |
|---|---|---|
| 21/-21 | Go to Ambient Sensor Circuit. | HA-90 |
| 22/-22 | Go to In-vehicle Sensor Circuit. | HA-93 |
| 24/-24 | Go to Intake Sensor Circuit. | HA-96 |
| 25/-25 | Go to Sunload Sensor Circuit. | HA-97 |
| 26/-26 | Go to Air Mix Door Motor Circuit. | HA-102 |
| 27/-27 | Go to Bi-level Door Motor Circuit. | HA-104 |

Are sensor circuits for ambient sensor, in-vehicle sensor, and intake sensor operating normally? If malfunction is suspected, check temperature detected by each sensor using Self-diagnosis STEP 5. Confirm the temperature is within normal range before performing Diagnostic Procedures.

Yes ↓

CHECK MODE DOOR MOTOR.
Set up Self-diagnosis STEP 3.
Is mode door motor operating normally?
**Code No. 30 should be indicated on the display after approx. 3 seconds.**

No → Go to **Mode Door Motor Circuit.** (HA-100)

Yes ↓

CHECK MODE DOOR OPERATION.
Set up Self-diagnosis STEP 4.
Does air outlet change according to each code No.?

| 41 | 42 | 43 | 44 | 45 | 46 | 47 | 48 |
|---|---|---|---|---|---|---|---|
| VENT | VENT | B/L | B/L | B/L 2 | FOOT | F/D | DEF |

**Refer to Discharge Air Flow.** (HA-27)

No → CHECK SIDE LINK MECHANISM.
Refer to Control Linkage Adjustment.
(HA-123)

NG → Repair or adjust.

OK ↓

Go to **Mode Door Motor Circuit.** (HA-100)

Yes ↓

Air outlet control system is normal.

## PRELIMINARY CHECK 2

### Intake door does not change.

CHECK SENSOR CIRCUIT.
Set up Self-diagnosis STEP 2.
Is each sensor circuit normal?
**Code No. 20 should be indicated on the display after approx. 3 seconds later.**

No →

CHECK SENSOR CIRCUIT IN DETAIL ACCORDING TO THE DIAGNOSTIC PROCEDURE BELOW CORRESPONDED TO EACH CODE NO.

| Code No. | How to repair | Reference page |
|---|---|---|
| 21 /–21 | Go to Ambient Sensor Circuit. | HA-90 |
| 22 /–22 | Go to In-vehicle Sensor Circuit. | HA-93 |
| 24 /–24 | Go to Intake Sensor Circuit. | HA-96 |
| 25 /–25 | Go to Sunload Sensor Circuit. | HA-97 |
| 26 /–26 | Go to Air Mix Door Motor Circuit. | HA-102 |
| 27 /–27 | Go to Bi-level Door Motor Circuit. | HA-104 |

Are sensor circuits for ambient sensor, in-vehicle sensor, and intake sensor operating normally? If malfunction is suspected, check temperature detected by each sensor using Self-diagnosis STEP 5. Confirm the temperature is within normal range before performing Diagnostic Procedures.

Yes ↓

CHECK INTAKE DOOR MOTOR OPERATION.
Set up Self-diagnosis STEP 4.
Does intake air change according to each code No.?

| 41 | 42 | 43 | 44 | 45 | 46 | 47 | 48 |
|---|---|---|---|---|---|---|---|
| REC | REC | REC | 20% FRE | 20% FRE | FRE | FRE | FRE |

No →

CHECK INTAKE DOOR ROD or LEVER MECHANISM.
Refer to Control Linkage Adjustment. (HA-124)

NG → Repair or adjust.

OK ↓

Go to **Intake Door Motor Circuit.** (HA-109)

Yes ↓

Intake door control system is normal.

## PRELIMINARY CHECK 3

**Insufficient cooling**

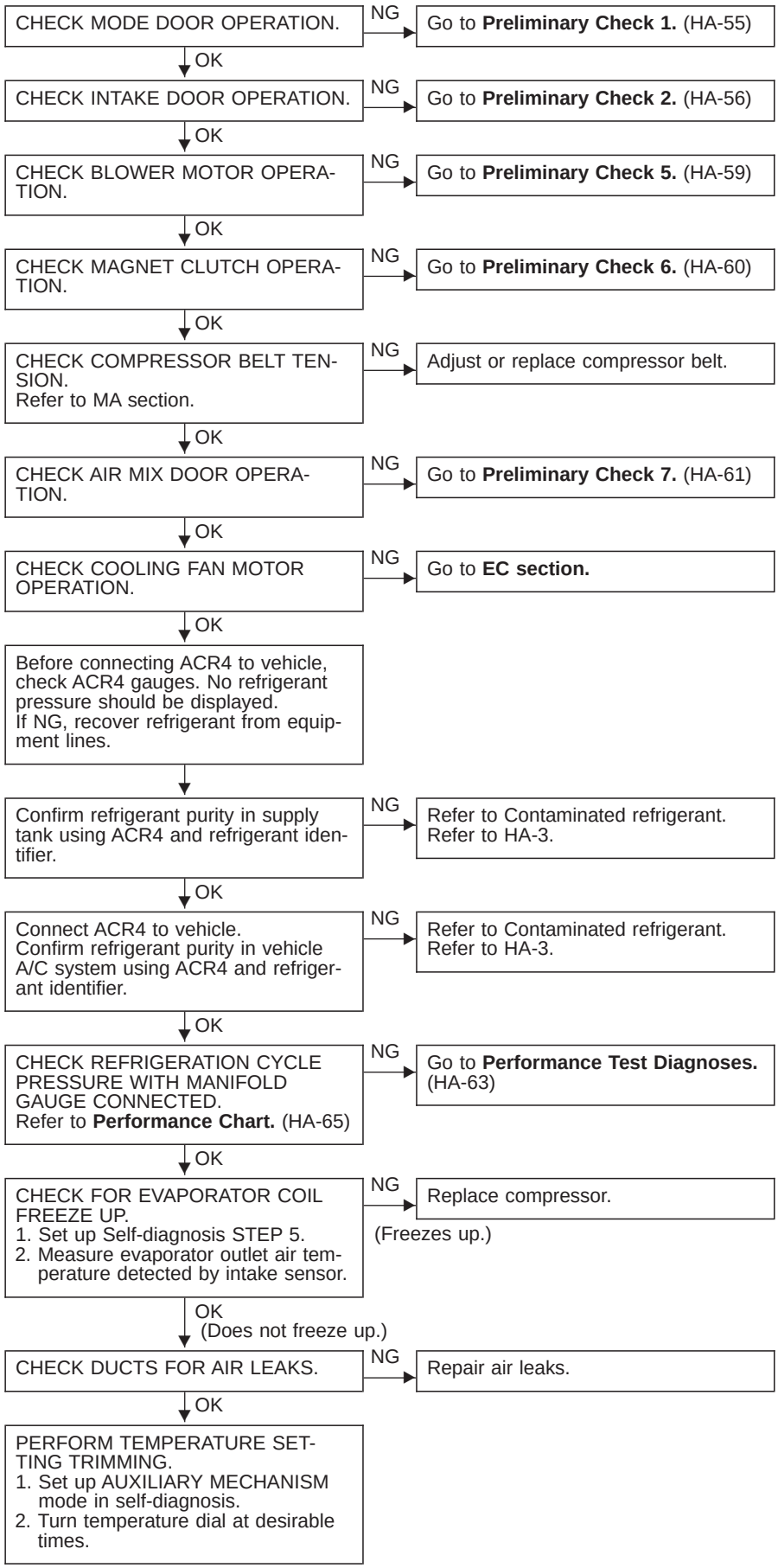

## PRELIMINARY CHECK 4

### Insufficient heating

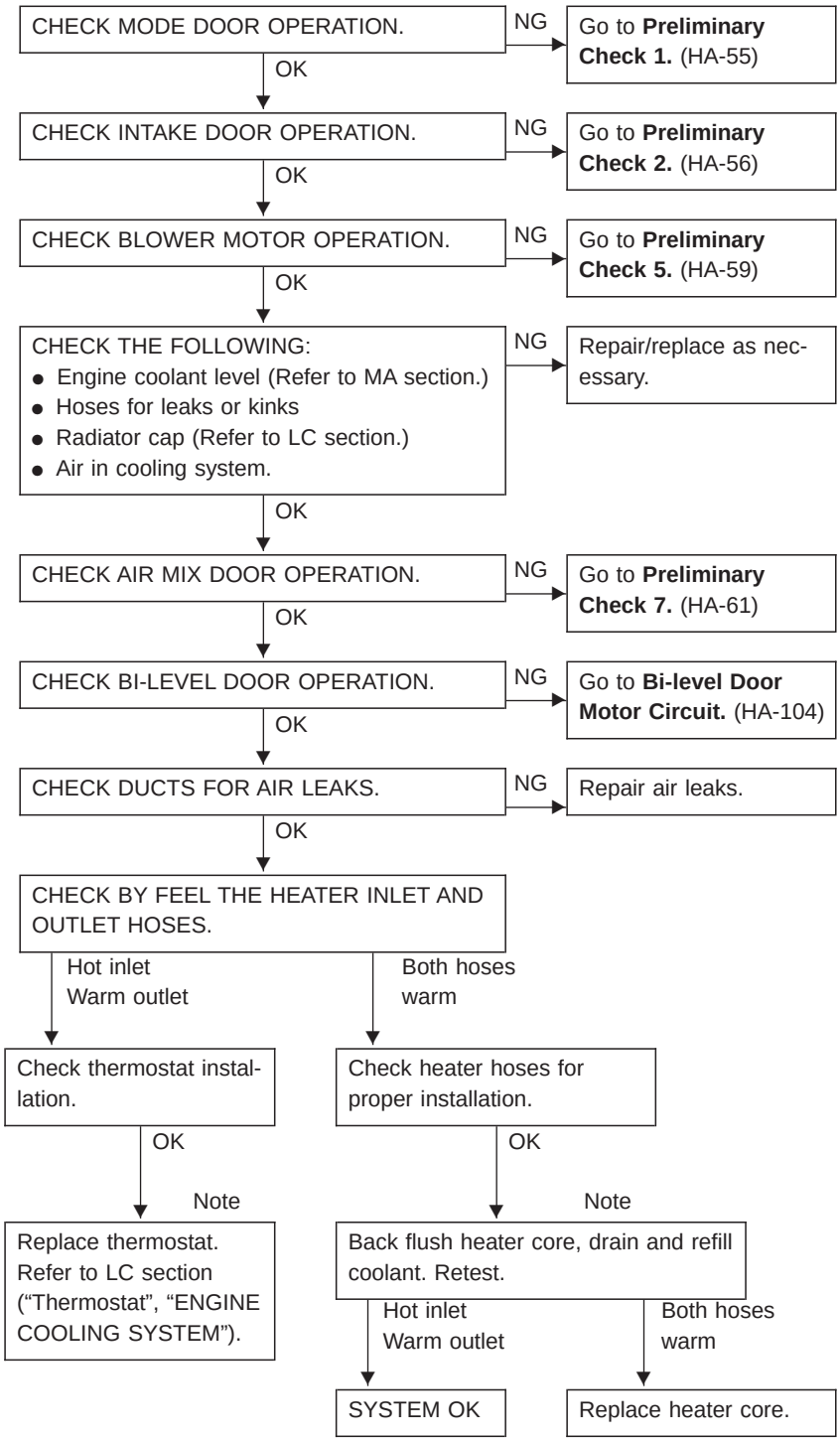


Note: To avoid unnecessary service of heating system, first perform TEMPERATURE SETTING TRIMMING. Refer to "AUXILIARY MECHANISM", "Self-diagnosis". (HA-43)

## PRELIMINARY CHECK 5

**Blower motor operation is malfunctioning.**

CHECK SENSOR CIRCUIT.
Set up Self-diagnosis STEP 2.
Is each sensor circuit normal?
**Code No. 20 should be indicated on the display after approx. 3 seconds.**

No →

CHECK SENSOR CIRCUIT IN DETAIL ACCORDING TO THE DIAGNOSTIC PROCEDURE BELOW CORRESPONDING TO EACH CODE NO.

| Code No. | How to repair | Reference page |
|---|---|---|
| 21/-21 | Go to Ambient Sensor Circuit. | HA-90 |
| 22/-22 | Go to In-vehicle Sensor Circuit. | HA-93 |
| 24/-24 | Go to Intake Sensor Circuit. | HA-96 |
| 25/-25 | Go to Sunload Sensor Circuit. | HA-97 |
| 26/-26 | Go to Air Mix Door Motor Circuit. | HA-102 |
| 27/-27 | Go to Bi-level Door Motor Circuit. | HA-104 |

Are sensor circuits for ambient sensor, in-vehicle sensor, and intake sensor operating normally? If malfunction is suspected, check temperature detected by each sensor using Self-diagnosis STEP 5. Confirm the temperature is within normal range before performing Diagnostic Procedures.

Yes ↓

CHECK BLOWER MOTOR OPERATION.
Set up Self-diagnosis STEP 4.
Does blower speed change according to each code No.?

| Code No. | 41 | 42 | 43 | 44 | 45 | 46 | 47 | 48 |
|---|---|---|---|---|---|---|---|---|
| Applied voltage | 5.0V | 5.0V | 12V | 8.5V | 8.5V | 8.5V | 8.5V | 12V |

No → Go to **Blower Motor Circuit.** (HA-113)

Yes ↓

Is engine coolant temperature below 56°C (133°F) and ambient temperature below 15°C (59°F)?

No → Blower motor operation is normal.

Yes ↓

IS BLOWER MOTOR CONTROLLED UNDER STARTING FAN SPEED CONTROL?
Refer to **STARTING BLOWER SPEED CONTROL.** (HA-114)

No → Check thermal transmitter.
Refer to EL section.

Yes ↓

Blower motor operation is normal.

## PRELIMINARY CHECK 6

### Magnet clutch does not engage.

CHECK SENSOR CIRCUIT.
Set up Self-diagnosis STEP 2.
Is each sensor circuit normal?
**Code No. 20 should be indicated on the display after approx. 3 seconds.**

No →

CHECK SENSOR CIRCUIT IN DETAIL ACCORDING TO THE DIAGNOSTIC PROCEDURE BELOW CORRESPONDED TO EACH CODE NO.

| Code No. | How to repair | Reference page |
|---|---|---|
| 21 /–21 | Go to Ambient Sensor Circuit. | HA-90 |
| 22 /–22 | Go to In-vehicle Sensor Circuit. | HA-93 |
| 24 /–24 | Go to Intake Sensor Circuit. | HA-96 |
| 25 /–25 | Go to Sunload Sensor Circuit. | HA-97 |
| 26 /–26 | Go to Air Mix Door Motor Circuit. | HA-102 |
| 27 /–27 | Go to Bi-level Door Motor Circuit. | HA-104 |

Are sensor circuits for ambient sensor, in-vehicle sensor, and intake sensor operating normally? If malfunction is suspected, check temperature detected by each sensor using Self-diagnosis STEP 5. Confirm the temperature is within normal range before performing Diagnostic Procedures.

Yes ↓

CHECK MAGNET CLUTCH OPERATION.
Set up Self-diagnosis STEP 4.
Does magnet clutch operate according to each code No.?

| Code No. | 41 | 42 | 43 | 44 | 45 | 46 | 47 | 48 |
|---|---|---|---|---|---|---|---|---|
| Compressor | ON | ON | ON | OFF | OFF | OFF | ON | ON |

No →

CHECK REFRIGERANT.
Connect manifold gauge, then check system pressure.

NG → Check refrigerant leaks.

OK ↓

Go to **Magnet Clutch Circuit.** (HA-118)

Yes ↓

Magnet clutch control system is normal.

## PRELIMINARY CHECK 7

**Discharged air temperature does not change.**

CHECK SENSOR CIRCUIT.
Set up Self-diagnosis STEP 2.
Is each sensor circuit normal?
**Code No. 20 should be indicated on the display after approx. 3 seconds later.**

No → CHECK SENSOR CIRCUIT IN DETAIL ACCORDING TO THE DIAGNOSTIC PROCEDURE BELOW CORRESPONDING TO EACH CODE NO.

| Code No. | How to repair | Reference page |
|---|---|---|
| 21/-21 | Go to Ambient Sensor Circuit. | HA-90 |
| 22/-22 | Go to In-vehicle Sensor Circuit. | HA-93 |
| 24/-24 | Go to Intake Sensor Circuit. | HA-96 |
| 25/-25 | Go to Sunload Sensor Circuit. | HA-97 |
| 26/-26 | Go to Air Mix Door Motor Circuit. | HA-102 |
| 27/-27 | Go to Bi-level Door Motor Circuit. | HA-104 |

Are sensor circuits for ambient sensor, in-vehicle sensor, and intake sensor operating normally? If malfunction is suspected, check temperature detected by each sensor using Self-diagnosis STEP 5. Confirm the temperature is within normal range before performing Diagnostic Procedures.

Yes ↓

CHECK AIR MIX DOOR OPERATION.
Set up Self-diagnosis STEP 4.
Does discharged air temperature change according to each code No.?

| 41 | 42 | 43 | 44 | 45 | 46 | 47 | 48 |
|---|---|---|---|---|---|---|---|
| Full cold | Full cold | Full cold | Full hot | Full hot | Full hot | Full hot | Full hot |

Yes → Air mix door control system is normal.

No ↓

CHECK AIR MIX DOOR MECHANISM.
Refer to Control Linkage Adjustment. (HA-123)

NG → Repair or adjust.

OK ↓

Go to **Air Mix Door Motor Circuit.** (HA-102)

## PRELIMINARY CHECK 8

### Noise

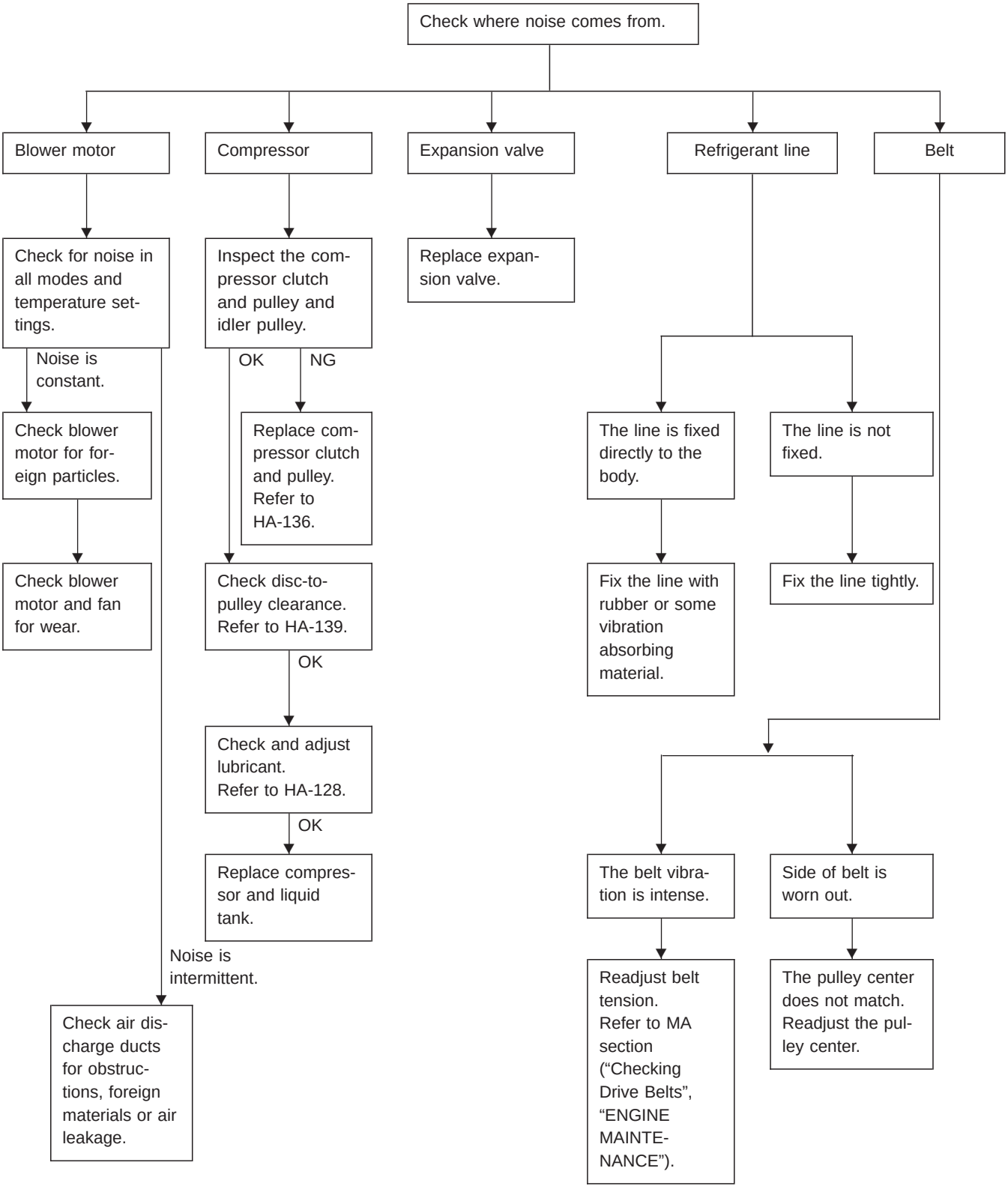

## Performance Test Diagnoses

### INSUFFICIENT COOLING

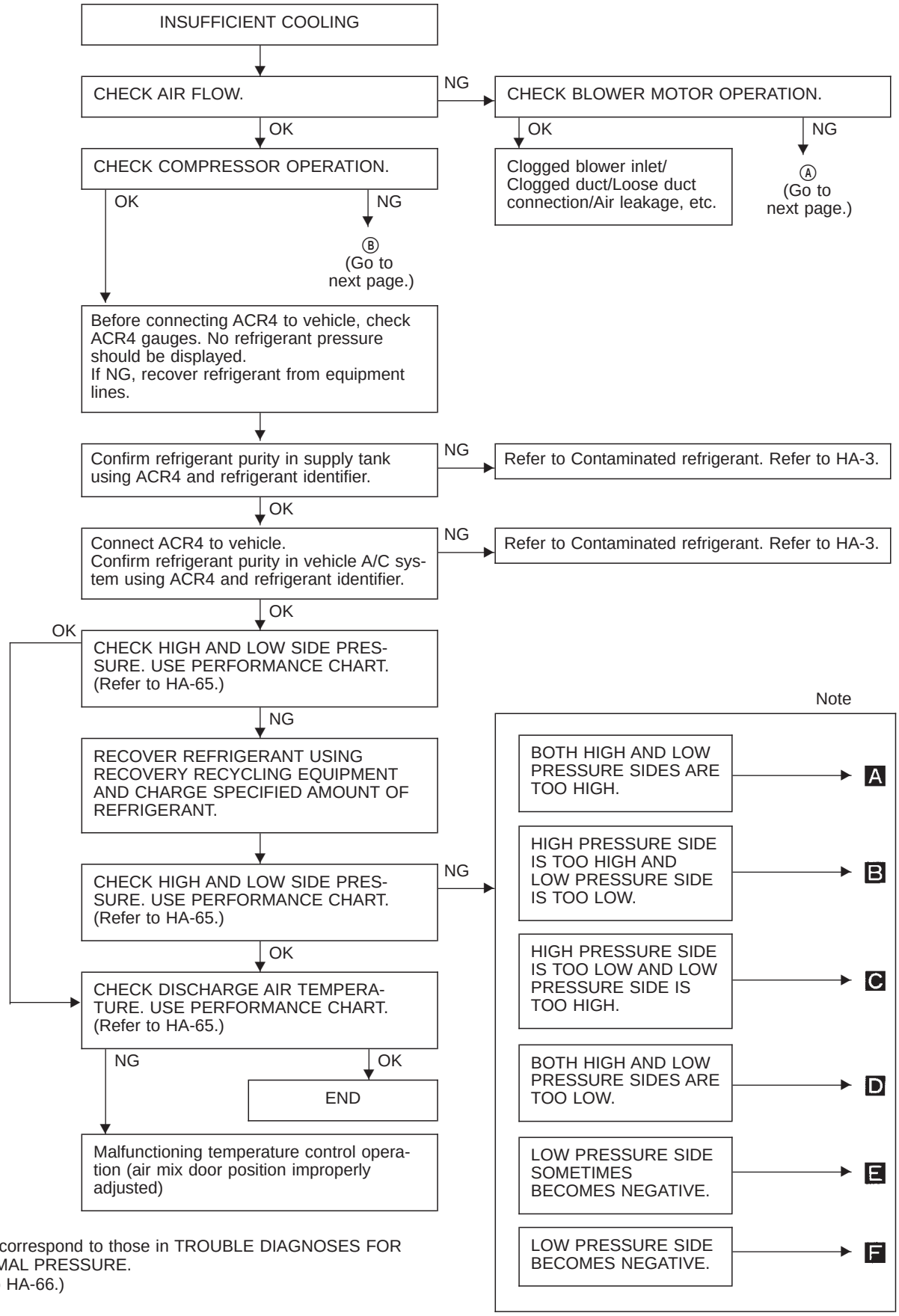


Note: A-F correspond to those in TROUBLE DIAGNOSES FOR ABNORMAL PRESSURE.
(Refer to HA-66.)

## Performance Test Diagnoses (Cont'd)

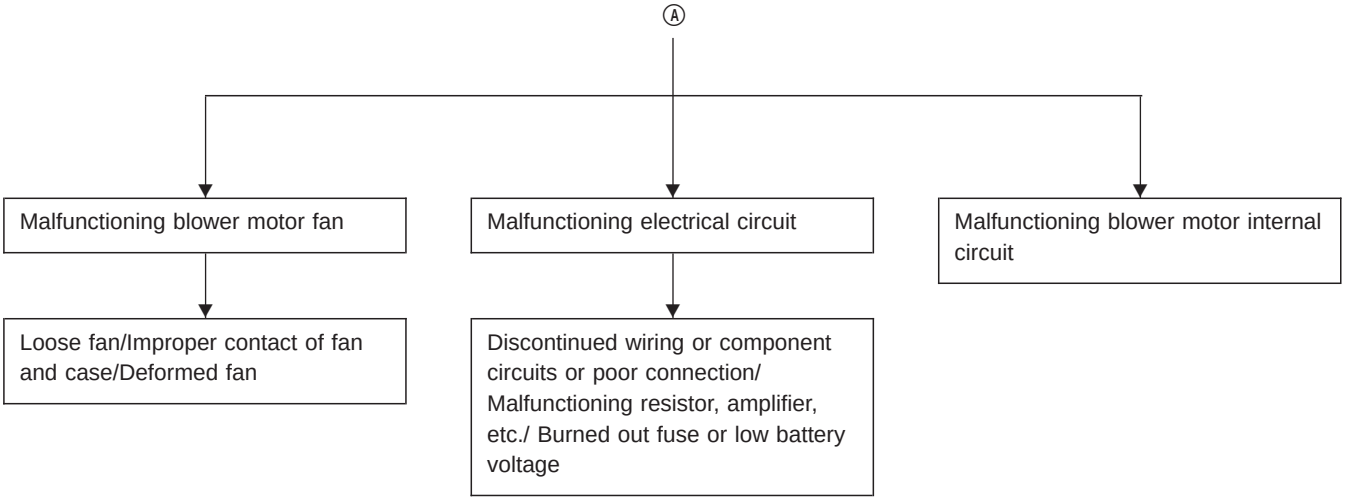


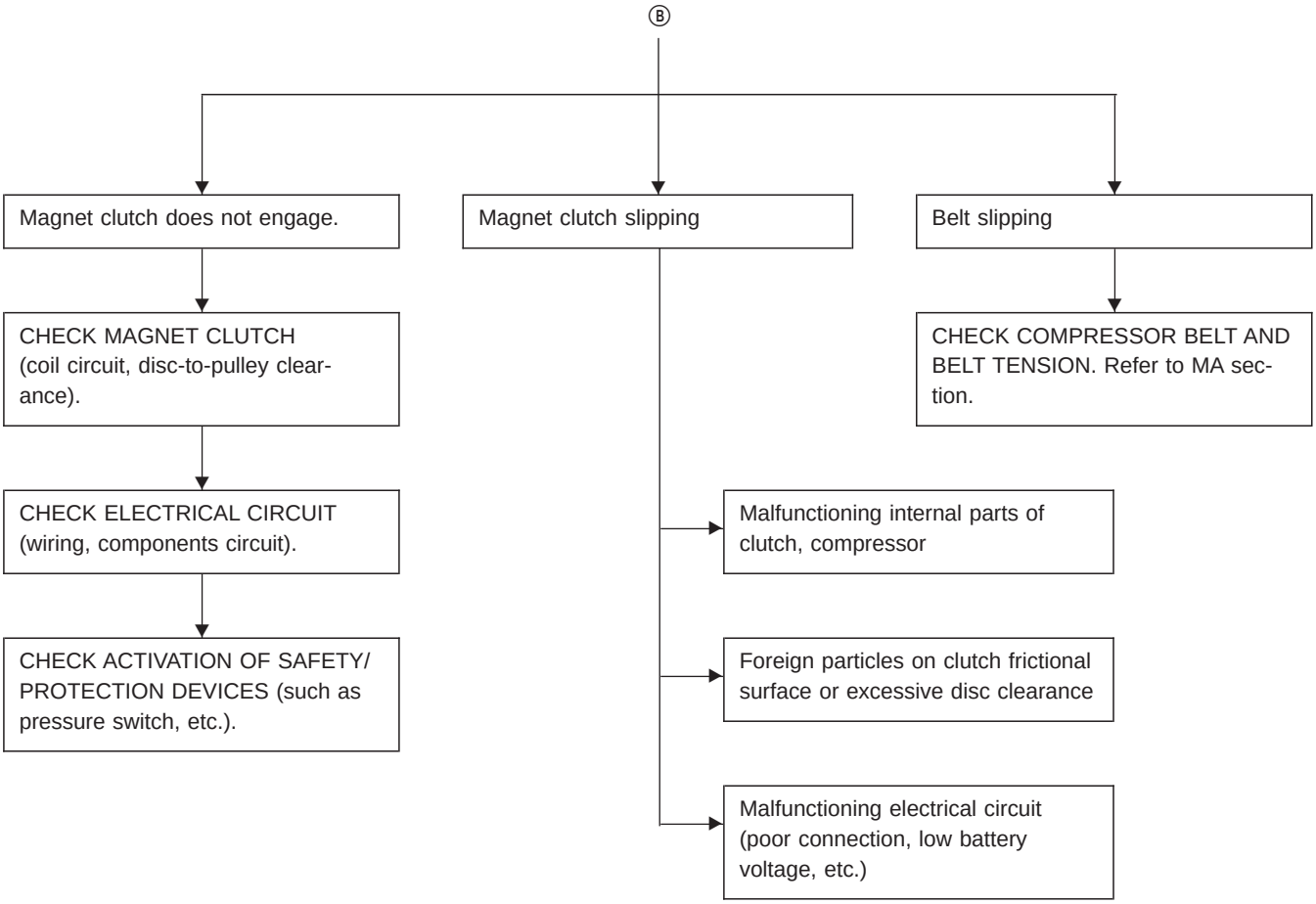

## Performance Chart

### TEST CONDITION

Testing must be performed as follows:

Vehicle location: Indoors or in the shade (in a well-ventilated place)
Doors: Closed
Door window: Open (Front driver side only)
Hood: Open
AUTO switch: ON
Temperature dial (PTC): Max. COLD set
Mode switch: (Ventilation) set
Rear ventilator switch: ON
(REC) switch: (Recirculation) set
(blower) switch: Max. speed set
Engine speed: Idle speed
Operate the air conditioning system for 10 minutes before taking measurements.

### TEST READING

**Recirculating-to-discharge air temperature table**

| Inside air (Recirculating air) at blower assembly inlet | | Discharge air temperature at center ventilator °C (°F) |
|---|---|---|
| Relative humidity % | Air temperature °C (°F) | |
| 50 - 60 | 25 (77) | 6.2 - 9.2 (43 - 49) |
| | 30 (86) | 10.4 - 13.5 (51 - 56) |
| | 35 (95) | 15.5 - 19.0 (60 - 66) |
| 60 - 70 | 25 (77) | 9.2 - 12.2 (49 - 54) |
| | 30 (86) | 13.5 - 17.0 (56 - 63) |
| | 35 (95) | 19.0 - 22.3 (66 - 72) |

**Ambient air temperature-to-operating pressure table**

| Ambient air | | High-pressure (Discharge side) kPa (kg/cm$^2$, psi) | Low-pressure (Suction side) kPa (kg/cm$^2$, psi) |
|---|---|---|---|
| Relative humidity % | Air temperature °C (°F) | | |
| 50 - 70 | 25 (77) | 1,089 - 1,500 (11.1 - 15.3, 158 - 218) | 196 - 275 (2.0 - 2.8, 28 - 40) |
| | 30 (86) | 1,226 - 1,657 (12.5 - 16.9, 178 - 240) | 245 - 324 (2.5 - 3.3, 36 - 47) |
| | 35 (95) | 1,383 - 1,844 (14.1 - 18.8, 201 - 267) | 284 - 382 (2.9 - 3.9, 41 - 55) |
| | 40 (104) | 1,569 - 2,099 (16.0 - 21.4, 228 - 304) | 343 - 451 (3.5 - 4.6, 50 - 65) |

## Trouble Diagnoses for Abnormal Pressure

Whenever system's high and/or low side pressure is abnormal, diagnose using a manifold gauge. The marker above the gauge scale in the following tables indicates the standard (normal) pressure range. Since the standard (normal) pressure, however, differs from vehicle to vehicle, refer to HA-65 ("Ambient air temperature-to-operating pressure table").

| Gauge indication | Refrigerant cycle | Probable cause | Corrective action |
|---|---|---|---|
| Both high and low-pressure sides are too high.<br>A<br> 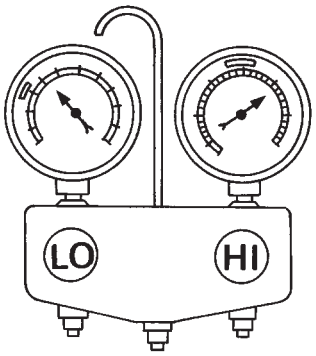 <br><br>AC359A | ● Pressure is reduced soon after water is splashed on condenser. | Excessive refrigerant charge in refrigeration cycle | Reduce refrigerant until specified pressure is obtained. |
| | Air suction by cooling fan is insufficient. | Insufficient condenser cooling performance<br>↓<br>① Condenser fins are clogged.<br>② Improper fan rotation of cooling fan | ● Clean condenser.<br>● Check and repair cooling fan as necessary. |
| | ● Low-pressure pipe is not cold.<br>● When compressor is stopped high-pressure value quickly drops by approximately 196 kPa (2 kg/cm$^2$, 28 psi). It then decreases gradually thereafter. | Poor heat exchange in condenser<br>(After compressor operation stops, high pressure decreases too slowly.)<br>↓<br>Air in refrigeration cycle | Evacuate repeatedly and recharge system. |
| | Engine tends to overheat. | Engine cooling systems malfunction. | Check and repair each engine cooling system. |
| | ● An area of the low-pressure pipe is colder than areas near the evaporator outlet.<br>● Plates are sometimes covered with frost. | ● Excessive liquid refrigerant on low-pressure side<br>● Excessive refrigerant discharge flow<br>● Expansion valve is open a little compared with the specification.<br>↓<br>① Improper thermal valve installation<br>② Improper expansion valve adjustment | Replace expansion valve. |
| High-pressure side is too high and low-pressure side is too low.<br>B<br> 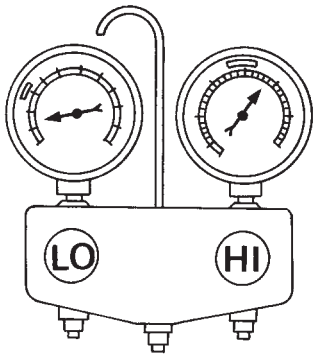 <br><br>AC360A | Upper side of condenser and high-pressure side are hot, however, liquid tank is not so hot. | High-pressure tube or parts located between compressor and condenser are clogged or crushed. | ● Check and repair or replace malfunctioning parts.<br>● Check lubricant for contamination. |

## Trouble Diagnoses for Abnormal Pressure (Cont'd)

| Gauge indication | Refrigerant cycle | Probable cause | Corrective action |
|---|---|---|---|
| High-pressure side is too low and low-pressure side is too high.<br>**C**<br> 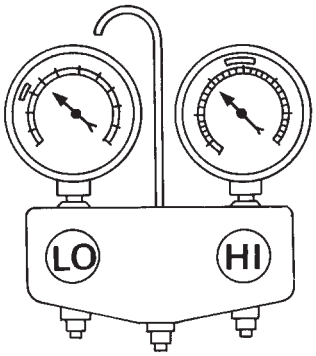 <br><br>AC356A | High and low-pressure sides become equal soon after compressor operation stops. | Compressor pressure operation is improper.<br>↓<br>Damaged inside compressor packings | Replace compressor. |
| | No temperature difference between high and low-pressure sides | Compressor pressure operation is improper.<br>↓<br>Damaged inside compressor packings. | Replace compressor. |
| Both high- and low-pressure sides are too low.<br>**D**<br> 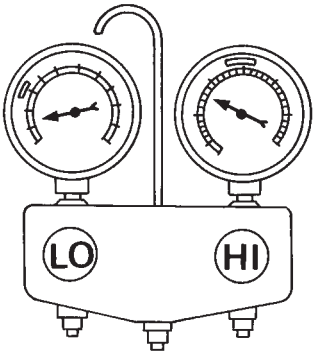 <br><br>AC353A | • There is a big temperature difference between receiver drier outlet and inlet. Outlet temperature is extremely low.<br>• Liquid tank inlet and expansion valve are frosted. | Compressor discharge capacity does not change. (Compressor stroke is set at maximum.) | • Replace liquid tank.<br>• Check lubricant for contamination. |
| | • Temperature of expansion valve inlet is extremely low as compared with areas near liquid tank.<br>• Expansion valve inlet may be frosted.<br>• Temperature difference occurs somewhere in high-pressure side | High-pressure pipe located between receiver drier and expansion valve is clogged. | • Check and repair malfunctioning parts.<br>• Check lubricant for contamination. |
| | • Expansion valve and liquid tank are warm or only cool when touched. | Low refrigerant charge<br>↓<br>Leaking fittings or components | Check refrigerant for leaks. Refer to "Checking Refrigerant Leaks", HA-131. |
| | There is a big temperature difference between expansion valve inlet and outlet while the valve itself is frosted. | Expansion valve closes a little compared with the specification.<br>↓<br>① Improper expansion valve adjustment<br>② Malfunctioning thermal valve<br>③ Outlet and inlet may be clogged. | • Remove foreign particles by using compressed air.<br>• Check lubricant for contamination. |
| | An area of the low-pressure pipe is colder than areas near the evaporator outlet. | Low-pressure pipe is clogged or crushed. | • Check and repair malfunctioning parts.<br>• Check lubricant for contamination. |
| | Air flow volume is not enough or is too low. | Evaporator is frozen.<br>↓<br>Compressor discharge capacity does not change. (Compressor stroke is set at maximum length.) | Replace compressor. |

## Trouble Diagnoses for Abnormal Pressure (Cont'd)

| Gauge indication | Refrigerant cycle | Probable cause | Corrective action |
|---|---|---|---|
| Low-pressure side sometimes becomes negative.<br>E<br> 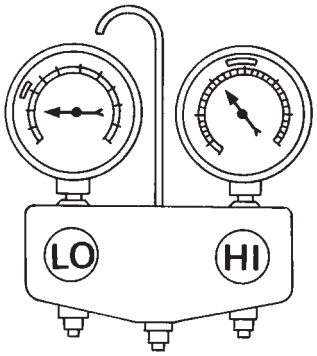 <br><br>AC354A | ● Air conditioning system does not function and does not cyclically cool the compartment air.<br>● The system constantly functions for a certain period of time after compressor is stopped and restarted. | Refrigerant does not discharge cyclically.<br>↓<br>Moisture is frozen at expansion valve outlet and inlet.<br>↓<br>Water is mixed with refrigerant. | ● Drain water from refrigerant or replace refrigerant.<br>● Replace liquid tank. |
| Low-pressure side becomes negative.<br>F<br> 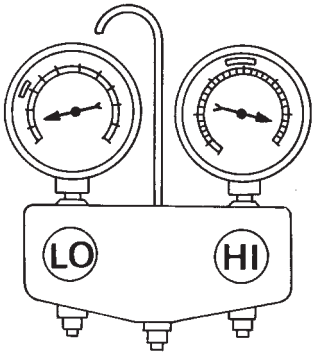 <br><br>AC362A | Liquid tank or front/rear side of expansion valve's pipe is frosted or dewed. | High-pressure side is closed and refrigerant does not flow.<br>↓<br>Expansion valve or liquid tank is frosted. | Leave the system at rest until no frost is present. Start it again to check whether or not the problem is caused by water or foreign particles.<br>● If water is the cause, initially cooling is okay. Then the water freezes, causing a blockage. Drain water from refrigerant or replace refrigerant.<br>● If due to foreign particles, remove expansion valve and remove the particles with dry and compressed air (not shop air).<br>● If either of the above methods cannot correct the problem, replace expansion valve.<br>● Replace liquid tank.<br>● Check lubricant for contamination. |

## Component Location

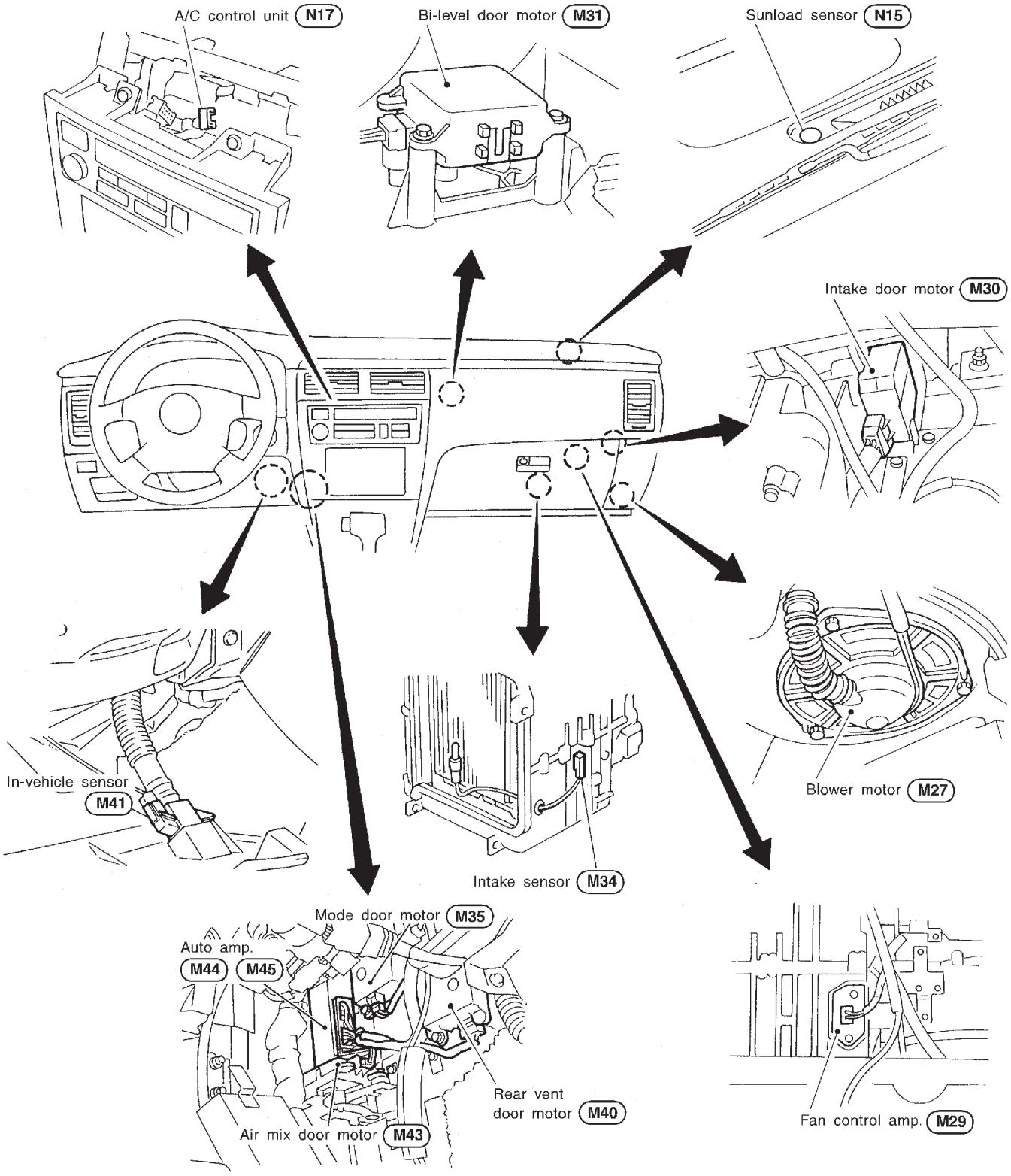


SHA198F

## Component Location (Cont'd)

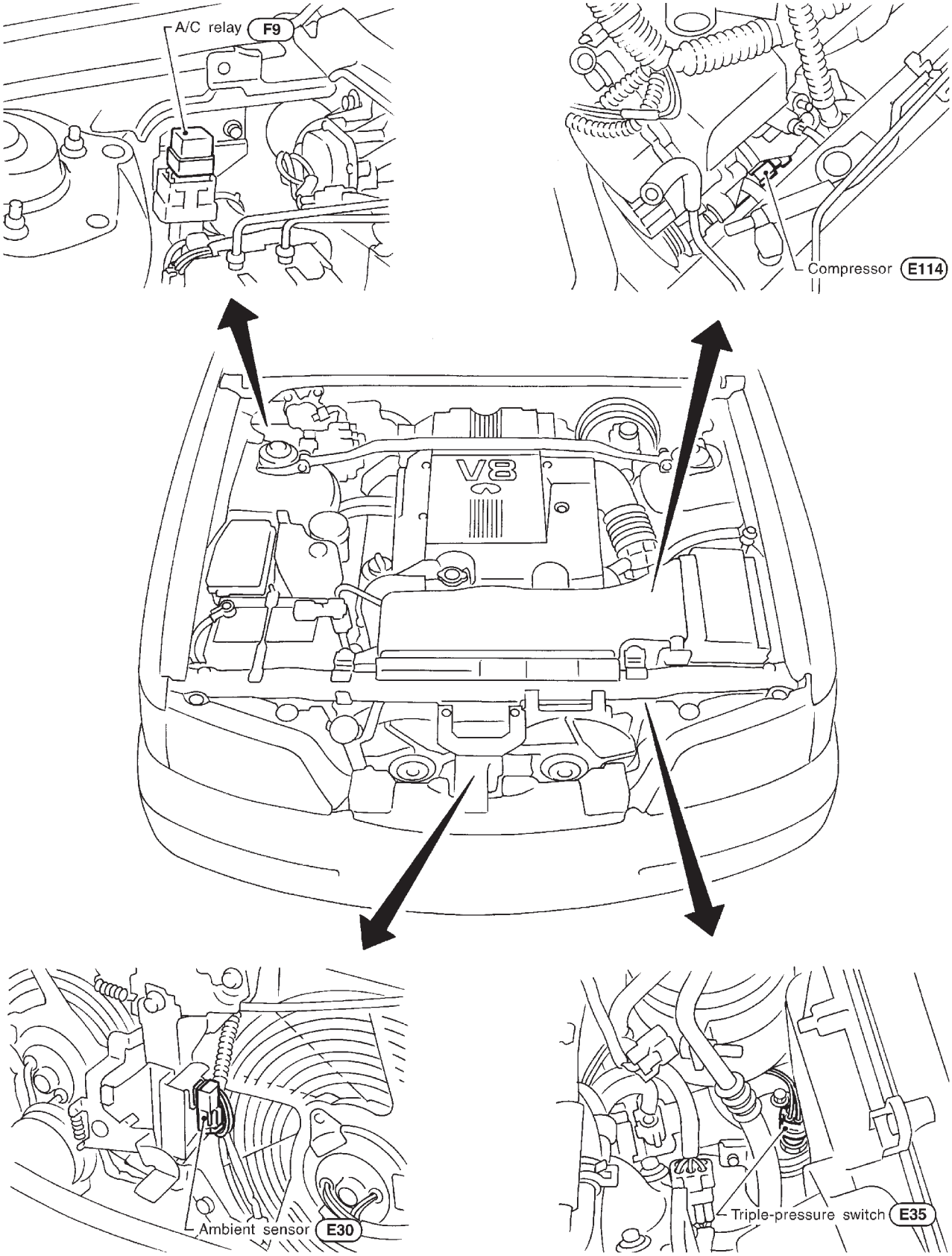


RHA947F

## Circuit Diagram/Without Navigation System

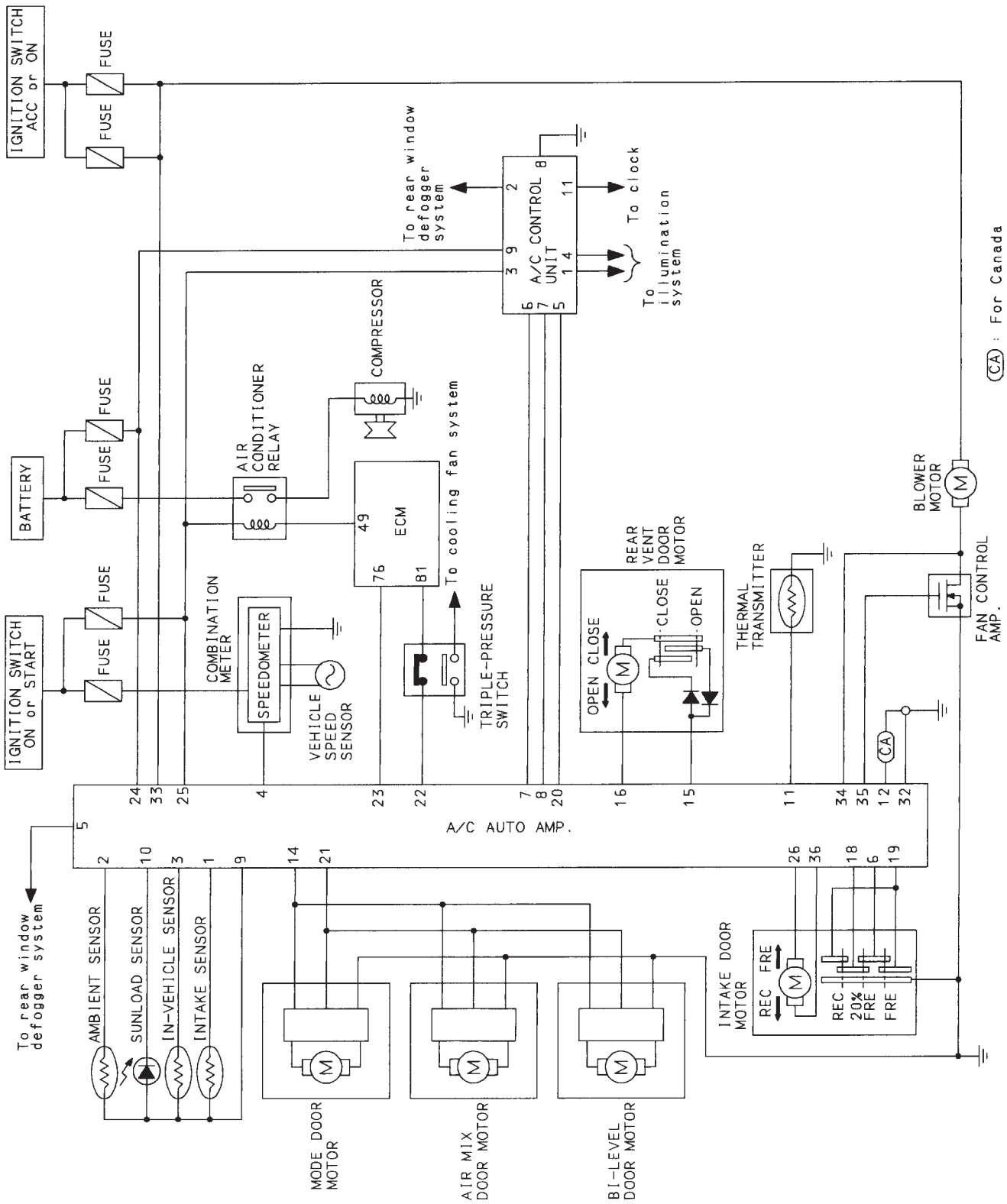


THA217

## Wiring Diagram — A/C —/Without Navigation System

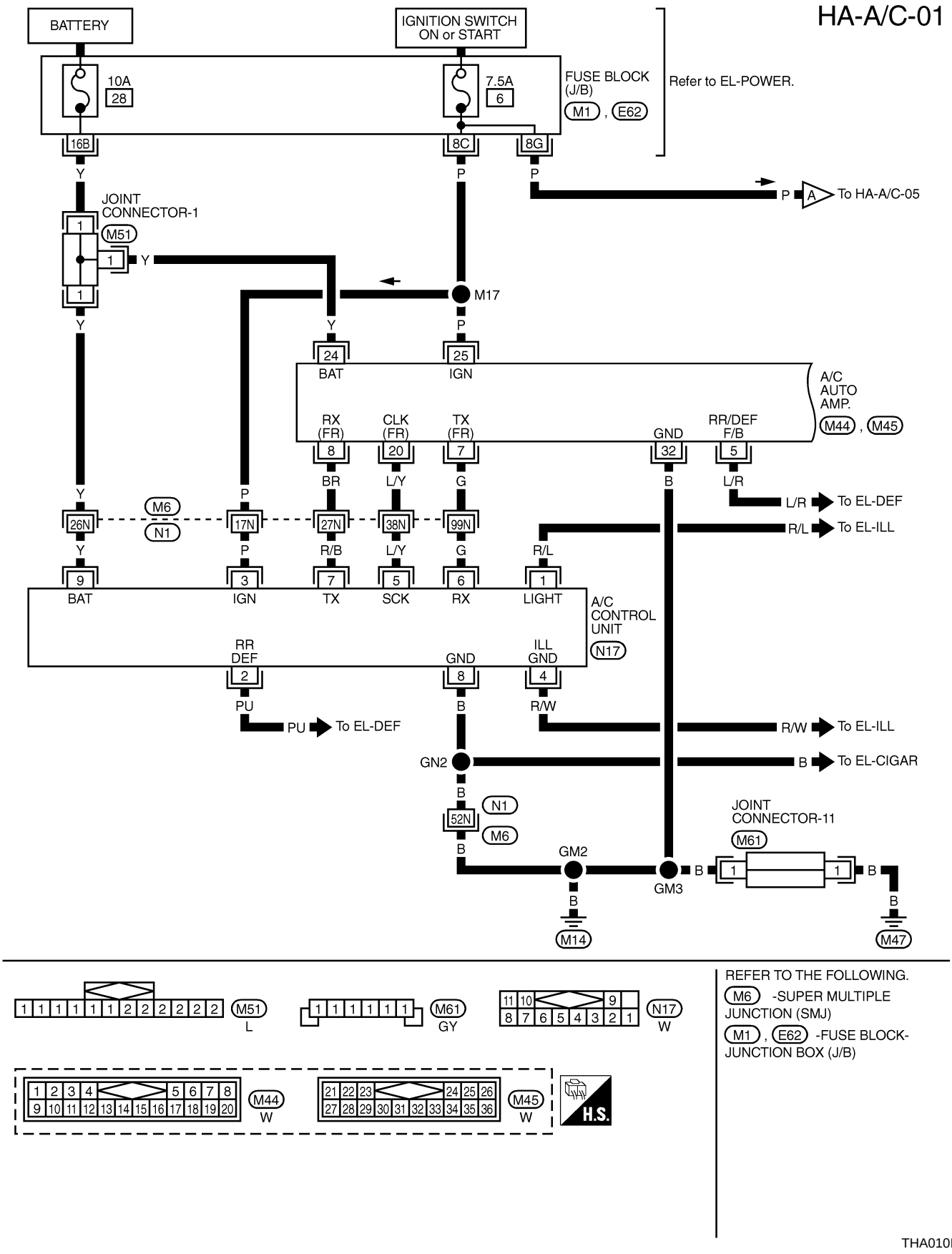





REFER TO THE FOLLOWING.

M6 -SUPER MULTIPLE JUNCTION (SMJ)

M1 , E62 -FUSE BLOCK-JUNCTION BOX (J/B)

THA010M

## Wiring Diagram — A/C —/Without Navigation System (Cont'd)

HA-A/C-02

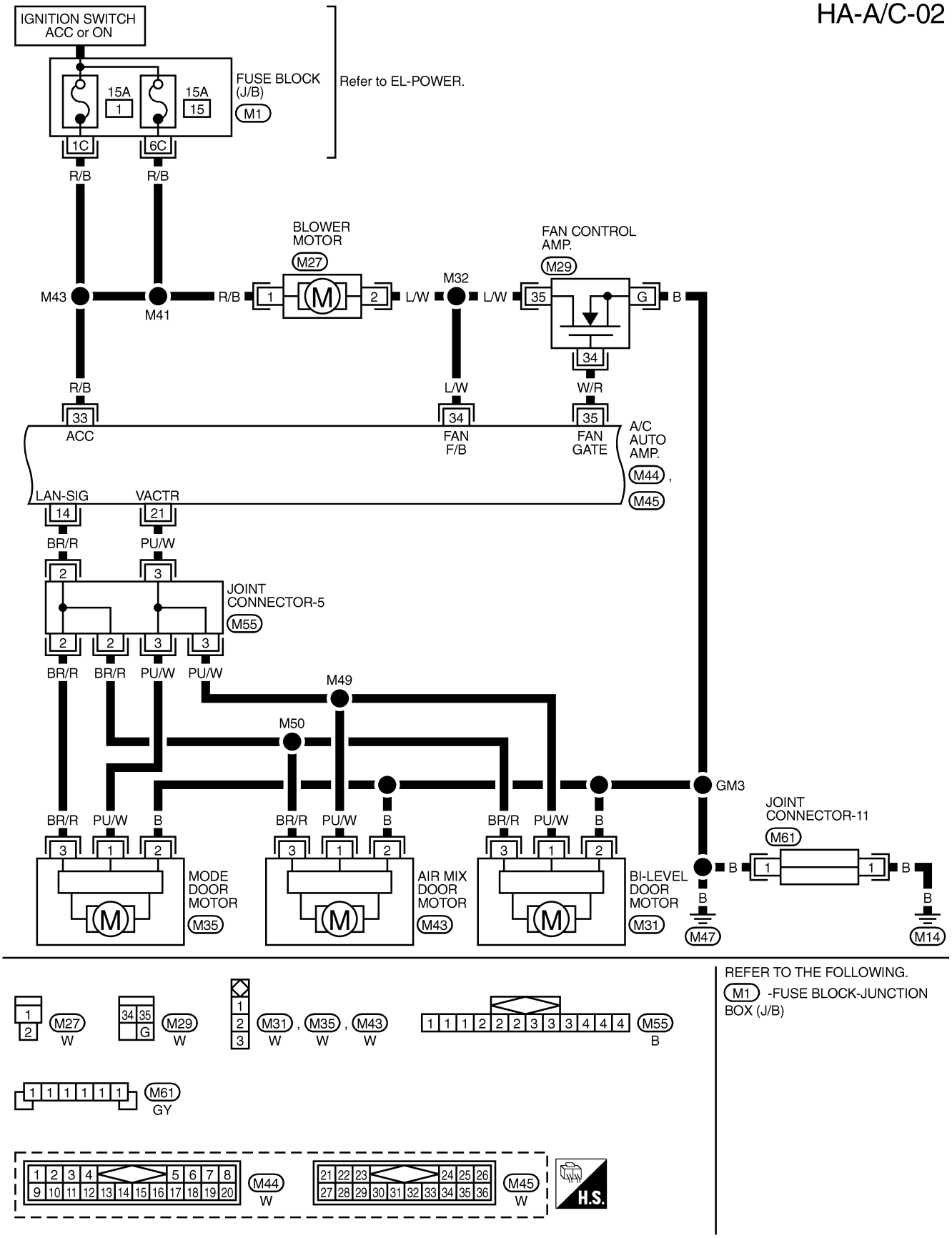


THA011M

## Wiring Diagram — A/C —/Without Navigation System (Cont'd)

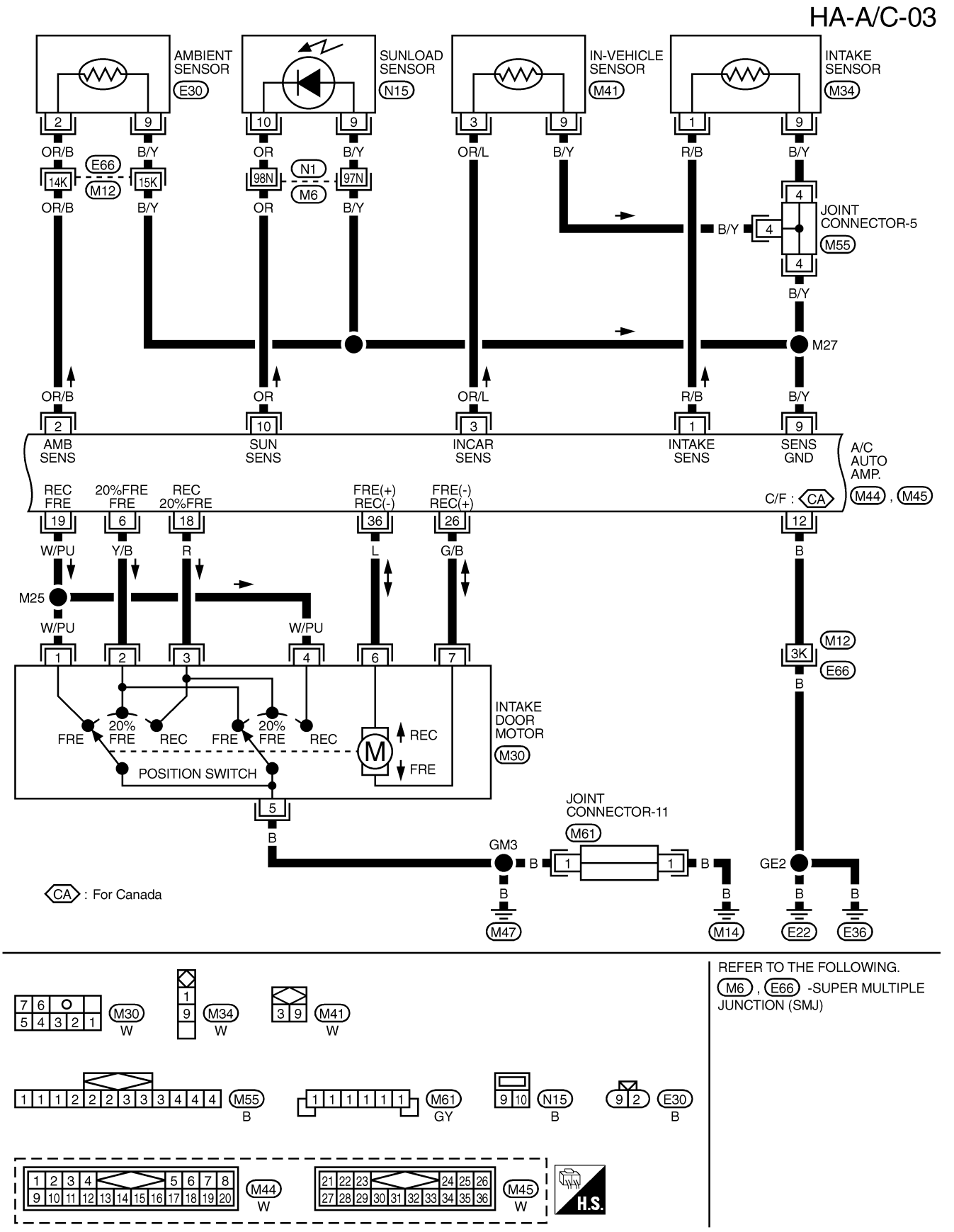


THA012M

## Wiring Diagram — A/C —/Without Navigation System (Cont'd)

HA-A/C-04

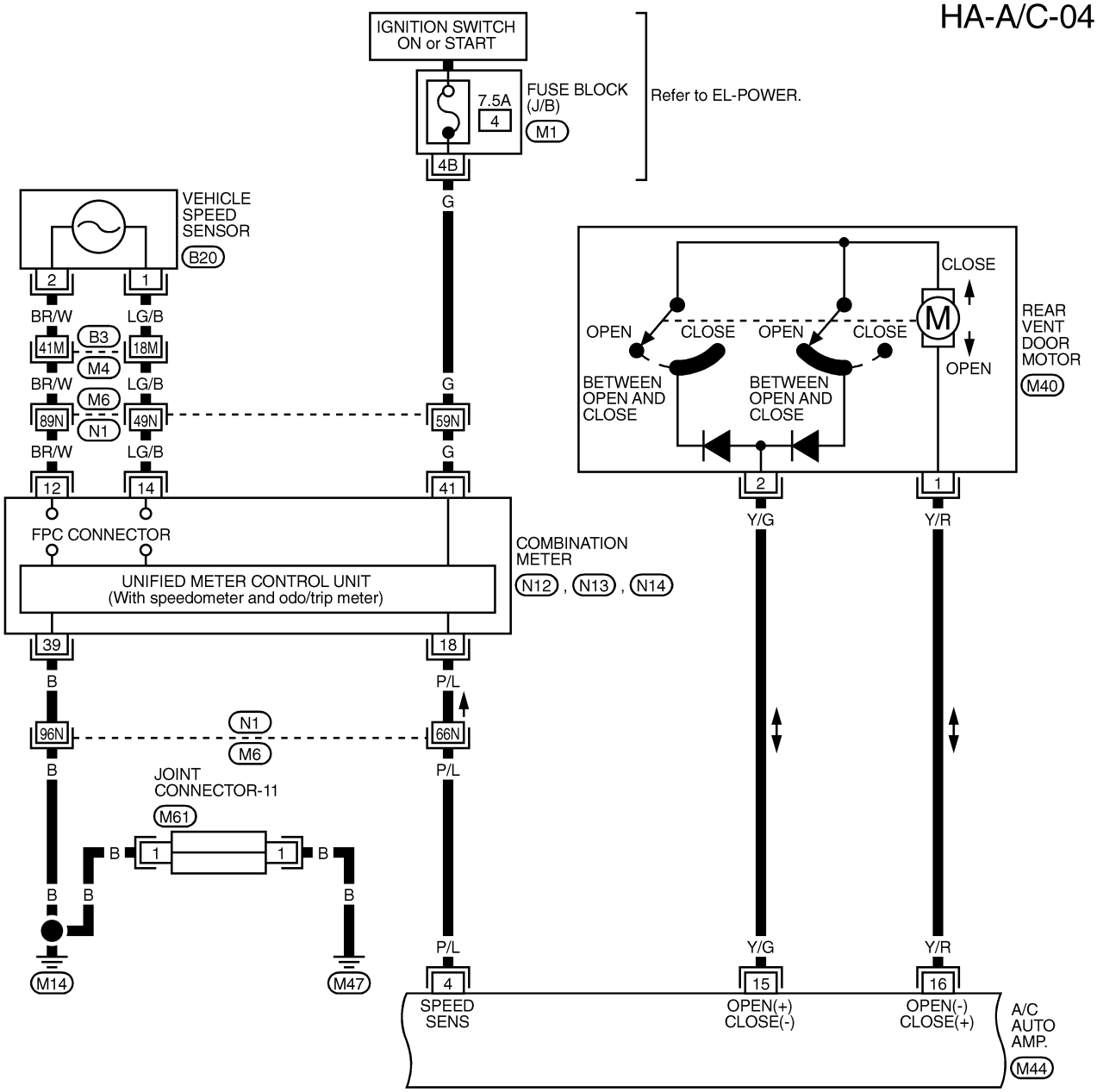


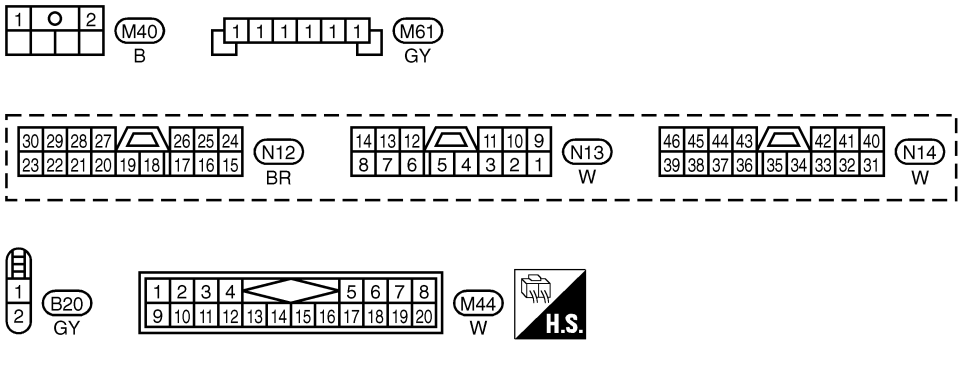


REFER TO THE FOLLOWING.

M4 , M6 -SUPER MULTIPLE JUNCTION (SMJ)

M1 -FUSE BLOCK-JUNCTION BOX (J/B)

THA013M

## Wiring Diagram — A/C —/Without Navigation System (Cont'd)

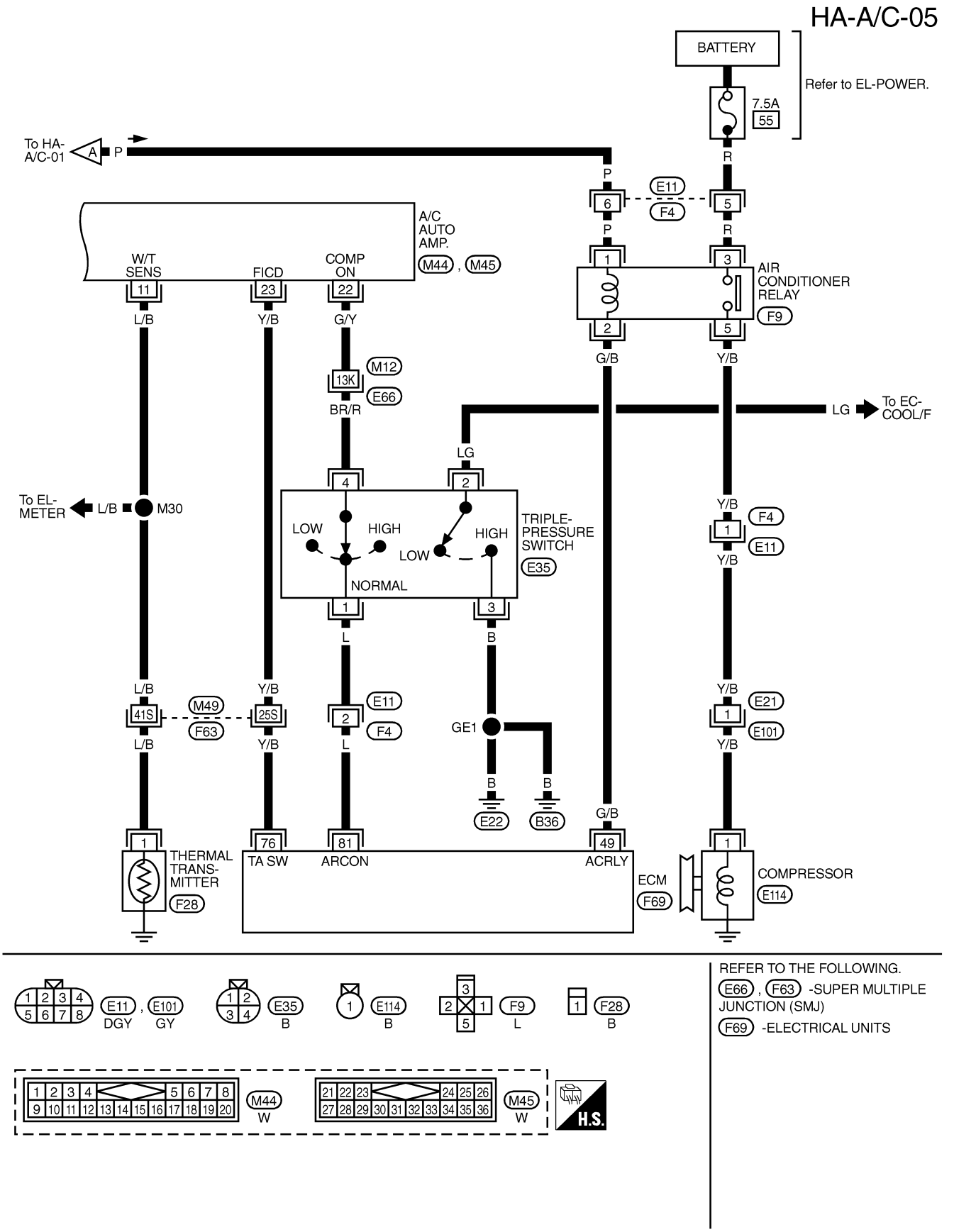

## Circuit Diagram/With Navigation System

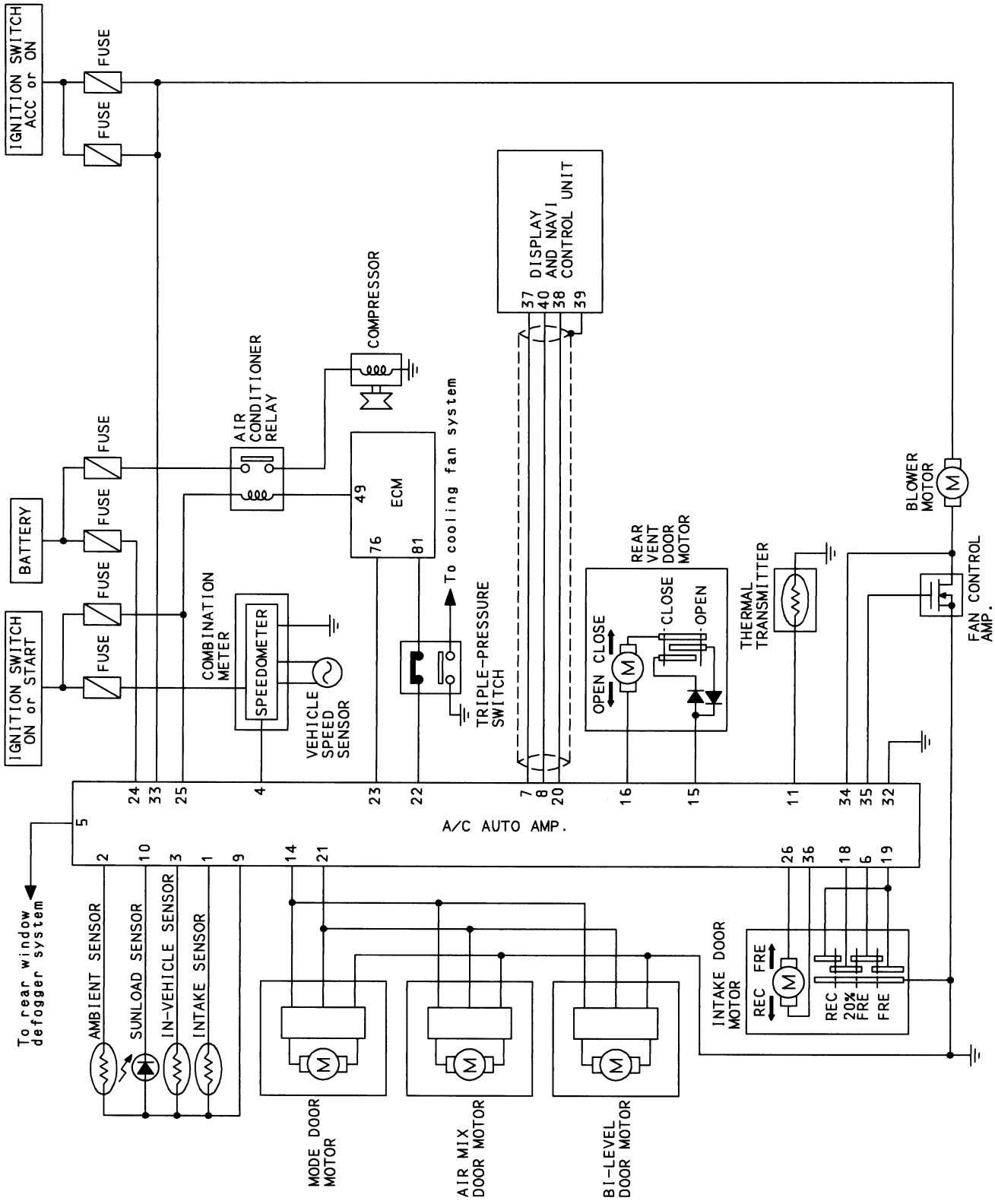


THA276

## Wiring Diagram — A/C, A —/With Navigation System

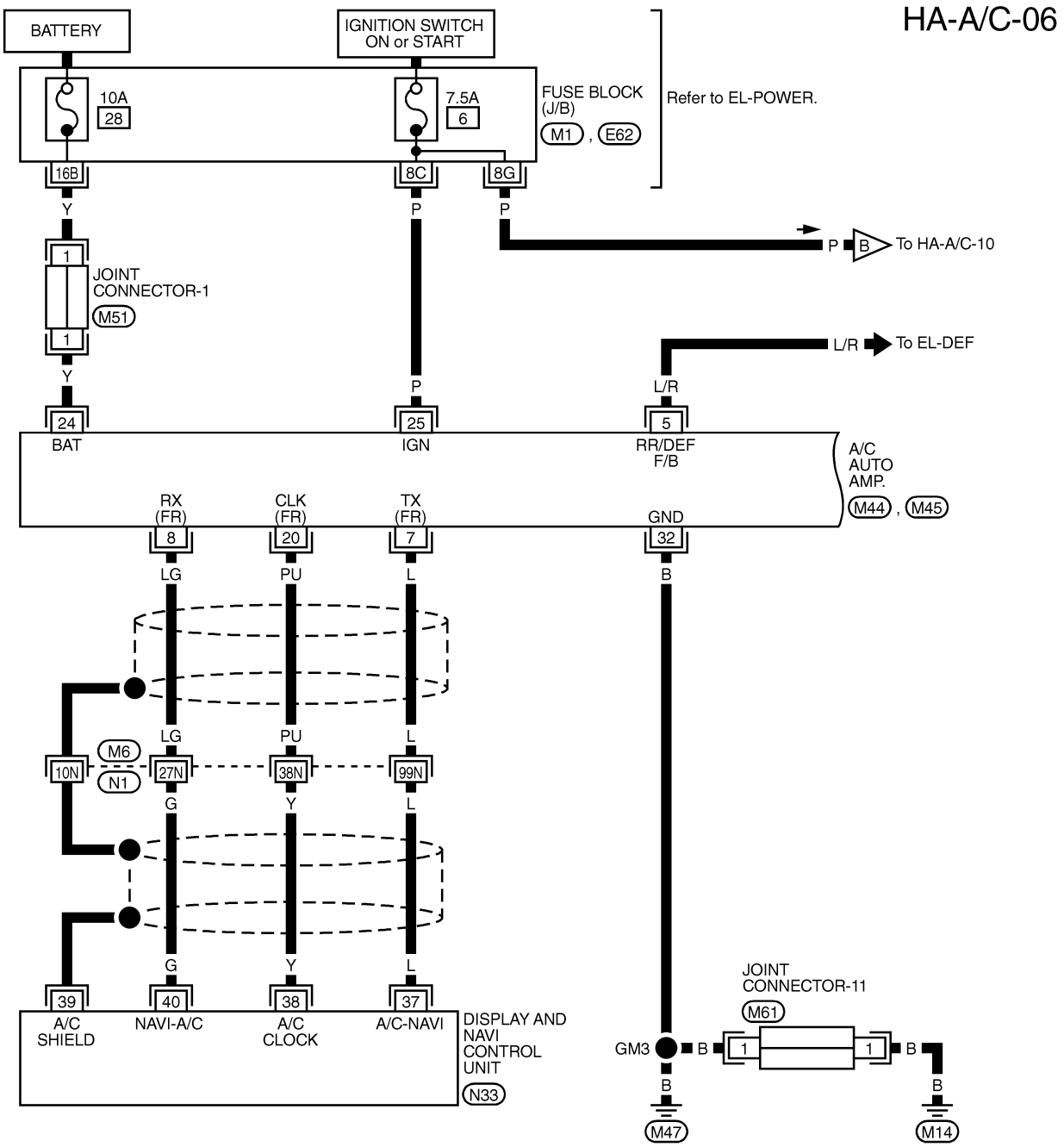


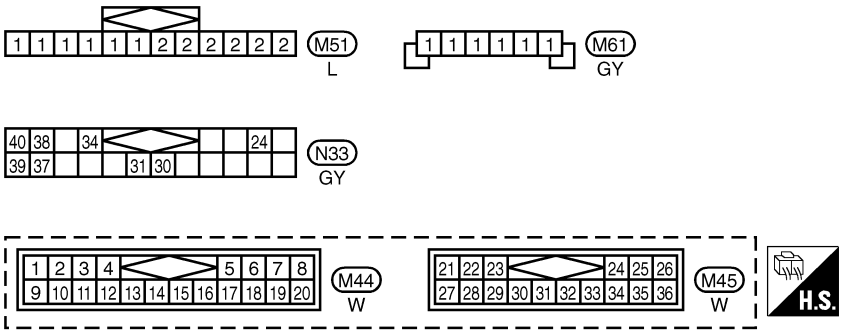


REFER TO THE FOLLOWING.

M6 -SUPER MULTIPLE JUNCTION (SMJ)

M1 , E62 -FUSE BLOCK-JUNCTION BOX (J/B)

THA279

## Wiring Diagram — A/C, A —/With Navigation System (Cont'd)

HA-A/C-07

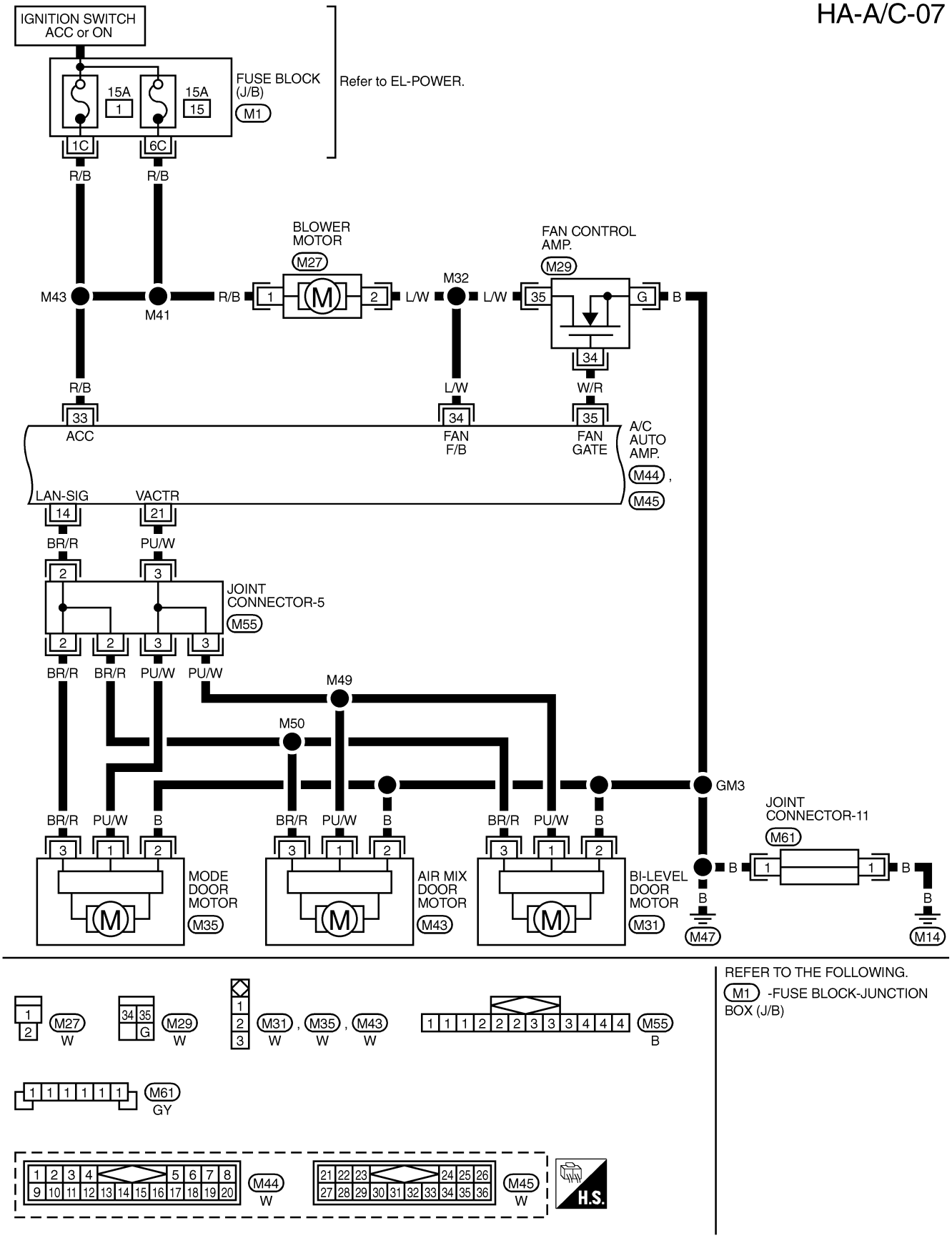


REFER TO THE FOLLOWING.
M1 -FUSE BLOCK-JUNCTION BOX (J/B)

THA280

## Wiring Diagram — A/C, A —/With Navigation System (Cont'd)

HA-A/C-08

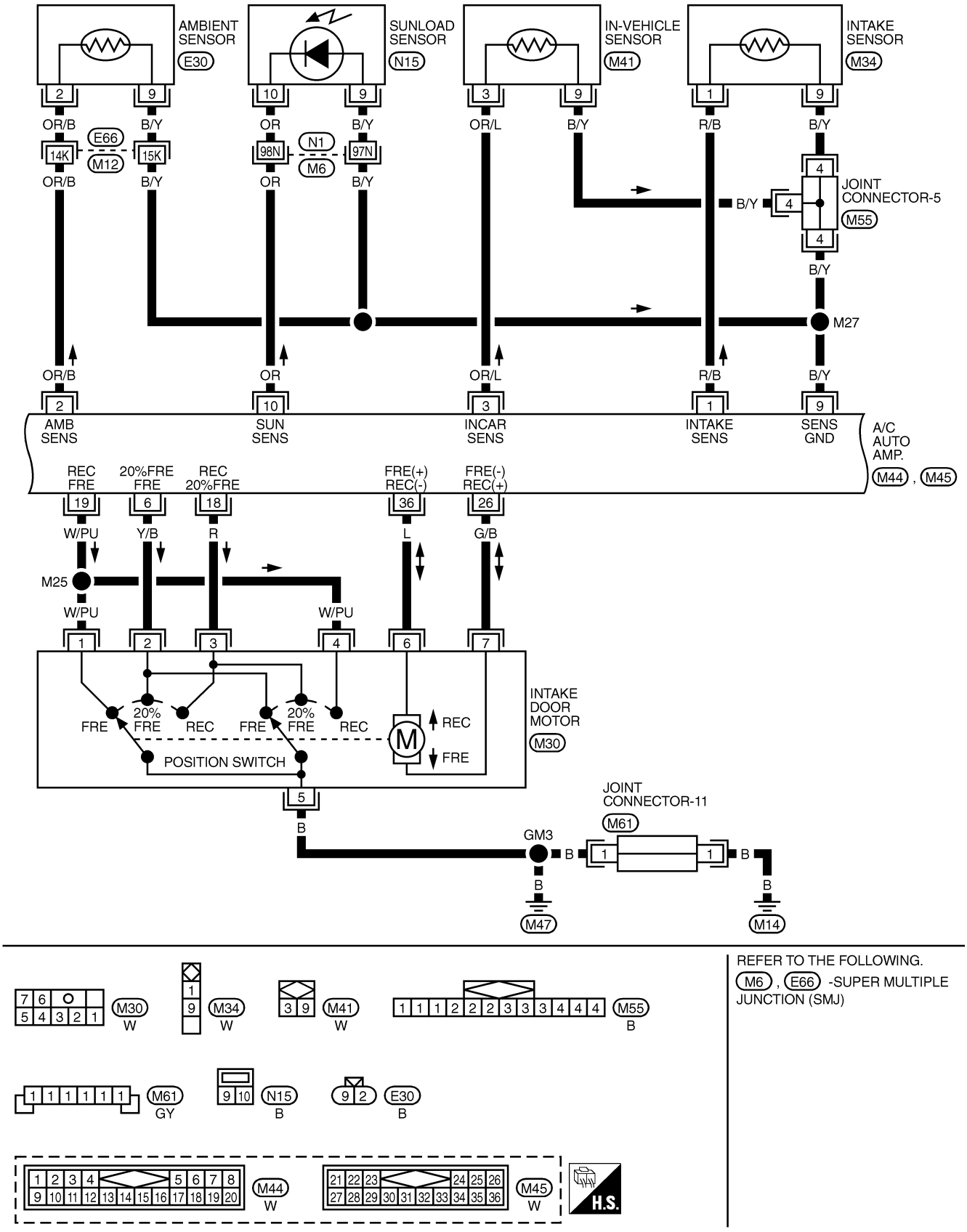


REFER TO THE FOLLOWING.
M6 , E66 -SUPER MULTIPLE JUNCTION (SMJ)

THA281

## Wiring Diagram — A/C, A —/With Navigation System (Cont'd)

HA-A/C-09

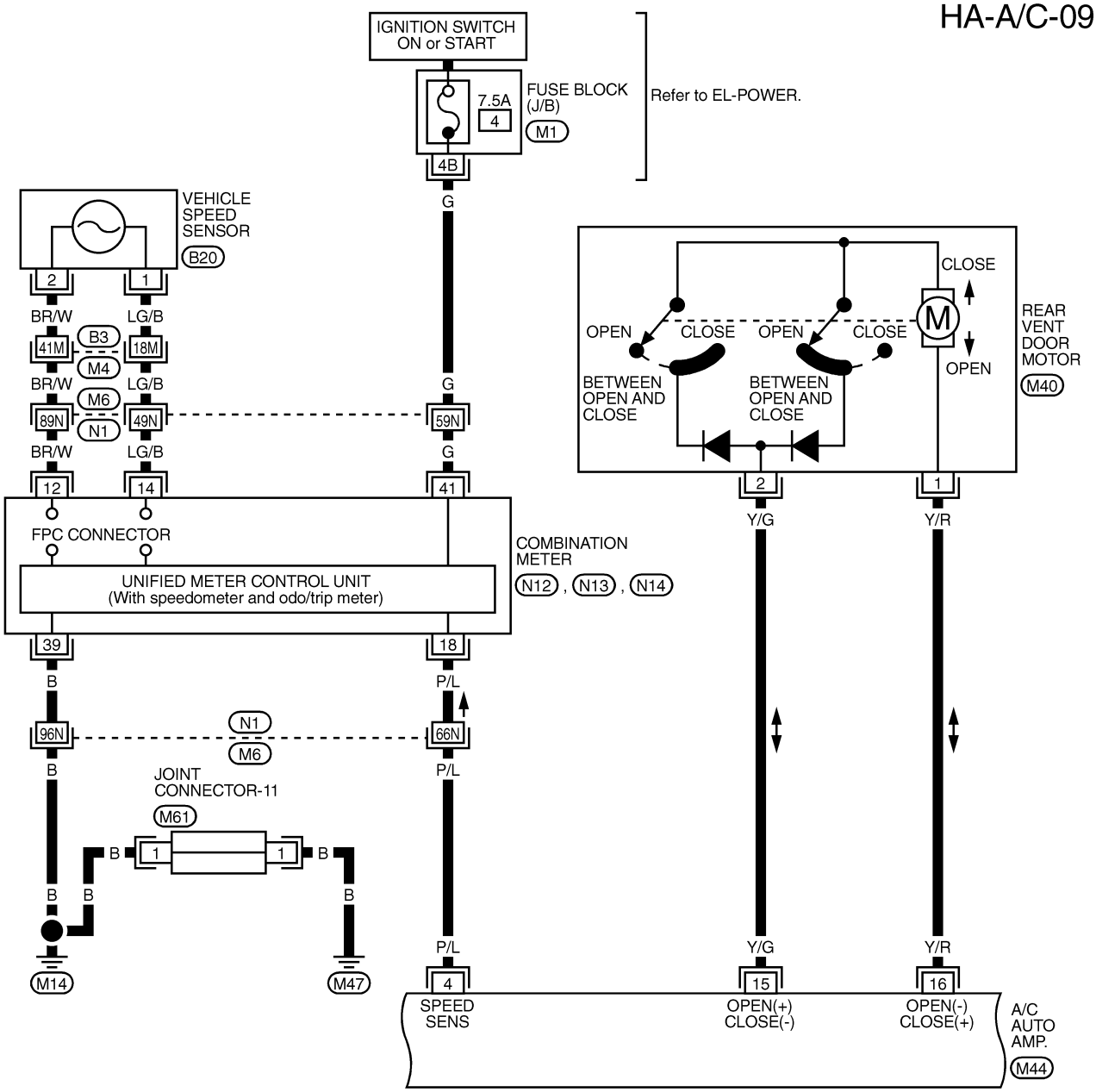


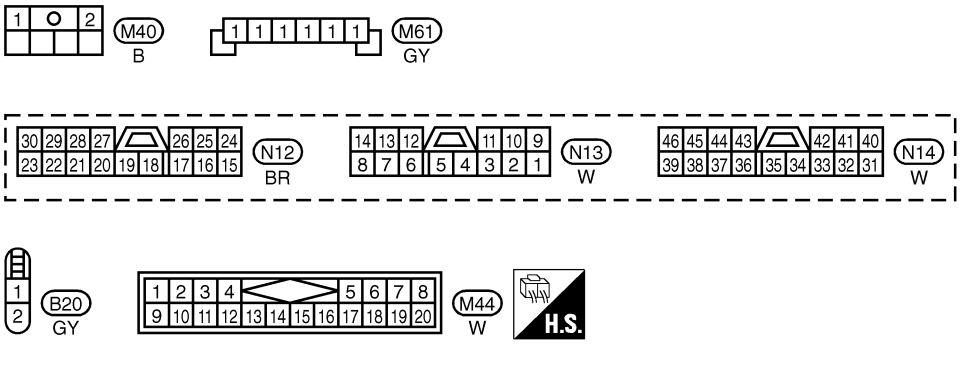


REFER TO THE FOLLOWING.

M4 , M6 -SUPER MULTIPLE JUNCTION (SMJ)

M1 -FUSE BLOCK-JUNCTION BOX (J/B)

THA282

## Wiring Diagram — A/C, A —/With Navigation System (Cont'd)

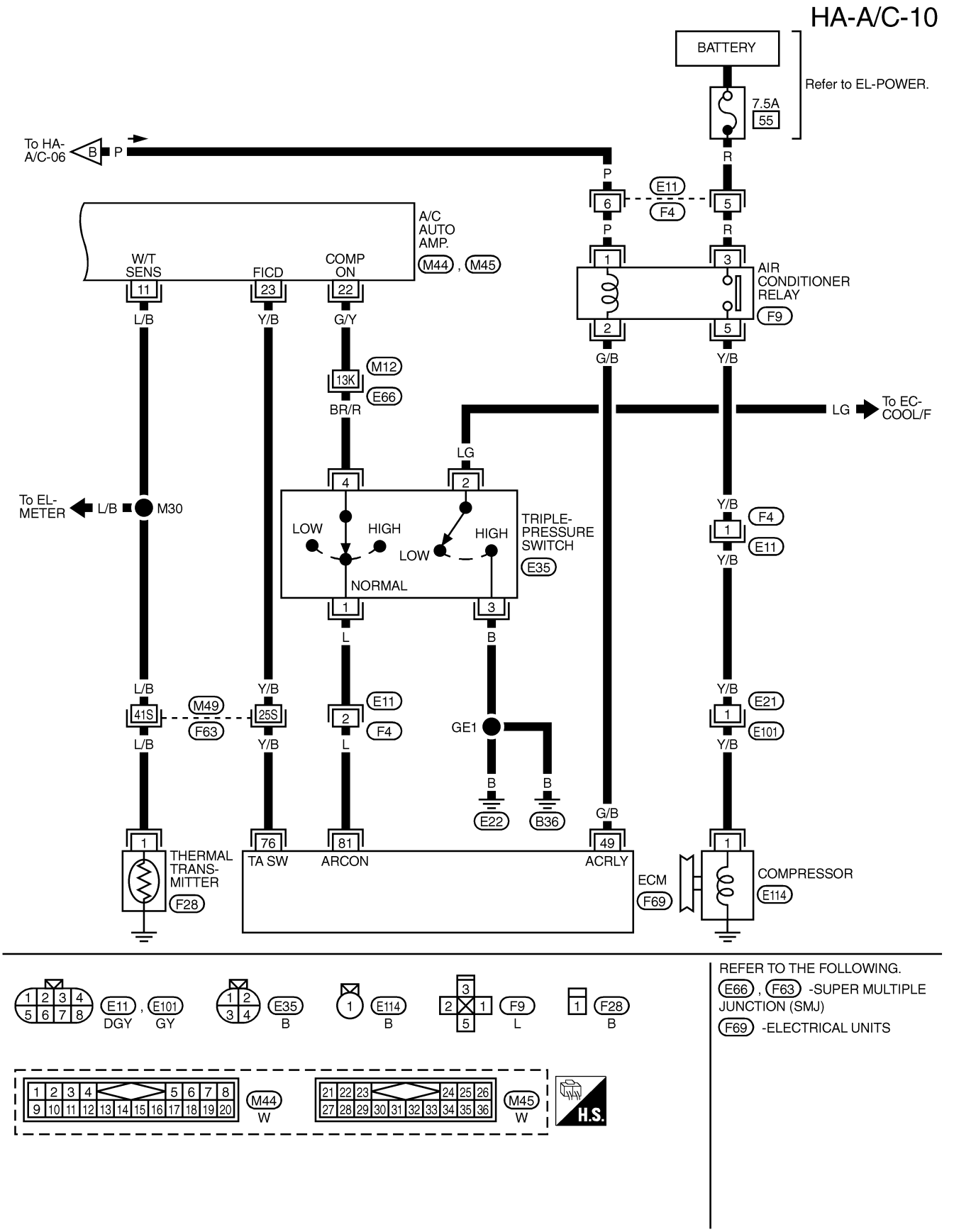


THA283

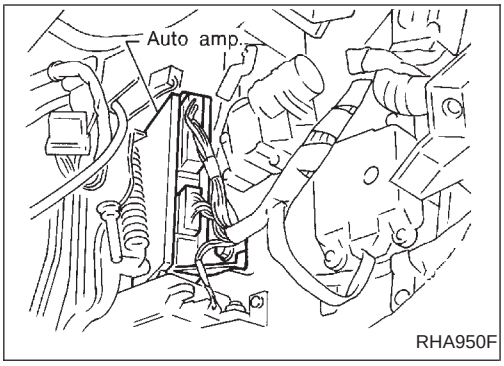


## Auto Amp. Terminals and Reference Value

### INSPECTION OF AUTO AMP.

- Measure voltage between each terminal and body ground by following “AUTO AMP. INSPECTION TABLE”.

- Pin connector terminal layout

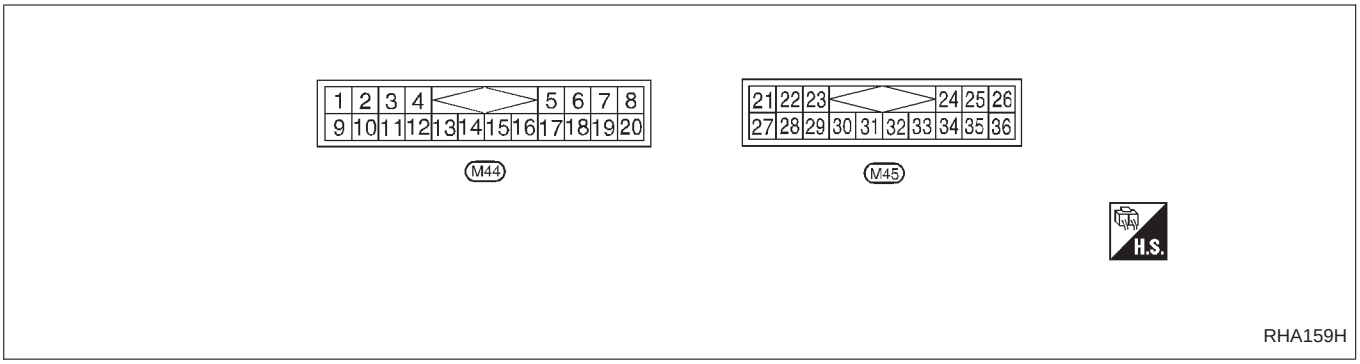

## Auto Amp. Terminals and Reference Value (Cont'd)

### AUTO AMP. INSPECTION TABLE

| TERMINAL NO. | ITEM | CONDITION | | | Voltage V |
|---|---|---|---|---|---|
| 1 | Intake sensor | — | | | — |
| 2 | Ambient sensor | — | | | — |
| 3 | In-vehicle sensor | — | | | — |
| 4 | Vehicle speed sensor | ON | When moving vehicle at 2 to 3 km/h (1 to 2 MPH). | | Varies from 0 to 5 |
| 5 | Rear window defogger | ON | Defogger switch | ON | Approximately 12 |
| | | | | OFF | Approximately 0 |
| 6 | Intake door position switch | ON | Intake door position | FRESH or 20% FRESH | Approximately 0 |
| | | | | RECIRCULATION | Approximately 4.6 |
| 7 | Multiplex communication (TX) signal | — | | | — |
| 8 | Multiplex communication (RX) signal | — | | | — |
| 9 | Sensor ground | ON | — | | Approximately 0 |
| 10 | Sunload sensor | — | | | — |
| 11 | Thermal transmitter | ON | Engine coolant temperature | Approximately 56°C (133°F) | Approximately 9.8 |
| | | | | Approximately 80°C (176°F) | Approximately 7 - 8 |
| | | | | Approximately 105°C (221°F) | Approximately 2.2 |
| 12 | Ground (for Canada) | | — | | Approximately 0 |
| 14 | A/C LAN signal | | — | | — |
| 15 | Power supply for rear vent door motor | | Mode switch: VENT | Set temperature: 18°C (65°F) | Approximately 0 |
| | | | Except above | | Approximately 12 |
| 16 | | | Mode switch: VENT | Set temperature: 18°C (65°F) | Approximately 12 |
| | | | Except above | | Approximately 0 |
| 18 | Intake door position switch | | Intake door position | 20% FRESH or RECIRCULATION | Approximately 0 |
| | | | | FRESH | Approximately 4.6 |
| 19 | Intake door position switch | | Intake door position | FRESH or RECIRCULATION | Approximately 0 |
| | | | | 20% FRESH | Approximately 4.6 |
| 20 | Multiplex communication (CLK) signal | — | | | — |
| 21 | Power supply for mode door motor, air mix door motor and bi-level door motor | ON | — | | Approximately 12 |
| 22 | Compressor ON signal | | Compressor | ON | Approximately 0 |
| | | | | OFF | Approximately 4.6 |
| 23 | IACV-FICD solenoid valve | ON | Ambient air temperature | Above 23.5°C (74.3°F) | Approximately 0 |
| | | | | Below 20.5°C (68.9°F) | Approximately 12 |
| 24 | Power supply for BAT. | OFF | — | | Approximately 12 |
| 25 | Power supply for IGN. | ON | — | | Approximately 12 |
| 26 | Power supply for intake door motor | | Recirculation switch | OFF → ON | *1 |
| 32 | Ground | | — | | Approximately 0 |

## Auto Amp. Terminals and Reference Value (Cont'd)

| TERMINAL NO. | ITEM | CONDITION | | | Voltage V |
|---|---|---|---|---|---|
| 33 | Power source for ACC | ACC | — | | Approximately 12 |
| 34 | Blower motor feed back | ON | Fan speed: Low | | Approximately 7 |
| 35 | Fan control AMP. control signal | ON | Fan speed | Low, Middle low or Middle high | Approximately 2.5 - 3.0 |
| | | | | High | Approximately 9.0 |
| 36 | Power supply for intake door motor | ON | Recirculation switch | ON → OFF | *1 |

*1: When the motor is working, approx. 0V will be indicated. When the motor stops, approx. 12V will exist.

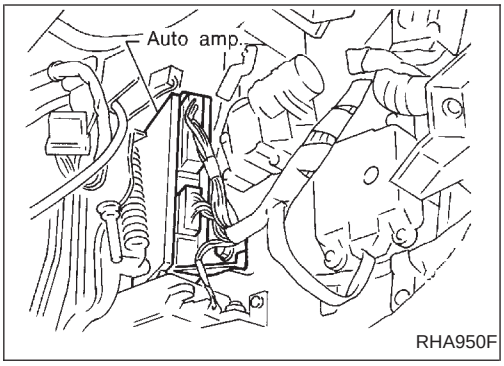


## Main Power Supply and Ground Circuit Check

### COMPONENT DESCRIPTION

#### Automatic amplifier (Auto amp.)

The auto amplifier has a built-in microcomputer which processes information sent from various sensors needed for air conditioner operation. The mode door motor (LCU), air mix door motor (LCU) and bi-level door motor (LCU), intake door motor, blower motor, rear vent door motor and compressor are then controlled.
The auto amplifier is unitized with control mechanisms. Signals from various switches and Potentio Temperature Control (PTC) are directly entered into auto amplifier.
Self-diagnostic functions are also built into auto amplifier to provide quick check of malfunctions in the auto air conditioner system.

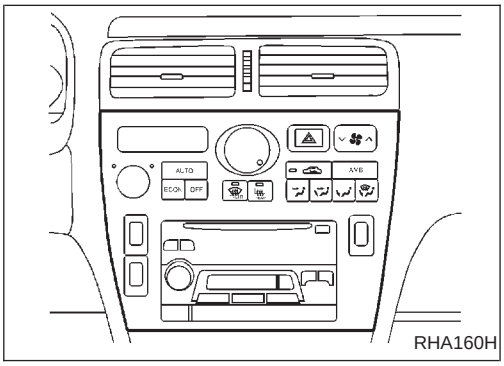


#### A/C control unit

By means of multiplex communication, the A/C control unit sends signals to the auto amp. the switch position and display mode.

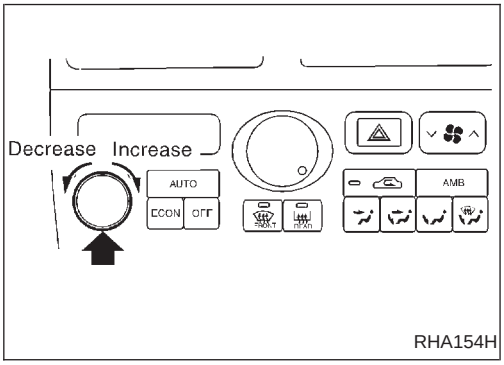


#### Potentio temperature control (PTC)

The PTC is built into the A/C control unit. It can be set at an interval of 0.5°C (1.0°F) in the 18°C (65°F) to 32°C (85°F) temperature range by rotating the temperature dial. The set temperature is digitally displayed.

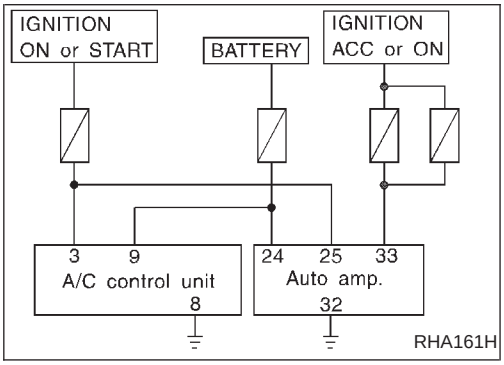


### DIAGNOSTIC PROCEDURE

## Main Power Supply and Ground Circuit Check (Cont'd)

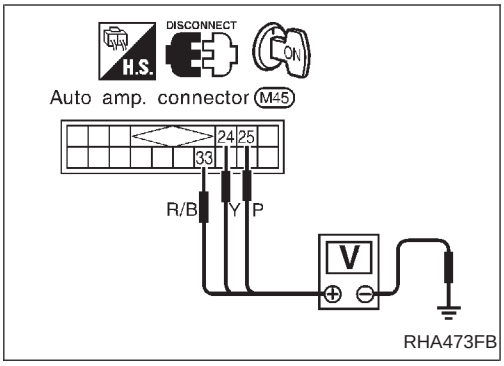


### Auto amp. check

Check power supply circuit for auto amp. with ignition switch ON.
Measure voltage across terminal Nos. ㉔ , ㉕ , ㉝ and body ground.

| Voltmeter terminal | | Voltage |
|---|---|---|
| ⊕ | ⊖ | |
| ㉔ | Body ground | Approx. 12V |
| ㉕ | | |
| ㉝ | | |

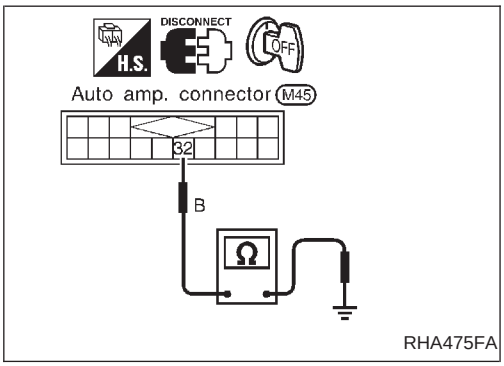


Check body ground circuit for auto amp. with ignition switch OFF.
Check for continuity between terminal No. ㉜ and body ground.

| Ohmmeter terminal | | Continuity |
|---|---|---|
| ⊕ | ⊖ | |
| ㉜ | Body ground | Yes |

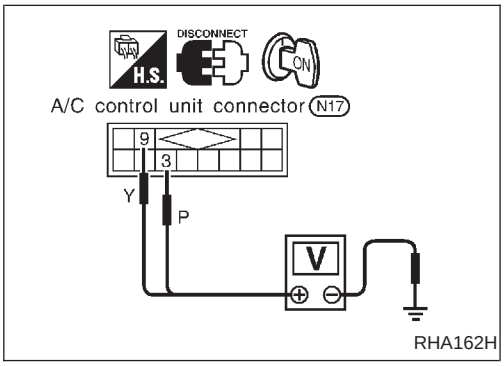


### A/C control unit check

Check power supply circuit for A/C control unit with ignition switch ON.
Measure voltage across terminal Nos. ③ , ⑨ and body ground.

| Voltmeter terminal | | Voltage |
|---|---|---|
| ⊕ | ⊖ | |
| ③ | Body ground | Approx. 12V |
| ⑨ | | |

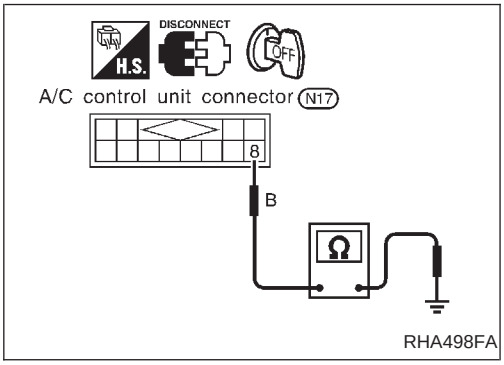


Check body ground circuit for A/C control unit with ignition switch OFF.
Check for continuity between terminal No. ⑧ and body ground.

| Ohmmeter terminal | | Continuity |
|---|---|---|
| ⊕ | ⊖ | |
| ⑧ | Body ground | Yes |

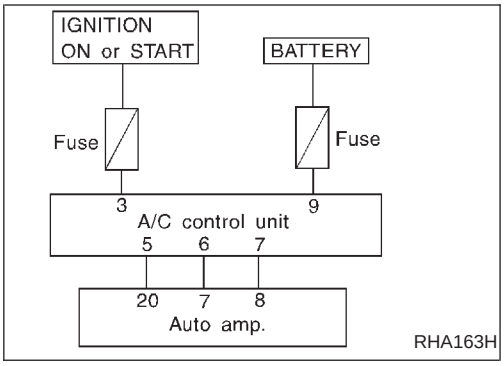


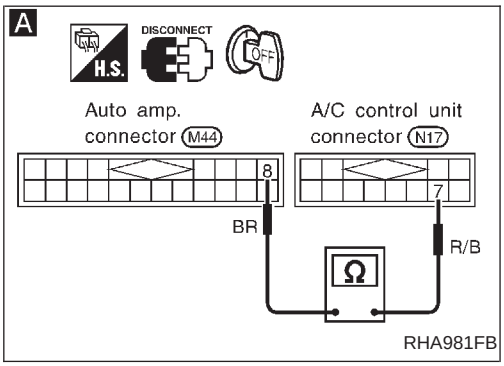


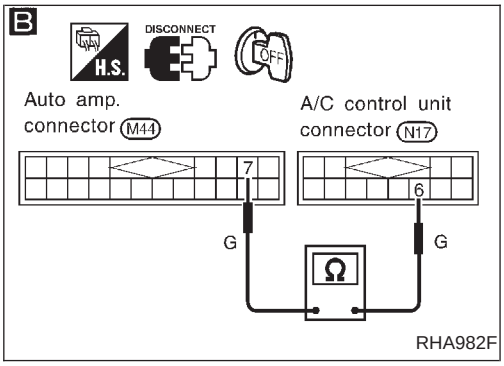


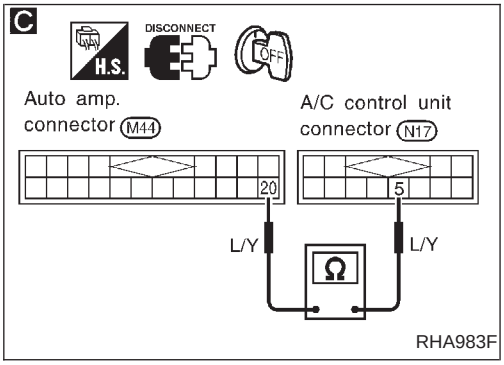


## Self-diagnosis Circuit

### DIAGNOSTIC PROCEDURE

For description of self-diagnosis, refer to HA-37.

**SYMPTOM:**
- **Self-diagnosis cannot be performed.**
- **Multiplex communication circuit is open or shorted. (52 or 52 is indicated on the display as a result of conducting self-diagnosis STEP 5.)**

CHECK MAIN POWER SUPPLY AND GROUND CIRCUIT FOR AUTO AMP. (Refer to HA-87.)

NG → Repair Main Power Supply and Ground Circuit.

OK ↓

**A** Note

Check circuit continuity between auto amp. harness terminal No. ⑧ and A/C control unit harness terminal No. ⑦ .
**Continuity should exist.**
If OK, check harness for short.

OK ↓

**B** Note

Check circuit continuity between auto amp. harness terminal No. ⑦ and A/C control unit harness terminal No. ⑥ .
**Continuity should exist.**
If OK, check harness for short.

OK ↓

**C** Note

Check circuit continuity between auto amp. harness terminal No. ⑳ and A/C control unit harness terminal No. ⑤ .
**Continuity should exist.**
If OK, check harness for short.

OK ↓

Replace auto amp.

**Note:**
**If the result is NG or No after checking circuit continuity, repair harness or connector.**

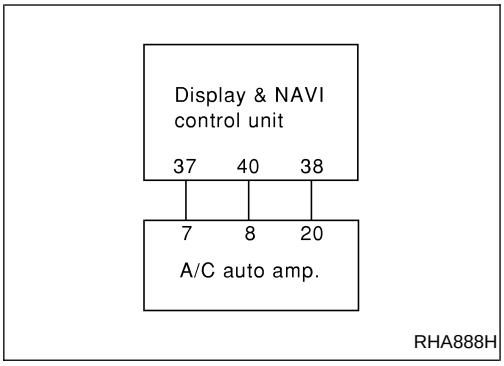


## Multiplex Communication Circuit

### DIAGNOSTIC PROCEDURE

**SYMPTOM:**

- **A/C system does not come on.**
- **A/C system can not controlled.**

| 1 | CHECK CIRCUIT CONTINUITY BETWEEN DISPLAY & NAVI CONTROL UNIT AND AUTO AMP. |
|---|---|

Check circuit continuity between each terminal on Display & Navigation control unit and on auto amp.

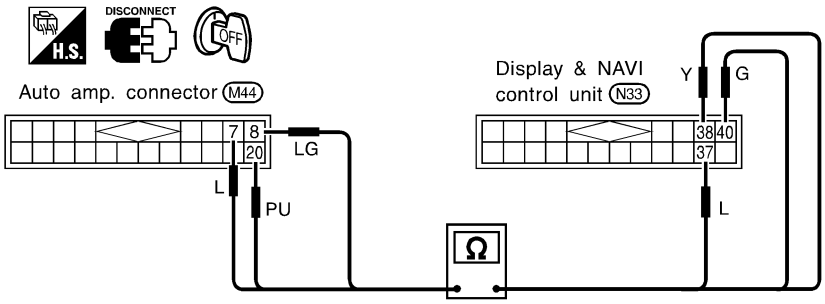


**Continuity should exist.**
If OK, check harness for short.

**OK or NG**

| | | |
|---|---|---|
| OK | ▶ | GO TO 2. |
| NG | ▶ | 1. Repair harness or connector.<br>2. Go to “OPERATIONAL CHECK”, HA-33.<br>Confirm that A/C system is in good order. |

| 2 | CHECK MULTI-PLEX COMMUNICATION SIGNAL |
|---|---|

Do approx. 3.5 volts exist between Display & NAVI control unit harness terminal Nos. 37, 38 and body ground?

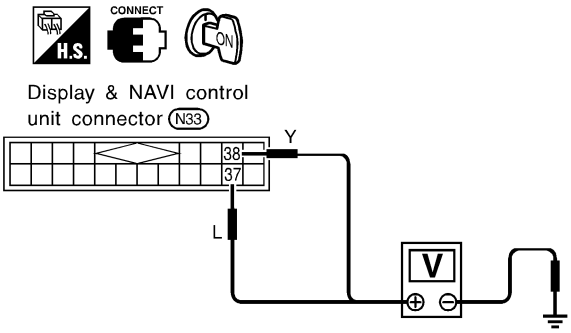


**Yes or No**

| | | |
|---|---|---|
| Yes | ▶ | GO TO 3. |
| No | ▶ | 1. Replace auto amp.<br>2. Go to “OPERATIONAL CHECK”, HA-33.<br>Confirm that A/C system is in good order. |

| 3 | CHECK MULTIPLEX COMMUNICATION SIGNAL |
|---|---|
| Do approx. 3.5 volts exist between auto amp. harness terminal No. 40 and body ground? | |

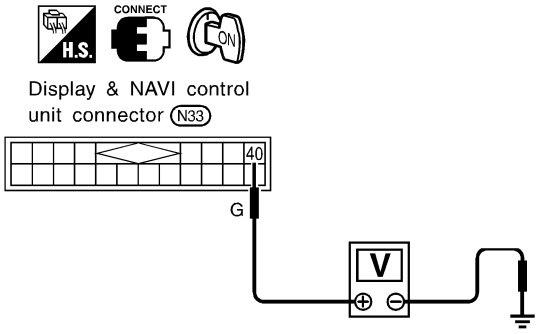


RHA891HA

**Yes or No**

| | | |
|---|---|---|
| Yes | ▶ | INSPECTION END. |
| No | ▶ | 1. Replace Display & NAVI control unit.<br>2. Go to "OPERATIONAL CHECK", HA-33.<br>Confirm that A/C system is in good order. |

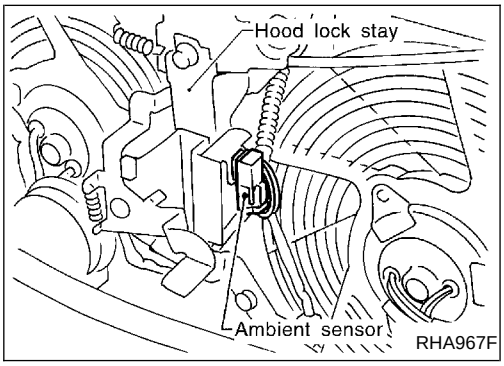


## Ambient Sensor Circuit

### COMPONENT DESCRIPTION

The ambient sensor is attached in front of the driver's side condenser. It detects ambient temperature and converts it into a resistance value which is then input to the auto amplifier.

### AMBIENT TEMPERATURE INPUT PROCESS

The automatic amplifier includes a "processing circuit" for the ambient sensor input. However, when the temperature detected by the ambient sensor increases quickly, the processing circuit retards the auto amp. function. It only allows the auto amp. to recognize an ambient temperature increase of 0.33°C (0.6°F) per 100 seconds. As an example, consider stopping for a cup of coffee after high speed driving. Although the actual ambient temperature has not changed, the temperature detected by the ambient sensor will increase. This is because the heat from the engine compartment can radiate to the front grille area, location of the ambient sensor.

## Ambient Sensor Circuit (Cont'd)

### DIAGNOSTIC PROCEDURE

**SYMPTOM: Ambient sensor circuit is open or shorted. (21 or −21 appears on the display as a result of conducting Self-diagnosis STEP 2.)**

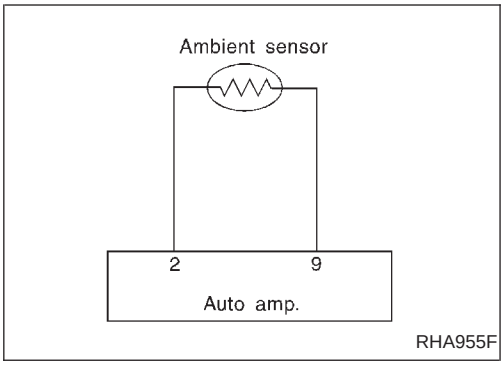


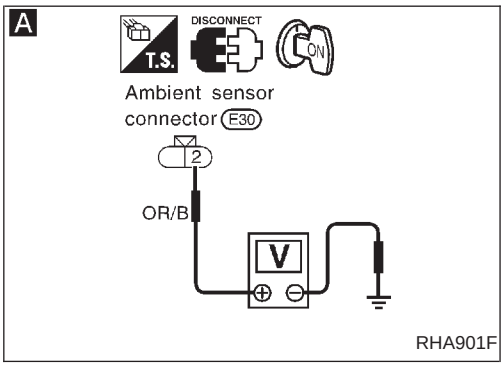


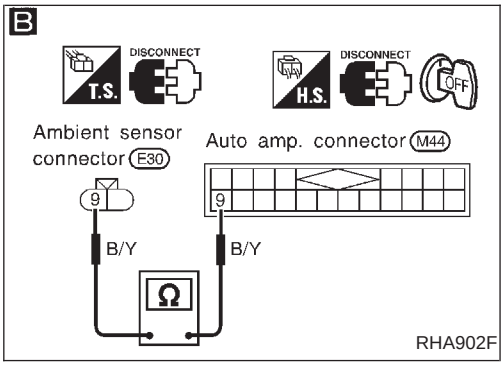


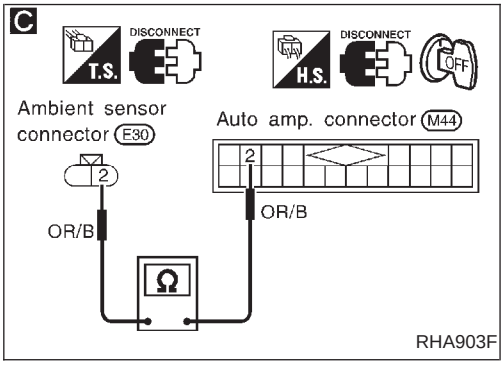


**A**

CHECK AMBIENT SENSOR CIRCUIT BETWEEN AMBIENT SENSOR AND AUTO AMP.
Disconnect ambient sensor harness connector.
Do approx. 5 volts exist between ambient sensor harness terminal No. ② and body ground?

No → Disconnect auto amp. harness connector. → **C**

Yes → Disconnect auto amp. harness connector. → **B**

**C** Note

Check circuit continuity between ambient sensor harness terminal No. ② and auto amp. harness terminal No. ② .
**Continuity should exist.**
If OK, check harness for short.

OK → Replace auto amp.

**B** Note

Check circuit continuity between ambient sensor harness terminal No. ⑨ and auto amp. harness terminal No. ⑨ .
**Continuity should exist.**
If OK, check harness for short.

OK → CHECK AMBIENT SENSOR. (Refer to HA-92.)

NG → Replace ambient sensor.

OK → Replace auto amp.

**Note:**
**If the result is NG or No after checking circuit continuity, repair harness or connector.**

## Ambient Sensor Circuit (Cont'd)

### COMPONENT INSPECTION

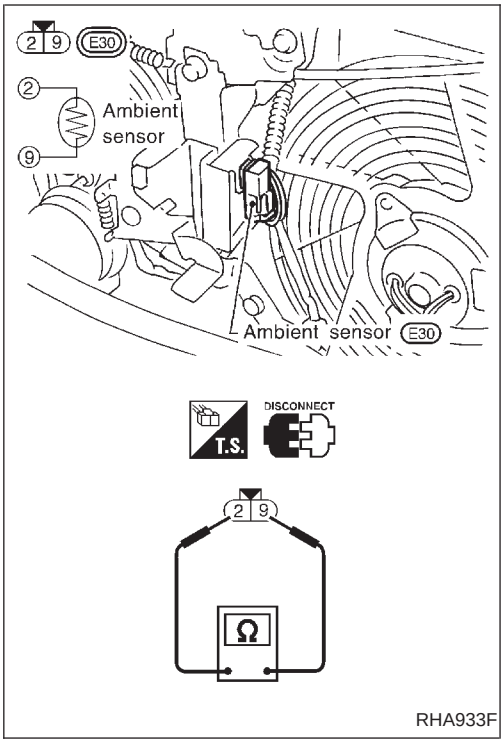


### Ambient sensor

After disconnecting ambient sensor harness connector, measure resistance between terminals ⑨ and ② at sensor harness side, using the table below.

| Temperature °C (°F) | Resistance kΩ |
|---|---|
| −35 (−31) | 38.35 |
| −30 (−22) | 28.62 |
| −25 (−13) | 21.61 |
| −20 (−4) | 16.50 |
| −15 (5) | 12.73 |
| −10 (14) | 9.92 |
| −5 (23) | 7.80 |
| 0 (32) | 6.19 |
| 5 (41) | 4.95 |
| 10 (50) | 3.99 |
| 15 (59) | 3.24 |
| 20 (68) | 2.65 |
| 25 (77) | 2.19 |
| 30 (86) | 1.81 |
| 35 (95) | 1.51 |
| 40 (104) | 1.27 |
| 45 (113) | 1.07 |
| 50 (122) | 0.91 |
| 55 (131) | 0.77 |
| 60 (140) | 0.66 |
| 65 (149) | 0.57 |

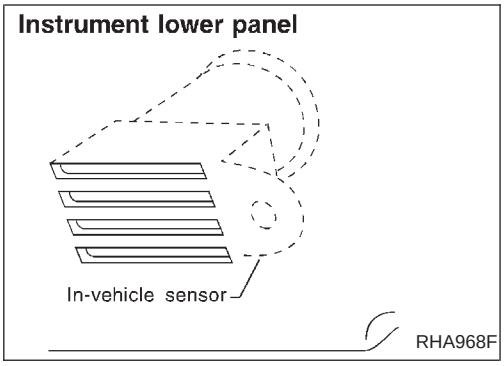


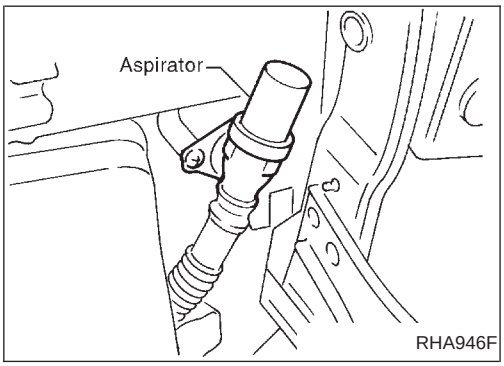


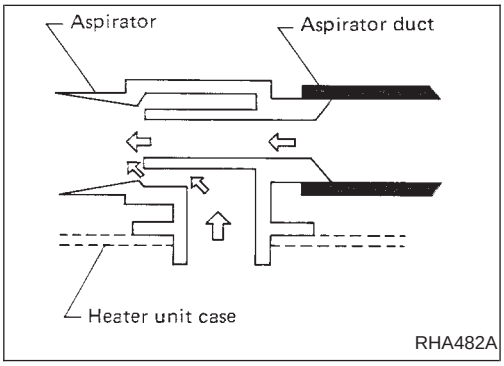


## In-vehicle Sensor Circuit

### COMPONENT DESCRIPTION

#### In-vehicle sensor

The in-vehicle sensor is located on instrument lower panel. It converts variations in temperature of compartment air drawn from the aspirator into a resistance value. It is then input into the auto amplifier.

#### Aspirator

The aspirator is located in front of heater unit. It produces vacuum pressure due to air discharged from the heater unit, continuously taking compartment air in the aspirator.

## In-vehicle Sensor Circuit (Cont'd)

### DIAGNOSTIC PROCEDURE

**SYMPTOM: In-vehicle sensor circuit is open or shorted. (22 or −22 appears on the display as a result of conducting Self-diagnosis STEP 2.)**

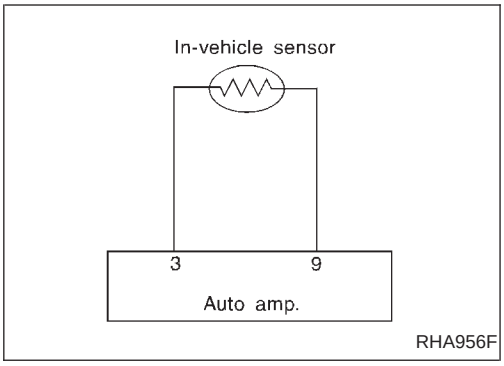


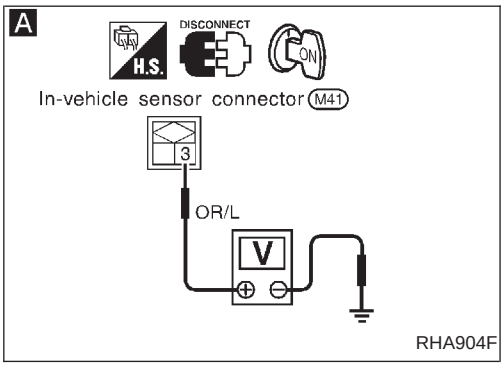


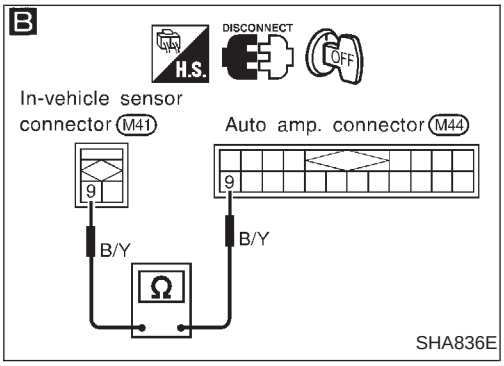


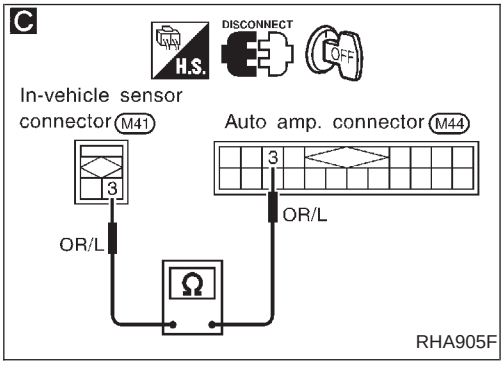


**A**

CHECK IN-VEHICLE SENSOR CIRCUIT BETWEEN IN-VEHICLE SENSOR AND AUTO AMP.
Disconnect in-vehicle sensor harness connector.
Do approx. 5 volts exist between in-vehicle sensor harness terminal No. ③ and body ground?

No → Disconnect auto amp. harness connector.

**C** Note

Check circuit continuity between in-vehicle sensor harness terminal No. ③ and auto amp. harness terminal No. ③ .
**Continuity should exist.**
If OK, check harness for short.

OK → Replace auto amp.

Yes → Disconnect auto amp. harness connector.

**B** Note

Check circuit continuity between in-vehicle sensor harness terminal No. ⑨ and auto amp. harness terminal No. ⑨ .
**Continuity should exist.**
If OK, check harness for short.

OK →

CHECK IN-VEHICLE SENSOR.
(Refer to HA-95.)

NG → Replace in-vehicle sensor.

OK → Replace auto amp.

**Note:**
**If the result is NG or No after checking circuit continuity, repair harness or connector.**

## In-vehicle Sensor Circuit (Cont'd)

### COMPONENT INSPECTION

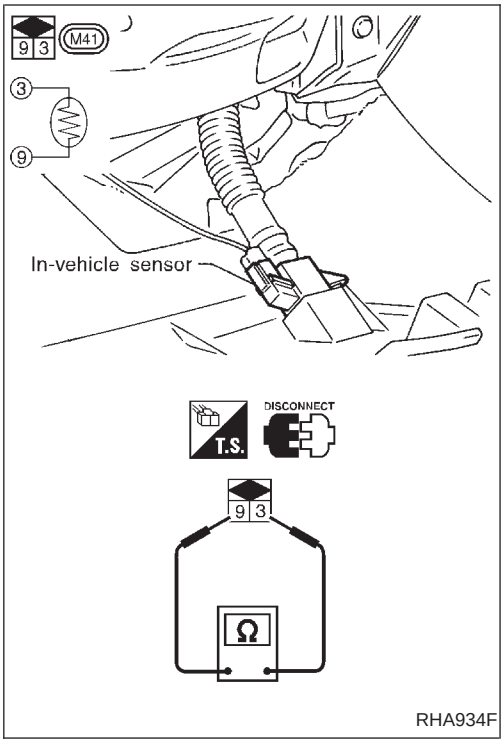


### In-vehicle sensor

After disconnecting in-vehicle sensor harness connector, measure resistance between terminals ③ and ⑨ at sensor harness side, using the table below.

| Temperature °C (°F) | Resistance kΩ |
|---|---|
| −35 (−31) | 38.35 |
| −30 (−22) | 28.62 |
| −25 (−13) | 21.61 |
| −20 (−4) | 16.50 |
| −15 (5) | 12.73 |
| −10 (14) | 9.92 |
| −5 (23) | 7.80 |
| 0 (32) | 6.19 |
| 5 (41) | 4.95 |
| 10 (50) | 3.99 |
| 15 (59) | 3.24 |
| 20 (68) | 2.65 |
| 25 (77) | 2.19 |
| 30 (86) | 1.81 |
| 35 (95) | 1.51 |
| 40 (104) | 1.27 |
| 45 (113) | 1.07 |
| 50 (122) | 0.91 |
| 55 (131) | 0.77 |
| 60 (140) | 0.66 |
| 65 (149) | 0.57 |

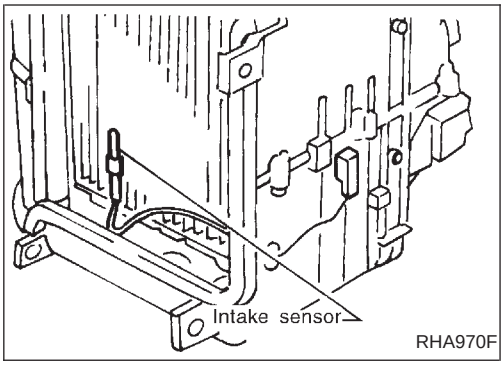


## Intake Sensor Circuit

### COMPONENT DESCRIPTION

The intake sensor is located on the cooling unit. It converts temperature of air after it passes through the evaporator into a resistance value. The value is then input to the auto amplifier.

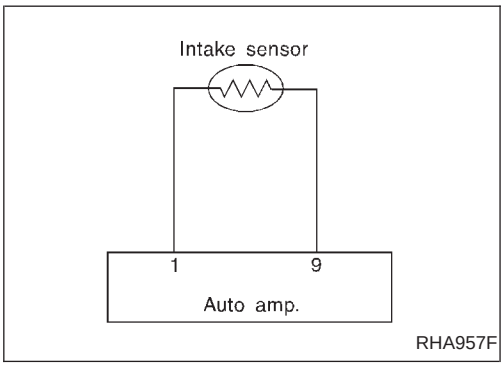


### DIAGNOSTIC PROCEDURE

**SYMPTOM: Intake sensor circuit is open or shorted. (24 or –24 appears on the display as a result of conducting Self-diagnosis STEP 2.)**

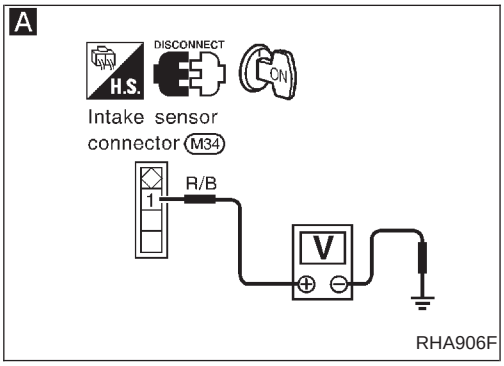


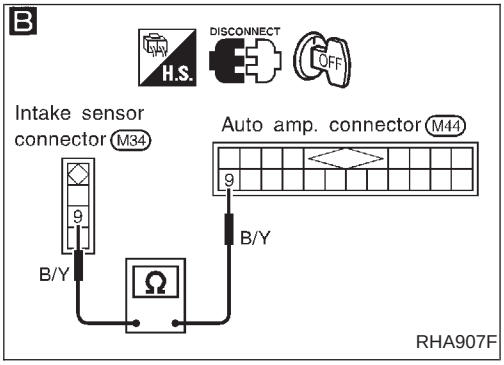


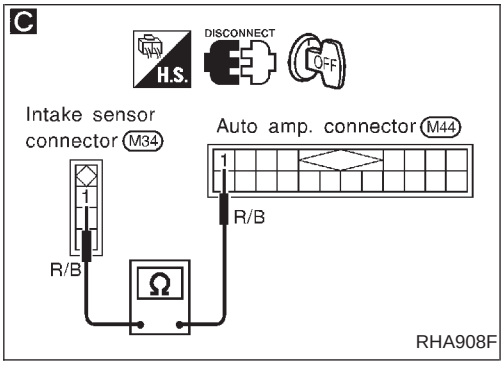


**A**

CHECK INTAKE SENSOR CIRCUIT BETWEEN INTAKE SENSOR AND AUTO AMP.
Disconnect intake sensor harness connector.
Do approx. 5 volts exist between intake sensor harness terminal No. ① and body ground?

→ No → Disconnect auto amp. harness connector. → **C**

Yes ↓

Disconnect auto amp. harness connector.

**B**

Note

Check circuit continuity between intake sensor harness terminal No. ⑨ and auto amp. harness terminal No. ⑨.
**Continuity should exist.**
If OK, check harness for short.

OK ↓

CHECK INTAKE SENSOR.
(Refer to HA-97.)

→ NG → Replace intake sensor.

OK ↓

Replace auto amp.

**C**

Note

Check circuit continuity between intake sensor harness terminal No. ① and auto amp. harness terminal No. ①.
**Continuity should exist.**
If OK, check harness for short.

OK ↓

Replace auto amp.

**Note:**
**If the result is NG or No after checking circuit continuity, repair harness or connector.**

## Intake Sensor Circuit (Cont'd)

### COMPONENT INSPECTION

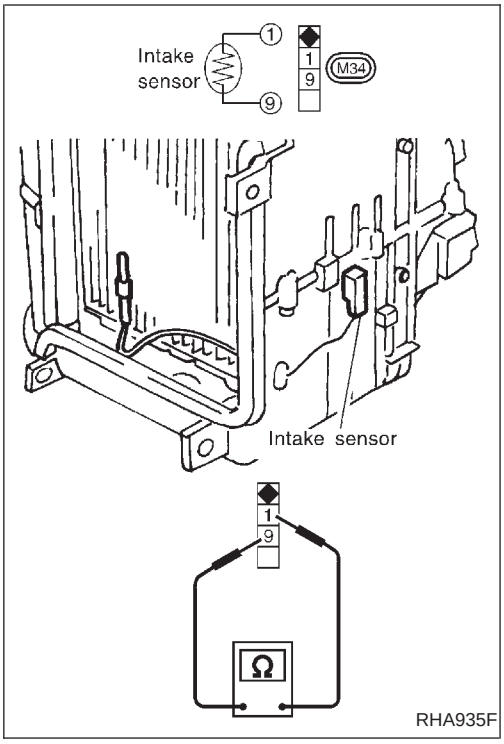


#### Intake sensor

After disconnecting intake sensor harness connector, measure resistance between terminals ① and ⑨ at sensor harness side, using the table below.

| Temperature °C (°F) | Resistance kΩ |
|---|---|
| −20 (−4) | 16.2 |
| −10 (14) | 9.8 |
| 0 (32) | 6.0 |
| 10 (50) | 3.94 |
| 20 (68) | 2.64 |
| 25 (77) | 2.12 |
| 30 (86) | 1.82 |
| 40 (104) | 1.27 |

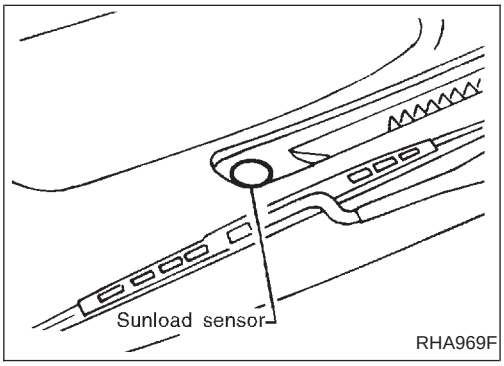


## Sunload Sensor Circuit

### COMPONENT DESCRIPTION

The sunload sensor is located on the right defroster grille. It detects sunload entering through windshield by means of a photo diode. The sensor converts the sunload into a current value which is then input to the auto amplifier.
Measure voltage between auto amp. terminal ⑩ and body ground.

### SUNLOAD INPUT PROCESS

The auto amp. also includes a processing circuit which "average" the variations in detected sunload over a period of time. This prevents drastic swings in the ATC system operation due to small or quick variations in detected sunload.
For example, consider driving along a road bordered by an occasional group of large trees. The sunload detected by the sunload sensor will vary whenever the trees obstruct the sunlight. The processing circuit averages the detected sunload over a period of time, so that the (insignificant) effect of the trees momentarily obstructing the sunlight does not cause any change in the ATC system operation. On the other hand, shortly after entering a long tunnel, the system will recognize the change in sunload, and the system will react accordingly.

## Sunload Sensor Circuit (Cont'd)

### DIAGNOSTIC PROCEDURE

**SYMPTOM: Sunload sensor circuit is open or shorted. (25 or −25 appears on the display as a result of conducting Self-diagnosis STEP 2.)**

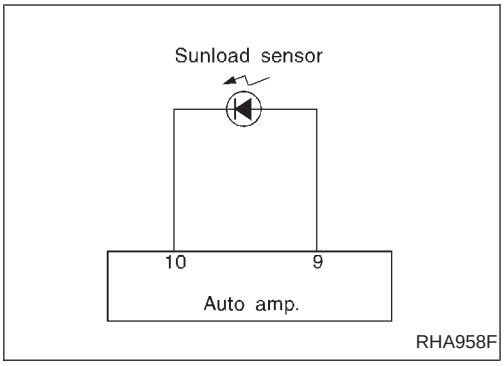


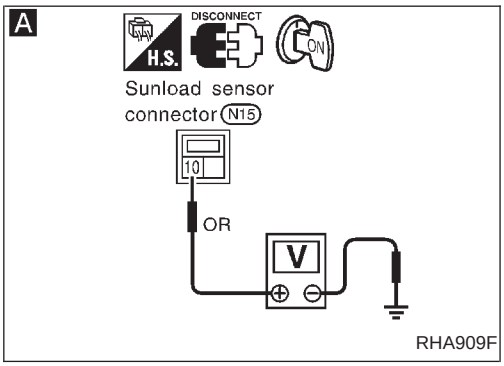


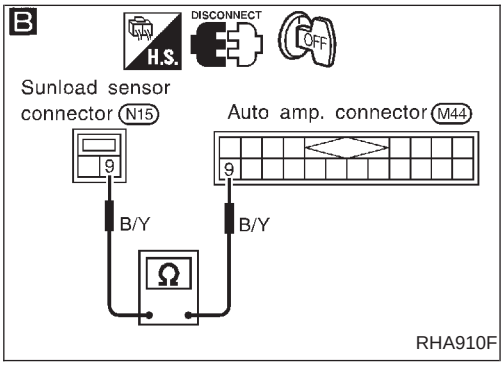


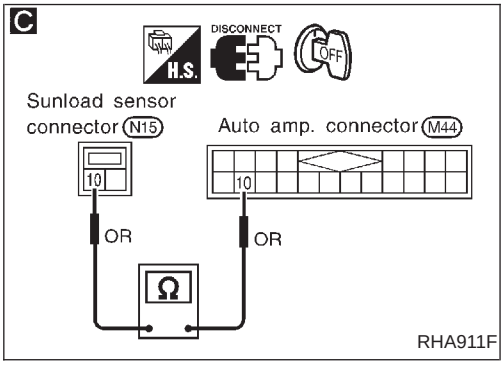


**A**

CHECK SUNLOAD SENSOR CIRCUIT BETWEEN SUNLOAD SENSOR AND AUTO AMP.
Disconnect sunload sensor harness connector.
Do approx. 5 volts exist between sunload sensor harness terminal No. ⑩ and body ground?

No → Disconnect auto amp. harness connector.

**C** Note

Check circuit continuity between sunload sensor harness terminal No. ⑩ and auto amp. harness terminal No. ⑩.
**Continuity should exist.**
If OK, check harness for short.

OK → Replace auto amp.

Yes → Disconnect auto amp. harness connector.

**B** Note

Check circuit continuity between sunload sensor harness terminal No. ⑨ and auto amp. harness terminal No. ⑨.
**Continuity should exist.**
If OK, check harness for short.

OK → CHECK SUNLOAD SENSOR. (Refer to HA-99.)

NG → Replace sunload sensor.

OK → Replace auto amp.

**Note:**
**If the result is NG or No after checking circuit continuity, repair harness or connector.**

## Sunload Sensor Circuit (Cont'd)

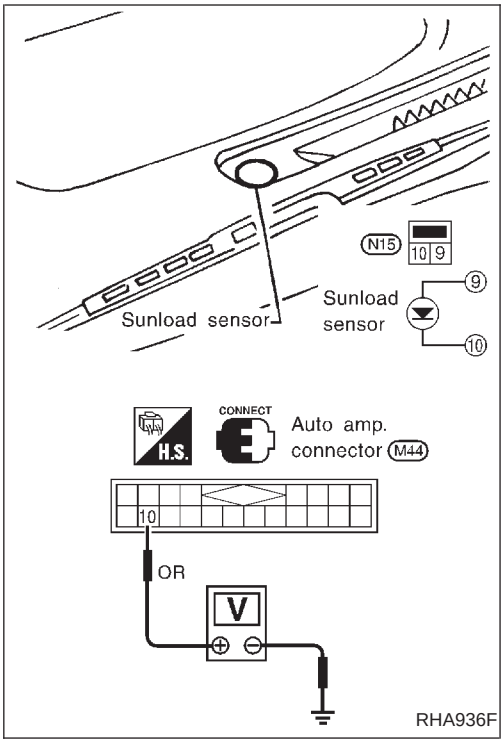


### COMPONENT INSPECTION

#### Sunload sensor

- **When checking sunload sensor, select a place where sun shines directly on it.**

#### Sunload sensor characteristic curve

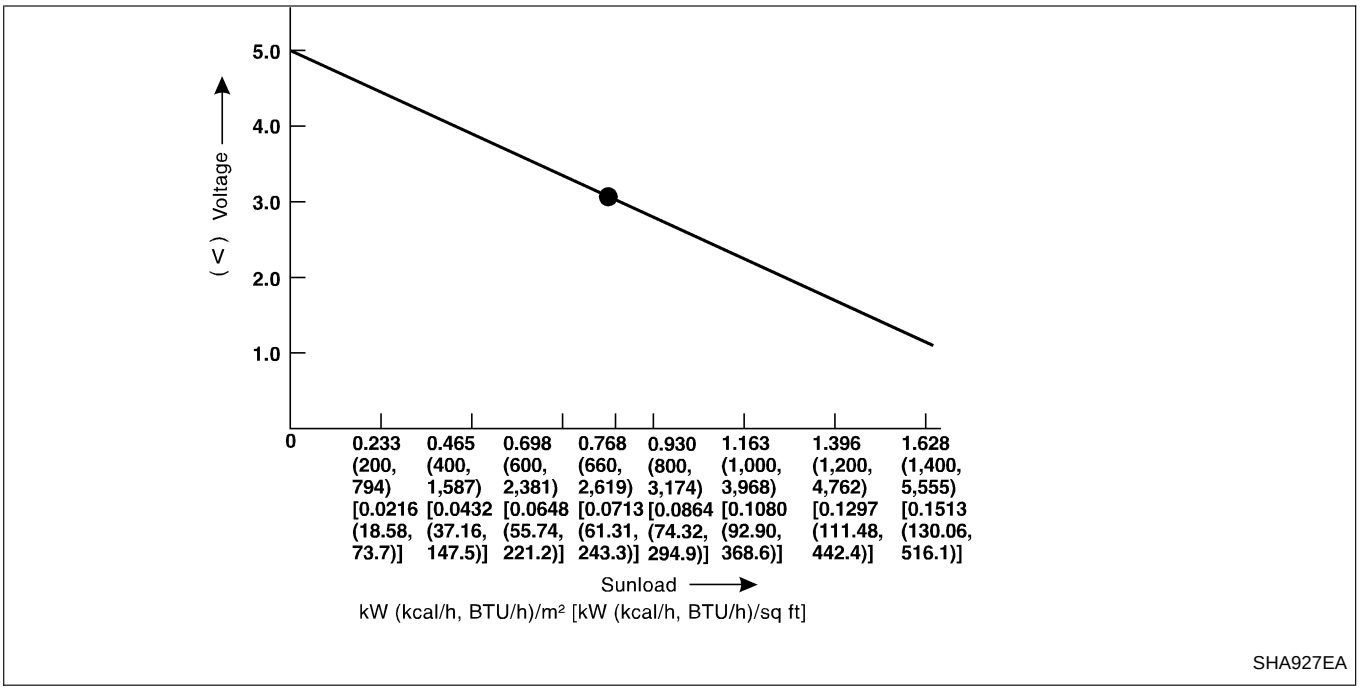

# Mode Door Motor Circuit (LAN)

## SYSTEM DESCRIPTION

### Component parts

Mode door control system components are:
1) Auto amp.
2) Mode door motor (LCU: Local Control Unit)
3) In-vehicle sensor
4) Ambient sensor
5) Sunload sensor
6) Intake sensor

### System operation

The auto amplifier receives data from each of the sensors. The amplifier sends mode door, air mix door, bi-level door motor LCU opening angle data to the mode door motor LCU, air mix door motor LCU and bi-level motor LCU.
The mode door motor, air mix door motor and bi-level door motor read their respective signals according to the address signal. Opening angle indication signals received from the auto amplifier and each of the motor position sensors are compared by the LCUs in each motor with the existing decision and opening angles. Subsequently, HOT/COLD or DEFROST/VENT or OPEN/CLOSE operation is selected. The new selection data is returned to the auto amplifier.

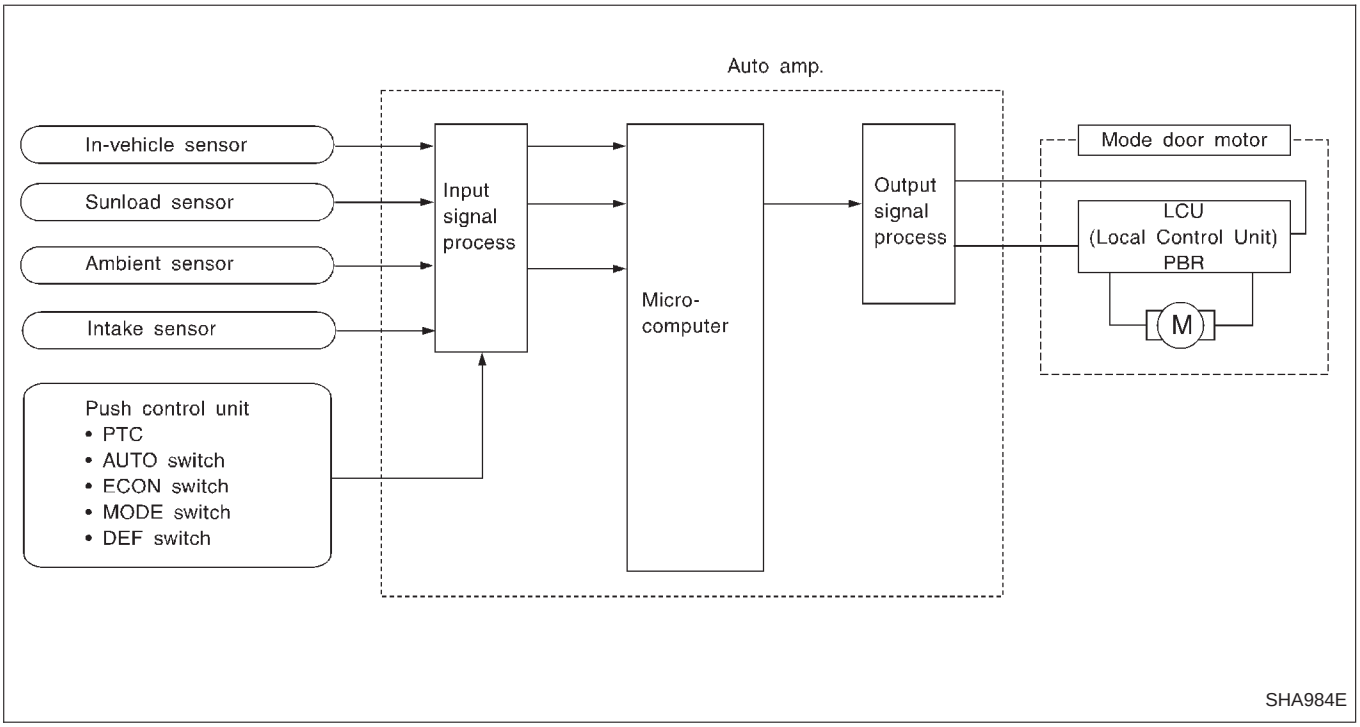


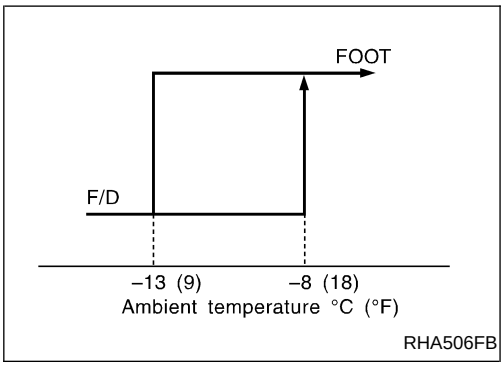


### FOOT/DEF mode specification

- When the ambient temperature decreases to −13°C (9°F), air outlet is changed from FOOT to F/D.
- When the ambient temperature increases to −8°C (18°F), air outlet is changed from F/D to FOOT.

## Mode Door Motor Circuit (LAN) (Cont'd)

### Mode door control specification

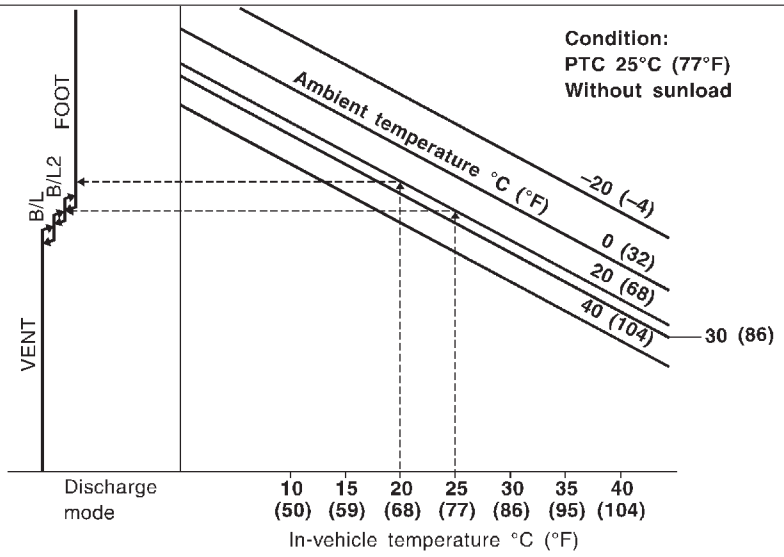


Example:
- Mode door is automatically set in FOOT position under the following no sunload conditions:
  1) Temperature set at 25°C (77°F).
  2) Ambient and in-vehicle temperatures are 20°C (68°F).
- Then in-vehicle temperature will lower. When target temperature 25°C (77°F) is reached, mode door will shift from B/L position to B/L2.

RHA976FA

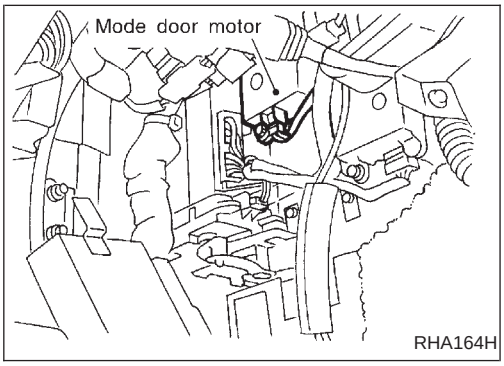


RHA164H

## COMPONENT DESCRIPTION

The mode door motor is attached to the heater unit. It rotates so that air is discharged from the outlet set by the auto amplifier. Motor rotation is conveyed to a link which activates the mode door and mode door position is fed back to the auto amplifier by the PBR built-in mode door motor (LCU).

## DIAGNOSTIC PROCEDURE

**SYMPTOM: If PBR circuit is open or shorted.**
**Perform diagnostic procedure for LAN system circuit. Refer to HA-106.**

# Air Mix Door Motor Circuit (LAN)

## SYSTEM DESCRIPTION

### Component parts

Air mix door control system components are:
1) Auto amp.
2) Air mix door motor (LCU: Local Control Unit)
3) In-vehicle sensor
4) Ambient sensor
5) Sunload sensor
6) Intake sensor

### System operation

The auto amplifier receives data from each of the sensors. The amplifier sends mode door, air mix door, bi-level door motor LCU opening angle data to the mode door motor LCU, air mix door motor LCU and bi-level motor LCU.
The mode door motor, air mix door motor and bi-level door motor read their respective signals according to the address signal. Opening angle indication signals received from the auto amplifier and each of the motor position sensors are compared by the LCUs in each motor with the existing decision and opening angles. Subsequently, HOT/COLD or DEFROST/VENT or OPEN/CLOSE operation is selected. The new selection data is returned to the auto amplifier.

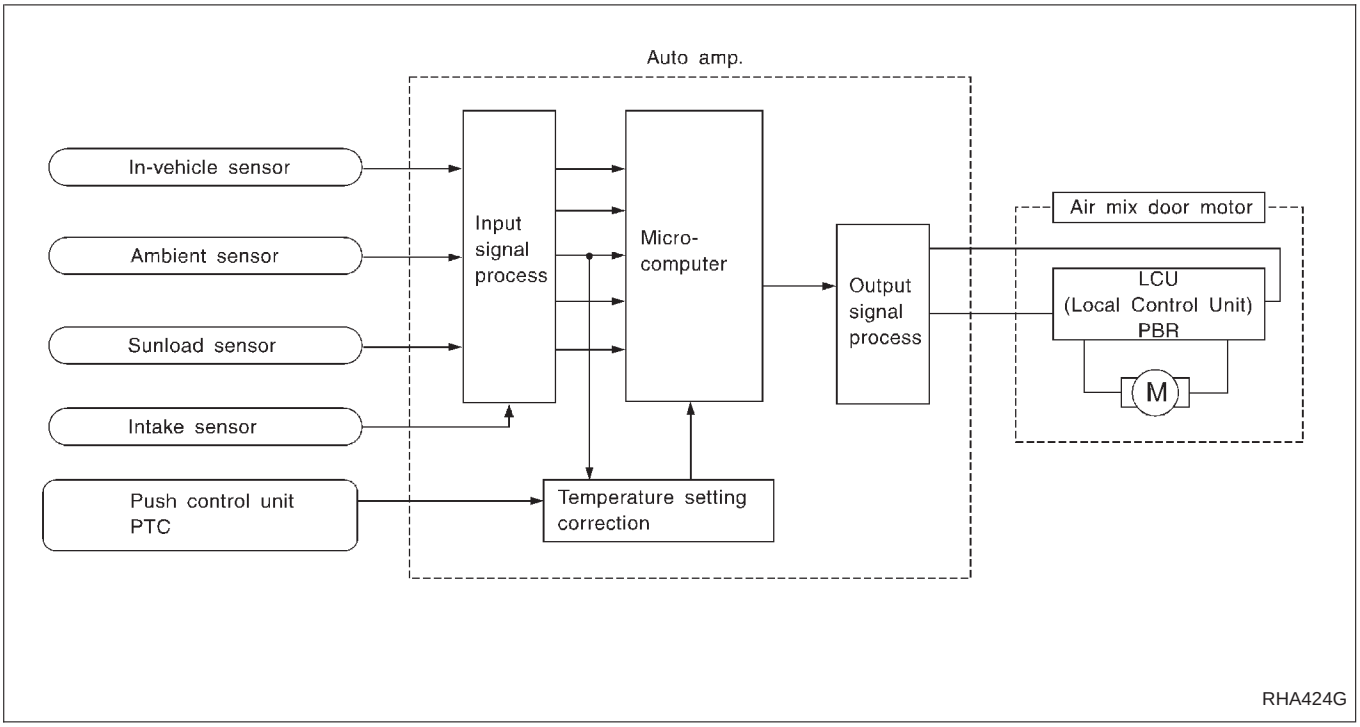

## Air Mix Door Motor Circuit (LAN) (Cont'd)

### Air mix door control specification

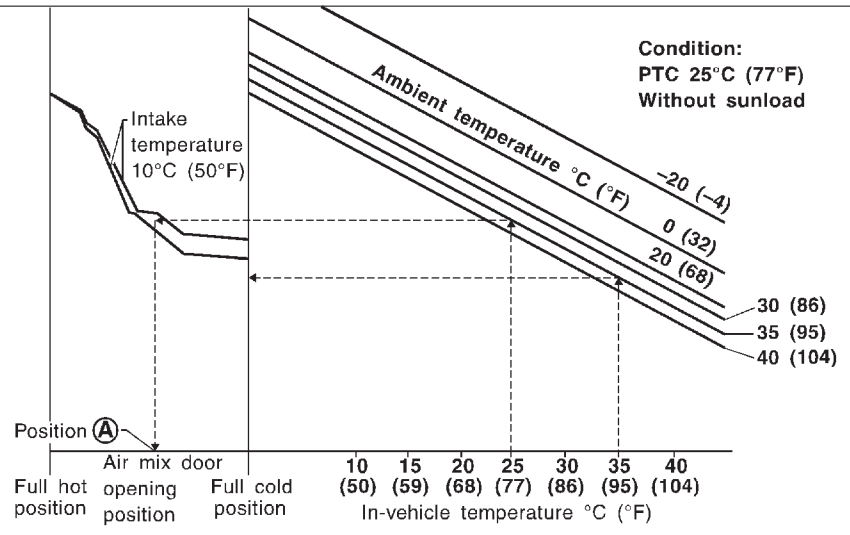


Example:

- Air mix door is initially automatically set in full cold position under the following no sunload conditions:
  1) Temperature set at 25°C (77°F).
  2) Ambient and in-vehicle temperature are 35°C (95°F),
- Within some period, in-vehicle temperature will lower towards the target temperature. Then the air mix door position will shift incrementally towards the hot side. It will finally stay in this position Ⓐ if intake temperature is 10°C (50°F).

Air mix door opening position is always fed back to auto amplifier by PBR built-in air mix door motor.

RHA978F

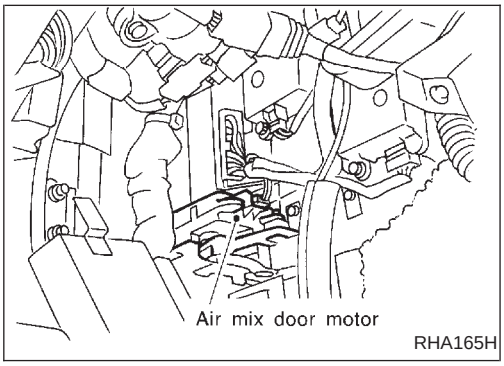


RHA165H

### COMPONENT DESCRIPTION

The air mix door motor is attached to the heater unit. It rotates so that the air mix door is opened or closed to a position set by the auto amplifier. Motor rotation is then conveyed through a shaft and the air mix door position is then fed back to the auto amplifier by PBR built-in air mix door motor (LCU).

### DIAGNOSTIC PROCEDURE

**SYMPTOM: If PBR circuit is open or shorted. (−26 or 26 appears on the display as a result of conducting Self-diagnosis STEP 2.)**

**Perform diagnostic procedure for LAN system circuit. Refer to HA-106.**

# Bi-level Door Motor Circuit (LAN)

## SYSTEM DESCRIPTION

### Component parts

Bi-level door control system components are:

1) Auto amplifier
2) Bi-level door motor (LCU: Local Control Unit)
3) In-vehicle sensor
4) Ambient sensor
5) Sunload sensor
6) Intake sensor
7) Control unit (PTC)

### System operation

The auto amplifier receives data from each of the sensors. The amplifier sends mode door, air mix door, bi-level door motor LCU opening angle data to the mode door motor LCU, air mix door motor LCU and bi-level motor LCU.

The mode door motor, air mix door motor and bi-level door motor read their respective signals according to the address signal. Opening angle indication signals received from the auto amplifier and each of the motor position sensors are compared by the LCUs in each motor with the existing decision and opening angles. Subsequently, HOT/COLD or DEFROST/VENT or OPEN/CLOSE operation is selected. The new selection data is returned to the auto amplifier.

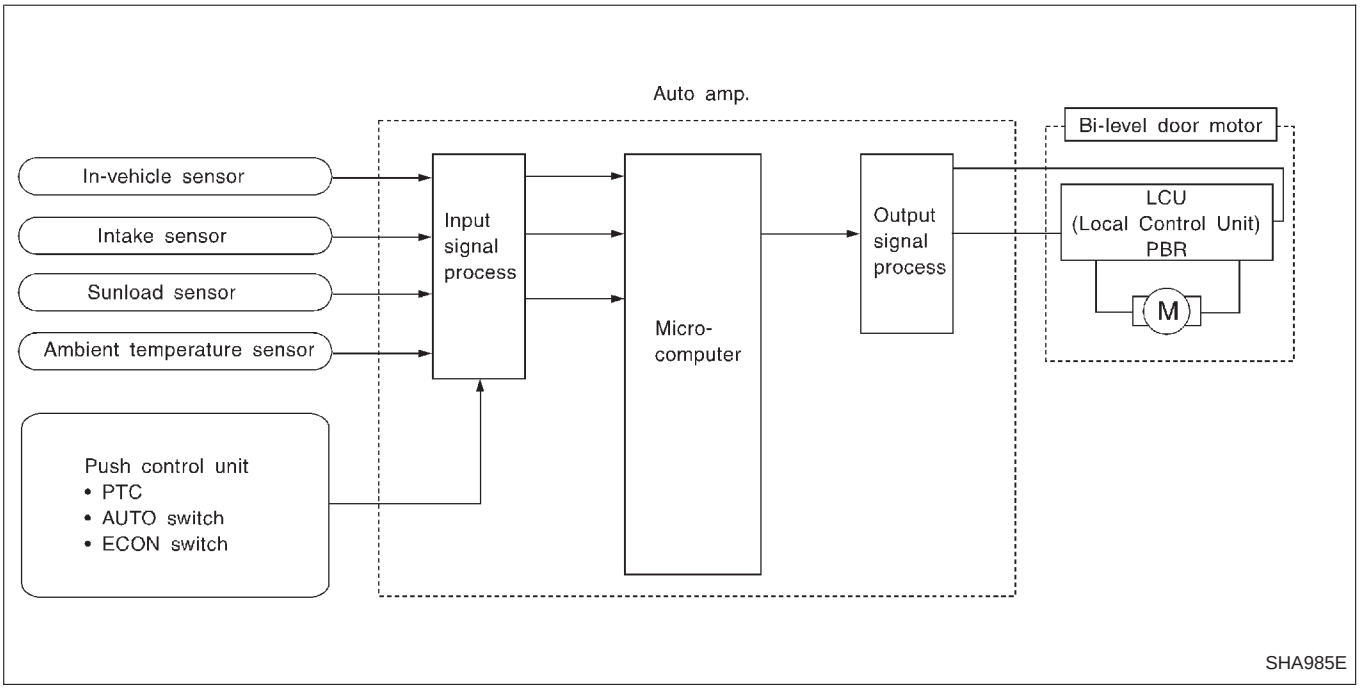


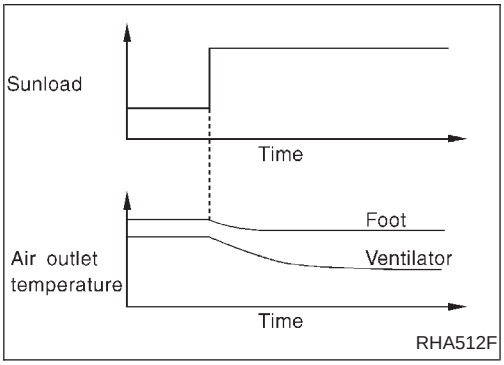


When the amount of sunload suddenly changes, the extra heat caused by sunload is counteracted by adjusting the air outlet temperature, but leaving the temperature around foot area as it is.

## Bi-level Door Motor Circuit (LAN) (Cont'd)

In FOOT mode, bi-level door is controlled according to blower operation. When blower is operating, auto amplifier automatically computes target DEF vent air temperature in relation to set temperature, ambient temperature, compartment temperature and sunload. It then determines whether relationship between inlet air temperature, air-mix door position and current bi-level door position on one hand, and target DEF vent air temperature on the other hand is adequate, thus opening, closing or stopping bi-level door as required. A moderate level (not too warm) of air temperature will then be discharged to head level. Bi-level door is held in fully closed position when air vents are set in F/D or DEF mode.

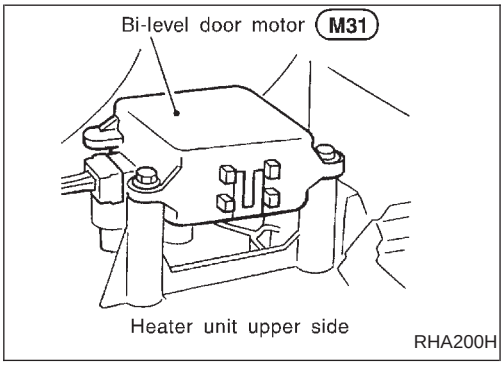


### COMPONENT DESCRIPTION

The bi-level door motor is attached to the heater unit's upper side. It rotates so that the bi-level door motor is opened or closed to a position set by the auto amplifier. Motor rotation is then fed back to the auto amplifier by the PBR built-in bi-level door motor (LCU).

### DIAGNOSTIC PROCEDURE

**SYMPTOM: If PBR circuit is open or shorted. (–27 or 27 appears on the display as a result of conducting Self-diagnosis STEP 2.)**
**Perform diagnostic procedure for LAN system circuit. Refer to HA-106.**

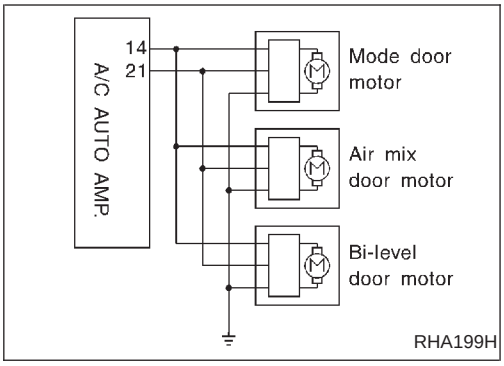


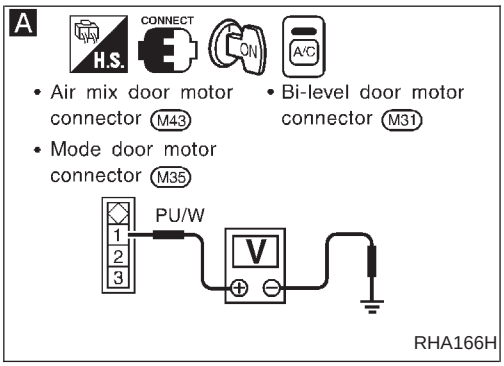


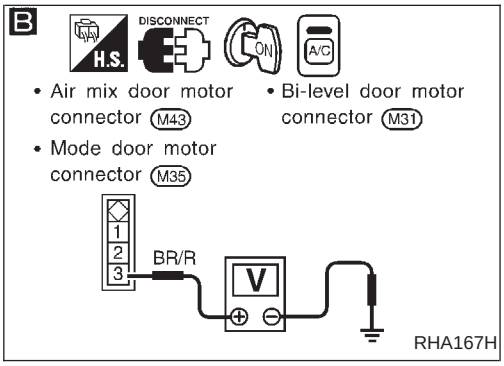


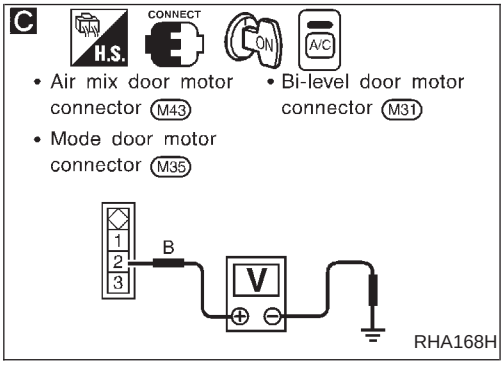


## LAN System Circuit

### DIAGNOSTIC PROCEDURE

**SYMPTOM: Any of these three mode door motor or bi-level door motor or air mix door motor does not operate normally.**

**A** — Note

CHECK POWER SUPPLY FOR MOTOR SIDE.
Do approx. 12 volts exist between door motor (LCU) harness terminal ① and body ground?
If OK, check harness for short.

↓ Yes

**B** — Note

CHECK SIGNAL AUTO AMP. (LCU) SIDE.
Do approx. 5.5 volts exist between auto amp. (LCU) terminal ③ and body ground?

↓ Yes

**C** — Note

CHECK MOTOR GROUND CIRCUIT.
Check harness continuity between door motor (LCU) harness terminal ② and body ground?

↓ OK

CHECK CONNECTOR FOR POOR CONNECTION.
Disconnect and reconnect the motor connector.
Does motor operate?

→ Yes: Poor the connector contact. Repair or replace as necessary.

↓ No

Replace the door motor.

**Note:**
**If the result is NG or No after checking circuit continuity, repair harness or connector.**

## LAN System Circuit (Cont'd)

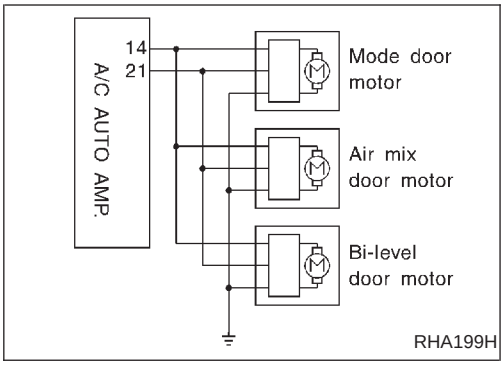


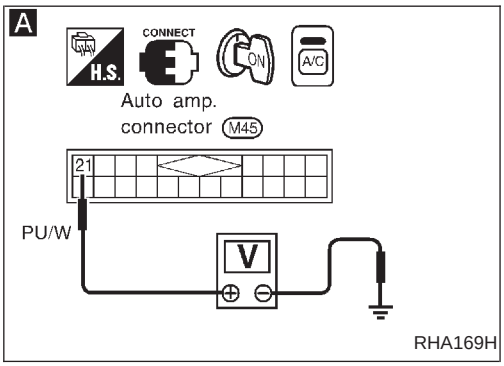


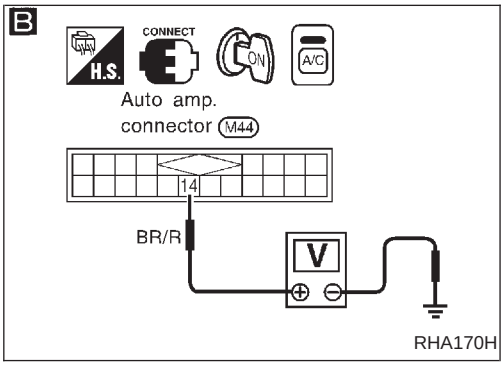


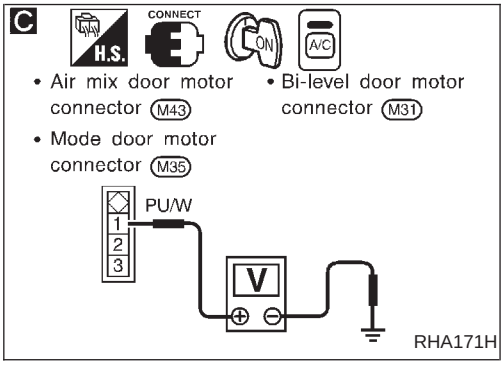


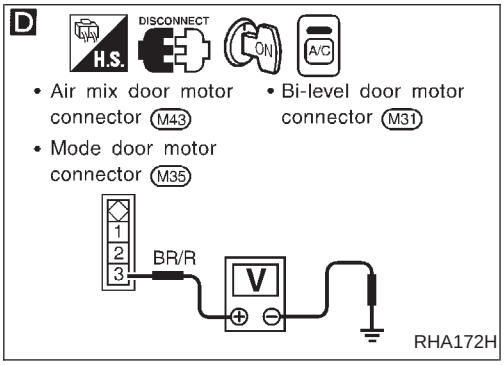


**SYMPTOM: Mode door motor, bi-level door motor and air mix door motor do not operate normally.**

**A**

CHECK POWER SUPPLY FOR AUTO AMP. (LCU) SIDE.
Do approx. 12 volts exist between auto amp. (LCU) harness terminal ㉑ and body ground?

- No → Replace auto amp. (LCU).
- Yes ↓

**B**

CHECK SIGNAL AUTO AMP. (LCU) SIDE.
Do approx. 5.5 volts exist between auto amp. (LCU) terminal ⑭ and body ground?

- No → Replace auto amp. (LCU).
- Yes ↓

**C** Note

CHECK POWER SUPPLY FOR MOTOR SIDE.
Do approx. 12 volts exist between door motor harness terminal ① and body ground?

- Yes ↓

**D** Note

CHECK SIGNAL MOTOR SIDE.
Do approx. 5.5 volts exist between door motor (LCU) terminal ③ and body ground?

- Yes ↓

**E** Note

CHECK MOTOR GROUND CIRCUIT.
Check harness continuity between door motor (LCU) harness terminal ② and body ground.

- OK ↓

CHECK BI-LEVEL DOOR MOTOR OPERATION.
Disconnect air mix door and mode door motor connector.

- Bi-level door motor operates normally. OK → Go to Ⓐ.
- NG ↓

CHECK AIR MIX DOOR MOTOR OPERATION.
Disconnect bi-level door motor connector, then reconnect air mix door motor connector.

- Air mix door motor operates normally. OK → Go to Ⓑ.
- NG ↓

CHECK MODE DOOR MOTOR OPERATION.
Disconnect air mix door motor connector, then reconnect mode door motor connector.

- Mode door motor operates normally. OK → Go to Ⓒ.
- NG ↓

Replace auto amp. (LCU).

## LAN System Circuit (Cont'd)

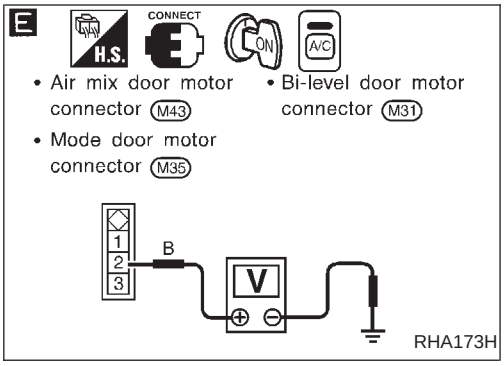


Ⓐ

CHECK AIR MIX DOOR MOTOR OPERATION.
Reconnect air mix door motor connector.

Air mix door motor operates normally.
OK → Replace mode door motor.

Ⓑ

CHECK MODE DOOR MOTOR OPERATION.
Reconnect mode door motor connector.

Mode door motor operates normally.
OK → Replace bi-level door motor.

Ⓒ

CHECK BI-LEVEL DOOR MOTOR OPERATION.
Reconnect bi-level door motor connector.

Bi-level door motor operates normally.
OK → Replace air mix door motor.

**Note:**
**If the result is NG or No after checking circuit continuity, repair harness or connector.**

# Intake Door Motor Circuit

## SYSTEM DESCRIPTION

### Component parts

Intake door control system components are:
1) Auto amplifier
2) Intake door motor
3) A/C LAN system (PBR)
4) In-vehicle sensor
5) Ambient sensor
6) Sunload sensor
7) Intake sensor
8) A/C control unit (PTC, AUTO, ECON, DEFROST, REC, OFF switches)

### System operation

The intake door control determines intake door position based on the ambient temperature and the in-vehicle temperature. When the ECON, DEFROST, or OFF switches are pushed, the auto amplifier sets the intake door at the “Fresh” position.

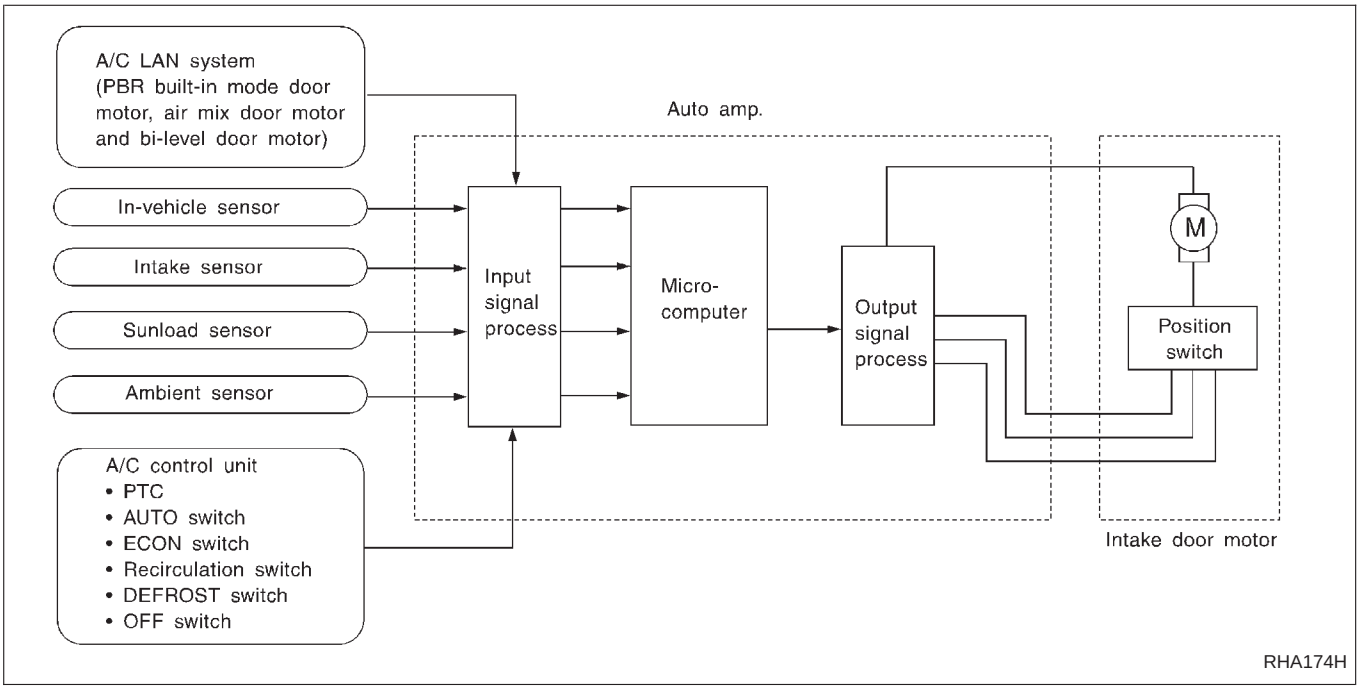

## Intake Door Motor Circuit (Cont'd)

### Intake door control specification

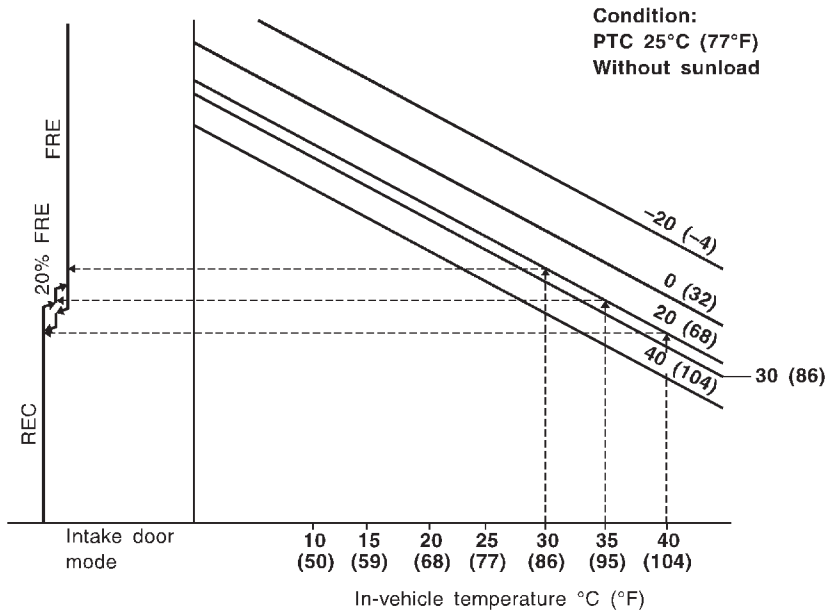


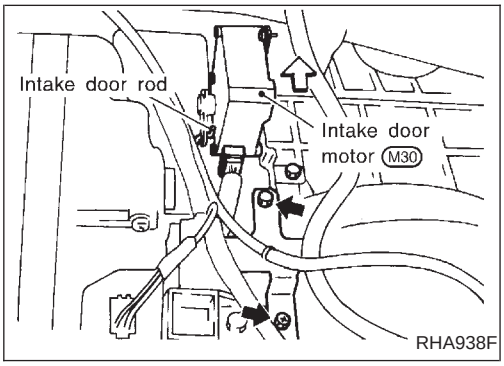


### COMPONENT DESCRIPTION

The intake door motor is attached to the intake unit. It rotates so that air is drawn from inlets set by the auto amplifier. Motor rotation is conveyed to a lever which activates the intake door.

# Intake Door Motor Circuit (Cont'd)

## DIAGNOSTIC PROCEDURE

**SYMPTOM: Intake door motor does not operate normally.**

- **Perform Preliminary Check 2 before referring to the following flow chart.**

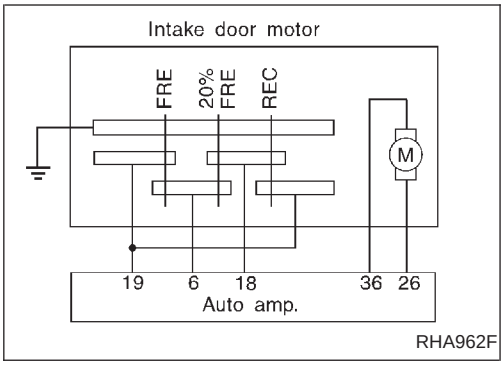

RHA962F

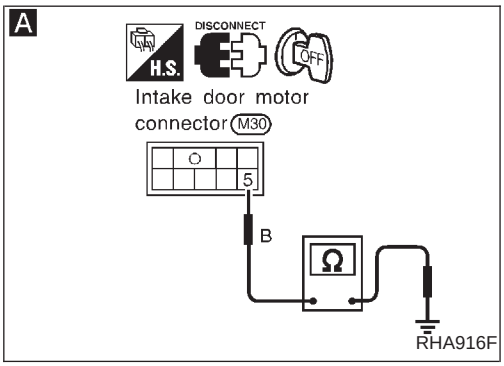

RHA916F

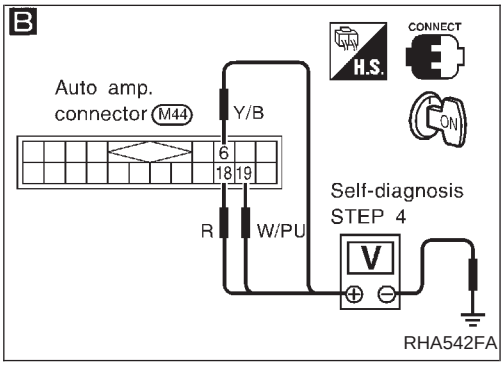

RHA542FA

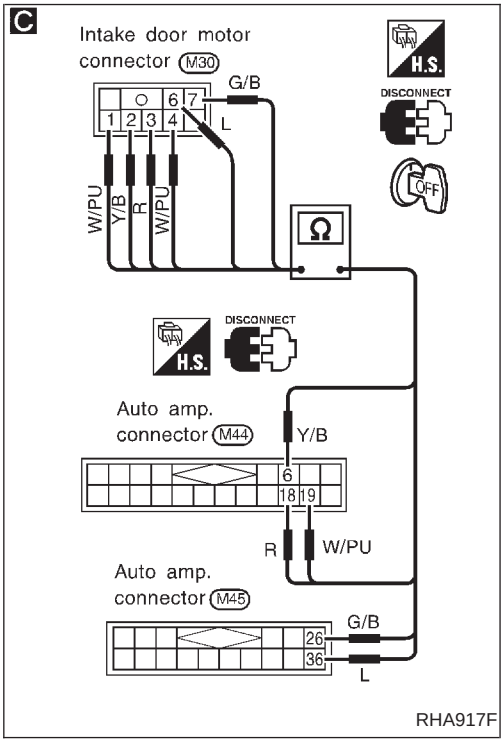

RHA917F

**A** Note

CHECK BODY GROUND CIRCUIT FOR INTAKE DOOR MOTOR.
Disconnect intake door motor harness connector.
Does continuity exist between intake door motor harness terminal ⑤ and body ground?

Yes ↓

**B**

CHECK FOR AUTO AMP. OUTPUT.
Set up Self-diagnosis STEP 4.
Measure voltage across auto amp. harness terminals and body ground.

| Code No. | Terminal No. ⊕ | Terminal No. ⊖ | Condition | Voltage V |
|---|---|---|---|---|
| 41 42 43 | ⑥ | Body ground | REC | 5 |
| | ⑱ or ⑲ | | | 0 |
| 44 45 | ⑲ | | 20% FRE | 5 |
| | ⑥ or ⑱ | | | 0 |
| 46 47 48 | ⑱ | | FRE | 5 |
| | ⑥ or ⑲ | | | 0 |

0V: Approx. 0V
5V: Approx. 5V

OK ↓

INSPECTION END

NG →

**C** Note

Check circuit continuity between each terminal on auto amp. and on intake door motor.

| Terminal No. Auto amp. | Terminal No. Intake door motor | Continuity |
|---|---|---|
| ⑲ | ④ | Yes |
| ⑥ | ② | |
| ⑱ | ③ | |
| ⑲ | ① | |
| ㉖ | ⑦ | |
| ㊱ | ⑥ | |

If OK, check harness for short.

OK ↓

Ⓐ
(Go to next page.)

**Note:**
**If the result is NG or No after checking circuit continuity, repair harness or connector.**

## Intake Door Motor Circuit (Cont'd)

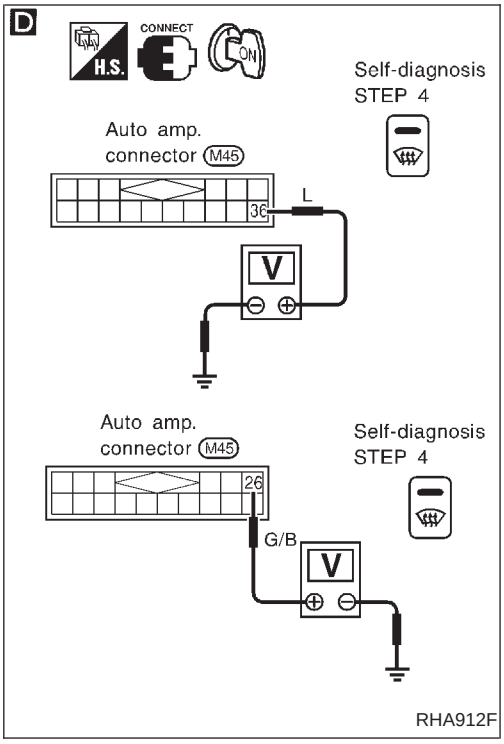


Ⓐ

D

CHECK FOR AUTO AMP. OUTPUT.
Set up Self-diagnosis STEP 4.
Measure voltage across auto amp. harness terminals and body ground.

| Code No. | Terminal No. ⊕ | Terminal No. ⊖ | Condi-tion | Voltage V |
|---|---|---|---|---|
| 41 | 26 | Body ground | REC | 12 |
| 42 | 36 | | | 0 |
| 43 | | | | |
| 46 | 26 | | FRE | 0 |
| 47 | 36 | | | 12 |
| 48 | | | | |

0V: Approx. 0V
12V: Approx. 12V

NG → Replace auto amp.

OK → Replace intake door motor.

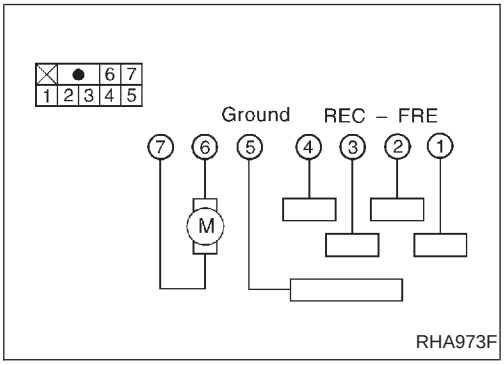


## COMPONENT INSPECTION

### Intake door motor

| 6 | 7 | Intake door operation | Movement of link rotation |
|---|---|---|---|
| ⊕ | ⊖ | REC → FRE | Counterclockwise |
| — | — | STOP | STOP |
| ⊖ | ⊕ | FRE → REC | Clockwise |

# Blower Motor Circuit

## SYSTEM DESCRIPTION

### Component parts

Fan speed control system components are:
1) Auto amplifier
2) Fan control amplifier
3) A/C LAN system (PBR)
4) In-vehicle sensor
5) Ambient sensor
6) Sunload sensor
7) Intake sensor
8) Thermal transmitter
9) A/C control unit (PTC, AUTO, ECON, MODE, DEFROST, BLOWER, OFF switches)

### System operation

For description of system operation, see next page.

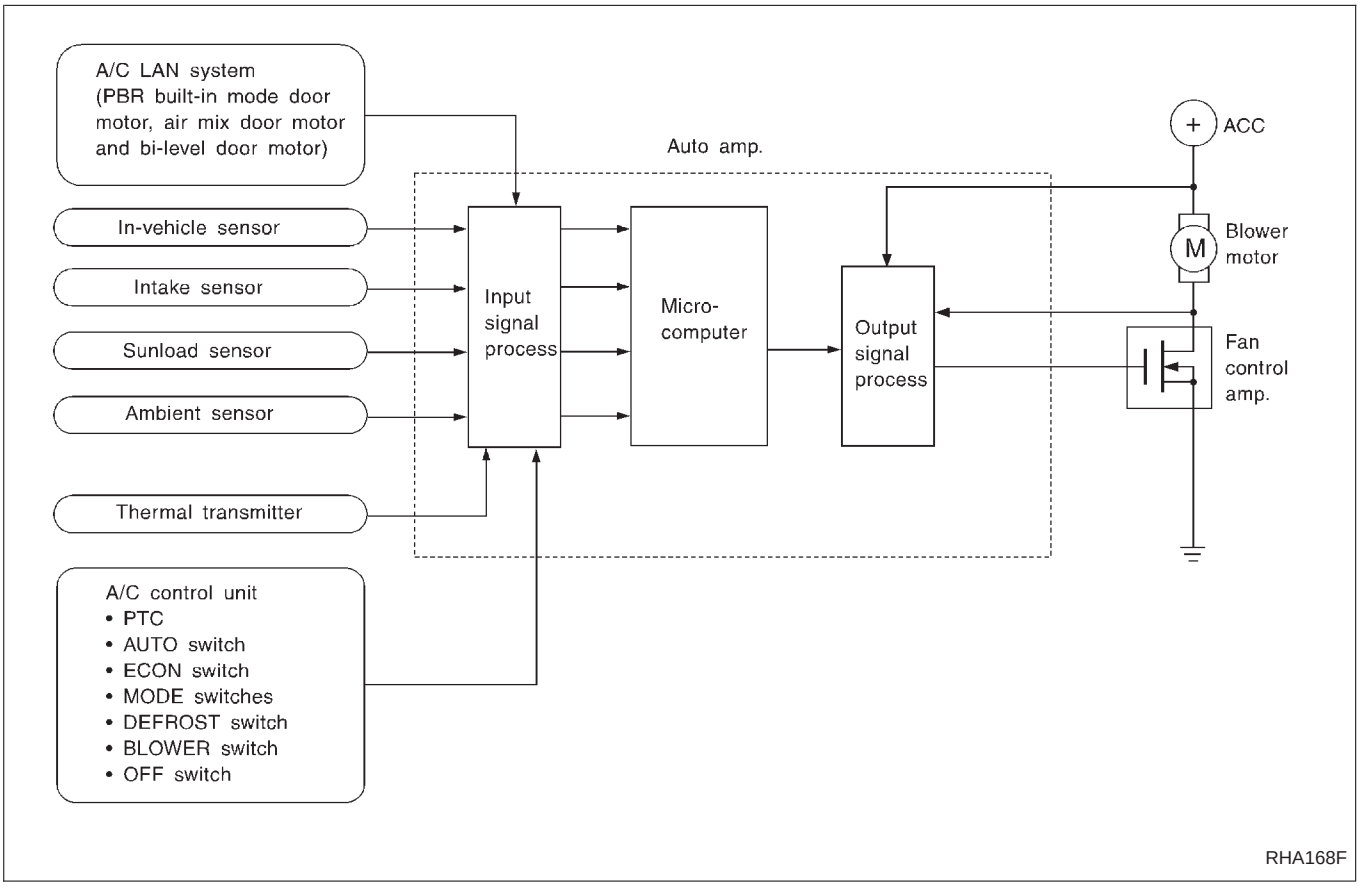


### Automatic mode

In the automatic mode, the blower motor speed is calculated by the automatic amplifier based on inputs from the PBR, in-vehicle sensor, sunload sensor, and ambient sensor. The blower motor applied voltage ranges from approximately 4 volts (lowest speed) to 12 volts (highest speed).

The control blower speed (in the range of 4 to 12V), the automatic amplifier supplies a signal to the fan control amplifier. Based on this signal, the fan control amplifier controls the current flow from the blower motor to ground. If the computed blower voltage (from automatic amplifier) is above 10.5 volts, the high blower relay is activated. The high blower relay provides a direct path to ground (bypassing the fan control amplifier), and the blower motor operates at high speed.

## Blower Motor Circuit (Cont'd)

### Starting blower speed control

### Start up from "COLD SOAK" condition (Automatic mode)

In a cold start up condition where the engine coolant temperature is below 56°C (133°F) and the ambient temperature is below 15°C (59°F), the blower will not operate for a short period of time (up to 90 seconds). The exact start delay time varies depending on the ambient and engine coolant temperature.
In the most extreme case (very low ambient) the blower starting delay will be 150 seconds as described above. After this delay, the blower will operate at low speed until the engine coolant temperature rises above 32°C (90°F), at which time the blower speed will increase to the objective speed.

### Start up from normal or "HOT SOAK" condition (Automatic mode)

The blower will begin operation momentarily after the AUTO button is pushed. The blower speed will gradually rise to the objective speed over a time period of 3 seconds or less (actual time depends on the objective blower speed).

### Blower speed compensation

### Sunload

When the in-vehicle temperature and the set temperature are very close, the blower will be operating at low speed. The low speed will vary depending on the sunload. During conditions of high sunload, the blower low speed is "normal" low speed (approx. 6V). During low or no sunload conditions, the low speed will drop to "low" low speed (approx. 5V).

### Ambient

When the ambient temperature is in the "moderate" range [10 - 15°C (50 - 59°F)], the computed blower voltage will be compensated (reduced) by up to 3.5V (depending on the blower speed). In the "extreme" ambient ranges [below 0°C (32°F) and above 20°C (68°F)] the computed objective blower voltage is not compensated at all. In the ambient temperature ranges between "moderate" and "extreme" [0 - 10°C (32 - 50°F) and 15 - 20°C (59 - 68°F)], the amount of compensation (for a given blower speed) varies depending on the ambient temperature.

### Fan speed control specification

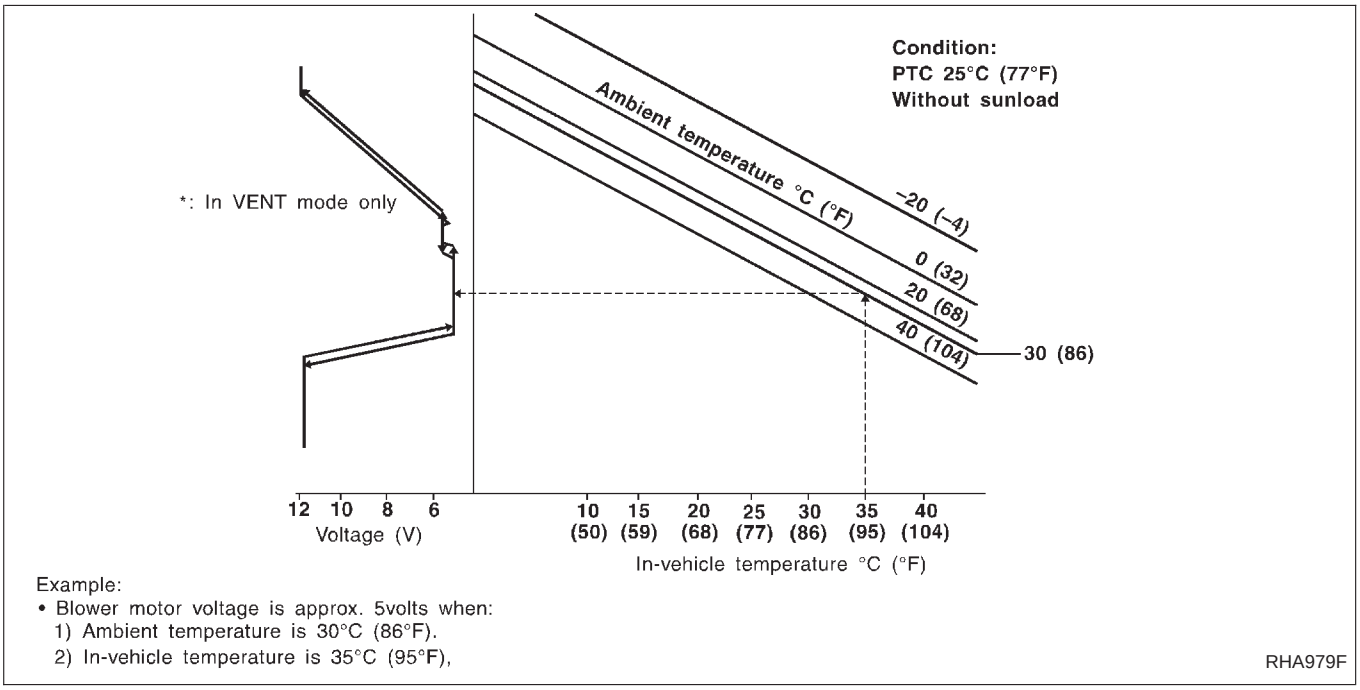

## Blower Motor Circuit (Cont'd)

### COMPONENT DESCRIPTION

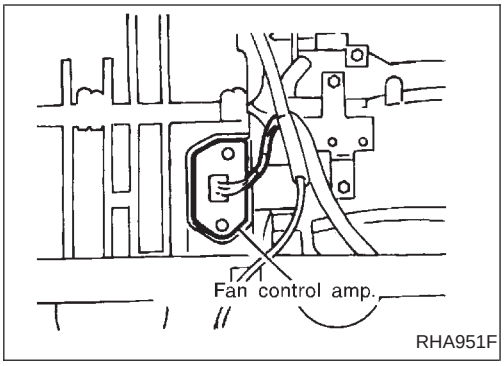


#### Fan control amplifier

The fan control amplifier is located on the cooling unit. It amplifies the base current flowing from the auto amplifier to change the blower speed within the range of 4V to 12V.

### DIAGNOSTIC PROCEDURE

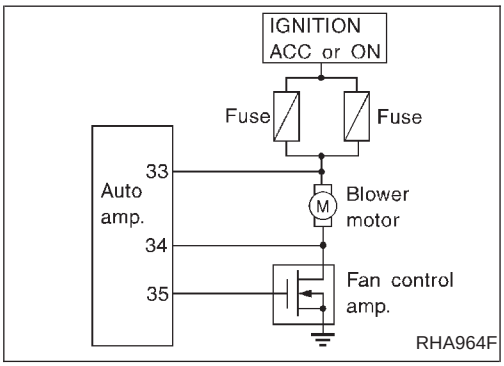


**SYMPTOM: Blower motor operation is malfunctioning under out of starting Fan Speed Control.**

- **Perform Preliminary Check 5 before referring to the following flow chart.**

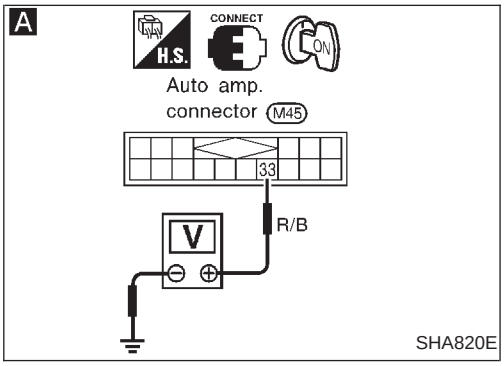


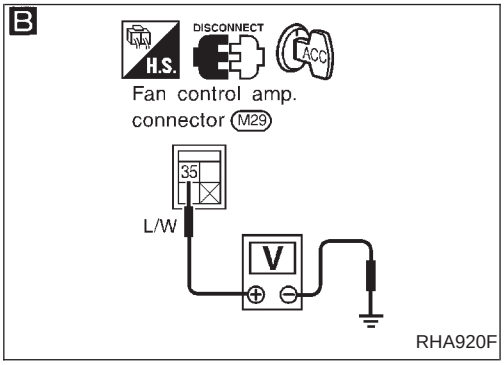


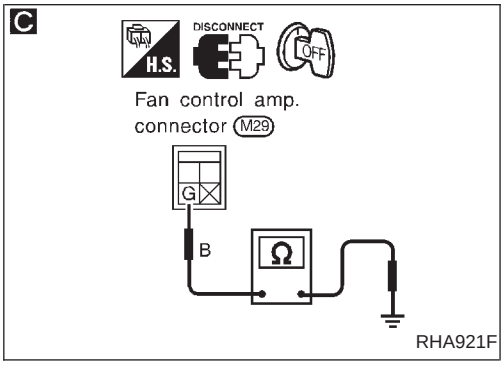


**A**

CHECK POWER SUPPLY FOR AUTO AMP.
Disconnect auto amp. harness connector.
Do approx. 12 volts exist between auto amp. harness terminal ㉝ and body ground?

No → Check power supply circuit and 15A fuses (No. 1 and 15, located in the fuse block).
Refer to EL section ("Wiring Diagram", "POWER SUPPLY ROUTING").

Yes ↓

**B**

CHECK POWER SUPPLY FOR FAN CONTROL AMP.
Disconnect fan control amp. harness connector.
Do approx. 12 volts exist between fan control amp. harness terminal ㉟ and body ground?

No → **E**

CHECK POWER SUPPLY FOR BLOWER MOTOR.
Disconnect blower motor harness connector.
Do approx. 12 volts exist between blower motor harness terminal ① and body ground?

Yes → **F**

No → Check power supply circuit and 15A fuses (No. 1 and 15, located in the fuse block). Refer to EL section ("Wiring Diagram", "POWER SUPPLY ROUTING").

Yes ↓

**C** Note

CHECK BODY GROUND CIRCUIT FOR FAN CONTROL AMP.
Check harness continuity between fan control amp. harness terminal Ⓖ and body ground.
**Continuity should exist.**
If OK, check harness for short.

OK ↓

Reconnect fan control amp. harness connector and auto amp. harnesses connector.

↓

Ⓐ
(Go to next page.)

**F** Note

Check circuit continuity between blower motor harness terminal ② and fan control amp. harness terminal ㉟.
**Continuity should exist.**
If OK, check harness for short.

OK ↓

Ⓑ
(Go to next page.)

**Note:**
**If the result is NG or No after checking circuit continuity, repair harness or connector.**

## Blower Motor Circuit (Cont'd)

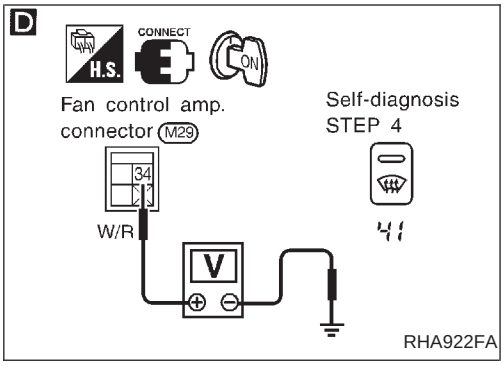


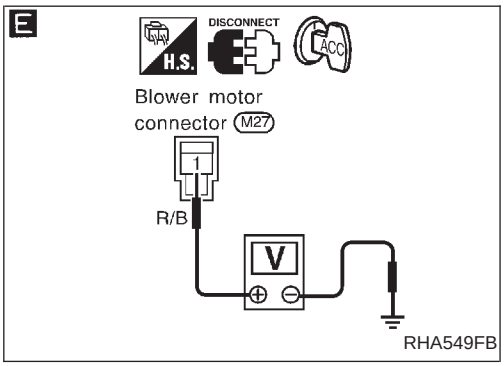


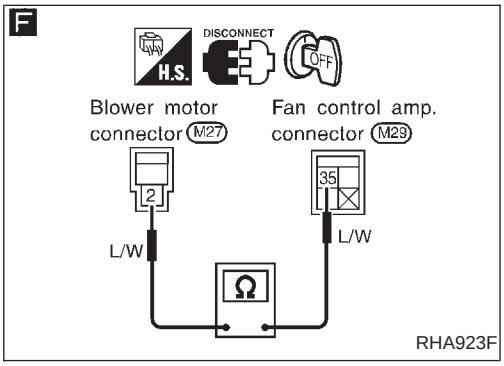


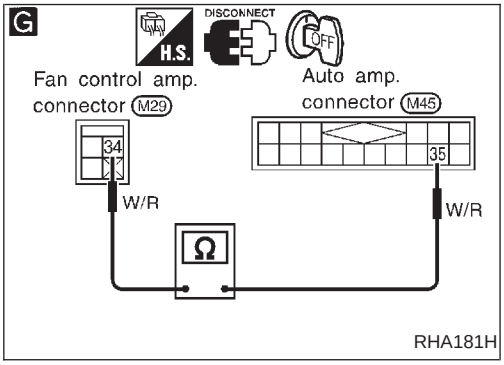


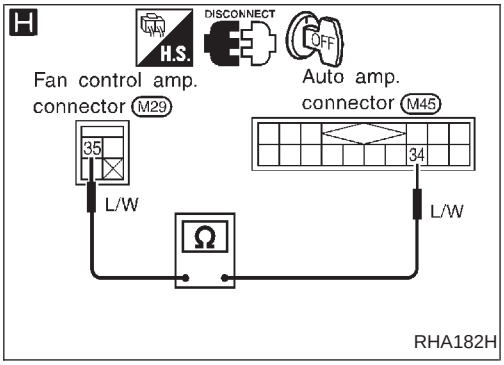


Ⓐ

**D**

CHECK VOLTAGE FOR FAN CONTROL AMP.
Set up Self-diagnosis STEP 4.
Measure voltage across fan control amp. harness terminal ㉞ and body ground.

| Code No. | Terminal No. | | Voltage |
|---|---|---|---|
| | ⊕ | ⊖ | |
| 41 | ㉞ | Body ground | Approx. 2.5 - 3.0V |

NG (Less than 2.5V) → Replace fan control amp.

NG (More than 3.0V) → CHECK FAN CONTROL AMP. (Refer to "Electrical Components Inspection".) (HA-117)

NG → Replace fan control amp.

OK → Disconnect auto amp. and fan control amp. harness connector.

Yes →

**G** Note

Check circuit continuity between auto amp. harness terminal No. ㉟ and fan control amp. harness terminal No. ㉞.
**Continuity should exist.**
If OK, check harness for short.

OK →

**H** Note

Check circuit continuity between auto amp. harness terminal No. ㉞ and fan control amp harness terminal No. ㉟.
**Continuity should exist.**
If OK, check harness for short.

OK →

Ⓒ

(Go to next page.)

Ⓑ

CHECK BLOWER MOTOR. (Refer to Electrical Components Inspection.) (HA-HA-117)

NG → Replace blower motor.

OK → CHECK FAN CONTROL AMP. (Refer to "Electrical Components Inspection".) (HA-117)

NG → Replace fan control amp.

OK → Disconnect auto amp. and fan control amp. harness connector.

**Note:**
**If the result is NG or No after checking circuit continuity, repair harness or connector.**

## Blower Motor Circuit (Cont'd)

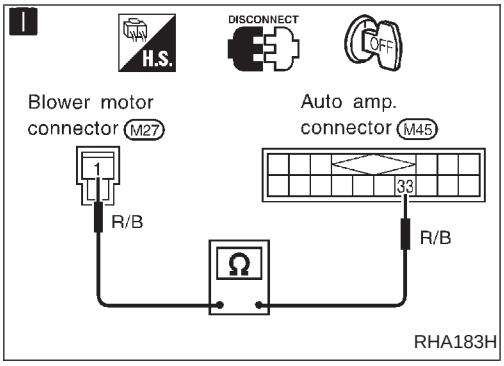


Ⓒ

Note

Check circuit continuity between auto amp. harness terminal No. ㉝ and blower motor harness terminal No. ① .
**Continuity should exist.**
If OK, check harness for short.

OK

Replace auto amp.

**Note:**
**If the result is NG or No after checking circuit continuity, repair harness or connector.**

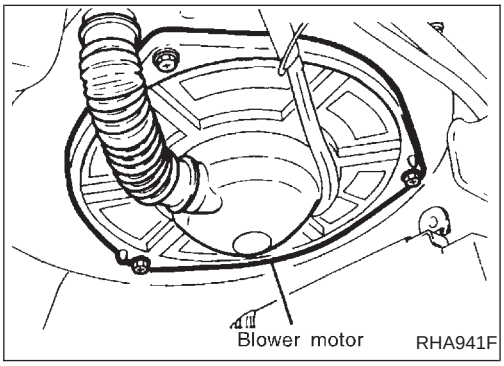


## COMPONENT INSPECTION

### Blower motor

Confirm smooth rotation of the blower motor.

- Ensure that there are no foreign particles inside the intake unit.

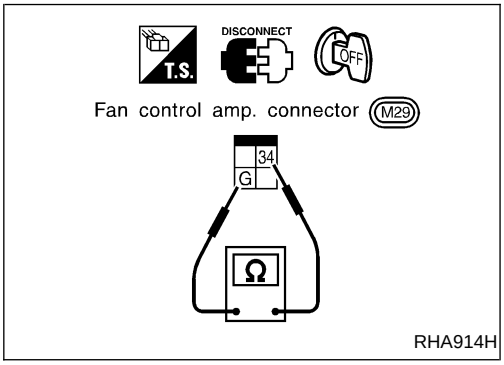


### Fan control amp.

Check continuity between terminals.

| Terminal Nos. | Continuity |
|---|---|
| 34-G | Yes |

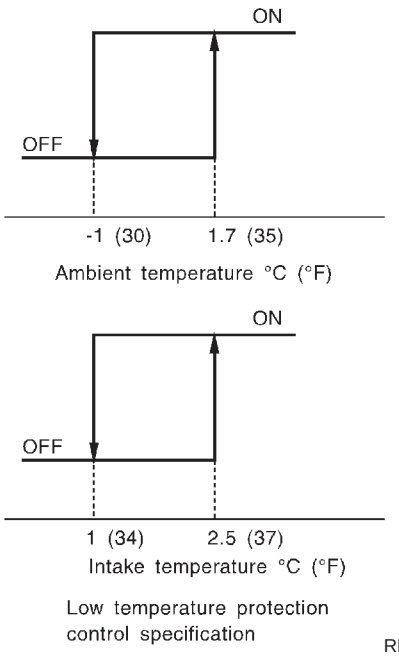


Low temperature protection control specification

## Magnet Clutch Circuit

### SYSTEM DESCRIPTION

Auto amplifier controls compressor operation by ambient temperature, intake temperature, and signal from ECM.

**Low temperature protection control**

Auto amplifier will turn the compressor “ON” or “OFF” as determined by a signal detected by ambient sensor and intake sensor.

When ambient temperatures are greater than 1.7°C (35°F), the compressor turns “ON”. The compressor turns “OFF” when ambient temperatures are less than −1°C (30°F).

When ambient temperature is lower than 13°C (55°F) and the temperature detected by intake sensor is less than 7°C (45°F), the compressor turns OFF after receiving a signal from ECM.

## Magnet Clutch Circuit (Cont'd)

### DIAGNOSTIC PROCEDURE

**SYMPTOM: Magnet clutch does not engage after performing Preliminary Check 6.**

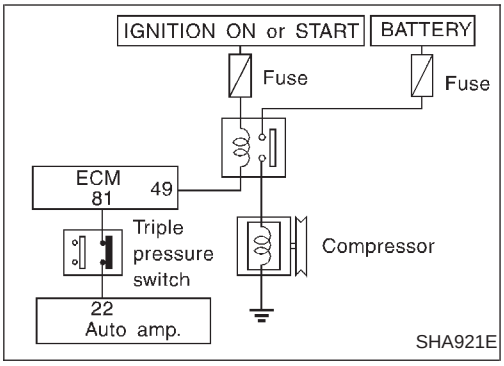


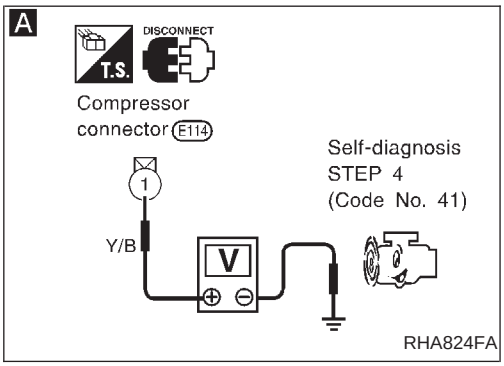


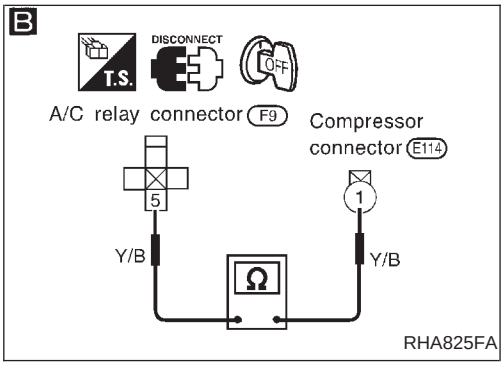


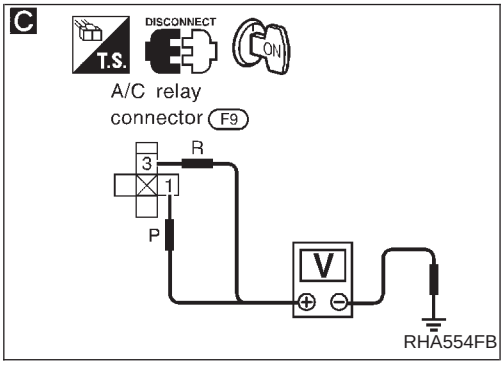


**A**

CHECK POWER SUPPLY FOR COMPRESSOR.
1. Disconnect compressor harness connector.
2. Set up code No. 41 in Self-diagnosis STEP 4.
3. Do approx. 12 volts exist between compressor harness terminal No. ① and body ground?

No → Disconnect A/C relay harness connector.

Yes → Check magnet clutch.

NG → Replace magnet clutch.

**B**

Note

Check circuit continuity between A/C relay harness terminal No. ⑤ and compressor harness terminal No. ①.
**Continuity should exist.**
If OK, check harness for short.

OK → Turn ignition switch OFF to cancel Self-diagnosis STEP 4.

**C**

CHECK POWER SUPPLY FOR A/C RELAY.
Disconnect A/C relay.
Do approx. 12 volts exist between A/C relay harness terminal No. ①, ③ and body ground?

No → Check power supply circuit and 7.5A fuses (No. 6 and 55, located in the fuse block). (Refer to "POWER SUPPLY ROUTING" in EL section and Wiring Diagram.)

Yes → CHECK A/C RELAY AFTER DISCONNECTING IT. (Refer to HA-121.)

NG → Replace A/C relay.

OK → Reconnect A/C relay.

Ⓐ
(Go to next page.)

**Note:**
**If the result is NG or No after checking circuit continuity, repair harness or connector.**

## Magnet Clutch Circuit (Cont'd)

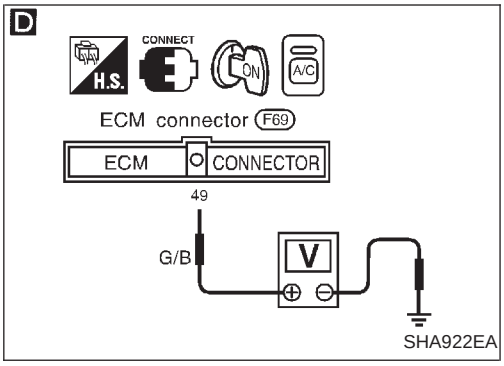


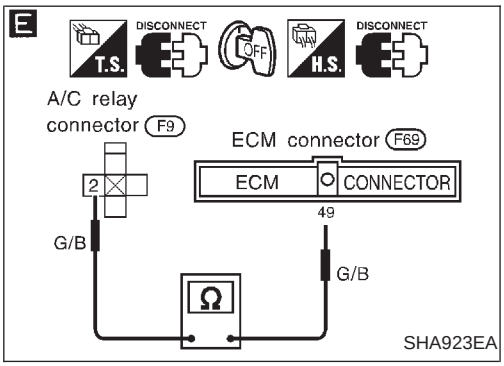


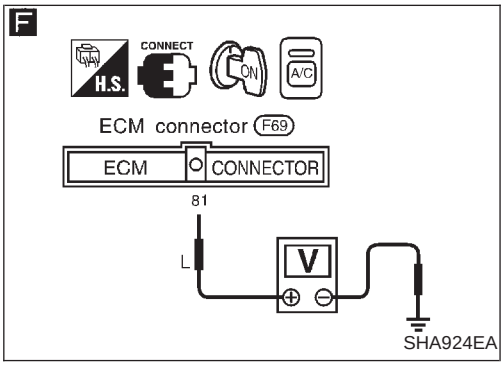


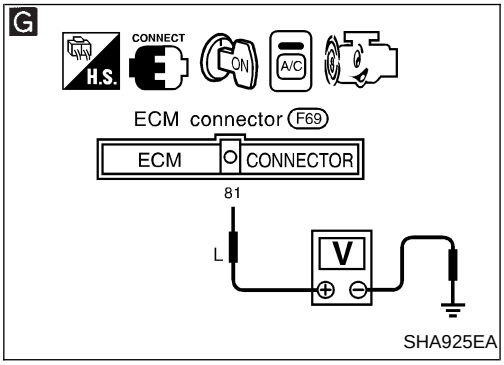


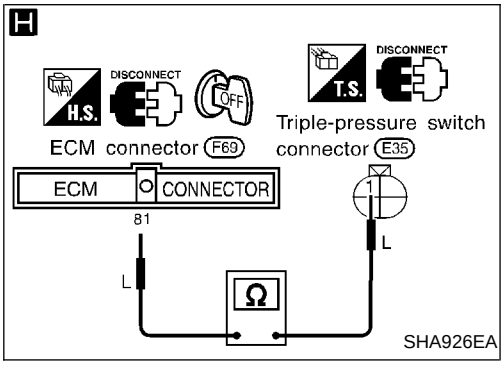


Ⓐ

**D** CHECK COIL SIDE CIRCUIT OF A/C RELAY.
Do approx. 12 volts exist between ECM harness terminal No. ㊾ and body ground?

- No → Disconnect A/C relay. Disconnect ECM harness connector. → **E** Note: Check circuit continuity between A/C relay harness terminal No. ② and ECM harness terminal No. ㊾. **Continuity should exist.** If OK, check harness for short.
- Yes ↓

**F** CHECK VOLTAGE FOR ECM.
Do approx. 12 volts exist between ECM harness terminal No. ㊶ and body ground?

- No → CHECK ECM. Refer to EC section.
- Yes ↓

**G** CHECK VOLTAGE FOR ECM.
Do approx. 0 volts exist between ECM harness terminal No. ㊶ and body ground?

- No → Disconnect ECM harness connector. Disconnect triple-pressure switch harness connector. → **H** Note: Check circuit continuity between ECM harness terminal No. ㊶ and triple-pressure switch harness terminal No. ①.
  - OK ↓ CHECK TRIPLE-PRESSURE SWITCH. Refer to HA-121.
    - NG → Replace triple-pressure switch.
    - OK ↓ Ⓑ (Go to next page.)
- Yes ↓ CHECK ECM. Refer to EC section.

**Note:**
**If the result is NG or No after checking circuit continuity, repair harness or connector.**

## Magnet Clutch Circuit (Cont'd)

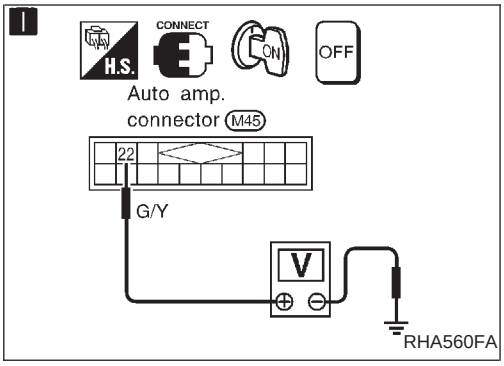


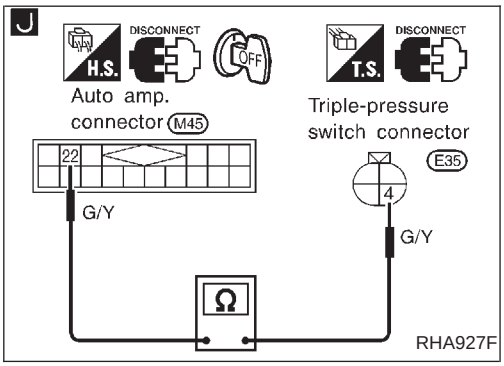


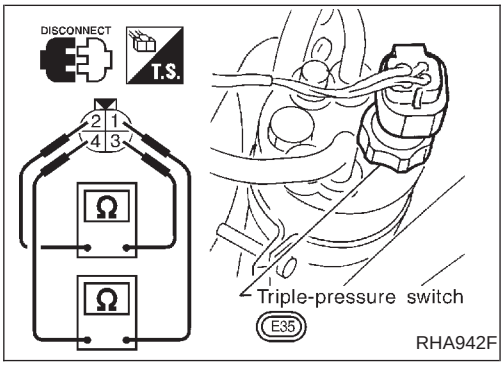


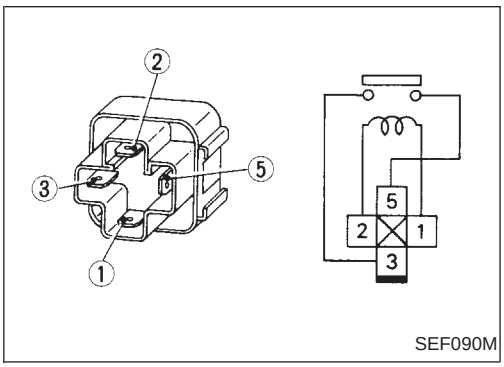


Ⓑ

**I**

CHECK AUTO AMP. CIRCUIT BETWEEN TRIPLE-PRESSURE SWITCH AND AUTO AMP.
Do approx. 4 to 5 volts exist between auto amp. harness terminal No.㉒ and body ground?

No → **J** Note

Check circuit continuity between auto amp. harness terminal No. ㉒ and triple-pressure switch harness terminal No. ④ .
**Continuity should exist.**
If OK, check harness for short.

Yes ↓

Replace auto amp.

**Note:**
**If the result is NG or No after checking circuit continuity, repair harness or connector.**

## COMPONENT INSPECTION

### Triple-pressure switch

| | Terminals | High-pressure side line pressure kPa (kg/cm$^2$, psi) | Operation | Continuity |
|---|---|---|---|---|
| Low-pressure side | ① - ④ | Increasing to 152.0 - 201.0 (1.55 - 2.05, 22.0 - 29.2) | ON | Exists. |
| | | Decreasing to 152.0 - 201.0 (1.55 - 2.05, 22.0 - 29.2) | OFF | Does not exist. |
| Medium-pressure side* | ② - ③ | Increasing to 1,422 - 1,618 (14.5 - 16.5, 206 - 235) | ON | Exists. |
| | | Decreasing to 1,128 - 1,422 (11.5 - 14.5, 164 - 206) | OFF | Does not exist. |
| High-pressure side | ① - ④ | Decreasing to 2,059 - 2,256 (21 - 23, 299 - 327) | ON | Exists. |
| | | Increasing to 2,648 - 2,844 (27 - 29, 384 - 412) | OFF | Does not exist. |

* For cooling fan motor operation.

### A/C relay

Check continuity between terminal Nos. ③ and ⑤ .

| Conditions | Continuity |
|---|---|
| 12V direct current supply between terminal Nos. ① and ② . | Yes |
| No current supply | No |

If NG, replace relay.

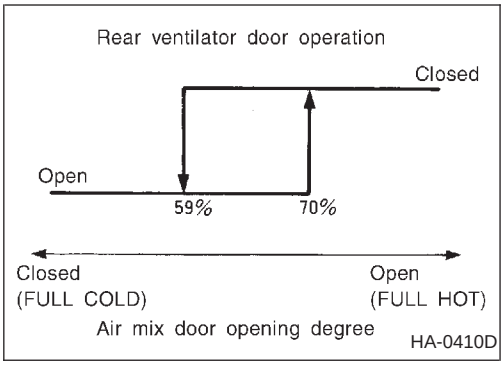


## Rear Vent Door Motor Circuit

### COMPONENT DESCRIPTION

Rear vent door is opened or closed by rear vent door motor. Rear vent door operation is controlled by auto amplifier.

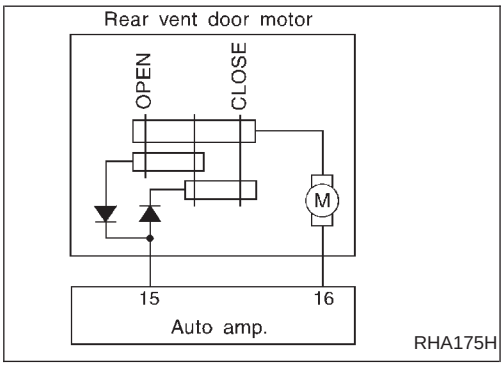


### DIAGNOSTIC PROCEDURE

**SYMPTOM: Rear vent door motor does not operate normally.**

CHECK MAIN POWER SUPPLY AND GROUND CIRCUIT FOR AUTO AMP. (Refer to HA-87.)

NG → Repair Main Power Supply and Ground Circuit.

OK ↓

**A**

CHECK FOR AUTO AMP. OUTPUT.
Do approx. 12 volts exist between rear ventilator door harness terminal Nos. ①, ② and body ground?

| Code No. | Terminal No. ⊕ | Terminal No. ⊖ | Voltage V |
|---|---|---|---|
| 41 | ① | Body ground | 0 |
| | ② | | Approx. 12 |
| 42 | ① | | Approx. 12 |
| | ② | | 0 |

No → **B**

Check circuit continuity between auto amp. harness terminal No. ⑮ (⑯) and rear ventilator door motor harness terminal No. ② (①).
**Continuity should exist.**
If OK, check harness for short.

Note

OK ↓

Replace auto amp.

Yes ↓

CHECK REAR VENT DOOR MOTOR.

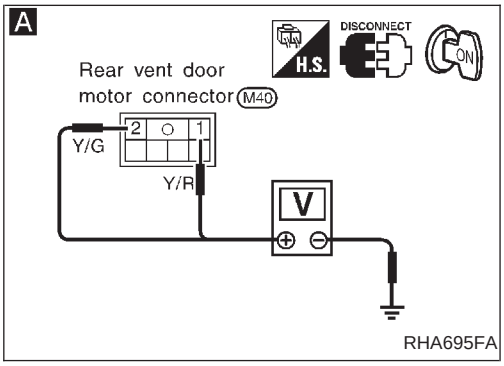


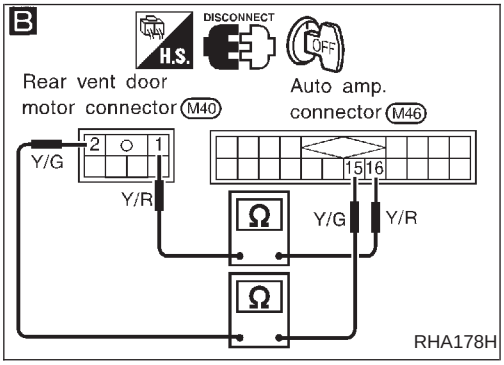


**Note:**
**If the result is NG or No after checking circuit continuity, repair harness or connector.**

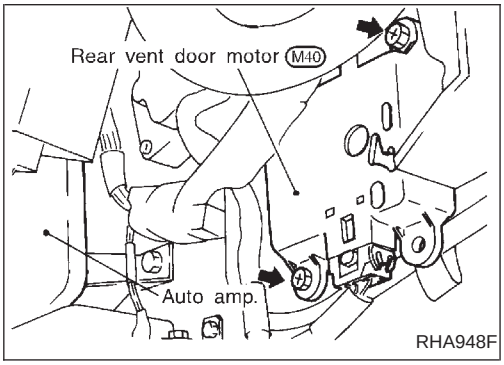


### COMPONENT INSPECTION

#### Rear vent door motor

1. Set up code No. 41 in Self-diagnosis STEP 4.
2. Check rear ventilator door operates properly when changing code No. 41 to 48 by pushing (DEF) switch.

| 41 | 42 | 43 | 44 | 45 | 46 | 47 | 48 |
|---|---|---|---|---|---|---|---|
| Open | Close | | | | | | |

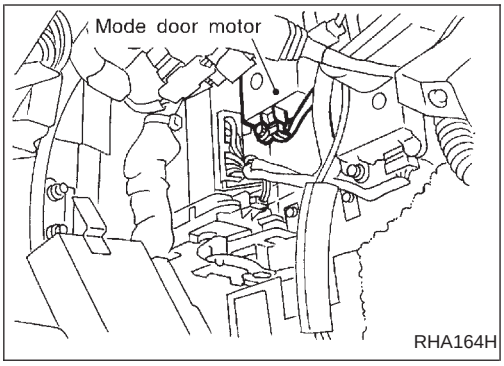


## Control Linkage Adjustment

### MODE DOOR

1. Install mode door motor to heater unit and connect it to body harness.
2. Attach mode door motor rod to side link holder.
3. Check mode door operates properly when changing code No. 41 to 48 by pushing FRONT (DEF) switch.

| 41 | 42 | 43 | 44 | 45 | 46 | 47 | 48 |
|---|---|---|---|---|---|---|---|
| VENT | VENT | B/L | B/L | B/L2 | FOOT | F/D | DEF |

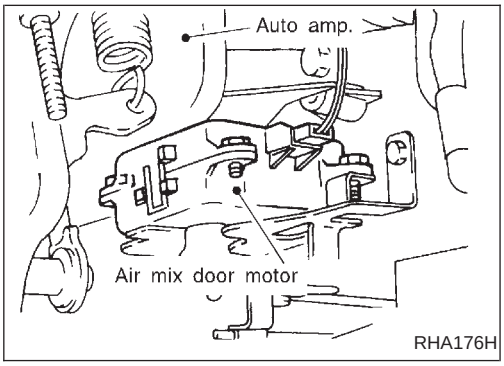


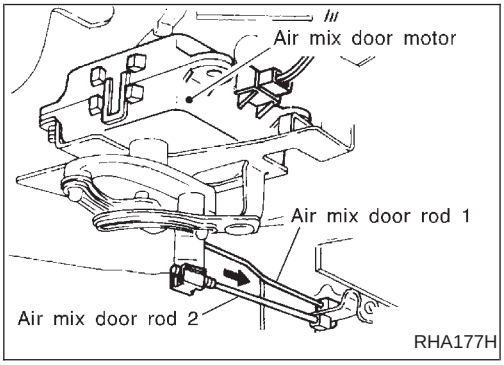


### AIR MIX DOOR

1. Install air mix door motor to heater unit and connect it to body harness.
2. Set up code No. 41 in Self-diagnosis STEP 4.
3. Move air mix door lever by hand and hold it at full cold position.
4. Attach air mix door rod 1 to rod holder.
5. Push air mix door rod 2 in arrow direction.
6. Check air mix door operates properly when changing code No. 41 to 48 by pushing FRONT (DEF) switch.

| 41 | 42 | 43 | 44 | 45 | 46 | 47 | 48 |
|---|---|---|---|---|---|---|---|
| Full Cold | | | Full Hot | | | | |

## Control Linkage Adjustment (Cont'd)

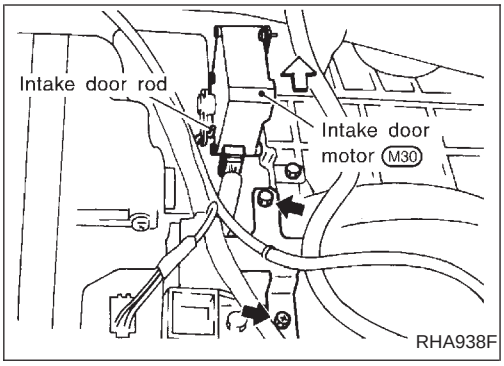


### INTAKE DOOR

1. Install intake door motor to intake unit and connect it to body harness.
2. Set up code No. 41 in Self-diagnosis STEP 4.
3. Move intake door link by hand and hold it at REC position.
4. Attach intake door lever to rod holder.
5. Check intake door operates properly when changing code No. 41 to 48 by pushing (DEF) switch.

| 41 | 42 | 43 | 44 | 45 | 46 | 47 | 48 |
|---|---|---|---|---|---|---|---|
| REC | | | 20% FRE | | FRE | | |

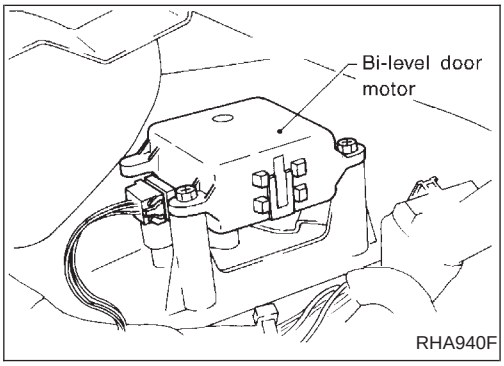


### BI-LEVEL DOOR

1. Install bi-level door motor to heater unit and connect it to body harness.
2. Set up code No. 41 in Self-diagnosis STEP 4.
3. Move water valve rod by hand and hold it at closed position.
4. Attach water valve rod to rod holder.
5. Check bi-level door operates properly when changing code No. 41 to 48 by pushing (DEF) switch.

| 41 | 42 | 43 | 44 | 45 | 46 | 47 | 48 |
|---|---|---|---|---|---|---|---|
| Open | | | Close | | | | |

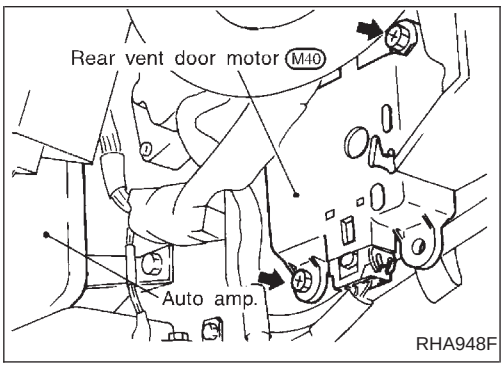


### REAR VENTILATOR DOOR

1. Install rear ventilator door motor to heater unit and connect it to body harness.
2. Set up code No. 41 in Self-diagnosis STEP 4.
3. Check rear ventilator door operates properly when changing code No. 41 to 48 by pushing (DEF) switch.

| 41 | 42 | 43 | 44 | 45 | 46 | 47 | 48 |
|---|---|---|---|---|---|---|---|
| Open | Close | | | | | | |

## HFC-134a (R-134a) Service Procedure

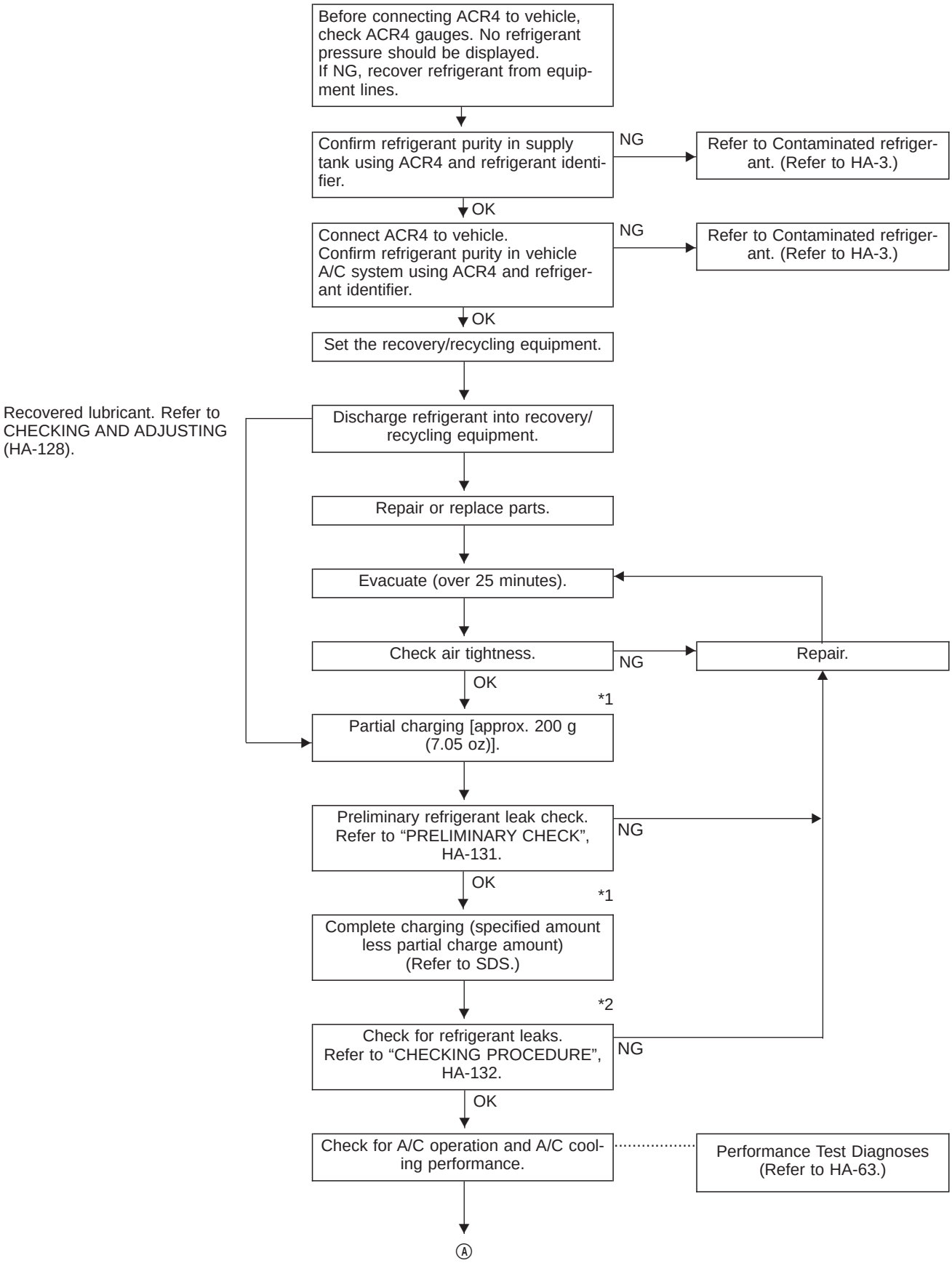

## HFC-134a (R-134a) Service Procedure (Cont'd)

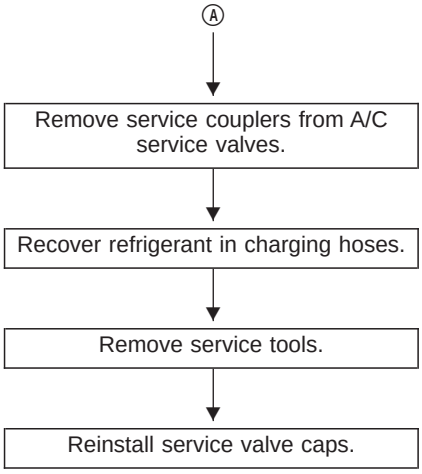


Note: *1 Before charging refrigerant, ensure engine is off.
*2 Before checking for leaks, start engine to activate air conditioning system then turn engine off. Service valve caps must be installed to prevent leakage.

## DISCHARGING REFRIGERANT

**WARNING:**

**Avoid breathing A/C refrigerant and lubricant vapor or mist. Exposure may irritate eyes, nose and throat. Remove HFC-134a (R-134a) from A/C system using certified service equipment meeting requirements of SAE J2210 (R-134a recycling equipment), or J2209 (R-134a recovery equipment). If accidental system discharge occurs, ventilate work area before resuming service. Additional health and safety information may be obtained from refrigerant and lubricant manufacturers.**

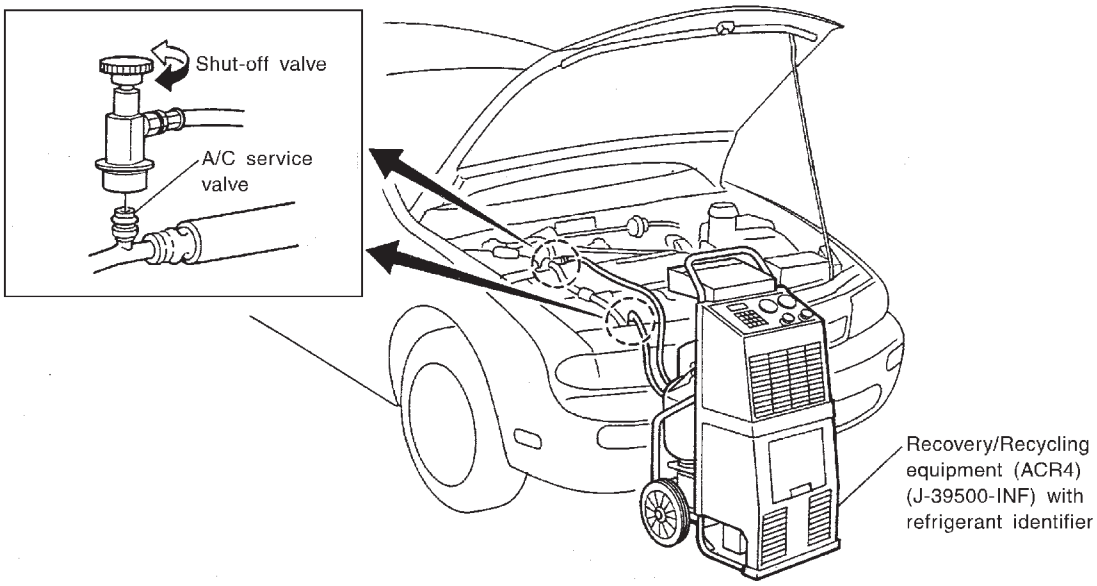


SHA179FA

## EVACUATING SYSTEM AND CHARGING REFRIGERANT

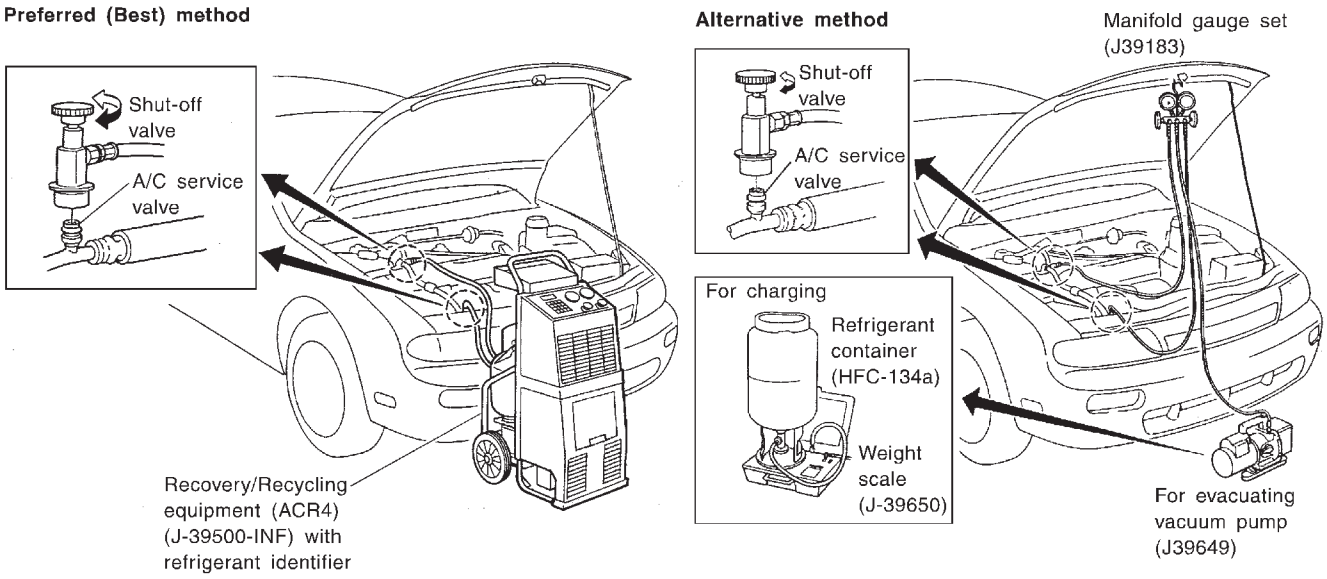


SHA180FA

## Maintenance of Lubricant Quantity in Compressor

The lubricant in the compressor circulates through the system with the refrigerant. Add lubricant to compressor when replacing any component or after a large gas leakage occurred. It is important to maintain the specified amount.

If lubricant quantity is not maintained properly, the following malfunctions may result:

- Lack of lubricant: May lead to a seized compressor
- Excessive lubricant: Inadequate cooling (thermal exchange interference)

### LUBRICANT

**Name: Nissan A/C System Oil Type S**
**Part number: KLH00-PAGS0**

### CHECKING AND ADJUSTING

Adjust the lubricant quantity according to the flowchart shown below.

START

Can lubricant return operation be performed?
- A/C system works properly.
- There is no evidence of a large amount of lubricant leakage.

Yes → Perform lubricant return operation, proceeding as follows:

1. Start engine, and set the following conditions:
   - **Test condition**
     **Engine speed: Idling to 1,200 rpm**
     **A/C or AUTO switch: ON**
     **Blower speed: Max. position**
     **Temp. control: Optional [Set so that intake air temperature is 25 to 30°C (77 to 86°F).]**
2. **Next item is for V-6 compressor. Connect the manifold gauge, and check that the high pressure side pressure is 588 kPa (6 kg/cm$^2$, 85 psi) or higher.**
   **If less than the reference level, attach a cover to the front face of the condenser to raise the pressure.**
3. Perform lubricant return operation for about 10 minutes.
4. Stop engine.

**CAUTION:**
**If excessive lubricant leakage is noted, do not perform the lubricant return operation.**

No ↓

Should the compressor be replaced?

No ↓ | Yes → Ⓐ (Go to next page.)

Is there any part to be replaced? (Evaporator, condenser, liquid tank or in case there is evidence of a large amount of lubricant leakage.)

Yes → After replacing any of the following major components, add the correct amount of lubricant to the system.

**Amount of lubricant to be added**

| Part replaced | Lubricant to be added to system<br>Amount of lubricant mℓ (US fl oz, Imp fl oz) | Remarks |
|---|---|---|
| Evaporator | 75 (2.5, 2.6) | — |
| Condenser | 75 (2.5, 2.6) | — |
| Liquid tank | 5 (0.2, 0.2) | Add if compressor is not replaced. *1 |
| In case of refrigerant leak | 30 (1.0, 1.1) | Large leak |
| | — | Small leak*2 |

*1: If compressor is replaced, addition of lubricant is included in the flow chart.
*2: If refrigerant leak is small, no addition of lubricant is needed.

No ↓

Carry out the A/C performance test.

## Maintenance of Lubricant Quantity in Compressor (Cont'd)

Ⓐ

**Lubricant adjusting procedure for COMPRESSOR REPLACEMENT**

1. Check ACR4 gauges. No refrigerant pressure should be displayed. If NG, recover refrigerant from equipment lines.
2. Confirm refrigerant purity in supply tank using ACR4 and refrigerant identifier. If NG, refer to "Contaminated refrigerant", HA-3.
3. Connect ACR4 to vehicle. Confirm refrigerant purity in vehicle A/C system using ACR4 and refrigerant identifier. If NG, refer to "Contaminated refrigerant", HA-3.
4. Discharge refrigerant into the refrigerant recovery/recycling equipment. Measure lubricant discharged into the recovery/recycling equipment.
5. Drain the lubricant from the "old" (removed) compressor into a graduated container and record the amount of lubricant drained.
6. Drain the lubricant from the "new" compressor into a separate, clean container
7. Measure an amount of new lubricant installed equal to amount drained from "old" compressor. Add this lubricant to "new" compressor through the suction port opening.
8. Measure an amount of "new" lubricant equal to the amount recovered during discharging. Add this lubricant to "new" compressor through the suction port opening.
9. If the liquid tank also needs to be replaced, add an additional 5 mℓ (0.2 US fl oz, 0.2 Imp fl oz) of lubricant at this time.
   **Do not add this 5 mℓ (0.2 US fl oz, 0.2 Imp fl oz) of lubricant if replacing only the compressor.**

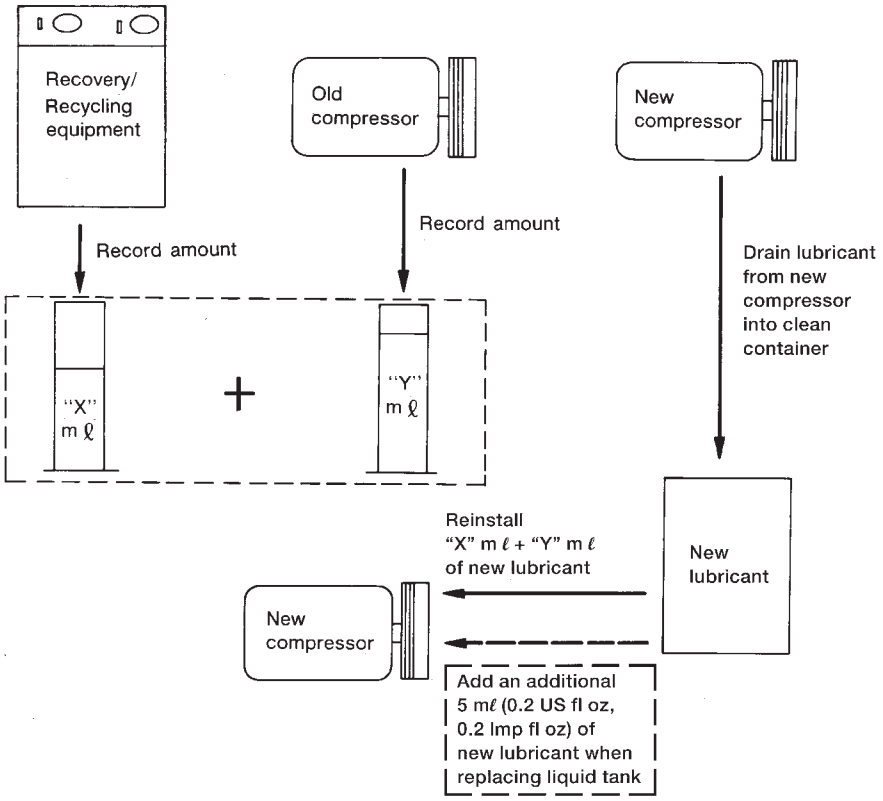


AHA374

## Refrigerant Lines

- Refer to page HA-5 regarding “Precautions for Refrigerant Connection”.

**SEC. 271•274•276**

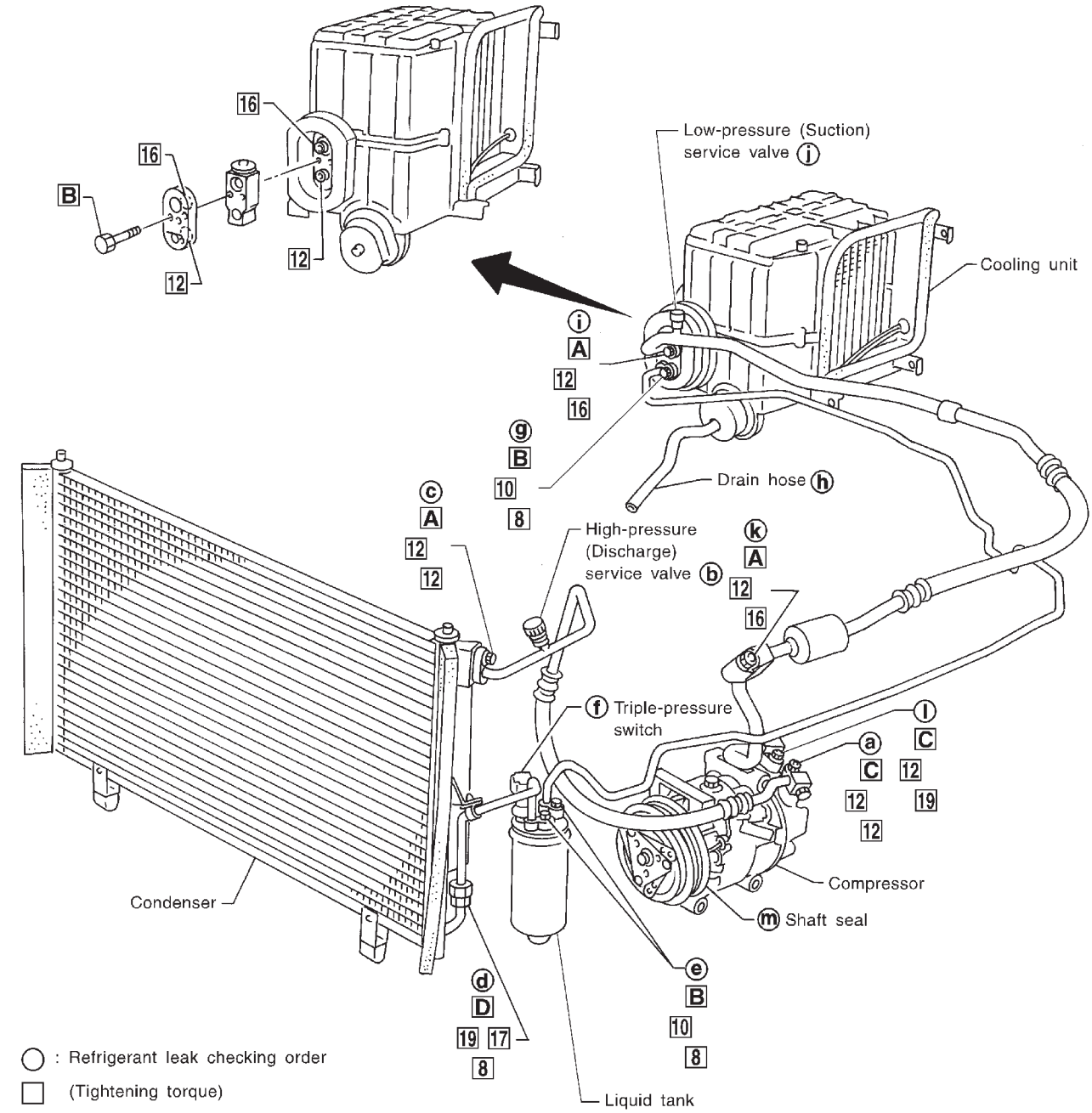


◯ : Refrigerant leak checking order

□ (Tightening torque)

□ □ (Wrench size)

□ (O-ring size)

: N•m (kg-m, in-lb)

**A : 10 - 20 (1.0 - 2.0, 87 - 174)**

**B : 3 - 4 (0.3 - 0.4, 26 - 35)**

**C : 8 - 11 (0.8 - 1.1, 69 - 95)**

: N•m (kg-m, ft-lb)

**D : 25 - 34 (2.5 - 3.5, 18 - 25)**

RHA952FC

## Checking Refrigerant Leaks

### PRELIMINARY CHECK

- Perform a visual inspection of all refrigeration parts, fittings, hoses and components for signs of A/C lubricant leakage, damage and corrosion. A/C lubricant leakage may indicate an area of refrigerant leakage. Allow extra inspection time in these areas when using either an electronic refrigerant leak detector or fluorescent dye leak detector.
- If dye is observed, confirm the leak with an approved electronic refrigerant leak detector. It is possible a prior leak was repaired and not properly cleaned.
- When searching for leaks, do not stop when one leak is found but continue to check for additional leaks at all system components and connections.
- When searching for refrigerant leaks using an electronic leak detector, move the probe along the suspected leak area at 25 to 50 mm (1 to 2 in) per second an no further than 1/4 inch from the component.

**NOTE:**
**Moving the electronic leak detector probe slower and closer to the suspected leak area will improve the chances of finding a leak.**

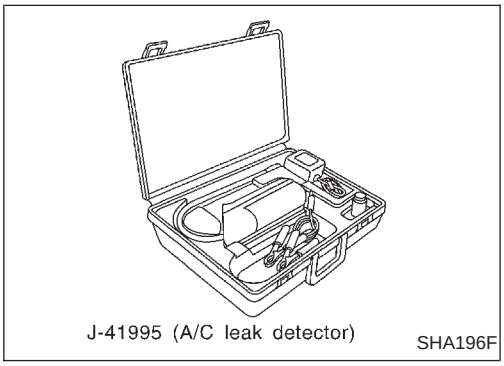
J-41995 (A/C leak detector)
SHA196F

## Electronic Refrigerant Leak Detector

### PRECAUTIONS FOR HANDLING LEAK DETECTOR

When performing a refrigerant leak check, use a J-41995 electronic refrigerant leak detector or equivalent. Ensure that the instrument is calibrated and set properly per the operating instructions.
The leak detector is a delicate device. In order to use the leak detector properly, read the operating instructions and perform any specified maintenance.

- **Other gases in the work area or substances on the A/C components, for example, anti-freeze, windshield washer fluid, solvents and lubricants, may falsely trigger the leak detector. Make sure the surfaces to be checked are clean. Clean with a dry cloth or blow off with shop air.**
- **Do not allow the sensor tip of the detector to contact with any substance. This can also cause false readings and may damage the detector.**

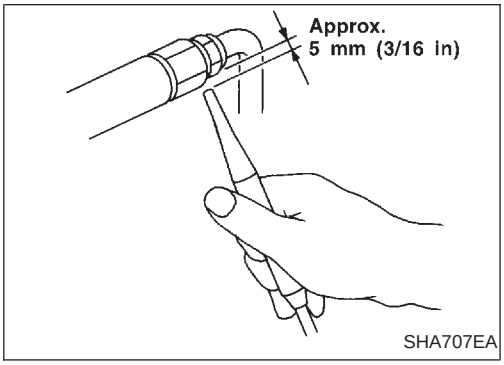

SHA707EA

1. Position probe approximately 5 mm (3/16 in) away from point to be checked.

## Electronic Refrigerant Leak Detector (Cont'd)

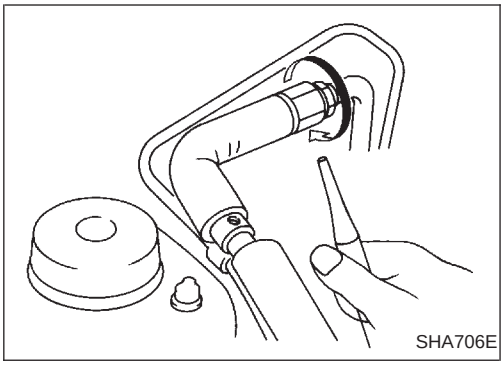


2. When testing, circle each fitting completely with probe.

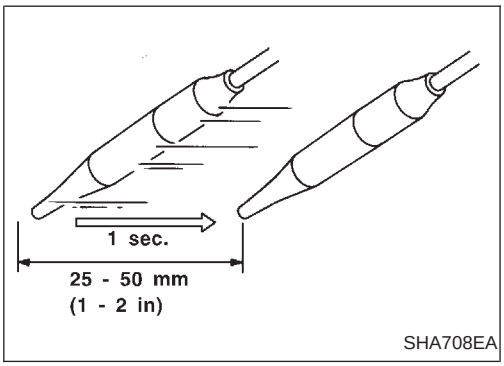


3. Move probe along component approximately 25 to 50 mm (1 to 2 in)/sec.

### CHECKING PROCEDURE

**To prevent inaccurate or false readings, make sure there is no refrigerant vapor, shop chemicals or smoke in the vicinity of the vehicle. Perform the leak test in a calm area (low air/wind movement) so that the leaking refrigerant is not dispersed.**

1. Turn engine off.
2. Connect a suitable A/C manifold gauge set to the A/C service ports.
3. Check if the A/C refrigerant pressure is at least 345 kPa (3.52 kg/cm$^2$, 50 psi) above 16°C (61°F). If less than specification, recovery/evacuate and recharge the system with the specified amount of refrigerant.
   NOTE: At temperatures below 16°C (61°F), leaks may not be detected since the system may not reach 345 kPa (3.52 kg/cm$^2$, 50 psi).
4. Conduct the leak test from the high side (compressor discharge ⓐ to evaporator inlet ⓖ) to the low side (drain hose ⓗ to shaft seal ⓜ). Refer to HA-130.
   Perform a leak check for the following areas carefully. Clean the component to be checked and move the leak detector probe completely around the connection/component.

- **Compressor**
  Check the fitting of high and low pressure hoses, relief valve and shaft seal.
- **Liquid tank**
  Check the pressure switch, tube fitting, weld seams and the fusible plug mounts.
- **Service valves**
  Check all around the service valves. Ensure service valve caps are secured on the service valves (to prevent leaks).
  NOTE: After removing A/C manifold gauge set from service valves, wipe any residue from valves to prevent any false readings by leak detector.

## Electronic Refrigerant Leak Detector (Cont'd)

- **Cooling unit (Evaporator)**

  With engine "off", turn blower fan on "High" for at least 15 seconds to dissipate any refrigerant trace in the cooling unit. Wait a minimum of ten minutes accumulation time* before inserting the leak detector probe into the drain hose. (Keep the probe inserted for at least ten seconds.) Use caution not to contaminate the probe tip with water or dirt that may be in the drain hose.

  *: (Refer to the manufacturer's recommended procedure for actual wait time.)

5. If a leak detector detects a leak, verify at least once by blowing compressed air into area of suspected leak, then repeat check as outlined above.
6. Do not stop when one leak is found. Continue to check for additional leaks at all system components. If no leaks are found, perform steps 7 - 10.
7. Start engine.
8. Set the heater A/C control as follows:
   a. A/C switch ON
   b. Face mode
   c. Recirculation switch ON
   d. Max cold temperature
   e. Fan speed high
9. Run engine at 1,500 rpm for at least 2 minutes.
10. Turn engine off and perform leak check again, following steps 4 through 6 above.

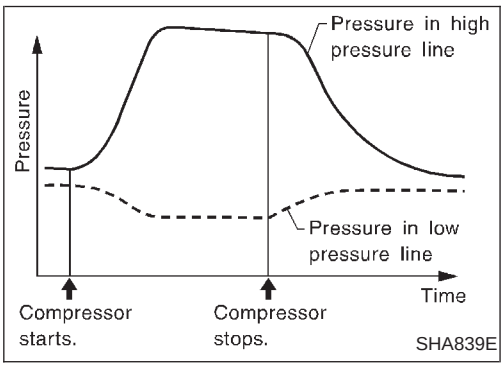


**Refrigerant leaks should be checked immediately after stopping the engine. Begin with the leak detector at the compressor. The pressure on the high pressure side will gradually drop after refrigerant circulation stops and pressure on the low pressure side will gradually rise, as shown in the graph. Some leaks are more easily detected when pressure is high.**

11. Before connecting ACR4 to vehicle, check ACR4 gauges. No refrigerant pressure should be displayed. If NG, recover refrigerant from equipment lines.
12. Confirm refrigerant purity in supply tank using ACR4 and refrigerant identifier. If NG, refer to "Contaminated refrigerant", HA-3.
13. Connect ACR4 to vehicle. Confirm refrigerant purity in vehicle A/C system using ACR4 and refrigerant identifier. If NG, refer to "Contaminated refrigerant", HA-3.
14. Discharge A/C system using approved refrigerant recovery equipment. Repair the leaking fitting or component as necessary.

## Electronic Refrigerant Leak Detector (Cont'd)

15. Evacuate and recharge A/C system and perform the leak test to confirm no refrigerant leaks.
16. Conduct A/C performance test to ensure system works properly.

## Fluorescent Dye Leak Detector

### PRECAUTIONS FOR FLUORESCENT DYE LEAK DETECTION

- The fluorescent dye leak detector is not a replacement for an electronic refrigerant leak detector. The fluorescent dye leak detector should be used in conjunction with an electronic refrigerant leak detector (J-41995) to pinpoint refrigerant leaks.
- For your safety and your customer's satisfaction, read and follow all manufacturer's operating instructions and precautions prior to performing the work.
- Refer to "Precautions for Leak Detection Dye", HA-4.

### CHECKING SYSTEM FOR LEAKS USING THE FLUORESCENT LEAK DETECTOR

1. Check A/C system for leaks using the UV lamp and safety glasses (J-42220) in a low sunlight area (area without windows preferable). Illuminate all components, fittings and lines. The dye will appear as a bright green/yellow area at the point of leakage. Fluorescent dye observed at the evaporator drain opening indicates an evaporator core assembly (tubes, core or TXV) leak.
2. If the suspected area is difficult to see, use an adjustable mirror or wipe the area with a clean shop rag or cloth, then check the cloth with the UV lamp for dye residue.
3. Confirm any suspected leaks with an approved electronic refrigerant leak detector.
4. After the leak is repaired, remove any residual dye using dye cleaner (J-43872) to prevent future misdiagnosis.
5. Perform a system performance check and verify the leak repair with an approved electronic refrigerant leak detector.

### DYE INJECTION

(This procedure is only necessary when re-charging the system or when the compressor has seized and was replaced.)
Refer to "Precautions for Leak Detection Dye", HA-4.

1. Check A/C system static (at rest) pressure. Pressure must be at least 345 kPa (3.52 kg/cm$^2$, 50 psi).
2. Pour one bottle (1/4 ounce / 7.4 cc) of the A/C refrigerant dye into the injector tool (J-41459).
3. Connect the injector tool to the A/C LOW PRESSURE side service fitting.
4. Start engine and switch A/C ON.
5. With the A/C operating (compressor running), inject one bottle (1/4 ounce / 7.4 cc) of fluorescent dye through the low-pressure service valve using dye injector tool J-41459 (refer to the manufacturer's operating instructions).
6. With the engine still running, disconnect the injector tool from the service fitting.

**CAUTION:**
**Be careful not to allow dye to spray or drip when disconnecting the injector from the system.**

## Fluorescent Dye Leak Detector (Cont'd)

**NOTE:**

**If repairing the A/C system or replacing a component, pour the dye directly into the open system connection and proceed with the service procedures.**

7. Operate the A/C system for a minimum of 20 minutes to mix the dye with the system oil. Depending on the leak size, operating conditions and location of the leak, it may take from minutes to days for the dye to penetrate a leak and become visible.

## Compressor Mounting

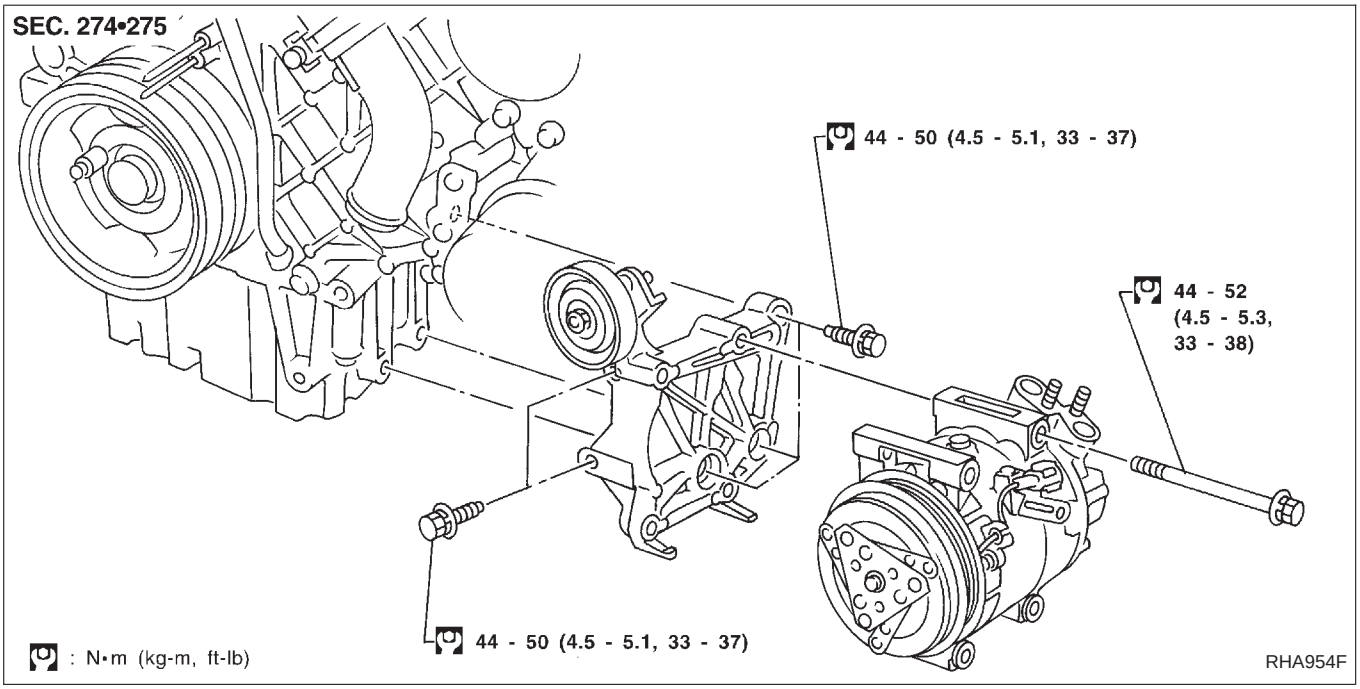


## Belt Tension

- **Refer to MA section.**

## Fast Idle Control Device (FICD)

- **Refer to EC section.**

## Compressor

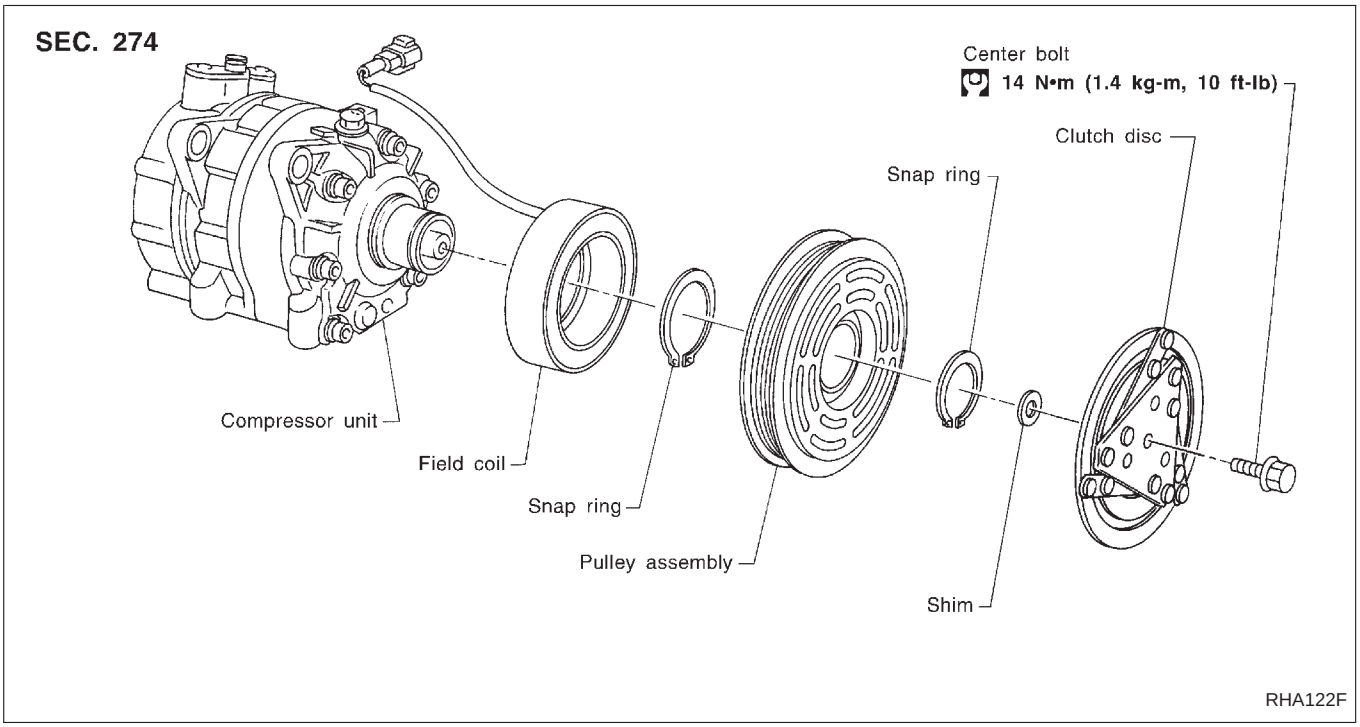


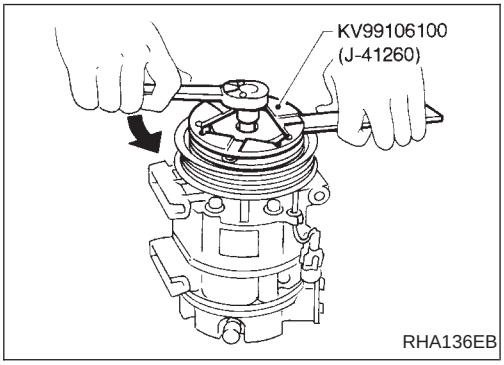


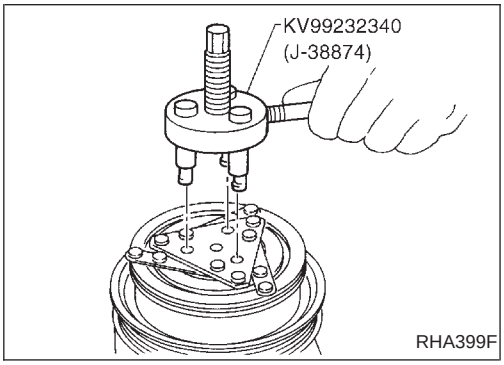


## Compressor Clutch

### REMOVAL

- When removing center bolt, hold clutch disc with clutch disc wrench.

## Compressor Clutch (Cont'd)

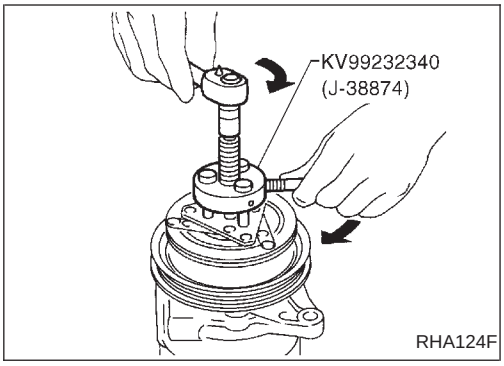


- Remove the clutch disc using the clutch disc puller.
  Insert the holder's three pins into the holes in the clutch disc. Rotate the holder clockwise to hook it onto the plate. Then, tighten the center bolt to remove the clutch disc.
  After removing the clutch disc, remove the shims from either the drive shaft or the clutch disc.

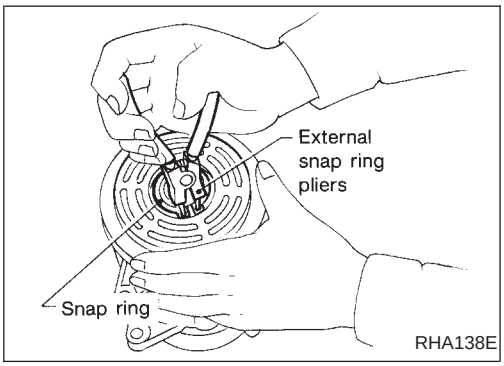


- Remove the snap ring using external snap ring pliers.

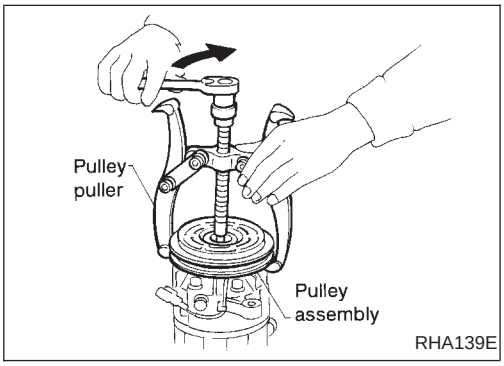


- Pulley removal
  Position the center pulley puller on the end of the drive shaft, and remove the pulley assembly using any commercially available pulley puller.
  **To prevent the pulley groove from being deformed, the puller claws should be positioned onto the edge of the pulley assembly.**

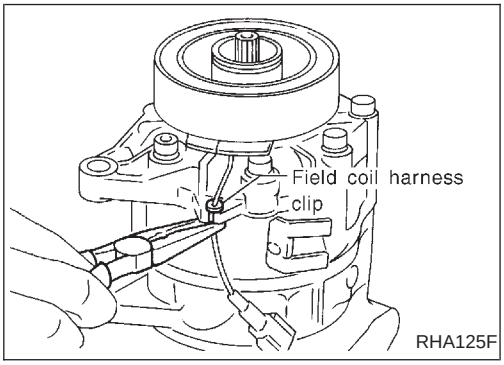


- Remove the field coil harness clip using a pair of pliers.

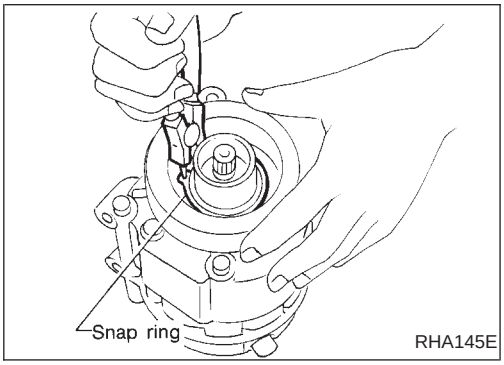


- Remove the snap ring using external snap ring pliers.

## Compressor Clutch (Cont'd)

### INSPECTION

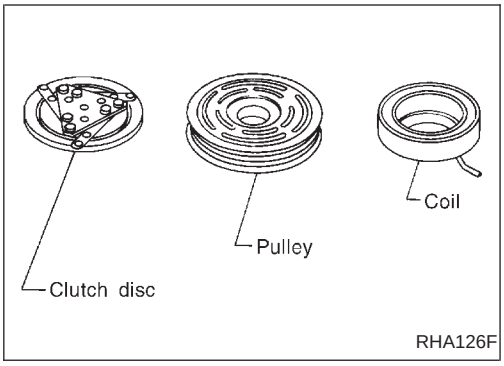


#### Clutch disc

If the contact surface shows signs of damage due to excessive heat, replace clutch disc and pulley.

#### Pulley

Check the appearance of the pulley assembly. If the contact surface of pulley shows signs of excessive grooving, replace clutch disc and pulley. The contact surfaces of the pulley assembly should be cleaned with a suitable solvent before reinstallation.

#### Coil

Check coil for loose connection or cracked insulation.

### INSTALLATION

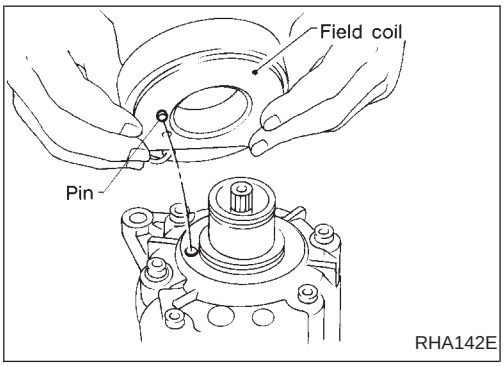


- Install the field coil.

**Be sure to align the coil's pin with the hole in the compressor's front head.**

- Install the field coil harness clip using a screwdriver.

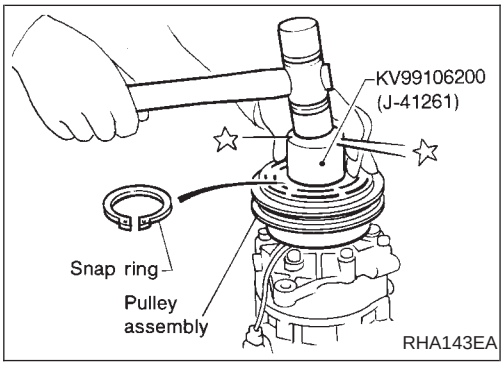


- Install the pulley assembly using the installer and a hand press, and then install the snap ring using snap ring pliers.

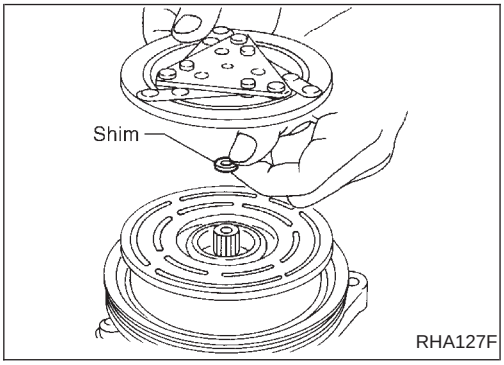


- Install the clutch disc on the drive shaft, together with the original shim(s). Press the clutch disc down by hand.

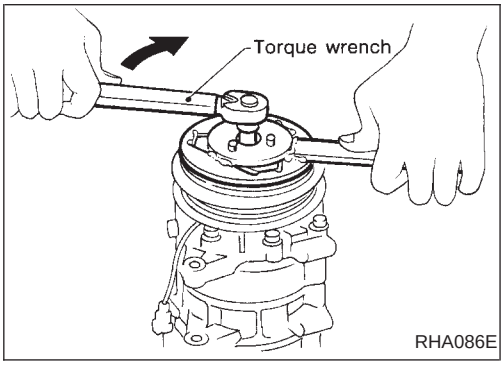


- Using the holder to prevent clutch disc rotation, tighten the bolt to 14 N·m (1.4 kg-m, 10 ft-lb) torque.

**After tightening the bolt, check that the pulley rotates smoothly.**

## Compressor Clutch (Cont'd)

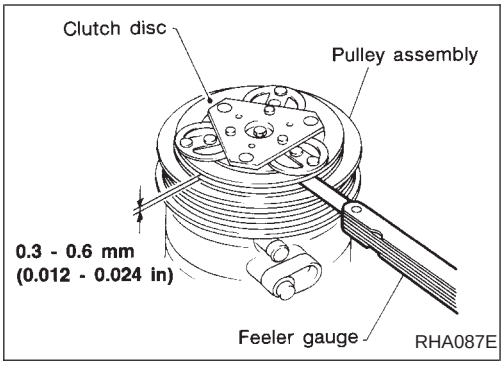


- Check clearance around the entire periphery of clutch disc.
  **Disc-to-pulley clearance:**
  **0.3 - 0.6 mm (0.012 - 0.024 in)**
  If the specified clearance is not obtained, replace adjusting spacer and readjust.

### BREAK-IN OPERATION

When replacing compressor clutch assembly, always carry out the break-in operation. This is done by engaging and disengaging the clutch about thirty times. Break-in operation raises the level of transmitted torque.

## Ventilation Air Filter

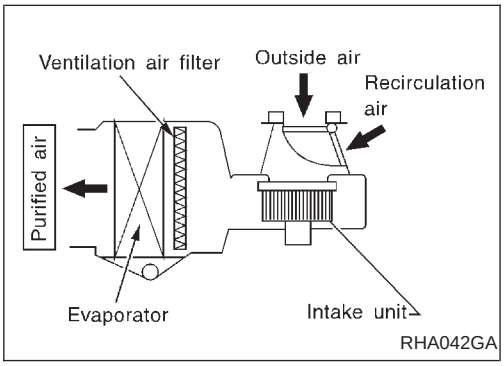


### FUNCTION

Air inside passenger compartment is kept clean at either recirculation or fresh mode by installing ventilation air filter into cooling unit.

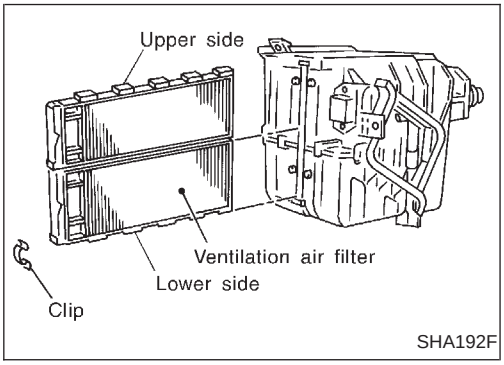


### REPLACEMENT PROCEDURES

1. Remove undercover.
2. Remove glove box.
3. Remove instrument reinforcement from instrument panel.
4. Remove ventilation air filter fixed clip.
5. Take out the lower side ventilation air filter from cooling unit.
6. Then slide upper side filter to the bottom position and take off the ventilation air filter from the cooling unit.
7. Replace with new one and reinstall on cooling unit.
8. Reinstall instrument reinforcement, glove box and undercover.

# General Specifications

## COMPRESSOR

| | |
|---|---|
| Model | CALSONIC make<br>V-6 |
| Type | V-6 variable displacement |
| Displacement $cm^3$ (cu in)/rev. | |
| Max. | 184 (11.228) |
| Min. | 10.5 (0.641) |
| Cylinder bore x stroke mm (in) | 37 (1.46)<br>x [1.6 - 28.6 (0.063 - 1.126)] |
| Direction of rotation | Clockwise<br>(viewed from drive end) |
| Drive belt | Poly V |

## LUBRICANT

| | |
|---|---|
| Model | CALSONIC make<br>V-6 |
| Name | Nissan A/C System Oil<br>Type S |
| Part number | KLH00-PAGS0 |
| Capacity mℓ (US fl oz, Imp fl oz) | |
| Total in system | 200 (6.8, 7.0) |
| Compressor (Service part) charging amount | 200 (6.8, 7.0) |

## REFRIGERANT

| | |
|---|---|
| Type | HFC-134a (R-134a) |
| Capacity kg (lb) | 0.675 - 0.725 (1.488 - 1.599) |

# Inspection and Adjustment

## ENGINE IDLING SPEED (When A/C is ON)

- Refer to EC section.

## BELT TENSION

- Refer to Checking Drive Belts (MA section).