SECTION FAX
FRONT AXLE

CONTENTS

PREPARATION 2
Special Service Tools (SST) 2
Commercial Service Tools 2
NOISE, VIBRATION AND HARSHNESS (NVH) TROUBLESHOOTING 3
NVH Troubleshooting Chart 3
FRONT WHEEL HUB AND KNUCKLE 4
On-Vehicle Inspection and Service 4
WHEEL BEARING INSPECTION 4
Removal and Installation 4
REMOVAL 4
INSPECTION AFTER REMOVAL 5
INSTALLATION 5
SERVICE DATA 7
Wheel Bearing 7

PREPARATION

PFP:00002

Special Service Tools (SST)

EDS000WC

The actual shapes of Kent-Moore tools may differ from those of special service tools illustrated here.

Tool number (Kent-Moore No.) Tool name		Description
KV401 04100 (—) Attachment	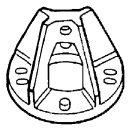 ZZA0804D	Removing wheel hub and bearing assembly
ST3623 0000 (J25840-A) Sliding hammer	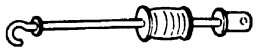 ZZA0803D	Removing wheel hub and bearing assembly
KV401 05220 (—) a:ϕ75 mm (2.95 in) b:ϕ62 mm (2.44 in) Drift	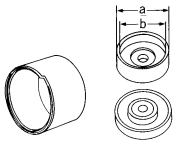 ZZA1101D	Removing sensor rotor
KV38100500 (—) a:ϕ80 mm (3.15 in) b:ϕ60 mm (2.36 in) Drift	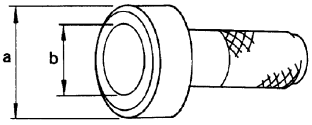 ZZA0701D	Installing hub cap

Commercial Service Tools

EDS000WD

Tool name		Description
Power tool	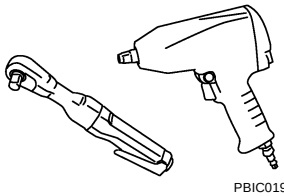 PBIC0190E	● Removing wheel nuts ● Removing brake caliper assembly

NOISE, VIBRATION AND HARSHNESS (NVH) TROUBLESHOOTING

PFP:00003

NVH Troubleshooting Chart

EDS000WE

Use chart below to help you find the cause of the symptom. If necessary, repair or replace these parts.

Reference page			FAX-4	—	FAX-4	NVH in WT section.	NVH in WT section.	NVH in PS section.
Possible cause and SUSPECTED PARTS			Improper installation, looseness	Parts interference	Wheel bearing damage	TIRES	ROAD WHEEL	STEERING
Symptom	FRONT AXLE	Noise	×	×		×	×	×
		Shake	×	×		×	×	×
		Vibration	×	×		×		×
		Shimmy	×	×		×	×	×
		Judder	×			×	×	×
		Poor quality ride or handling	×	×	×	×	×	

×: Applicable

FRONT WHEEL HUB AND KNUCKLE

PFP:40202

On-Vehicle Inspection and Service

EDS000WF

Make sure the mounting conditions (looseness, back lash) of each component and component status (wear, damage) are normal.

WHEEL BEARING INSPECTION

- Move wheel hub in the axial direction by hand. Make sure there is no looseness of wheel bearing.

  Axial end play limit : 0.05 mm (0.002 in) or less

- Rotate wheel hub and make sure there is no unusual noise or other irregular conditions. If there are any irregular conditions, replace wheel hub and bearing assembly.

Removal and Installation

EDS000WG

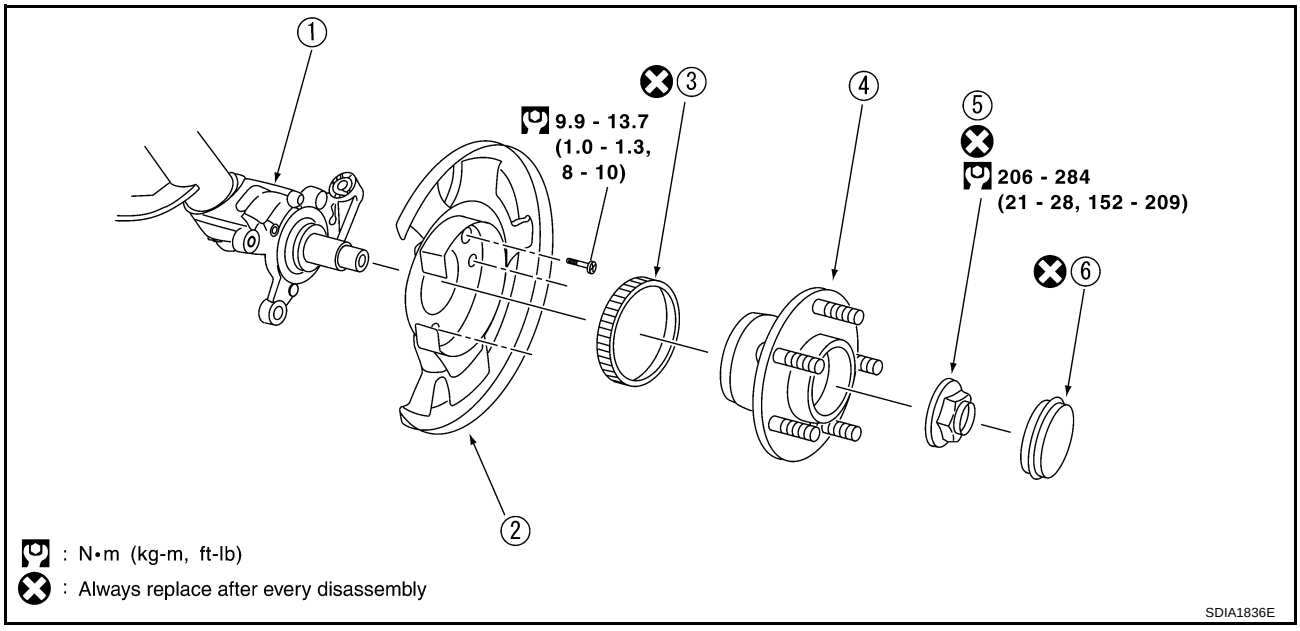

1.	Strut assembly	2.	Splash guard	3.	Sensor rotor
4.	Wheel hub and bearing assembly	5.	Lock nut	6.	Hub cap

REMOVAL

1. Remove tire from vehicle with power tool.
2. Remove brake caliper with power tool. Hang it in a place where it will not interfere with work. Refer to BR-23, "FRONT DISC BRAKE" .

   NOTE:
   Avoid depressing brake pedal while brake caliper is removed.
3. Use a hub cap pliers to remove hub cap from wheel hub and bearing assembly.
4. Pull up caulked area of lock nut with flat-bladed screwdriver.
5. Remove disc rotor.

   NOTE:
   If it is difficult to remove disc rotor, remove it by tapping with rubber hammer.
6. Remove lock nut, then remove wheel hub and bearing assembly from strut assembly.

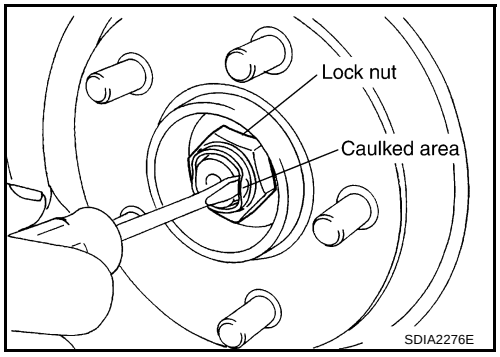

- When it is hard to remove wheel hub and bearing assembly from strut assembly due to burnout, use a attachment (SST) and sliding hammer (SST) for removal.

7. Remove fixing screws of splash guard, then remove splash guard from strut assembly.

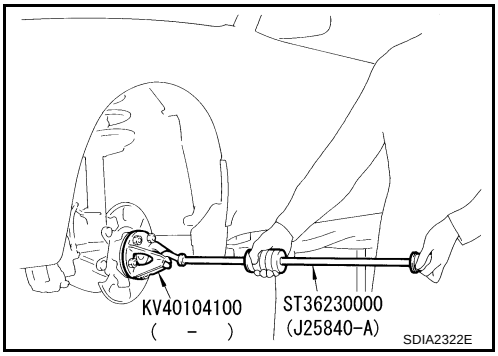

8. As shown in the figure, using a puller (suitable tool), drift (SST) to remove wheel hub and bearing assembly from sensor rotor.

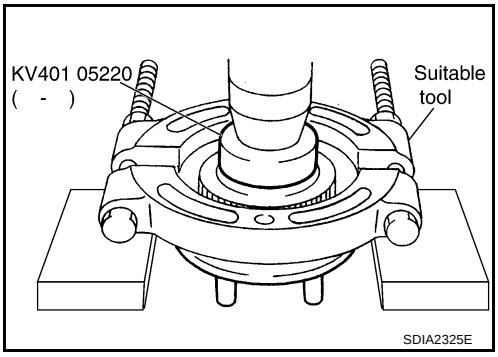

INSPECTION AFTER REMOVAL

Check for deformity, cracks and damage on each parts, replace if neacessary.

INSTALLATION

- Refer to FAX-4, "Removal and Installation" for tightening torque. Install in the reverse order of removal.

  NOTE:
  Refer to component parts location and do not reuse non-reusable parts.

- Install hub cap using a drift (SST).

  NOTE:
  Do not reuse hub cap.

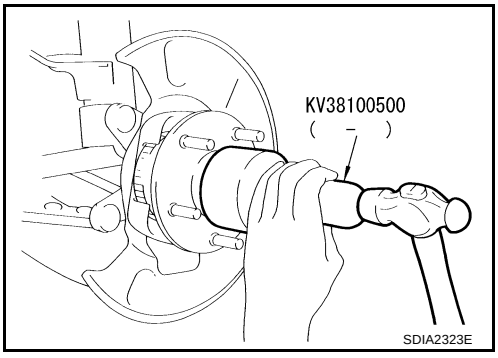

- Press-fit sensor rotor into wheel hub and bearing assembly using a drift (suitable tool).

  NOTE:
  - Do not reuse sensor rotor.
  - Sensor rotor must be installed with its grooved side facing inboard.

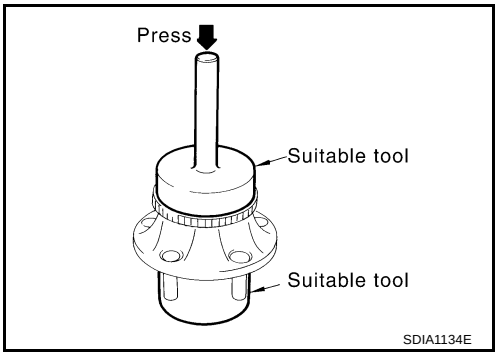

- After installation of lock nut, be sure to perform caulking. Refer to figure for caulking procedure.
- After removing/installing or replacing axle components, check wheel alignment. Refer to FSU-5, "Wheel Alignment Inspection" .
- After adjusting wheel alignment, adjust neutral position of steering angle sensor. Refer to BRC-6, "Adjustment of Steering Angle Sensor Neutral Position" .

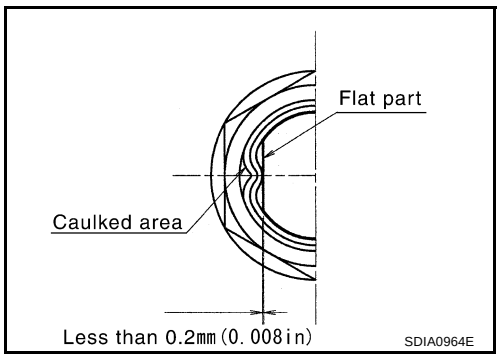

SERVICE DATA

PFP:00030

Wheel Bearing

EDS000WI

Axial end play limit	0.05 mm (0.002 in) or less