SECTION WW
WIPER, WASHER & HORN

CONTENTS

PRECAUTION 2
Precautions for Supplemental Restraint System (SRS) “AIR BAG” and “SEAT BELT PRE-TENSIONER” 2
Wiring Diagrams and Trouble Diagnosis 2
FRONT WIPER AND WASHER SYSTEM 3
Component Parts and Harness Connector Location 3
System Description 3
WIPER OPERATION 3
WASHER OPERATION 5
Schematic 6
Wiring Diagram — WIPER — 7
Terminals and Reference Values for BCM 10
Work Flow 10
Preliminary Check 10
SETTING CHANGE FUNCTIONS 10
INSPECTION FOR POWER SUPPLY AND GROUND CIRCUIT 11
CONSULT-II Function 11
CONSULT-II BASIC OPERATION 12
WORK SUPPORT 13
DATA MONITOR 13
ACTIVE TEST 13
On Board Diagnosis 13
DIAGNOSIS ITEM FOR FRONT WIPER AND WASHER SYSTEM 13
SWITCH MONITOR 14
Intermittent Wiper Does Not Operate 15
Intermittent Time of Wiper Cannot be Adjusted 17
Wiper and Washer Activate Individually but Not In Combination 17
Intermittent Wiper Operates, but There Is No Change In Intermittent Time Between When Vehicle Is Stopped and Moving 18
Wiper and Washer Activate Individually but Intermittent Wiper and Washer Combination Does Not Operate 19
Removal and Installation of Front Wiper Arms, Adjustment of Front Wiper Arms Stop Location 20
Removal and Installation of Front Wiper Motor and Linkage 21
REMOVAL 21
INSTALLATION 21
Washer Nozzle Adjustment 22
Washer Tube Layout 22
Removal and Installation of Washer Nozzle 23
REMOVAL 23
INSTALLATION 23
Inspection of Washer Nozzle 23
INSPECTION OF CHECK VALVE 23
Wiper and Washer Switch Circuit Check 23
INSPECTION OF SWITCH CIRCUIT 23
Removal and Installation of Front Wiper and Washer Switch 23
REMOVAL 23
INSTALLATION 24
Removal and Installation of Washer Tank 24
REMOVAL 24
INSTALLATION 24
Removal and Installation for Washer Motor 25
REMOVAL 25
INSTALLATION 25
CIGARETTE LIGHTER 26
Wiring Diagram — CIGAR — 26
Removal and Installation 27
REMOVAL 27
INSTALLATION 27
POWER SOCKET 28
Wiring Diagram — CIGAR — 28
Removal and Installation 29
REMOVAL 29
INSTALLATION 29
HORN 30
Wiring Diagram — HORN — 30
Removal and installation 31
REMOVAL (HORN HI) 31
INSTALLATION (HORN HI) 31
REMOVAL (HORN LOW) 31
INSTALLATION (HORN LOW) 31

PRECAUTION

PFP:00011

Precautions for Supplemental Restraint System (SRS) “AIR BAG” and “SEAT BELT PRE-TENSIONER”

EKS00F5H

The Supplemental Restraint System such as “AIR BAG” and “SEAT BELT PRE-TENSIONER”, used along with a front seat belt, helps to reduce the risk or severity of injury to the driver and front passenger for certain types of collision. This system includes seat belt switch inputs and dual stage front air bag modules. The SRS system uses the seat belt switches to determine the front air bag deployment, and may only deploy one front air bag, depending on the severity of a collision and whether the front occupants are belted or unbelted.
Information necessary to service the system safely is included in the SRS and SB section of this Service Manual.

WARNING:

- **To avoid rendering the SRS inoperative, which could increase the risk of personal injury or death in the event of a collision which would result in air bag inflation, all maintenance must be performed by an authorized NISSAN/INFINITI dealer.**
- **Improper maintenance, including incorrect removal and installation of the SRS, can lead to personal injury caused by unintentional activation of the system. For removal of Spiral Cable and Air Bag Module, see the SRS section.**
- **Do not use electrical test equipment on any circuit related to the SRS unless instructed to in this Service Manual. SRS wiring harnesses can be identified by yellow and/or orange harnesses or harness connectors.**

Wiring Diagrams and Trouble Diagnosis

EKS001IQ

When you read wiring diagrams, refer to the followings:

- Refer to GI-14, "How to Read Wiring Diagrams" .
- Refer to PG-2, "POWER SUPPLY ROUTING" for power distribution circuit.

When you perform trouble diagnosis, refer to the followings:

- Refer to GI-10, "HOW TO FOLLOW TEST GROUPS IN TROUBLE DIAGNOSES" .
- Refer to GI-26, "How to Perform Efficient Diagnosis for an Electrical Incident" .

FRONT WIPER AND WASHER SYSTEM

PFP:28810

Component Parts and Harness Connector Location

EKS00EXS

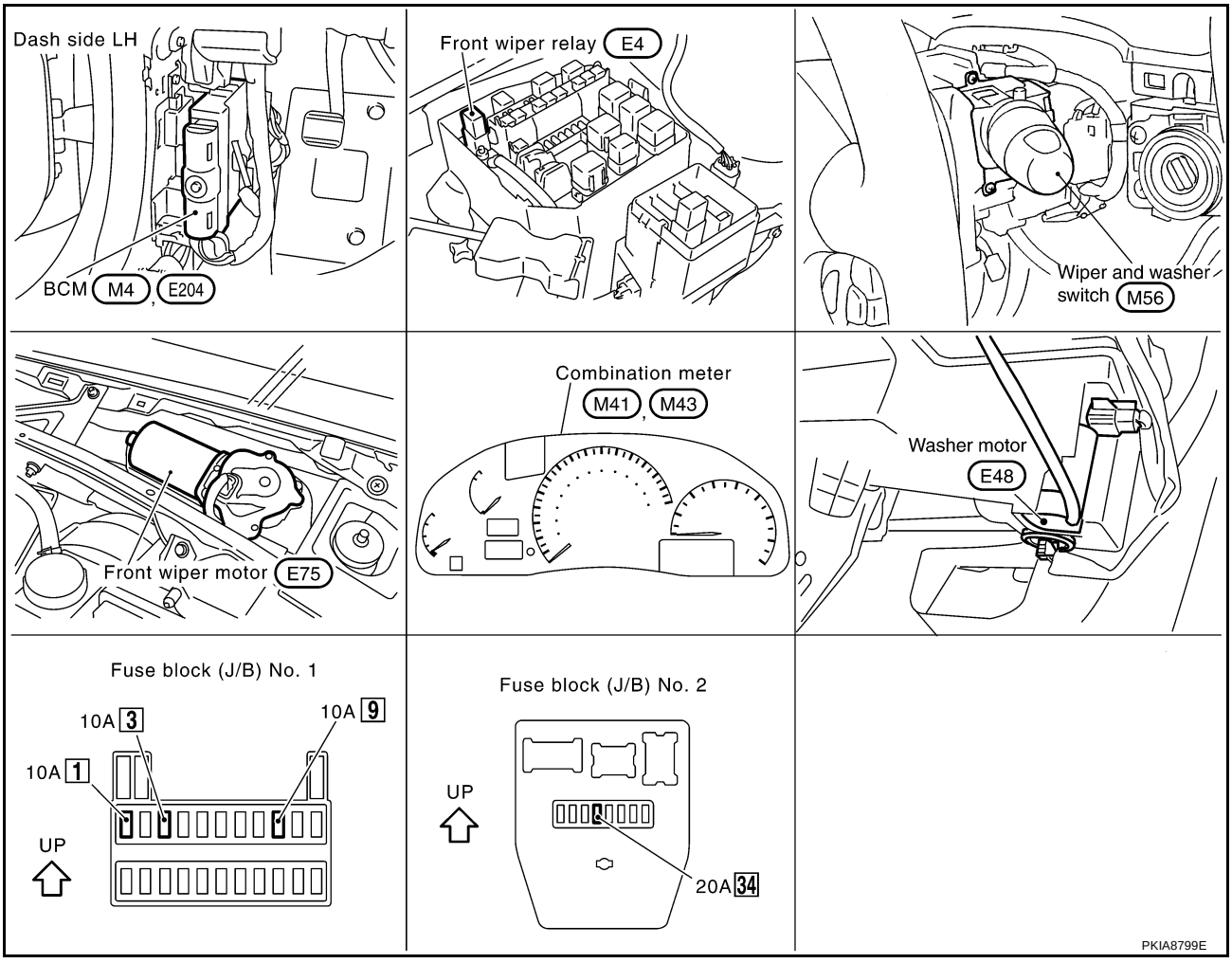

System Description

EKS00EXR

Through the adoption of vehicle speed detect-type intermittent wiper, Front Wiper System changes wiper's intermittent time when the engine is stopped and while driving.
Vehicle speed signal is send from the combination meter to BCM. BCM controls intermittent activation time and coupled activation of washer and wiper.

WIPER OPERATION

Description

The wiper switch is controlled by a lever built into the combination switch.
There are three wiper switch positions.

- LO speed
- HI speed
- INT (intermittent)

Power is supplied at all times

- through 10A fuse [No.3, located in the fuse block (J/B) No.1]
- to BCM terminal 105.

With the ignition switch in the ON or START position, power is supplied

- through 20A fuse [No.34, located in the fuse block (J/B) No.2]
- to front wiper motor terminal 4 and
- to front wiper relay terminal 1
- through 10A fuse [No.1, located in the fuse block (J/B) No.1]

- to BCM terminal 68
- through 10A fuse [No.9, located in the fuse block (J/B) No.1]
- to combination meter terminal 59.

Ground is supplied to front wiper switch terminals 17 and 20 through grounds M25 and M115.

Low (MIST) and High Speed Wiper Operation

When the front wiper switch is placed in the LO or MIST position, ground is supplied

- through front wiper switch terminal 14
- to front wiper motor terminal 6.

With power and ground supplied, the front wiper motor operates at low speed.

When the front wiper switch is placed in the HI position, ground is supplied

- through front wiper switch terminal 16
- to front wiper motor terminal 5.

With power and ground supplied, the front wiper motor operates at high speed.

Auto Stop Operation

When the front wiper switch is placed in the OFF position, the front wiper motor will continue to operate until the wiper arms reach the base of the windshield (Auto stop). When the front wiper switch is placed in the OFF position, ground is supplied

- from front wiper switch terminal 14
- to front wiper motor terminal 6, in order to continue front wiper motor operation at low speed.

Ground is also supplied until the wiper arms reaches the base of the windshield

- through front wiper switch terminal 13
- to front wiper relay terminal 3
- through front wiper relay terminal 4
- to front wiper motor terminal 3
- through front wiper motor terminal 1, and
- through grounds E42 and E62.

When the wiper arms reach the base of the windshield, the switch in the front wiper motor moves to the “STOP” position. The ground path is interrupted and the front wiper motor stops.

Intermittent Operation

Intermittent operation is controlled by the BCM. When the front wiper switch is placed in the INT position, ground is supplied

- to BCM terminal 9
- from front wiper switch terminal 15
- through grounds M25 and M115.

The desired interval time is input

- to front wiper switch terminal 19
- from BCM terminal 48
- to BCM terminal 49
- from combination meter terminal 18 (vehicle speed pulse).

The desired interval time is input

- to front wiper relay terminal 2
- from BCM terminal 128.

With power and ground supplied, the front wiper relay is activated. When activated, an intermittent ground is supplied

- to front wiper motor terminal 6
- through front wiper switch terminal 14
- to front wiper switch terminal 13
- through front wiper relay terminal 3
- to front wiper relay terminal 5

- through grounds E24 and E44.

Front wiper motor operates at desired interval with BCM terminal 9 grounded. Intermittent operation can be adjusted from:

- Approx. 0.9 - 45sec. (when vehicle is stopped)
- Approx. 0.4 - 30 sec. (when vehicle is moving)

Judgement on vehicle stopped or moving:

- Stopped → Moving: More than 5 km/h (3 MPH)
- Moving → Stopped: Less than 2 km/h (1 MPH)

WASHER OPERATION

With the ignition switch in the ON or START position, power is supplied

- through 20A fuse [No. 34, located in the fuse block (J/B) No. 2]
- to front washer motor terminal 1.

When the lever is pulled to the WASH position, ground is supplied

- to front washer motor terminal 2, and
- to BCM terminal 4
- from front wiper switch terminal 18
- through front wiper switch terminal 17
- through grounds M25 and M115.

With power and ground supplied, the front washer motor operates. The front wiper motor operates at low speed for about 3 seconds. This feature is controlled by the BCM in the same manner as the intermittent operation.

Schematic

EKS00EXT

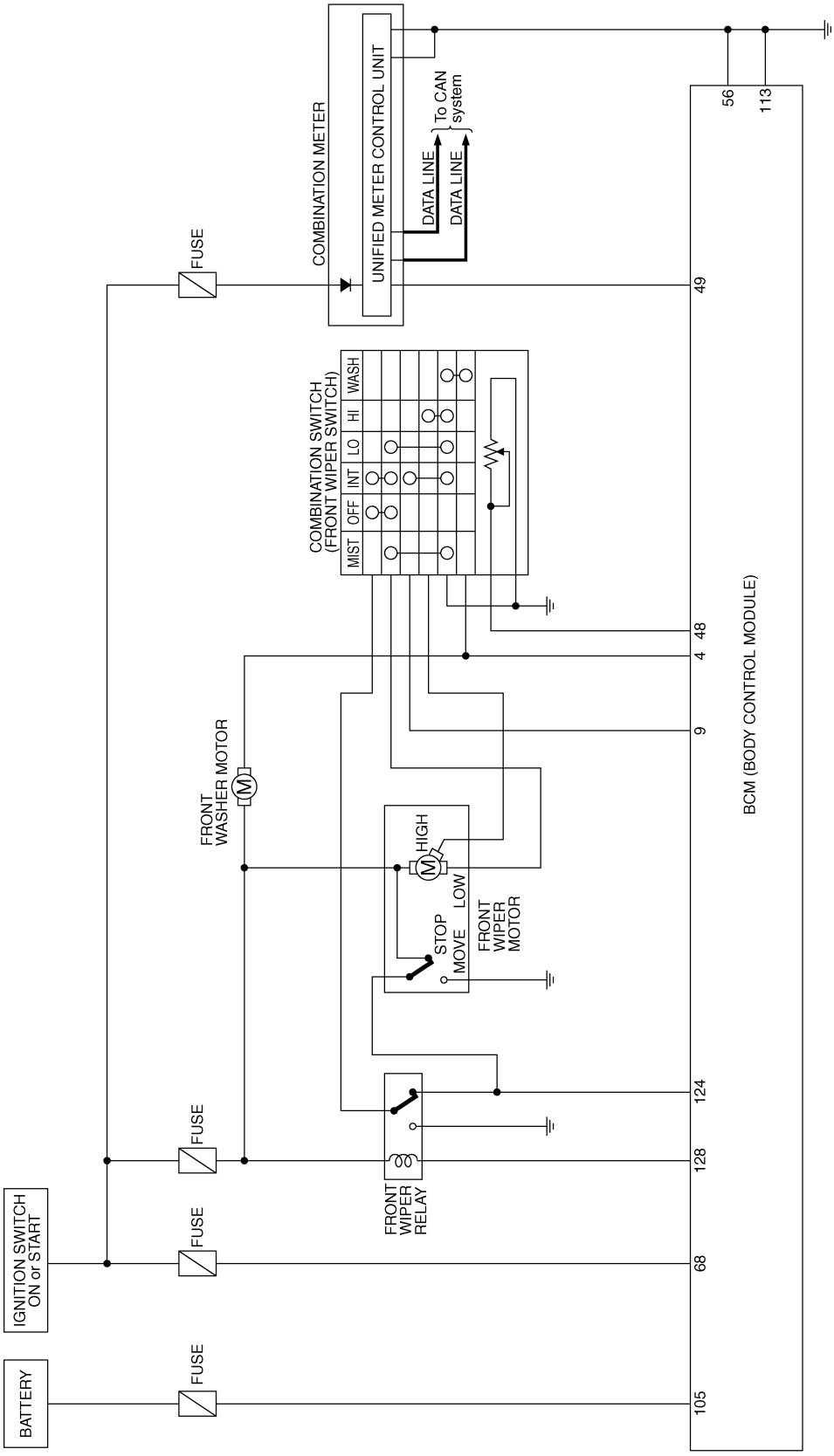

TKWM0105E

Wiring Diagram — WIPER —

EKS00EXU

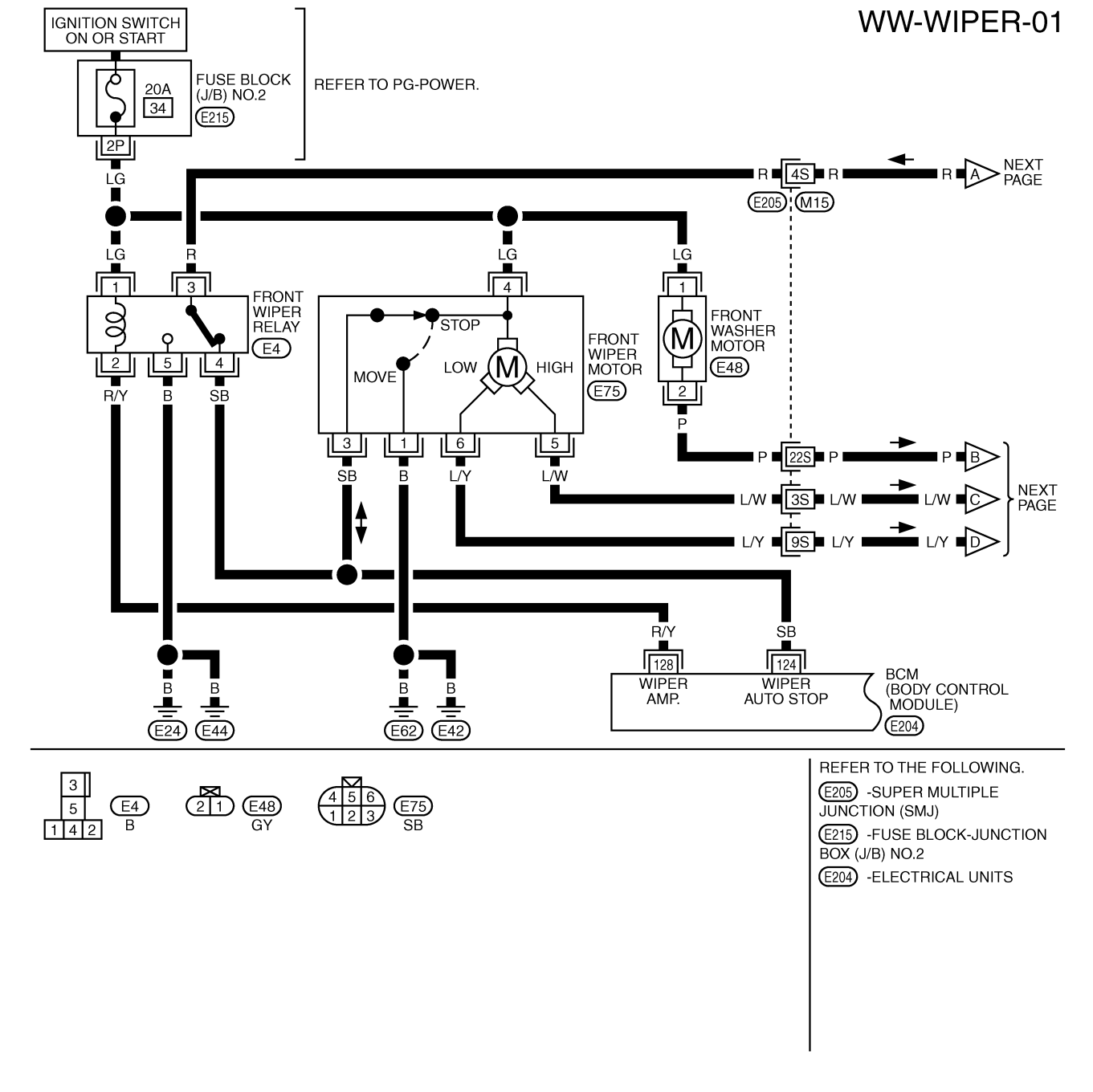

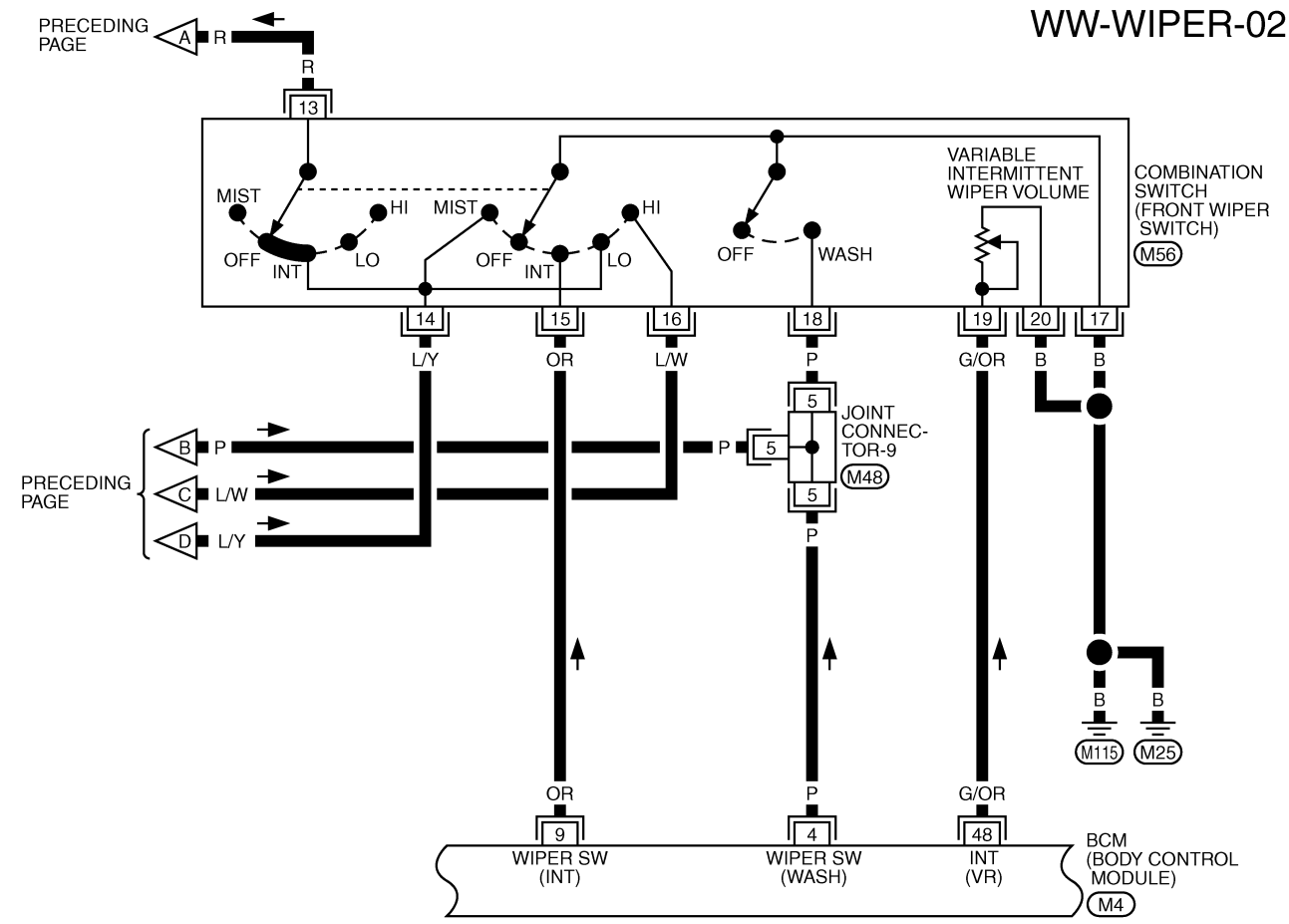

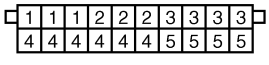

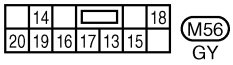

REFER TO THE FOLLOWING.

M4 -ELECTRICAL UNITS

TKWM0431E

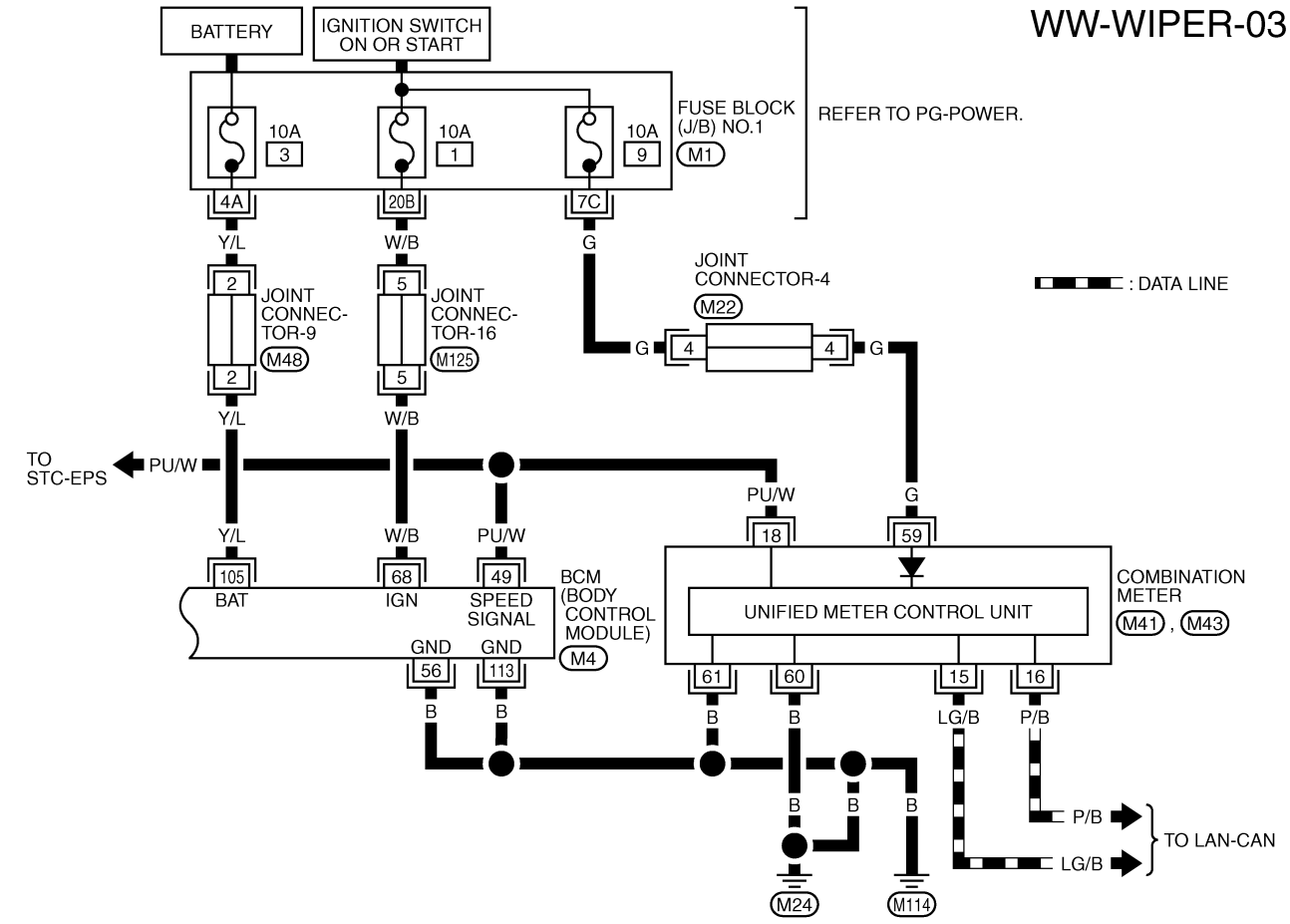

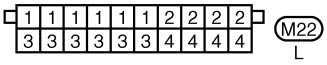

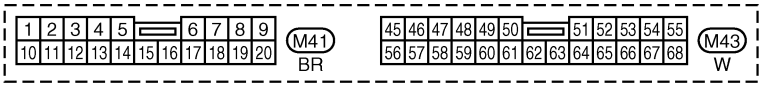

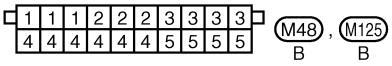

REFER TO THE FOLLOWING.

M1 -FUSE BLOCK-JUNCTION BOX (J/B) NO.1

M4 -ELECTRICAL UNITS

TKWM0432E

Terminals and Reference Values for BCM

EKS00EXV

Terminal No.	Wire color	Item	Condition			Reference value
			Ignition switch	Operation or condition		
4	P	Washer switch signal	ON	Front wiper switch	WASH	Approx. 0V
					OFF	Battery voltage
9	OR	Front wiper switch INT signal	ON	Front wiper switch	INT	Approx. 0V
					OFF	Approx. 8V
48	G/OR	Intermittent wiper volume signal	ON	Wiper intermittent interval	Long	Approx. 3.6V
					Short	Approx. 0V
49	PU/W	Vehicle speed signal (2-pulse)	ON	Vehicle speed approx. 40 km/h		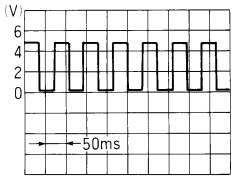 ELF1080D
56	B	Ground	ON	—		Approx. 0V
68	W/B	ignition on signal	ON	—		Battery voltage
105	Y/L	Battery power supply	OFF	—		Battery voltage
113	B	Ground	ON	—		Approx. 0V
124	SB	Front wiper auto stop signal	ON	Front wiper is moving.		Approx. 0V
				Front wiper is stopped.		Battery voltage
128	R/Y	Front wiper motor operation signal	ON	Front wiper switch: INT position (Wiper dial position 4)		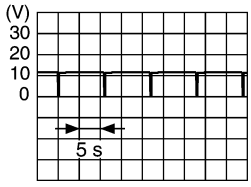 PKIA6250E

Work Flow

EKS00EXW

1. Confirm the symptom or customer complaint.
2. Understand the system description. Refer to WW-3, "System Description" .
3. Perform preliminary Check. Refer to WW-10, "Preliminary Check" .
4. According to the trouble diagnosis chart, repair or replace the cause of the malfunction.
5. Does wiper function operate normally? If it operates normally, GO TO 6. If not, GO TO 4.
6. INSPECTION END

Preliminary Check

EKS00EXX

SETTING CHANGE FUNCTIONS

- With CONSULT-II, each function can be changed in setting, refer to WW-13, "WORK SUPPORT" .

CAUTION:

After the setting was changed, the new setting will be maintained even if the battery was disconnected.

Setting change mode	CONSULT-II (WORK SUPPORT)	Description
Wiper intermittent speed control by vehicle speed	ON	Activated
	OFF	Inactivated

INSPECTION FOR POWER SUPPLY AND GROUND CIRCUIT

1. CHECK FUSE

Check if any of the following fuses in BCM are blown.

Unit	Power source	Fuse No.
BCM	Battery	3
	Ignition switch ON or START	1

Refer to WW-7, "Wiring Diagram — WIPER —" .

OK or NG

OK >> GO TO 2.
NG >> If fuse is blown, be sure to eliminate cause of malfunction before installing new fuse. Refer to PG-2, "POWER SUPPLY ROUTING" .

2. CHECK POWER SUPPLY CIRCUIT

1. Disconnect BCM connector.
2. Check voltage between BCM harness connector terminals and ground.

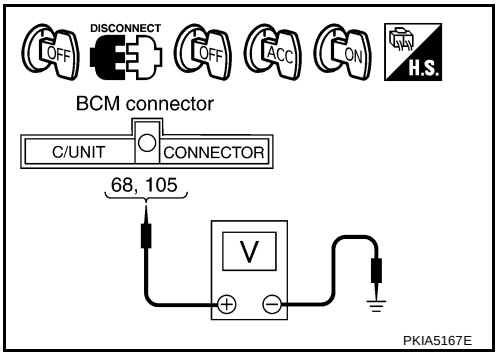

Terminals			Ignition switch position		
(+)		(-)	OFF	ACC	ON
Connector	Terminals (Wire color)				
M4	105 (Y/L)	Ground	Battery voltage	Battery voltage	Battery voltage
	68 (W/B)		0V	0V	Battery voltage

OK or NG

OK >> GO TO 3.
NG >> Check harness for open or short power supply circuit.

3. CHECK GROUND CIRCUIT

1. Turn ignition switch OFF.
2. Check continuity between BCM harness connector terminals and ground.

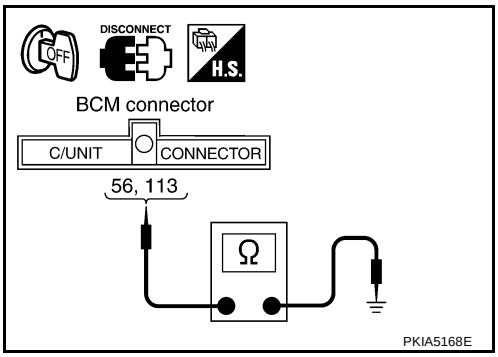

Terminals			Continuity
Connector	Terminal (Wire color)		
BCM (M4)	56 (B)	Ground	Yes
	113 (B)		

OK or NG

OK >> INSPECTION END
NG >> Repair harness.

CONSULT-II Function

EKS00EXY

- CONSULT-II executes the following functions by combining data received and command transmitted via the communication line from BCM. IVMS communication inspection, work support by part, self-diagnosis, data monitor, and active test display.

IVMS diagnosis part	Check item and diagnosis mode	Description
WIPER	WORK SUPPORT	Changes the setting for each function.
	DATA MONITOR	Displays data relative to BCM input signals and various control related data for each system.
	ACTIVE TEST	Device operation can be checked by applying a drive signal to device.
BCM PART NUMBER.		Displays BCM part No.

CONSULT-II BASIC OPERATION

1. With ignition switch OFF, connect “CONSULT-II” and “CONSULT-II CONVERTER” to data link connector, and turn ignition switch ON.

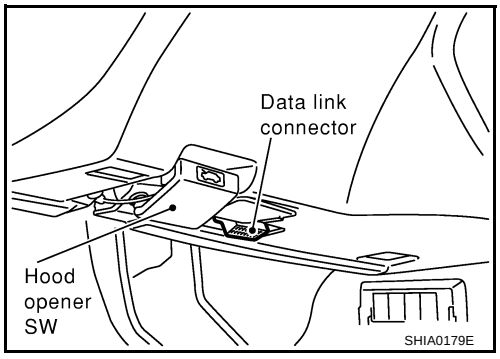

2. Touch “START (NISSAN BASED VHCL)”.

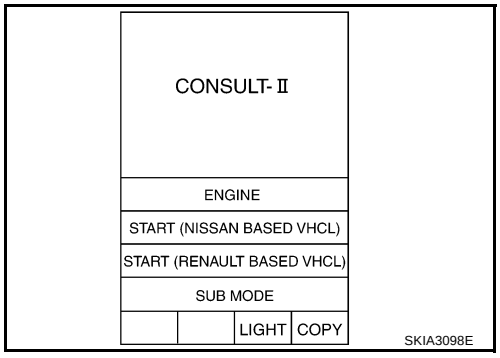

3. Touch “IVMS”.
   If “IVMS” is not indicated, refer to GI-38, "CONSULT-II Data Link Connector (DLC) Circuit" .

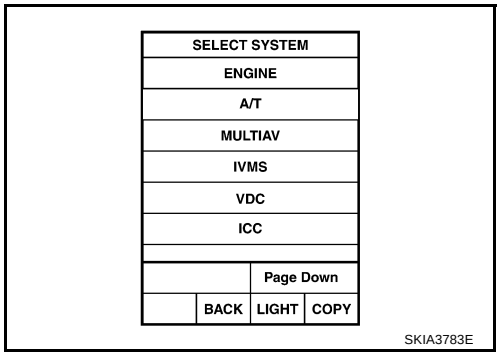

4. Check the model specification, and touch either “WITH SUNROOF” or “WITHOUT SUNROOF” on “SELECT SYS COND” SCREEN.
5. Touch “OK”. If the selection is wrong, touch “CANCEL”.
6. Select the desired part to be diagnosed on “SELECT TEST ITEM” screen.

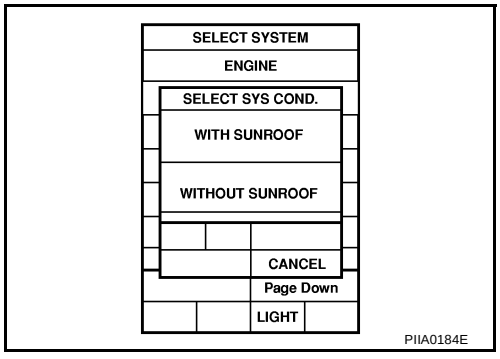

WORK SUPPORT

Operation Procedure

1. Touch “WIPER” on “SELECT TEST ITEM” screen.
2. Touch “WORK SUPPORT” on “SELECT DIAG MODE” screen.
3. Touch “WIP INT VHCL SPD ADJ” on “SELECT WORK ITEM” screen.
4. Touch “START”.
   - Wiper intermittent speed control by vehicle speed can be canceled or resumed.
5. Touch “CURRENT SETTING” for changing “CURRENT SETTING”.
   For no changing “CURRENT SETTING”, touch “END”.

“CURRENT SETTING”	Wiper intermittent speed control
“ON”	Activated
“OFF”	Inactivated

6. Touch “END” after customizing is completed.

DATA MONITOR

Operation Procedure

1. Touch “WIPER” on the “SELECT TEST ITEM” screen
2. Touch “DATA MONITOR” on the “SELECT DIAG MODE” screen.
3. Touch either “ALL SIGNALS” or “SELECTION FROM MENU” on the “DATA MONITOR” screen.
4. Touch “START”.

Date Monitor Item

Monitored item	Description
IGN ON SW	Indicates “IGN [ON] / ACC or OFF [OFF]” condition of ignition switch signal.
INT SW	Indicates “ INT position [ON] / Others [OFF]” condition of front wiper switch signal.
WASH SW	Indicates “WASH position [ON] / Others [OFF]” condition of front wiper switch signal.
VHCL SPEED SE	Indicates “Vehicle is moving [RUN] / Vehicle stopped [STOP]” condition of vehicle speed signal.
WIPR AUTO STP	Indicates “INT or OFF position [IGN] / LO or HI position [OFF]” condition of front wiper switch signal.
INTRESIST	Indicates “ Intermittent resistance value [approx. 0 to 1]” condition front wiper switch signal.

ACTIVE TEST

Operation Procedure

1. Touch “WIPER” on “SELECT TEST ITEM” screen.
2. Touch “ACTIVE TEST” on “SELECT DIAG MODE” screen.
3. Touch the item to be tested, and check the operation.

Test item “WIPER AMP”	Front wiper motor operation
“ON”	Operate
“OFF”	Stop

4. During the operation check, touching “OFF” deactivates the operation.

On Board Diagnosis

EKS00EXZ

- IVMS can check communication diagnosis, switch monitor, and central locking system self diagnosis using on board diagnosis.
- Map lamps and step lamps (all seats) act as the indicators for on board diagnosis.

DIAGNOSIS ITEM FOR FRONT WIPER AND WASHER SYSTEM

Diagnosis item	Description
Switch monitor	It can check wiper and washer switch.

SWITCH MONITOR

How to Perform Switch Monitor

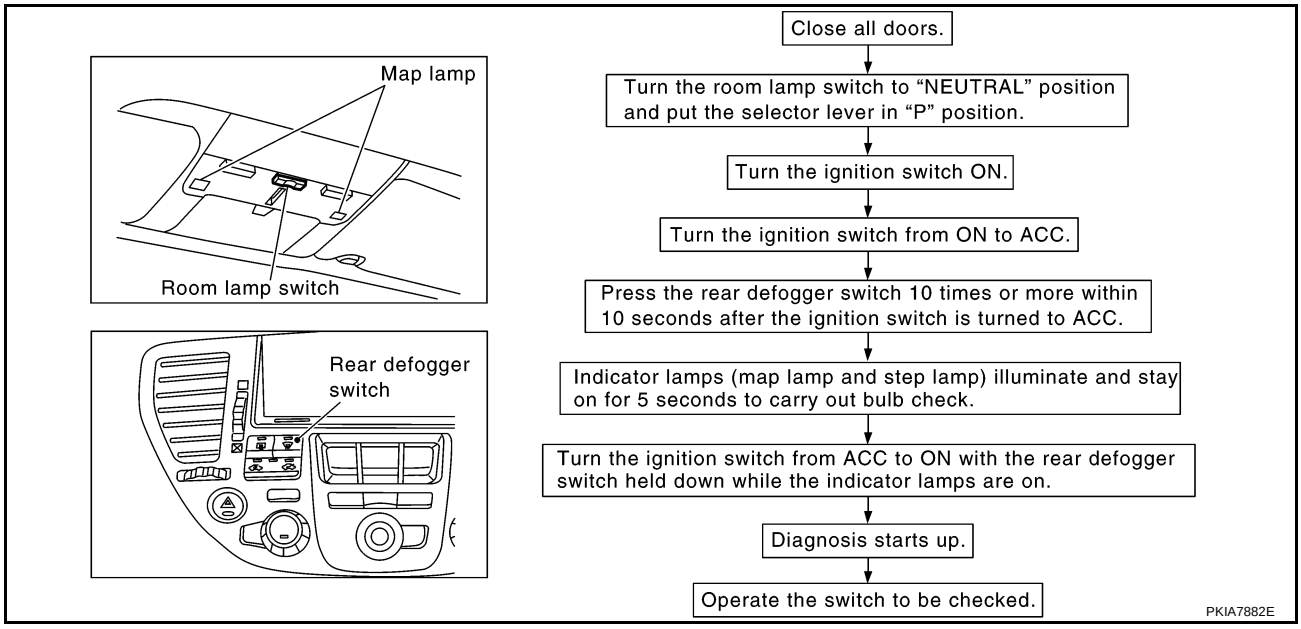

Diagnosis Result Display

- Detects the status change (switch ON/OFF operation) of switch to be checked, and turns on/off indicator lamps (the map lamp and step lamp). Also sounds the buzzer for 0.5 seconds.
- If a malfunction is detected, no indicator lamp and buzzer react.

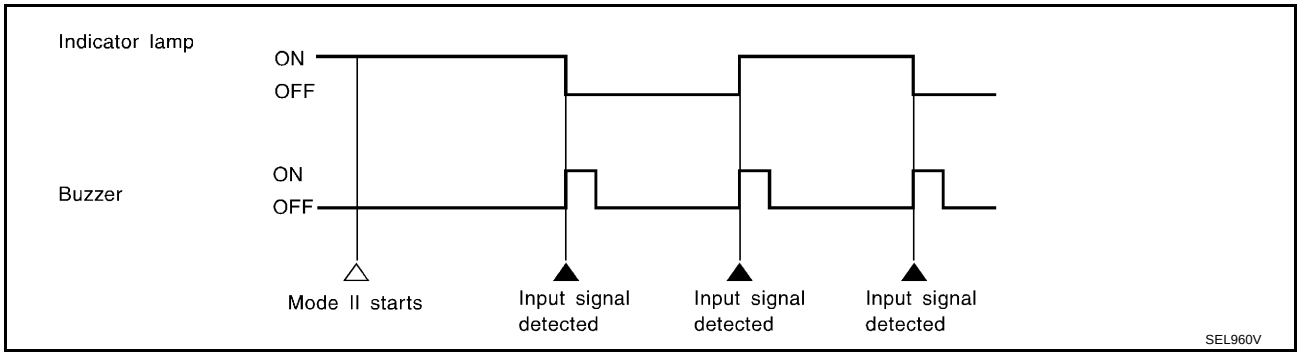

Cancel of Switch Monitor

- Ignition switch is turned OFF.
- Drive the vehicle at more than 7 km/h (4MPH).

Intermittent Wiper Does Not Operate

EKS00EY0

1. CHECK INTERMITTENT FRONT WIPER SWITCH INPUT SIGNAL

With CONSULT-II
See “INT SW” in “DATA MONITOR” mode.

When front wiper switch is in INT position : INT SW ON

When front wiper switch is in OFF position : INT SW OFF

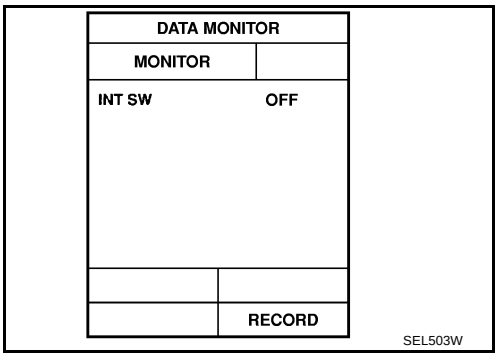

NOTE:
When “Data monitor” is operating, intermittent wiper does not operate.

Without CONSULT-II
Check front wiper switch (INT) in switch monitor mode. Refer to WW-14, "SWITCH MONITOR" .

OK or NG

OK >> GO TO 2.
NG >> Check the following.
- Front wiper switch
- Harness for open or short between BCM and front wiper switch
- Front wiper switch ground circuit

2. CHECK WIPER AUTO STOP SIGNAL

With CONSULT-II
See “WIPR AUTO STP” in “DATA MONITOR” mode, and turn front wiper switch to LO or HI position.

When front wiper switch is in INT or OFF position : WIPER AUTO STP IGN

When front wiper switch is in LO or HI : WIPER AUTO STP GND

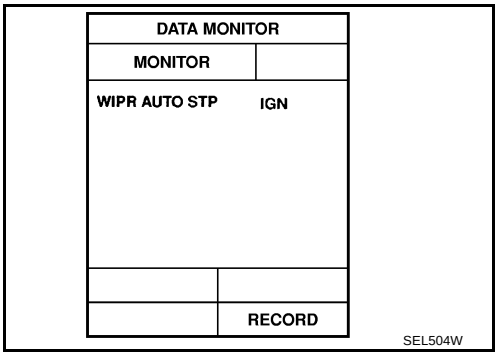

Without CONSULT-II
1. Turn ignition switch ON.
2. Turn front wiper switch to LO or HI position.
3. Check voltage between BCM harness connector terminal and ground.

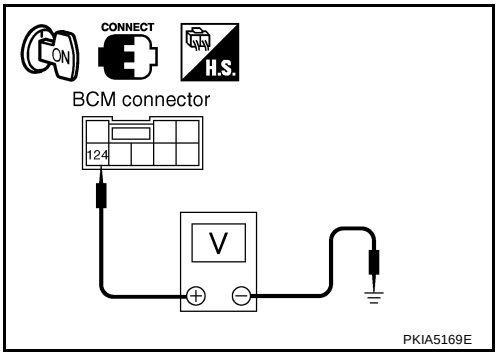

Terminals			Condition	Voltage
BCM (+)		(–)		
Connector	Terminal (Wire color)			
E204	124 (SB)	Ground	Moving	Approx. 0V
			Stopped	Battery voltage

OK or NG

OK >> GO TO 3.
NG >> Check the following.
- Front wiper motor
- Front wiper motor ground circuit
- Harness for open or short between BCM and front wiper motor

3. CHECK IGNITION SWITCH ON SIGNAL

With CONSULT-II
See “IGN ON SW” in “DATA MONITOR” mode.

When ignition switch is ON : IGN ON SW ON
When ignition switch is ACC or OFF : IGN ON SW OFF

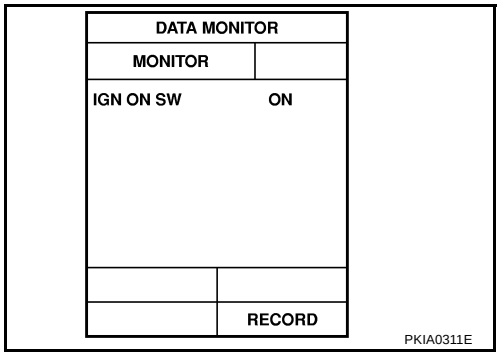

Without CONSULT-II
Check voltage between BCM harness connector M4 terminal 68 (W/B) and ground.

Ignition switch is ON : Battery voltage should exist.
Ignition switch is ACC or OFF : Approx. 0V

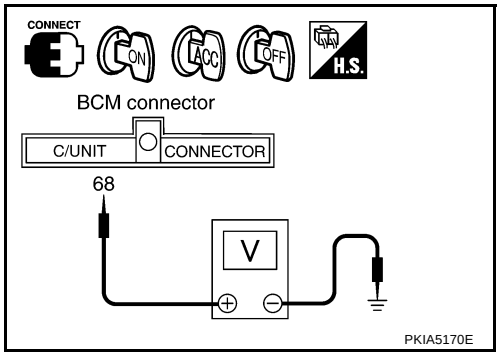

OK or NG

OK >> GO TO 4.
NG >> Check the following.
- 10A fuse [No. 1, located in fuse block (J/B) No. 1]
- Harness for open or short between fuse and BCM

4. CHECK WIPER OPERATION

With CONSULT-II
See “WIPER AMP” in “ACTIVE TEST” mode. Perform operation shown on display.

Front wiper motor should operate.

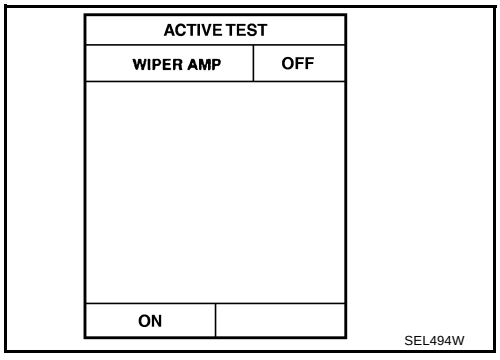

NOTE:
If CONSULT-II is not available, skip this procedure and go to WW-19, "Wiper and Washer Activate Individually but Intermittent Wiper and Washer Combination Does Not Operate" .

OK or NG

OK >> Replace BCM.
NG >> Go to WW-19, "Wiper and Washer Activate Individually but Intermittent Wiper and Washer Combination Does Not Operate" .

Intermittent Time of Wiper Cannot be Adjusted

EKS00EY1

1. CHECK INTERMITTENT WIPER VOLUME INPUT SIGNAL

With CONSULT-II

See “INT RESIST” in “DATA MONITOR” mode while turning intermittent wiper volume.

Short interval : Approx. 0 kohm

Long interval : Approx. 1 kohm

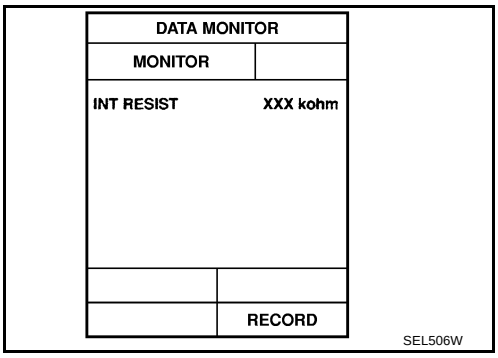

Without CONSULT-II

1. Turn ignition switch OFF.
2. Disconnect the BCM connector.
3. Measure resistance between BCM harness connector M4 terminal 48 (G/OR) and ground while turning intermittent wiper volume.

Short interval : Approx. 0 KΩ

Long interval : Approx. 1 KΩ

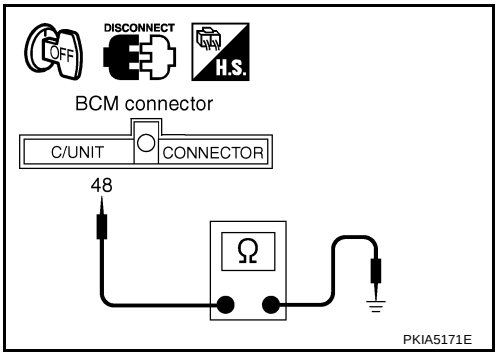

OK or NG

OK >> Replace BCM.

NG >> GO TO 2.

2. CHECK FRONT WIPER SWITCH

Check front wiper switch. Refer to WW-23, "Wiper and Washer Switch Circuit Check" .

OK or NG

OK >> Check the following.

- Harness for open or short between BCM and intermittent wiper volume
- Front wiper switch ground circuit

NG >> Replace front wiper switch.

Wiper and Washer Activate Individually but Not In Combination

EKS00EY2

1. CHECK WASHER SWITCH INPUT SIGNAL

With CONSULT-II

See “WASH SW” in “DATA MONITOR” mode.

When front washer switch is ON : WASH SW ON

When front washer switch is OFF : WASH SW OFF

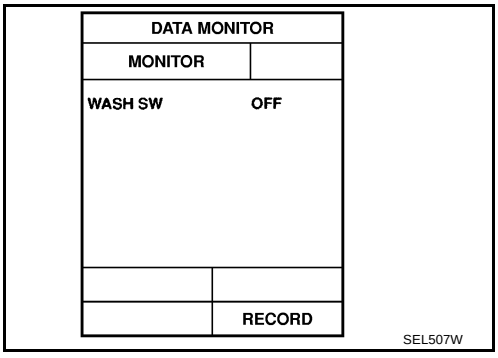

Without CONSULT-II

Check front wiper switch (WASH) in switch monitor mode. Refer to WW-14, "SWITCH MONITOR" .

OK or NG

OK >> Replace BCM.

NG >> Check harness for open or short between BCM and front wiper switch.

Intermittent Wiper Operates, but There Is No Change In Intermittent Time Between When Vehicle Is Stopped and Moving

EKS00EY3

1. CHECK THE SYMPTOM

Check that speedometer in combination meter operates normally.

OK or NG

OK >> GO TO 2.
NG >> Check the vehicle speed signal. Refer to DI-15, "Diagnosis Flow" in DI section.

2. FUNCTIONAL INSPECTION

With CONSULT-II
With "VHCL SPEED SE" on DATA MONITOR, check the vehicle speed signal. Refer to WW-13, "DATA MONITOR" .

Monitor item [OPERATION or UNIT]	Contents
VHCL SPEED SE "<7km/>7km"	The present vehicle speed (less than 7 km/h (4 MPH), or 7 km/h (4 MPH) or higher) is displayed.

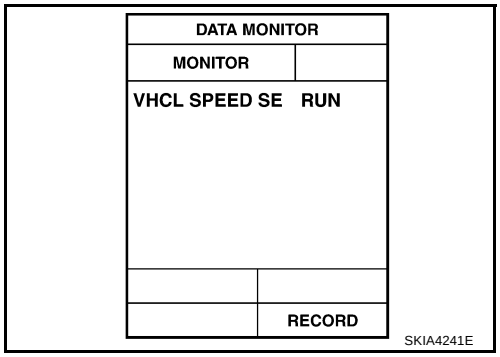

Without CONSULT-II
GO TO 3.

OK or NG

OK >> System is OK.
NG >> GO TO 3.

3. VEHICLE SPEED INPUT/OUTPUT INSPECTION

Start the engine, and check voltage between BCM harness connector M4 terminal 49 (PU/W) and ground, using an oscilloscope.

Voltage waveform
[When vehicle speed is approx. 40km/h (25MPH)]

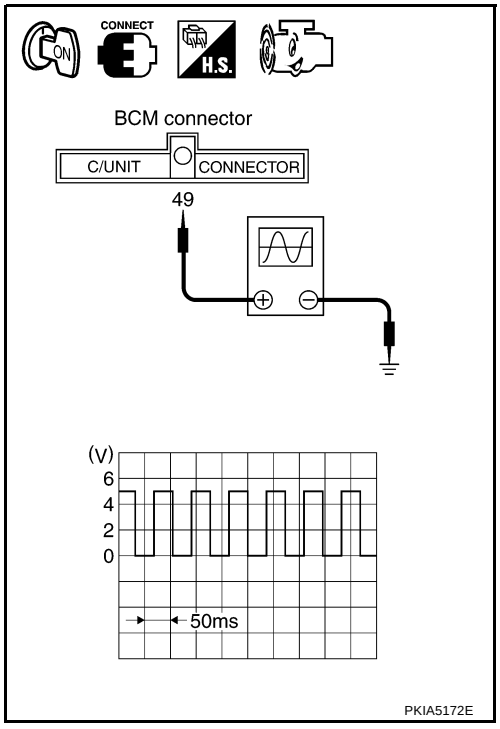

OK or NG

OK >> Replace BCM.
NG >> GO TO 4.

4. HARNESS CONTINUITY INSPECTION

1. Turn ignition switch OFF.
2. Disconnect BCM connectors and combination meter connector.
3. Check continuity between BCM harness connector M4 terminal 49 (PU/W) and combination meter harness connector M41 terminal 18 (PU/W).

   49 (PU/W) - 18 (PU/W) : Continuity should exist.

4. Check continuity between BCM harness connector M4 terminal 49 (PU/W) and ground.

   49 (PU/W) - Ground : Continuity should not exist.

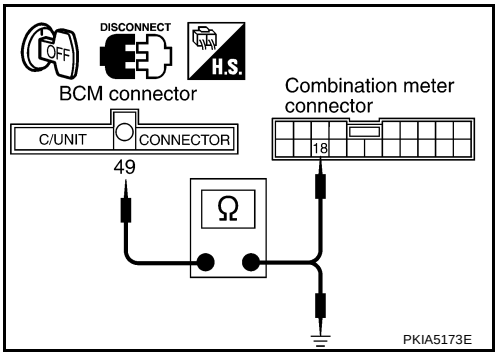

OK or NG

OK >> Replace combination meter.
NG >> Repair harness or connector.

Wiper and Washer Activate Individually but Intermittent Wiper and Washer Combination Does Not Operate

EKS00EY4

1. CHECK POWER SUPPLY CIRCUIT FOR FRONT WIPER RELAY

1. Turn ignition switch OFF.
2. Remove front wiper relay.
3. Turn ignition switch ON.
4. Check voltage between front wiper relay harness connector E4 terminal 1 (LG) and ground.

   1 (LG) - Ground : Battery voltage should exist.

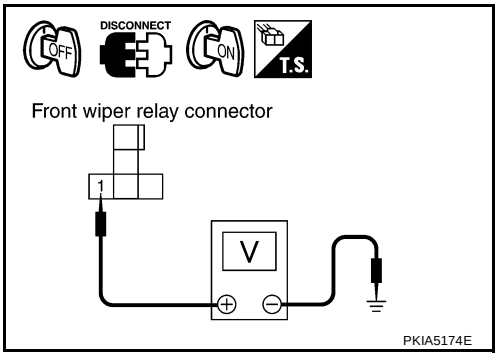

OK or NG

OK >> GO TO 2.
NG >> Check the following.
- 20A fuse [No. 34, located in fuse block (J/B) No.2]
- Harness for open or short between front wiper relay and fuse

2. CHECK GROUND CIRCUIT FOR FRONT WIPER RELAY

1. Turn ignition switch OFF.
2. Check continuity between front wiper relay harness connector E4 terminal 5 (B) and ground.

   5 (B) - Ground : Continuity should exist.

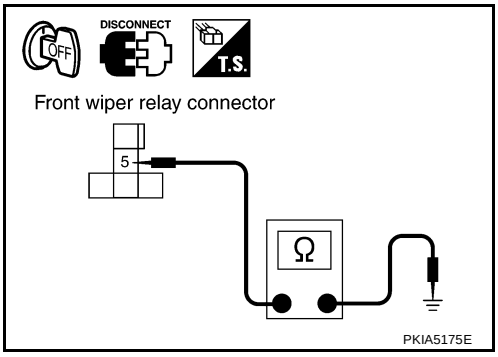

OK or NG

OK >> GO TO 3.
NG >> Repair harness ground circuit.

3. CHECK FRONT WIPER RELAY

Apply battery voltage to between front wiper relay terminal 1 and 2 and check continuity between terminal 3 and 5.

3 - 5 : Continuity should exist.

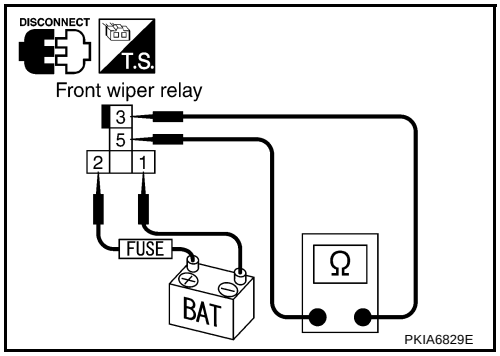

OK or NG

OK >> GO TO 4.
NG >> Replace the front wiper relay.

4. CHECK BCM OUTPUT SIGNAL

1. Connect front wiper relay.
2. Turn ignition switch ON.
3. Check voltage between BCM harness connector E204 terminal 128 (R/Y) and ground.

Wash : Approx. 0V (for 0.7sec.)
OFF : Battery voltage should exist.

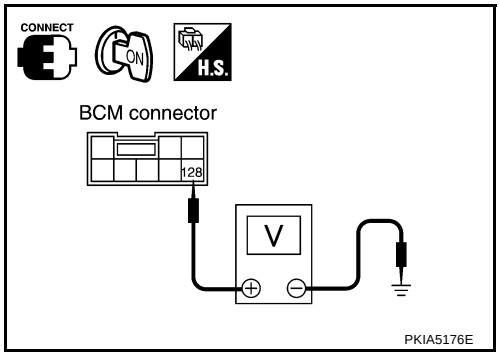

OK or NG

OK >> Repair harness between front wiper relay and BCM.
NG >> Replace the BCM.

Removal and Installation of Front Wiper Arms, Adjustment of Front Wiper Arms Stop Location

EKS00EY5

1. Prior to wiper arm installation, turn on front wiper switch to operate front wiper motor and then turn it “OFF” (Auto stop).
2. Lift the blade up and then set it down onto glass surface to set the blade center to clearance “L1” and “L2” immediately before tightening nut.
3. Eject washer fluid. Turn on front wiper switch to operate front wiper motor and then turn it “OFF”.
4. Ensure that wiper blades stop within clearance “L1” and “L2”.

Clearance “L1” : 32.5 - 47.5 mm (1.280 - 1.870 in)
Clearance “L2” : 24.5 - 39.5 mm (0.965 - 1.555 in)

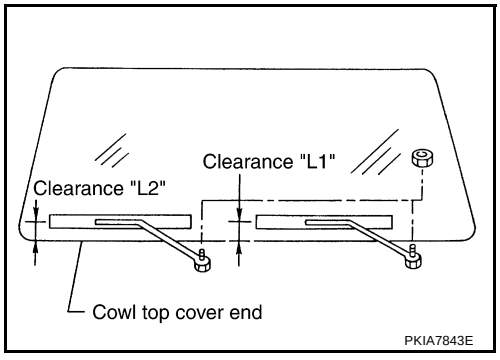

- Tighten wiper arm nuts to specified torque.

Front wiper arm mounting nuts : 23.6 N-m (2.4 kg-m, 17 ft-lb)

- Before reinstalling wiper arm, clean up the pivot area as illustrated. This will reduce possibility of wiper arm looseness.

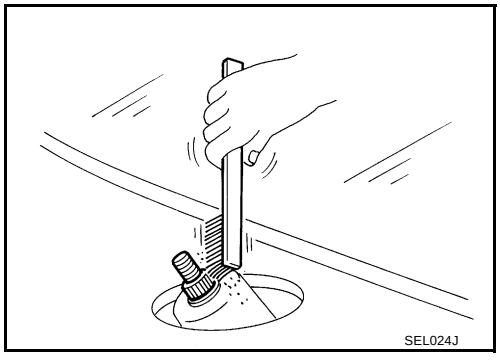

Removal and Installation of Front Wiper Motor and Linkage

EKS00EY6

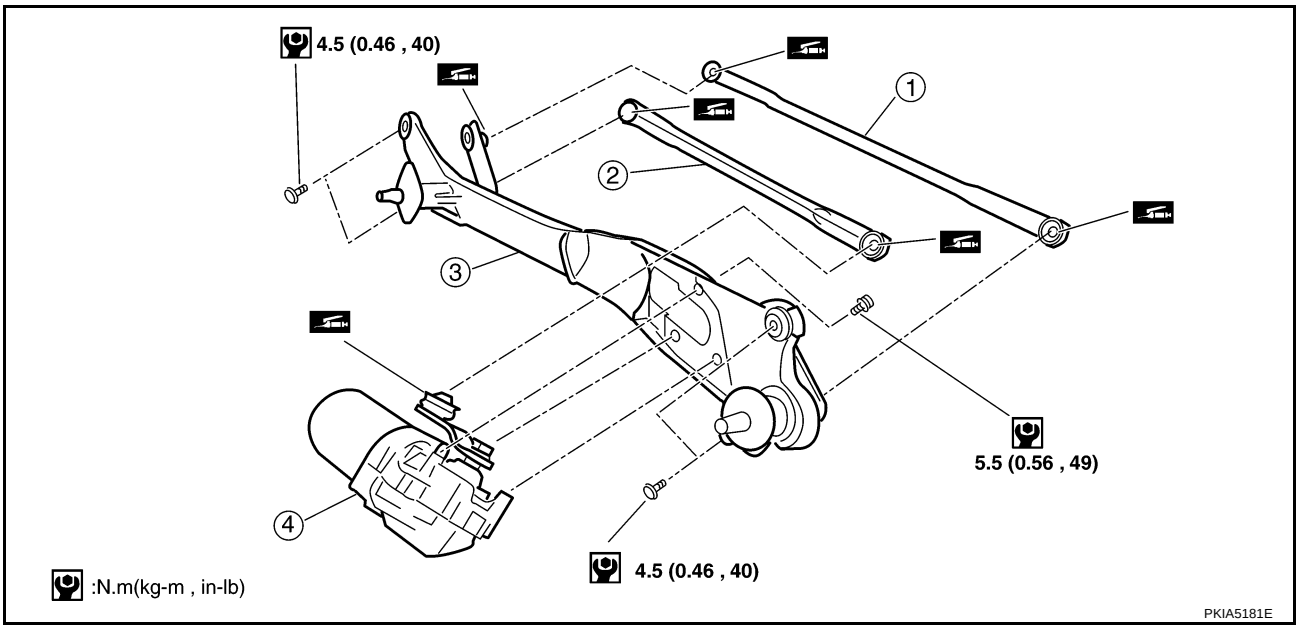

1. Wiper link
2. Wiper link
3. Wiper frame
4. Front wiper motor

REMOVAL

1. Operate front wiper motor, and stop it at the auto stop position.
2. Remove wiper arm from the vehicle.
3. Remove cowl top cover. Refer to EI-20, "COWL TOP" .
4. Disconnect front wiper motor connector.
5. Remove bracket and front wiper motor assembly.
6. Remove wiper link from wiper frame.
7. Remove front wiper motor from wiper frame.

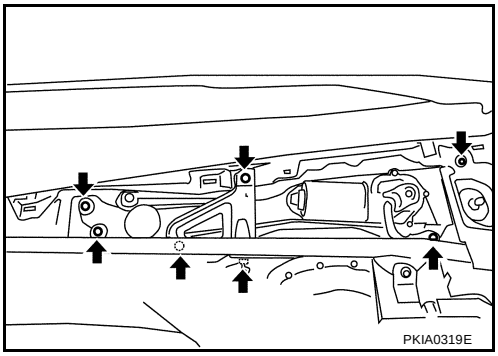

INSTALLATION

1. Connect front wiper motor to connector. Turn front wiper switch ON to operate front wiper motor, and then turn front wiper switch OFF (auto stop).
2. Disconnect front wiper motor connector.
3. Install front wiper motor to wiper frame.
4. Install wiper link to wiper frame and motor arm.
5. Install front wiper motor assembly to the vehicle.
6. Connect front wiper motor connector. Turn front wiper switch ON to operate front wiper motor, and then turn front wiper switch OFF (auto stop).
7. Install bracket to the vehicle.
8. Install cowl top cover. Refer to EI-20, "COWL TOP" .
9. Install wiper arm.

CAUTION:

- **Do not drop front wiper motor or cause it to contact other parts.**

- **Check the grease conditions of motor arm and wiper link joint (at retainer). Apply grease if necessary.**

Washer Nozzle Adjustment

EKS00GCF

- Adjust washer nozzle with suitable tool as shown in the figure at left.

Adjustable range : ±10°

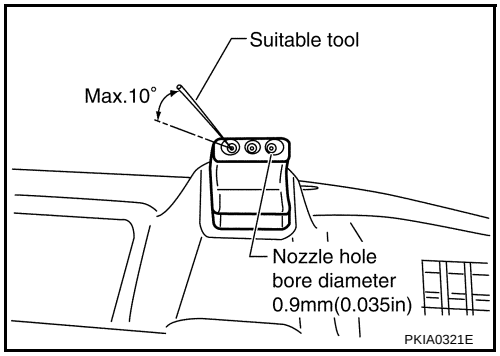

Unit: mm (in)

Spray position	H (height)	L (length)	h (spray point area)
1	192.7 (7.59)	420.4 (16.55)	165.3 (6.51)
2	226.9 (8.93)	293.8 (11.57)	172.3 (6.78)
3	204.9 (8.07)	69.3 (2.73)	133.8 (5.27)
4	120.6 (4.75)	174.8 (6.88)	164.5 (6.48)
5	246.8 (9.72)	299.2 (11.78)	179.2 (7.06)
6	140.5 (5.53)	458 (18.03)	190.6 (7.50)

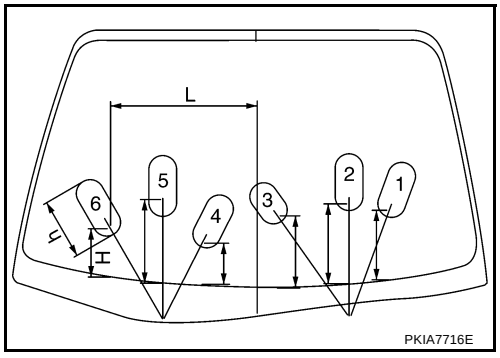

Washer Tube Layout

EKS00EY8

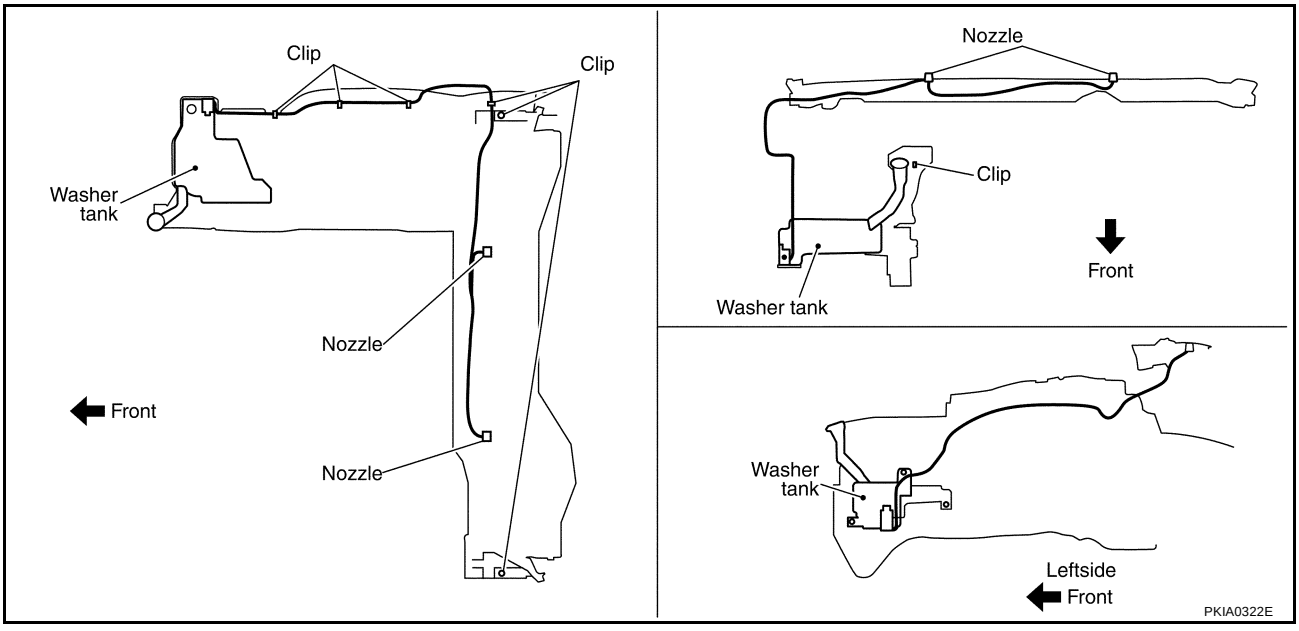

Removal and Installation of Washer Nozzle

EKS00EY9

REMOVAL

1. Push washer nozzle firmly toward either left or right to pull out.
2. Remove washer hose from washer nozzle.

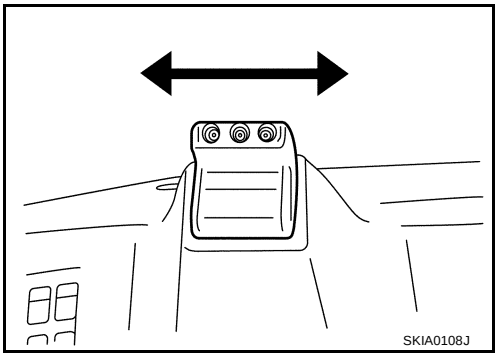

INSTALLATION

1. After connecting washer hose, press nozzle from cowl top cover surface.
2. Assemble nozzle and socket.
3. Adjust nozzle injection position.

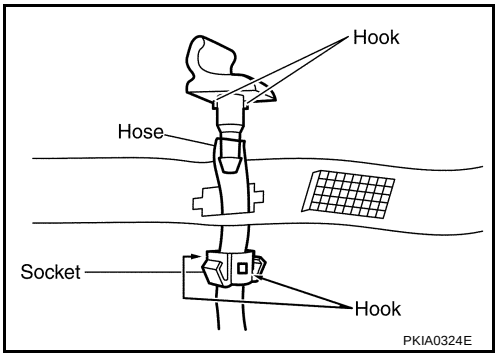

Inspection of Washer Nozzle

EKS00EYA

INSPECTION OF CHECK VALVE

Blow air in the injection direction, and check that air flows only one way. Make sure that the reverse direction (inhale) is not possible.

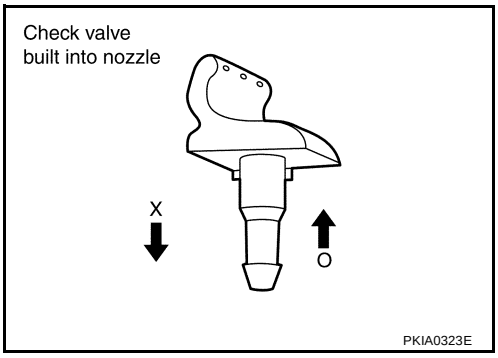

Wiper and Washer Switch Circuit Check

EKS00EYB

INSPECTION OF SWITCH CIRCUIT

Check continuity between each terminal when wiper and washer switch is operating using a circuit tester.

Operation interval (intermittent wiper with vehicle speed detection function)	Resistance value (kΩ)
1 [Interval (Max.)]	Approx. 1
2	Approx. 0.6
3	Approx. 0.3
4 [Interval (Min.)]	Approx. 0

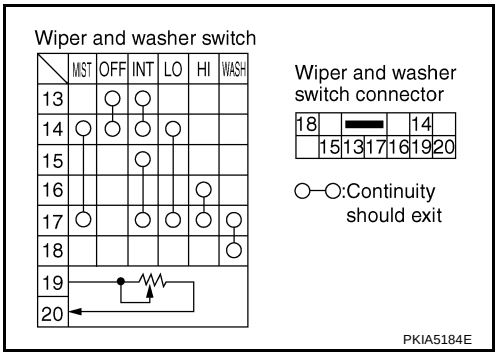

Removal and Installation of Front Wiper and Washer Switch

EKS00GCG

REMOVAL

1. Remove steering column cover. Refer to IP-10, "Removal and Installation" in IP section.
2. Remove front wiper and washer switch connector.

3. Remove screw and then remove wiper and washer switch from the base.

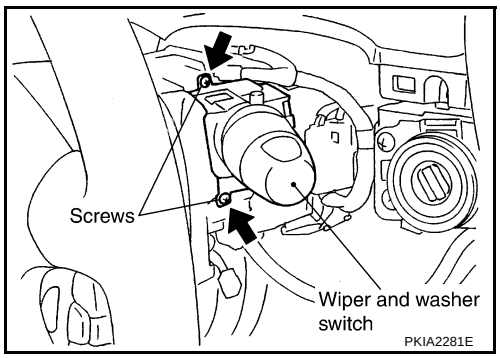

INSTALLATION

Installation is in the reverse order of removal.

Removal and Installation of Washer Tank

EKS00EYD

REMOVAL

1. Pull out washer tank inlet.

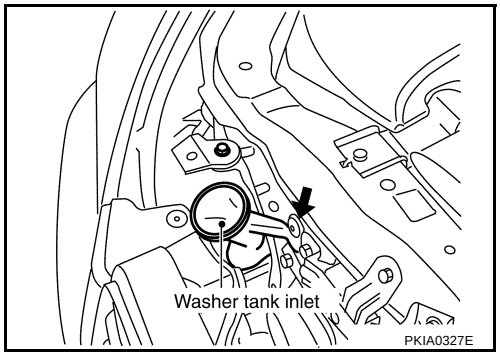

2. Remove fender protector, refer to EI-21, "FENDER PROTECTOR" .
3. Remove washer motor connector.
4. Remove washer tank installation screw and pawl.
5. Remove washer hose, and remove washer tank from the vehicle.

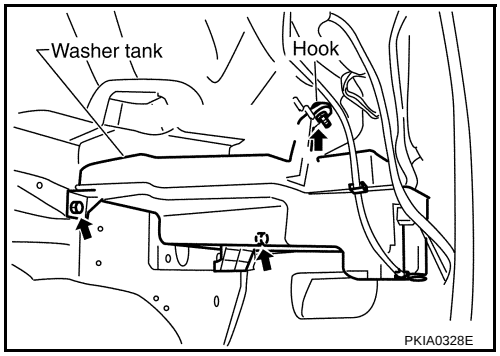

INSTALLATION

Tighten washer tank screw to specified torque.

Washer tank screw : 4.5 N-m (0.46 kg-m, 40 in-lb)

CAUTION:

After installation, add water up to the upper level of washer tank inlet, and check for water leaks.

Removal and Installation for Washer Motor

EKS00EYE

REMOVAL

1. Remove fender protector. Refer to EI-21, "FENDER PROTECTOR" .
2. Remove washer motor connector and hose.
3. Pull out washer motor in the direction of the arrow in the figure, and remove washer motor from washer tank.

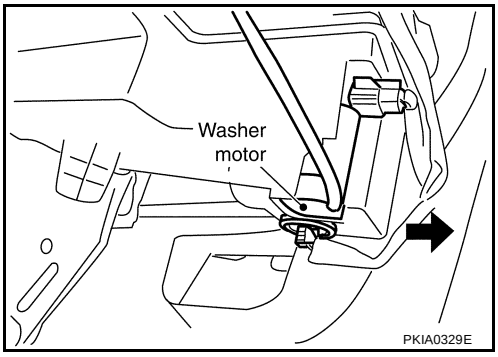

INSTALLATION

Installation is in the reverse order of removal.

CAUTION:

When installing washer motor, there should be no packing twists, etc.

CIGARETTE LIGHTER

PFP:35330

Wiring Diagram — CIGAR —

EKS001JG

WW-CIGAR-01

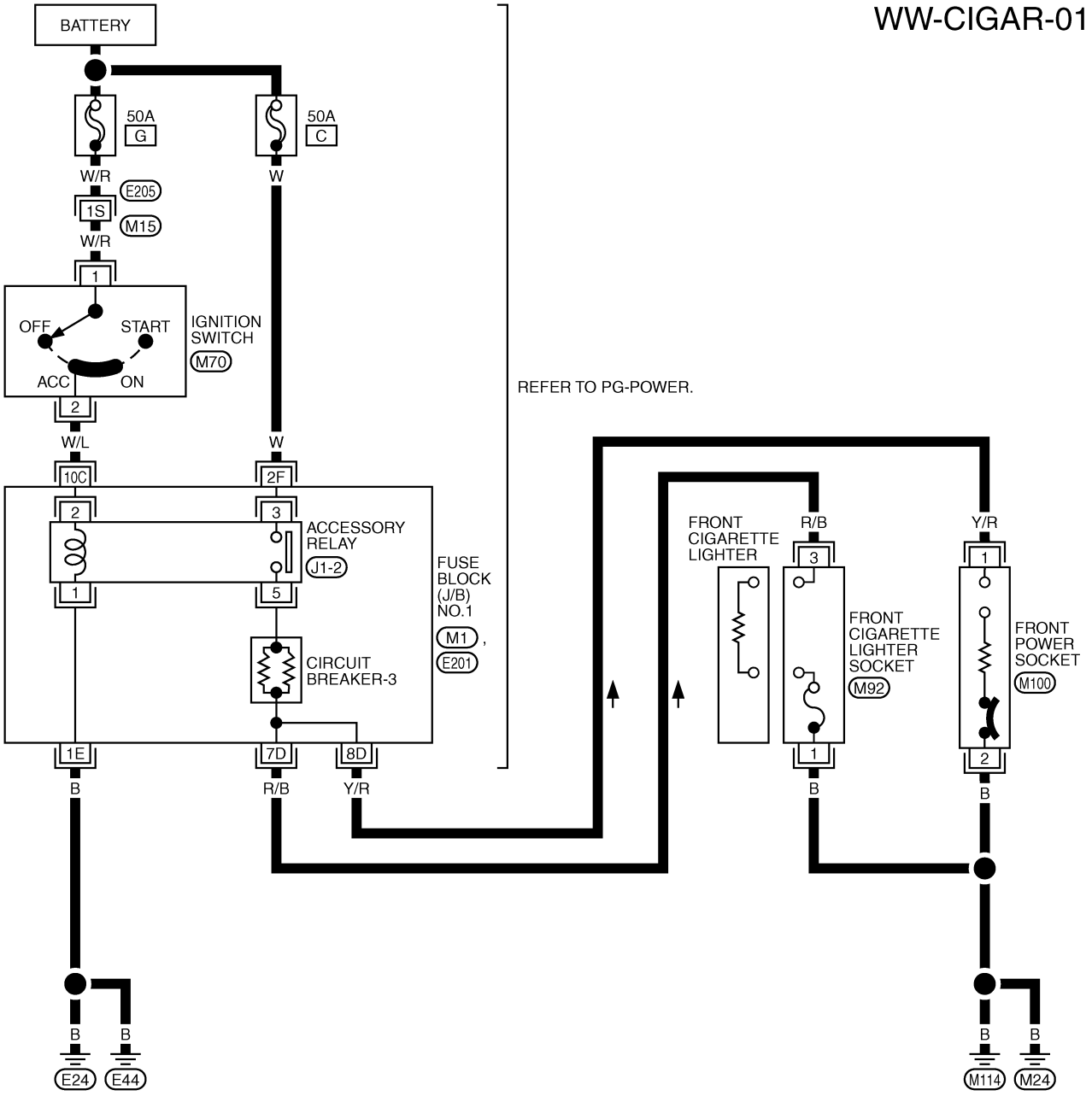

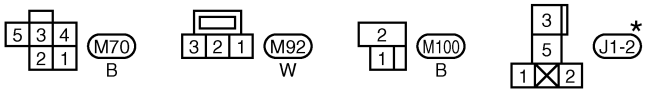

REFER TO THE FOLLOWING.

E205 -SUPER MULTIPLE JUNCTION (SMJ)

M1 , E201 -FUSE BLOCK-JUNCTION BOX (J/B) NO.1

*: THIS CONNECTOR IS NOT SHOWN IN "HARNESS LAYOUT", PG SECTION.

TKWM0433E

Removal and Installation

EKS001JH

REMOVAL

1. Remove A/T console finisher. Refer to IP-11, "WORK STEPS" in IP section.
2. Pull out the cigarette lighter.
3. Remove socket.
4. Press out ring from the back of ashtray.

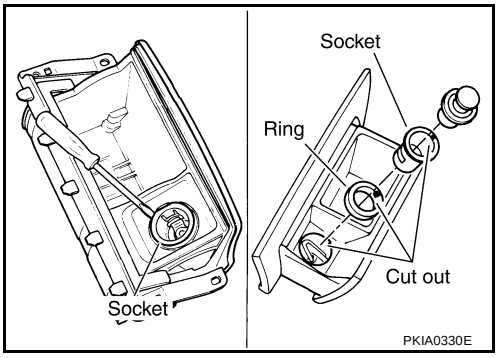

INSTALLATION

Installation is in the reverse order of removal.

POWER SOCKET

PFP:253A2

Wiring Diagram — CIGAR —

EKS001JI

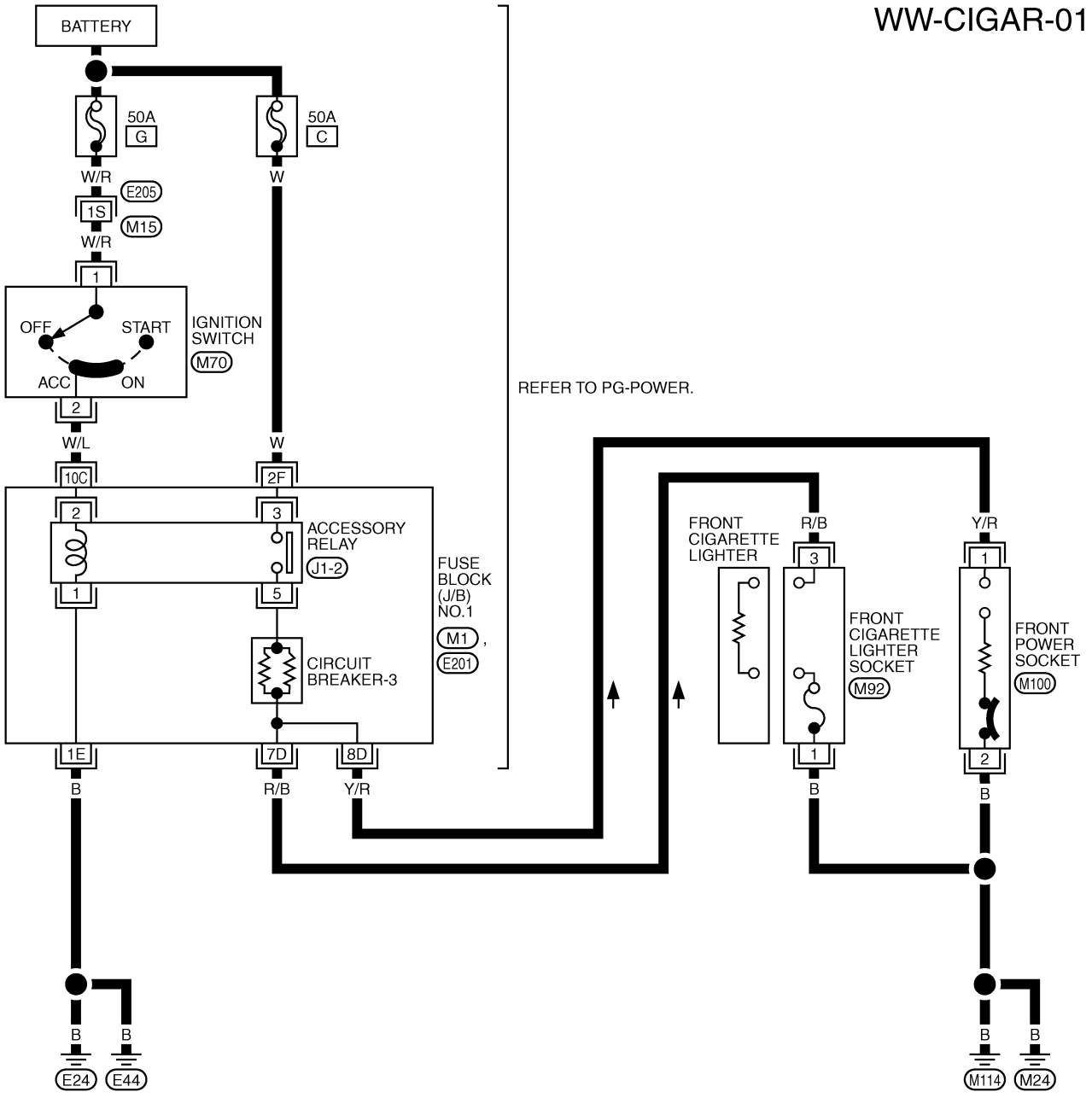

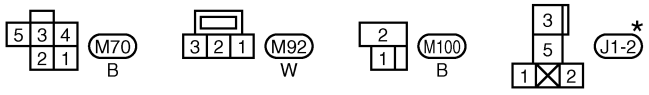

REFER TO THE FOLLOWING.

E205 -SUPER MULTIPLE JUNCTION (SMJ)

M1 , E201 -FUSE BLOCK-JUNCTION BOX (J/B) NO.1

*: THIS CONNECTOR IS NOT SHOWN IN "HARNESS LAYOUT", PG SECTION.

TKWM0433E

Removal and Installation

EKS00145

REMOVAL

1. Remove console box assembly. Refer to IP-11, "WORK STEPS" in IP section.
2. Disconnect power socket connector.
3. Remove inner socket and socket from console finisher while pressing hook on inner socket.
4. Remove socket from inner socket while pressing hook.

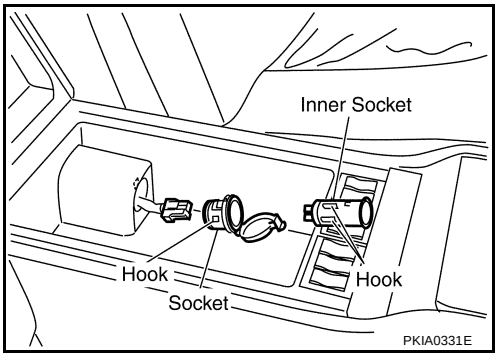

INSTALLATION

Installation is in the reverse order of removal.

HORN

PFP:25610

Wiring Diagram — HORN —

EKS001JK

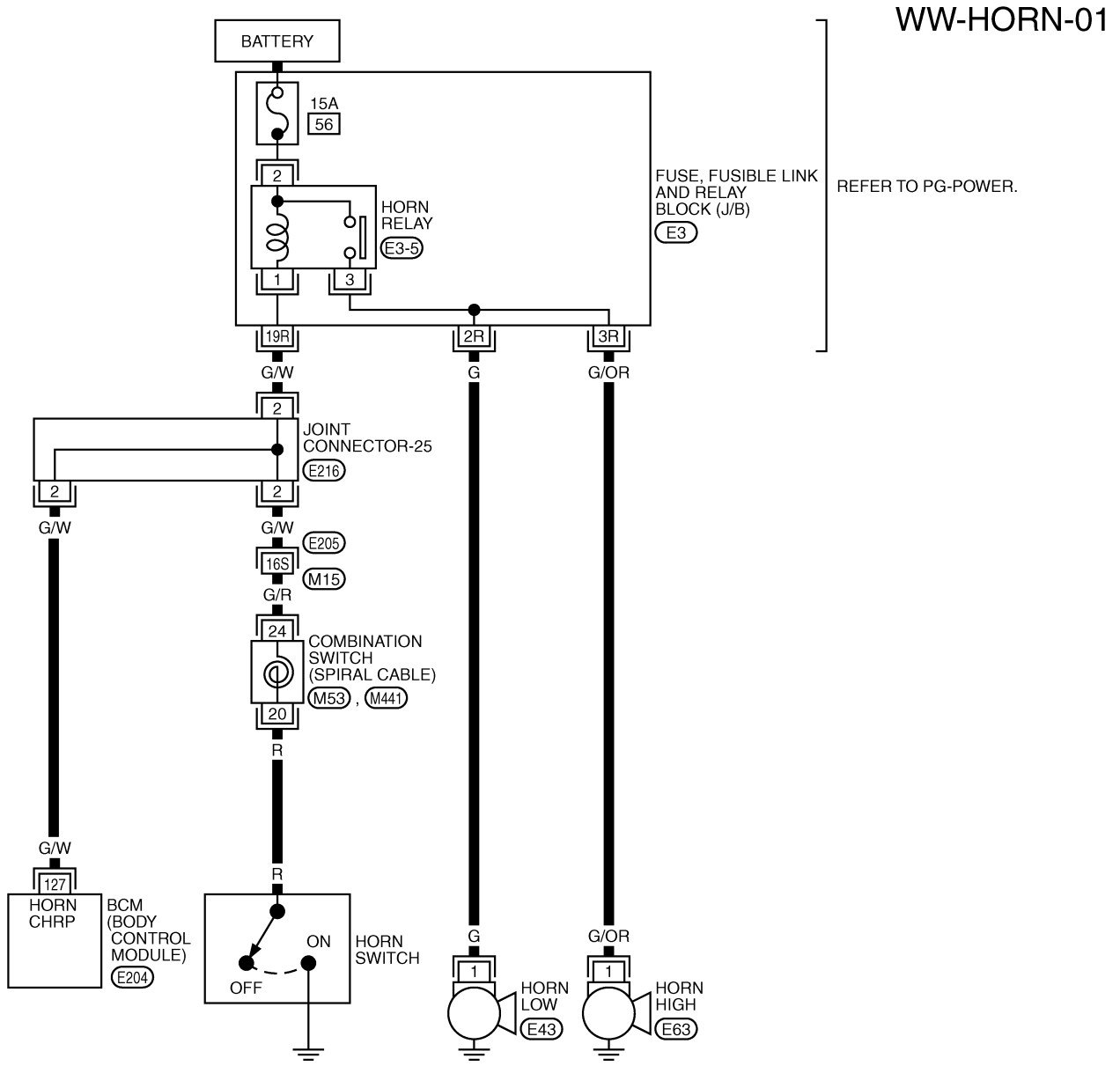

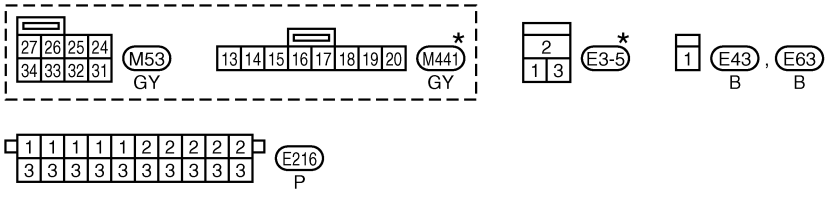

REFER TO THE FOLLOWING.

E205 -SUPER MULTIPLE JUNCTION (SMJ)

E3 -FUSE,FUSIBLE LINK AND RELAY BLOCK (J/B)

E204 -ELECTRICAL UNITS

*: THIS CONNECTOR IS NOT SHOWN IN "HARNESS LAYOUT", PG SECTION.

TKWM0109E

Removal and installation

EKS001JL

REMOVAL (HORN HI)

1. Remove mass air flow sensor cover. Refer to EM-11, "ENGINE ROOM COVER" .
2. Disconnect horn connector.
3. Remove horn.

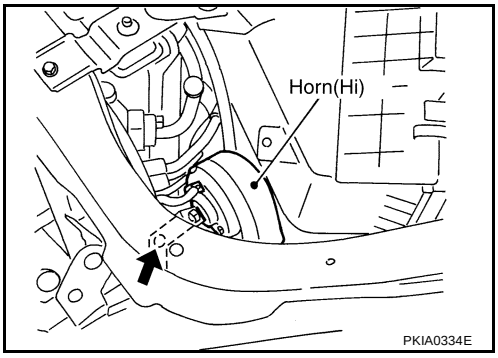

INSTALLATION (HORN HI)

Tighten horn bolt to specified torque.

Horn bolt **: 6.8 N·m (0.69 kg-m, 60 in-lb)**

REMOVAL (HORN LOW)

1. Remove front grille. Refer to EI-19, "FRONT GRILLE" .
2. Disconnect horn connector.
3. Remove horn.

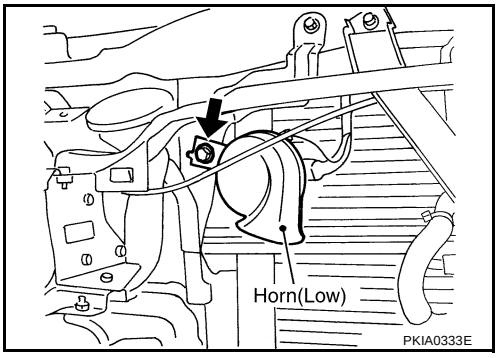

INSTALLATION (HORN LOW)

Tighten horn bolt to specified torque.

Horn bolt **: 17.1 N·m (1.7 kg-m, 13 ft-lb)**