SECTION MA

CONTENTS

Supplemental Restraint System (SRS) "AIR BAG"

The Supplemental Restraint System "AIR BAG", used along with a seat belt, helps to reduce the risk or severity of injury to the driver and front passenger in a frontal collision. The Supplemental Restraint System consists of air bag modules (located in the center of the steering wheel and in the instrument panel on the passenger side), a diagnosis sensor unit, warning lamp, wiring harness and spiral cable. Information necessary to service the system safely is included in the **RS section** of this Service Manual.

WARNING:

- **To avoid rendering the SRS inoperative, which could increase the risk of personal injury or death in the event of a collision which would result in air bag inflation, all maintenance should be performed by an authorized NISSAN dealer.**
- **Improper maintenance, including incorrect removal and installation of the SRS, can lead to personal injury caused by unintentional activation of the system.**
- **Do not use electrical test equipment on any circuit related to the SRS unless instructed to in this Service Manual. SRS wiring harnesses are covered with yellow insulation just before the harness connectors for easy identification.**

Special Service Tool

The actual shapes of Kent-Moore tools may differ from those of special service tools illustrated here.

Tool number (Kent-Moore No.) Tool name	Description
KV10105900 (J34274) Oil filter cap wrench	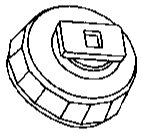 NT005 Removing oil filter

Commercial Service Tool

Tool number (Kent-Moore No.)	Description
Belt tension guage (BT 3373-F	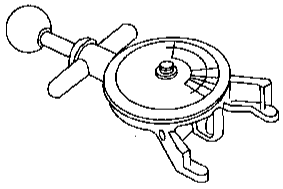 AMA126 Checking drive belt tension

General maintenance includes those items which should be checked during normal day-to-day operation of the vehicle. They are essential if the vehicle is to continue operating properly. The owners can perform checks and inspections themselves or have their NISSAN dealers do them.

Item	Reference page
OUTSIDE THE VEHICLE The maintenance items listed here should be performed from time to time, unless otherwise specified.	
Tires Check the pressure with a gauge periodically when at a service station, including the spare, and adjust to the specified pressure if necessary. Check carefully for damage, cuts and excessive wear.	—
Wheel nuts When checking the tires, make sure no nuts are missing, and check for any loose nuts. Tighten if necessary.	—
Tire rotation Tires should be rotated every 12,000 km (7,500 miles.)	MA-21
Wheel alignment and balance If the vehicle pulls to either side while driving on a straight and level road, or if you detect uneven or abnormal tire wear, there may be a need for wheel alignment. If the steering wheel or seat vibrates at normal highway speeds, wheel balancing may be needed.	MA-21, FA-7
Windshield wiper blades Check for cracks and wear if they do not wipe properly.	—
Doors and engine hood Check that all doors and the engine hood as well as the trunk lid or back hatch operate smoothly. Also, make sure that all latches lock securely. Lubricate if necessary. Make sure that the secondary latch keeps the hood from opening when the primary latch is released. When driving in areas using road salt or other corrosive materials, check lubrication frequently.	MA-22
INSIDE THE VEHICLE The maintenance items listed here should be checked on a regular basis, such as when performing periodic maintenance, cleaning the vehicle, etc.	
Lamps Make sure that the headlamps, stop lamps, tail lamps, turn signal lamps, and other lamps are all operating properly and installed securely. Also, check headlamp aim.	—
Warning lamps and buzzers/chimes Make sure that all warning lamps and buzzers/chimes are operating properly.	—
Windshield wiper and washer Check that the wipers and washer operate properly and that the wipers do not streak.	—
Windshield defroster Check that air comes out of the defroster outlets properly and in good quantity when operating the heater or air conditioner.	—
Steering wheel Check that it has the specified play. Be sure to check for changes in the steering condition, such as excessive play, hard steering or strange noises. **Free play: Less than 35 mm (1.38 in)**	ST-8
Seats Check seat position controls such as seat adjusters, seatback recliner, etc. to make sure they operate smoothly and that all latches lock securely in every position. Check that the head restraints move up and down smoothly and that the locks (if equipped) hold securely in all latched positions. Check that the latches lock securely for folding-down rear seatbacks.	—
Seat belts Check that all parts of the seat belt system (e.g., buckles, anchors, adjusters and retractors) operate properly and smoothly and are installed securely. Check the belt webbing for cuts, fraying, wear and damage.	MA-22
Accelerator pedal Check the pedal for smooth operation and make sure the pedal does not catch or require uneven effort. Keep the floor mats away from the pedal.	—
Clutch pedal Make sure the pedal operates smoothly and check that it has the proper free play.	CL-5
Brakes Check that the brakes do not pull the vehicle to one side when applied.	—
Brake pedal and booster Check the pedal for smooth operation and make sure it has the proper distance under it when depressed fully. Check the brake booster function. Be sure to keep the floor mats away from the pedal.	BR-13, 16

Item	Reference page
Parking brake Check that the lever has the proper travel and make sure that the vehicle is held securely on a fairly steep hill when only the parking brake is applied.	BR-36
Automatic transaxle "Park" mechanism Check that the lock release button on the selector lever operates properly and smoothly. On a fairly steep hill check that the vehicle is held securely with the selector lever in the "P" position without applying brakes.	—
UNDER THE HOOD AND VEHICLE The maintenance items listed here should be checked periodically (e.g., each time you check the engine oil or refuel).	
Windshield washer fluid Check that there is adequate fluid in the tank.	—
Engine coolant level Check the coolant level when the engine is cold.	MA-11
Radiator and hoses Check the front of the radiator and clean off any dirt, insects, leaves, etc., that may have accumulated. Make sure the hoses have no cracks, deformation, deterioration or loose connections.	LC-9
Brake and clutch fluid levels Make sure that the brake and clutch fluid levels are between the "MAX" and "MIN" lines on the reservoirs.	MA-17, 19
Battery Check the fluid level in each cell. It should be between the "MAX" and "MIN" lines.	EL-19
Engine drive belts Make sure that no belt is frayed, worn, cracked or oily.	MA-10
Engine oil level Check the level on the dipstick after parking the vehicle on a level surface and turning off the engine.	MA-14
Power steering fluid level and lines Check the level on the dipstick with the engine off. Check the lines for improper attachment, leaks, cracks, etc.	MA-21
Automatic transmission fluid level Check the level on the dipstick after putting the selector lever in "P" with the engine idling.	MA-18
Exhaust system Make sure there are no loose supports, cracks or holes. If the sound of the exhaust seems unusual or there is a smell of exhaust fumes, immediately locate the trouble and correct it.	MA-17
Underbody The underbody is frequently exposed to corrosive substances such as those used on icy roads or to control dust. It is very important to remove these substances, otherwise rust will form on the floor pan, frame, fuel lines and around the exhaust system. At the end of winter, the underbody should be thoroughly flushed with plain water, being careful to clean those areas where mud and dirt can easily accumulate.	—
Fluid leaks Check under the vehicle for fuel, oil, water and other fluid leaks after the vehicle has been parked for a while. Water dripping from the air conditioner system after use is normal. If any leaks or gasoline fumes are evident, check for the cause and correct it immediately.	—

Two different maintenance schedules are provided, and should be used, depending upon the conditions in which the vehicle is mainly operated. **After 60,000 miles (96,000 km) or 48 months, continue the periodic maintenance at the same mileage/time intervals.**

SCHEDULE 1

Follow Periodic Maintenance Schedule 1 if the driving habits frequently include one or more of the following driving conditions:

- Repeated short trips of less than 5 miles (8 km).
- Repeated short trips of less than 10 miles (16 km) with outside temperatures remaining below freezing.
- Operating in hot weather in stop-and-go rush hour traffic.
- Extensive idling and/or low speed driving for long distances, such as police, taxi or door-to-door delivery use.
- Driving in dusty conditions.
- Driving on rough, muddy, or salt spread roads.
- Towing a trailer, using a camper or a car-top carrier.

SCHEDULE 2

Follow Periodic Maintenance Schedule 2 if none of the driving conditions shown in Schedule 1 apply to the driving habits.

Schedule 1

Abbreviations: R = Replace. I = Inspect. Correct or replace if necessary.

[ ]: At the mileage intervals only

MAINTENANCE OPERATION Perform at number of miles, kilometers or months, whichever comes first.	Miles x 1,000 (km x 1,000) Months	MAINTENANCE INTERVAL 3.75 (6) 3	7.5 (12) 6	11.25 (18) 9	15 (24) 12	18.75 (30) 15	22.5 (36) 18	26.25 (42) 21	30 (48) 24	33.75 (54) 27	37.5 (60) 30	41.25 (66) 33	45 (72) 36	48.75 (78) 39	52.5 (84) 42	56.25 (90) 45	60 (96) 48	Reference page
Emission control system maintenance																		
Drive belts	See NOTE (1)																I*	MA-10
Air cleaner filter	See NOTE (2)								[R]								[R]	MA-13
EVAP vapor lines									I*								I*	MA-16
Fuel lines									I*								I*	MA-12
Fuel filter	See NOTE (3)*																	MA-13
Engine coolant	See NOTE (4)																R*	MA-11
Engine oil		R	R	R	R	R	R	R	R	R	R	R	R	R	R	R	R	MA-14
Engine oil filter		R	R	R	R	R	R	R	R	R	R	R	R	R	R	R	R	MA-14
Spark plugs (Use PLATINUM-TIPPED type)																	[R]	MA-15
Intake & exhaust valve clearance	See NOTE (5)*																	EM-37
Chassis and body maintenance																		
Brake lines & cables					I				I				I				I	MA-19
Brake pads, rotors, drums & linings			I		I		I		I		I		I		I		I	MA-19
Manual transmission oil & automatic transmission fluid	See NOTE (6)				I				I				I				I	MA-17, 18
Steering gear & linkage, axle & suspension parts			I		I		I		I		I		I		I		I	MA-21, FA-5, RA-4
Exhaust system			I		I		I		I		I		I		I		I	MA-17
Drive shaft boots			I		I		I		I		I		I		I		I	FA-17
Air bag system	See NOTE (7)																	RS-12

NOTE:
(1) After 60,000 miles (96,000 km) or 48 months, inspect every 15,000 miles (24,000 km) or 12 months.
(2) If operating mainly in dusty conditions, more frequent maintenance may be required.
(3) If vehicle is operated under extremely adverse weather conditions or in areas where ambient temperatures are either extremely low or extremely high, the filters might become clogged. In such an event, replace them immediately.
(4) After 60,000 miles (96,000 km) or 48 months, replace every 30,000 miles (48,000 km) or 24 months.
(5) If valve noise increases, inspect valve clearance.
(6) If towing a trailer, using a camper or a car-top carrier, or driving on rough or muddy roads, change (not just inspect) oil at every 30,000 miles (48,000 km) or 24 months.
(7) Inspect the air bag system 10 years after the date of manufacture noted on the FMVSS certification label.
*** Maintenance items and intervals with "*" are recommended by NISSAN for reliable vehicle operation. The owner need not perform such maintenance in order to maintain the emission warranty or manufacturer recall liability. Other maintenance items and intervals are required.**

Schedule 2

Abbreviations: R = Replace. I = Inspect. Correct or replace if necessary.

[ ]: At the mileage intervals only

MAINTENANCE OPERATION Perform at number of miles, kilometers or months, whichever comes first.	Miles x 1,000 (km x 1,000) Months	MAINTENANCE INTERVAL 7.5 (12) 6	15 (24) 12	22.5 (36) 18	30 (48) 24	37.5 (60) 30	45 (72) 36	52.5 (84) 42	60 (96) 48	Reference page
Emission control system maintenance										
Drive belts	See NOTE (1)								I*	MA-10
Air cleaner filter					[R]				[R]	MA-13
EVAP vapor lines					I*				I*	MA-16
Fuel lines					I*				I*	MA-12
Fuel filter	See NOTE (2)*									MA-13
Engine coolant	See NOTE (3)								R*	MA-11
Engine oil		R	R	R	R	R	R	R	R	MA-14
Engine oil filter		R	R	R	R	R	R	R	R	MA-14
Spark plugs (Use PLATINUM-TIPPED type)									[R]	MA-15
Intake & exhaust valve clearance	See NOTE (4)*									EM-37
Chassis and body maintenance										
Brake lines & cables			I		I		I		I	MA-19
Brake pads, rotors, drums & linings			I		I		I		I	MA-19
Manual transmission gear oil & automatic transmission fluid			I		I		I		I	MA-17, 18
Steering gear & linkage, axle & suspension parts					I				I	MA-21, FA-5, RA-4
Exhaust system					I				I	MA-17
Drive shaft boots			I		I		I		I	FA-17
Air bag system	See NOTE (5)									RS-12

NOTE:
(1) After 60,000 miles (96,000 km) or 48 months, inspect every 15,000 miles (24,000 km) or 12 months.
(2) If vehicle is operated under extremely adverse weather conditions or in areas where ambient temperatures are either extremely low or extremely high, the filters might become clogged. In such an event, replace them immediately.
(3) After 60,000 miles (96,000 km) or 48 months, replace every 30,000 miles (48,000 km) or 24 months.
(4) If valve noise increases, inspect valve clearance.
(5) Inspect the air bag system 10 years after the date of manufacture noted on the FMVSS certification label.
*** Maintenance items and intervals with "*" are recommended by NISSAN for reliable vehicle operation. The owner need not perform such maintenance in order to maintain the emission warranty or manufacturer recall liability. Other maintenance items and intervals are required.**

Fluids and Lubricants

	Capacity (Approximate)			Recommended fluids and lubricants
	US measure	Imp measure	Liter	
Engine oil Drain and refill				
With oil filter change	3-5/8 qt	3 qt	3.4	● API Certification Mark*2 ● API grade SG/SH, Energy Conserving II or API grade SJ, Energy Conserving*2 ● ILSAC grade GF-II*2
Without oil filter change	3-3/8 qt	2-7/8 qt	3.2	
Dry engine (engine overhaul)	4 qt	3-3/8 qt	3.8	
Cooling system (Reservoir tank included)	7-3/4 qt	6-3/8 qt	7.3	50% Genuine Nissan Anti-freeze Coolant or equivalent 50% Demineralized water or distilled water
Manual transaxle gear oil	9-1/2 - 10-1/8 pt	7-7/8 - 8-1/2 pt	4.5 - 4.8	API GL-4, 80W - 90 SUPER MULTI
Automatic transaxle fluid	10 qt	8-1/4 qt	9.4	Nissan Matic 'D' (Continental U.S. and Alaska) or Genuine Nissan Automatic Transmission Fluid (Canada).*1
Power steering fluid	1 qt	3/4 qt	0.9	Type DEXRON™ III or equivalent
Brake & clutch fluid	—	—	—	Genuine Nissan Brake Fluid*3 or equivalent DOT 3 (US FMVSS No. 116)
Multi-purpose grease	—	—	—	NLGI No. 2 (Lithium soap base)

*1: Dexron™ III/Mercon™ or equivalent may also be used. Outside the continental United States and Alaska contact a NISSAN dealership for more information regarding suitable fluids, including recommended brand(s) of Dexron™ III/Mercon™ Automatic Transmission Fluid.
*2: For further details, see "SAE Viscosity Number".
*3: Available in mainland U.S.A. through your NISSAN dealer.

SAE Viscosity Number

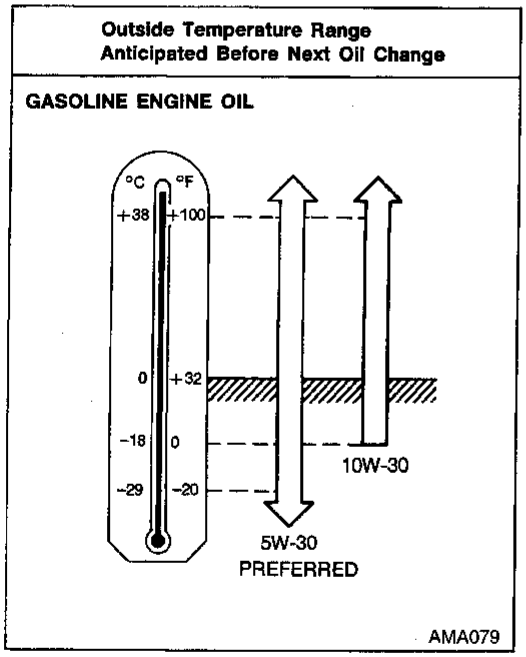

SAE 5W-30 viscosity oil is preferred for all temperatures. SAE 10W-30 viscosity oil may be used if the ambient temperature is above –18°C (0°F).

Antifreeze Coolant Mixture Ratio

The engine cooling system is filled at the factory with a high-quality, year-round, antifreeze coolant solution. The antifreeze solution contains rust and corrosion inhibitors. Therefore additional cooling system additives are not necessary.

CAUTION:

When adding or replacing coolant, be sure to use only an ethylene glycol antifreeze with the proper mixture ratio of 50% Genuine NISSAN Anti-freeze coolant or equivalent and 50% Demineralized water or distilled water.

Outside temperature down to		Genuine NISSAN Anti-freeze coolant or equivalent	Demineralized water or distilled water
°C	°F		
–35	–30	50%	50%

Other types of coolant solutions may damage the cooling system.

Checking Drive Belts

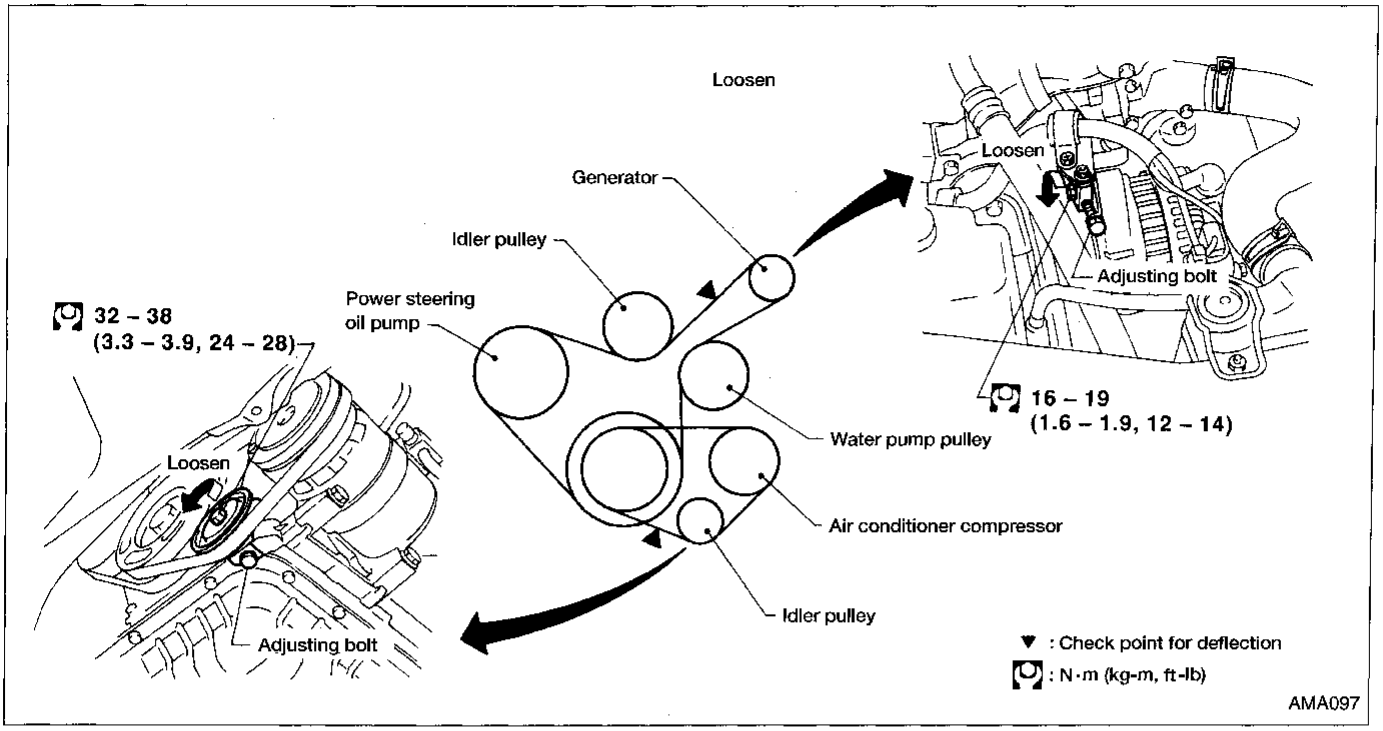

1. Inspect belts for cracks, fraying, wear and oil. If necessary, replace.
2. Inspect drive belt deflection or tension at a point on the belt midway between pulleys.

Check belt tension using belt tension gauge (BT3373-F or equivalent).

- **Inspect drive belt deflection or tension when engine is cold. Adjust if belt deflection exceeds the limit or if belt tension is not within specifications.**
- Drive belt tension can be checked at other points on the belt.

Belt deflection and tension

	Deflection adjustment		Unit: mm (in)	Tension adjustment *1		Unit: N (kg, lb)
	Used belt		New belt	Used belt		New belt
	Limit	After adjustment		Limit	After adjustment	
Generator & Power steering oil pump	8.5 (0.33)	6 - 6.5 (0.24 - 0.26)	5.5 - 6 (0.22 - 0.24)	379 (39, 85)	645 - 736 (66 - 75, 145 - 165)	755 - 843 (77 - 86, 170 - 190)
Air conditioner compressor	9.5 (0.39)	6.5 - 7 (0.26 - 0.28)	6 - 6.5 (0.24 - 0.26)	289 (30, 65)	556 - 645 (57 - 66, 125 - 145)	667 - 755 (68 - 77, 150 - 170)
Applied pushing force	98 N (10 kg, 22 lb)			—		

*1: If belt tension guage cannot be installed at check points shown, check drive belt tension at a different location on the belt.

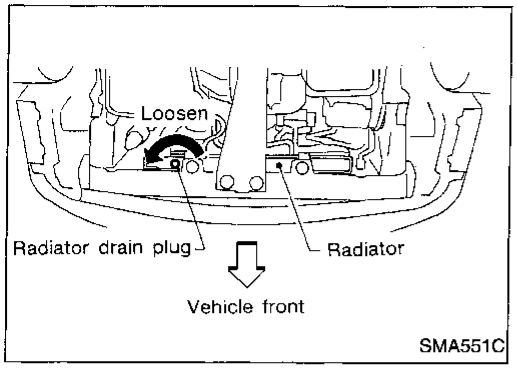

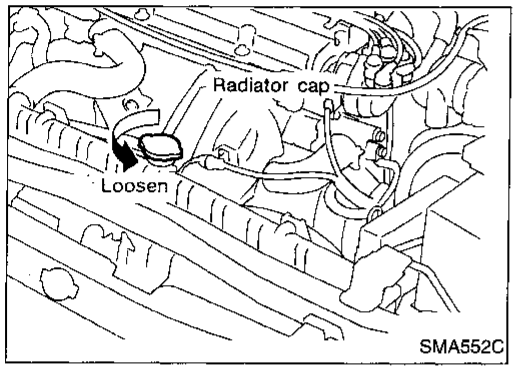

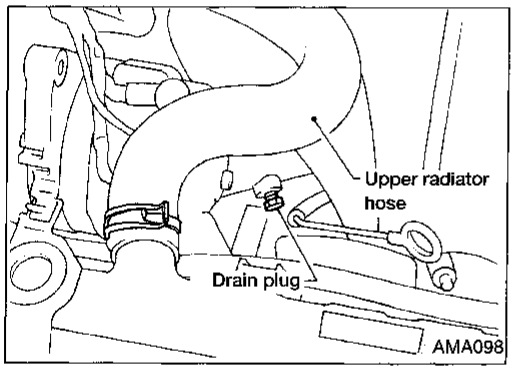

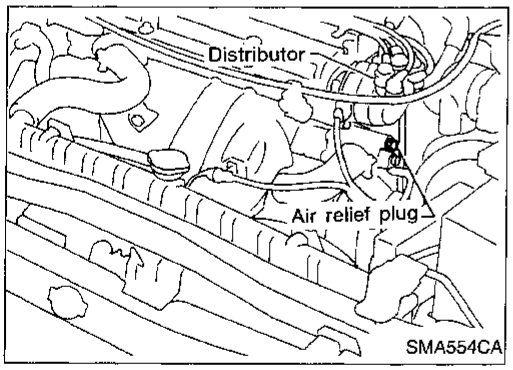

Changing Engine Coolant

WARNING:
To avoid being scalded, never change the coolant when the engine is hot.

—DRAINING ENGINE COOLANT—

1. Set air conditioner system as follows to prevent coolant from remaining in the system.
   a. Turn ignition switch ON and set temperature controller to maximum hot position.
   b. Wait 10 seconds before turning ignition switch OFF.
2. Open drain plug at the bottom of radiator and remove radiator cap.
3. Remove reservoir tank, drain coolant, then clean reservoir tank.
   Install it temporarily.
   - Be careful not to allow coolant to contact drive belts.
4. Remove drain plug on water pipe and air relief plug.
5. Check drained coolant for contaminants such as rust, corrosion, or discoloration. If contaminated, flush engine cooling system. Refer to "FLUSHING COOLING SYSTEM" shown below.

—REFILLING ENGINE COOLANT—

6. Install reservoir tank, radiator drain plug and drain plug on water pipe (or cylinder block drain plug if so equipped).
   - **Apply sealant to the thread of drain plug on water pipe.**
     : 34 - 44 N·m (3.5 - 4.5 kg-m, 25 - 33 ft-lb)
7. Fill radiator until coolant spills from the air relief hole, then install air relief plug.
   Air relief plug:
   : 7 - 8 N·m (0.7 - 0.8 kg-m, 61 - 69 in-lb)
   - Use Genuine Nissan Anti-freeze Coolant or equivalent mixed with distilled or demeneralized water.

Refer to "RECOMMENDED FLUIDS AND LUBRICANTS", MA-9.

Engine coolant capacity (With reservoir tank):
7.3 ℓ (7-3/4 US qt. 6-3/8 Imp qt)
Reservoir tank capacity:
0.7 ℓ (3/4 US qt, 5/8 Imp qt)

- **Pour coolant through coolant filler neck slowly to allow air in system to escape.**

Changing Engine Coolant (Cont'd)

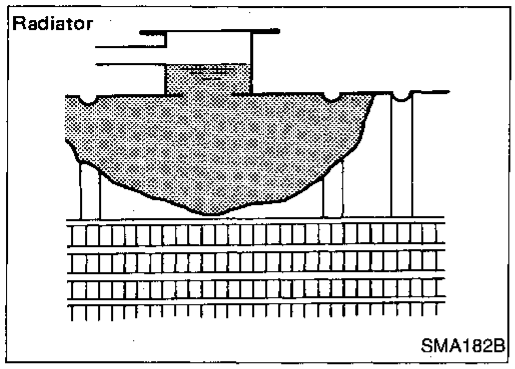

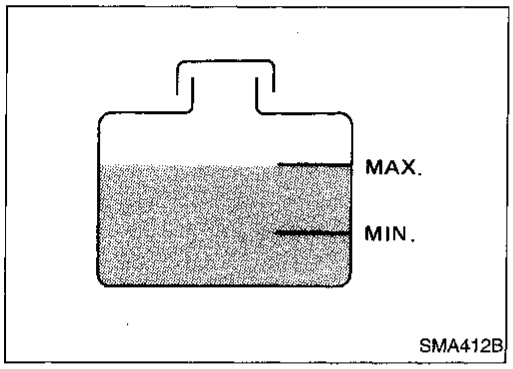

8. Fill radiator and reservoir tank to specified level.
9. Warm up engine to normal operating temperature without installing radiator cap.
10. Run engine at 2,500 rpm for 10 seconds and return to idle speed.
- Repeat two or three times.

Watch coolant temperature gauge so as not to overheat the engine.

11. Stop engine and cool it down.
    Cool down using a fan to reduce the time.
- If necessary, refill radiator up to filler neck.

12. Refill reservoir tank to MAX level line.
13. Repeat steps 9 through 12 two or more times with radiator cap installed until coolant level no longer drops.
14. Check cooling system for leaks with engine running.
15. Warm up engine, and check for sound of coolant flow while running engine from idle up to 3,000 rpm with heater temperature control lever set at several positions between COOL and WARM.
- Sound may be noticeable at heater water cock.

16. If sound is heard, bleed air from cooling system by repeating steps 9 through 12 until coolant level no longer drops.
- **Clean excess coolant from engine.**

—FLUSHING COOLING SYSTEM—

1. Open air relief plug.
2. Fill radiator with water until water spills from the air relief hole, then reinstall air relief plug. Fill radiator and reservoir tank with water and reinstall radiator cap.
3. Run engine and warm it up sufficiently.
4. Rev engine two or three times under no-load.
5. Stop engine and wait until it cools down.
6. Drain water.
7. Repeat steps 1 through 6 until clear water begins to drain from radiator.

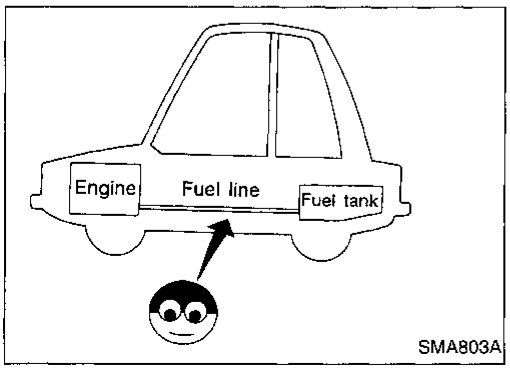

Checking Fuel Lines

Inspect fuel lines and tank for improper attachment, leaks, cracks, damage, chafing and deterioration.
If necessary, repair or replace.

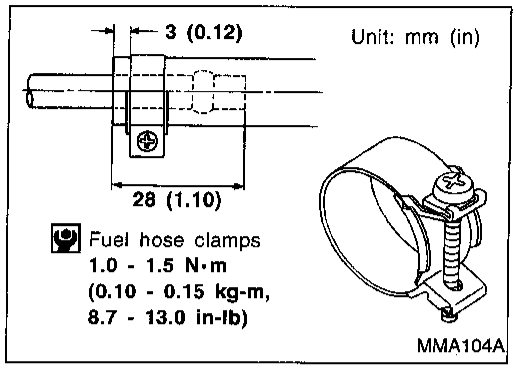

Changing Fuel Filter

CAUTION:

- **Tighten high-pressure rubber hose clamp so that clamp end is 3 mm (0.12 in) from hose end.**
- **Tightening torque specifications are the same for all rubber hose clamps.**
- **Ensure that screw does not contact adjacent parts.**

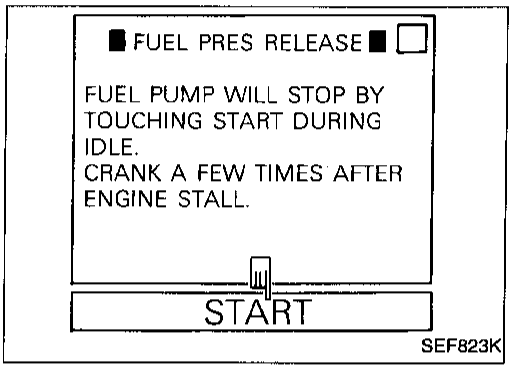

WARNING:
Before removing fuel filter, release fuel pressure from fuel line.

1. Release fuel pressure using the following procedure.
   a. Start engine.
   b. Perform "FUEL PRESSURE RELEASE" in "WORK SUPPORT" mode to release fuel pressure to zero.
   c. After engine stalls, crank engine two or three times to make sure that fuel pressure is released.
   d. Turn ignition switch OFF.

OR

   a. Remove fuse for fuel pump.
   b. Start engine.
   c. After engine stalls, crank engine two or three times to make sure that fuel pressure is released.
   d. Turn ignition switch OFF, and install fuse for fuel pump.

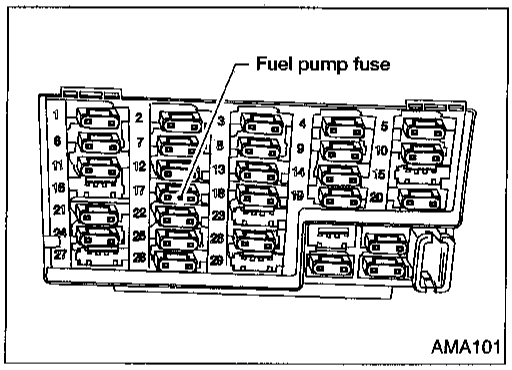

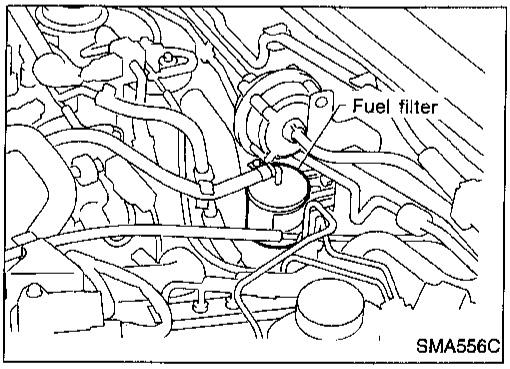

WARNING:
Use rubber gloves to prevent fuel from contacting the skin when removing fuel hoses and filter.

2. Loosen fuel hose clamps.
3. Replace fuel filter.

- **Be careful not to spill fuel over engine compartment. Place a shop towel to absorb fuel.**
- **Use a high-pressure type fuel filter. Do not use a synthetic resinous fuel filter.**

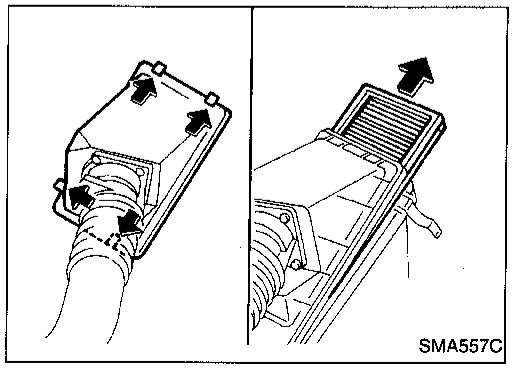

Changing Air Cleaner Filter

Unfasten clamps to change air cleaner filter.
The viscous paper type filter does not need cleaning.

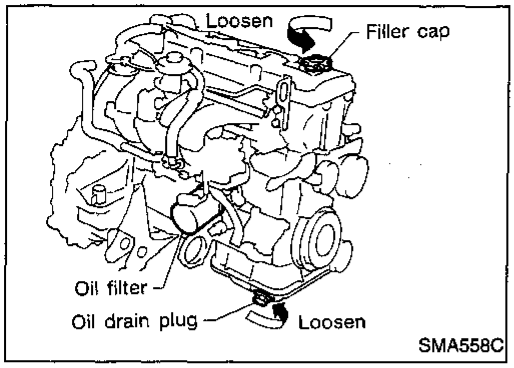

Changing Engine Oil

WARNING:

- **Be careful not to burn yourself, as the engine oil is hot.**
- **Prolonged and repeated contact with used engine oil may cause skin cancer; try to avoid direct skin contact with used oil. If skin contact is made, wash thoroughly with soap or hand cleaner as soon as possible.**

1. Warm up engine, and check for oil leakage from engine components.
2. Remove drain plug and oil filler cap and allow oil to drain.
3. Drain oil and refill with new engine oil.

Oil specification and viscosity:

- **API Certification Mark**
- **API grade SG/SH, Energy conserving II or API grade SJ, Energy conserving**
- **ILSAC grade GF-II**
- **Refer to "RECOMMENDED FLUIDS AND LUBRICANTS", MA-8.**

Refill oil capacity (Approximately):

Drain and refill	
without oil filter change	3.2 ℓ (3-3/8 US qt, 2-7/8 Imp qt)
with oil filter change	3.4 ℓ (3-5/8 US qt, 3 Imp qt)
Dry engine (engine overhaul)	3.8 ℓ (4 US qt, 3-3/8 Imp qt)

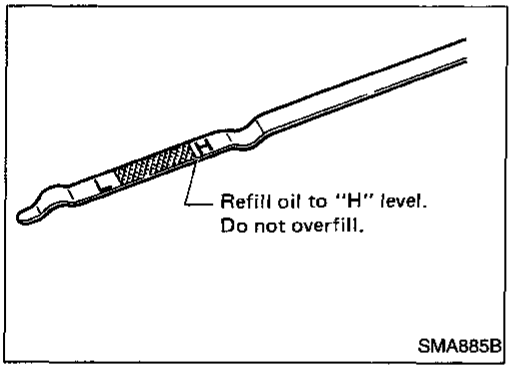

CAUTION:

- **Be sure to clean drain plug and install with new washer.**
  Drain plug:
  : 29 - 39 N·m (3.0 - 4.0 kg-m, 22 - 29 ft-lb)
- **The refill capacity depends on the oil temperature and drain time. Use these specifications for reference only. Always use the dipstick to determine when the proper amount of oil is in the engine.**

4. Check oil level.
5. Start engine and check area around drain plug and oil filter for oil leakage.
6. Run engine for a few minutes, then turn it off. After several minutes, check oil level.

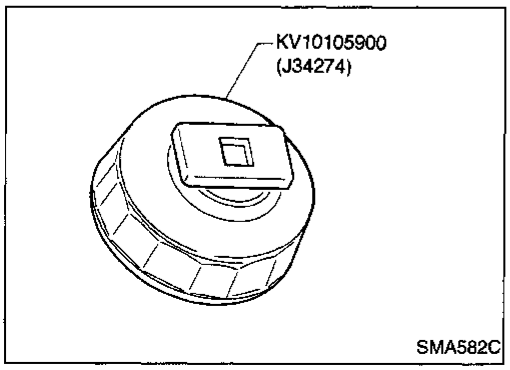

Changing Oil Filter

1. Remove oil filter with Tool.

WARNING:

Be careful not to burn yourself. Engine and engine oil are hot.

Changing Oil Filter (Cont'd)

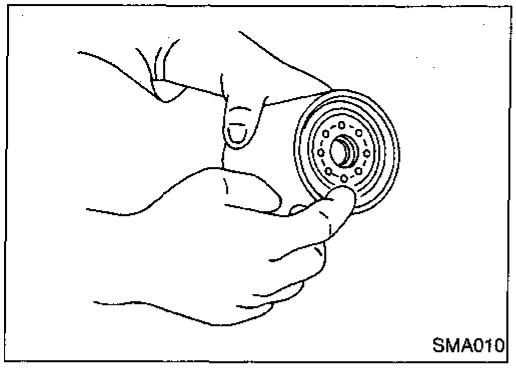

2. Clean oil filter mounting surface on cylinder block. Coat rubber seal of new oil filter with engine oil.

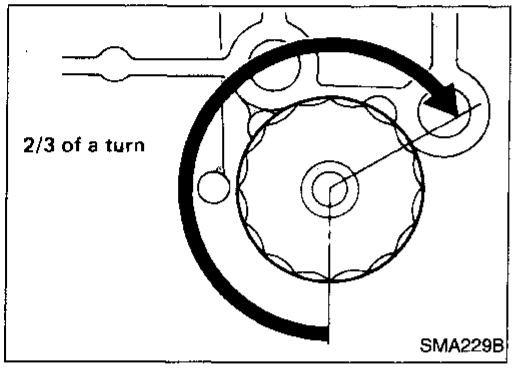

3. Screw in the oil filter until a slight resistance is felt, then tighten additionally more than 2/3 of a turn.
4. Add engine oil.

Refer to "Changing Engine Oil", MA-14.

- **Clean excess oil from engine block.**

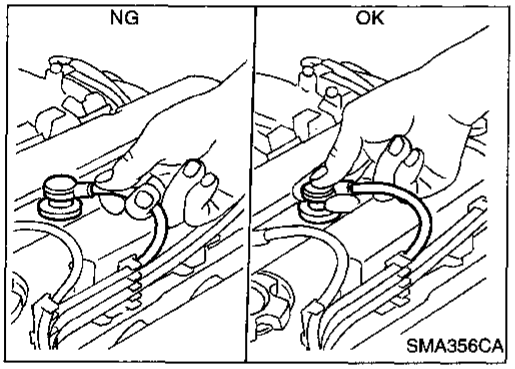

Changing Spark Plugs

1. Disconnect ignition wires from spark plugs at boot. Do not pull on the wire.

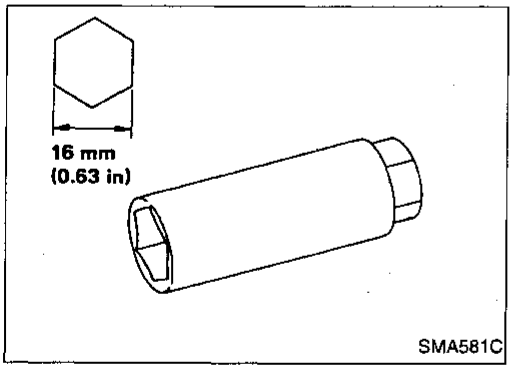

2. Remove spark plugs with spark plug socket.

Spark plug:

Make	NGK
Standard type	FR5AP-10
Alternative type	FR6AP-10
	FR7AP-10

Use standard type spark plug for normal condition.

The hot type spark plug is suitable when fouling occurs with the standard type spark plug under conditions such as:

- frequent engine starts
- low ambient temperatures

The cold type spark plug is suitable when spark knock occurs with the standard type spark plug under conditions such as:

- extended highway driving
- frequent high engine revolution

Changing Spark Plugs (Cont'd)

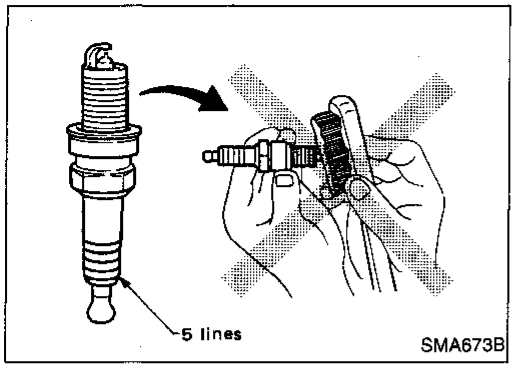

- **Do not use a wire brush for cleaning.**
- **If plug tip is covered with carbon, spark plug cleaner may be used.**
  Cleaner air pressure:
  Less than 588 kPa (6 kg/cm^2, 85 psi)
  Cleaning time:
  Less than 20 seconds

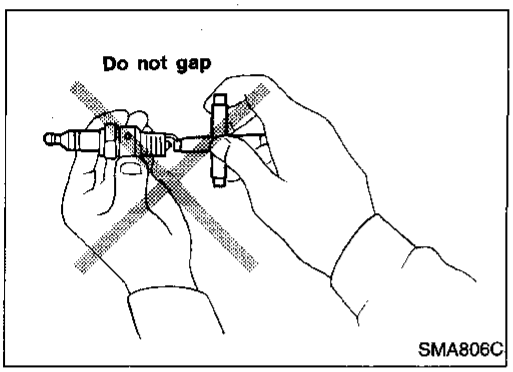

- **Checking and adjusting plug gap is not required.**

3. Install spark plugs. Reconnect ignition wires according to numbers indicated on them.
   Spark plug:
   [O]: 20 - 29 N·m (2.0 - 3.0 kg-m, 14 - 22 ft-lb)

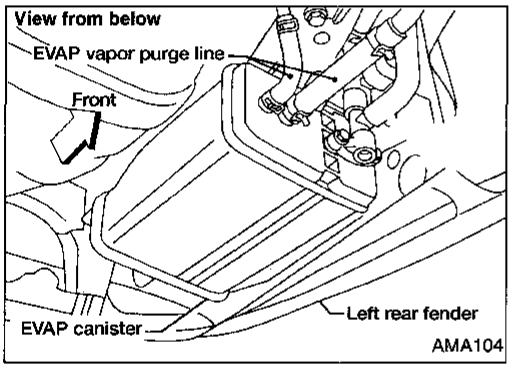

Checking EVAP Vapor Purge Lines

1. Visually inspect EVAP vapor purge lines for improper attachment, cracks, damage, chafing and deterioration.
2. Inspect vacuum relief valve of fuel tank filler cap for clogging, sticking, etc.
   Refer to EC section ("Inspection", "EVAPORATIVE EMISSION SYSTEM").

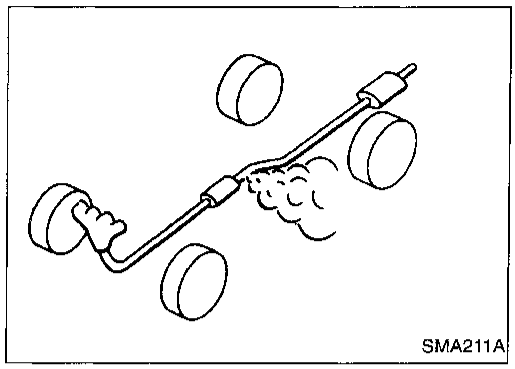

Checking Exhaust System

Check exhaust pipes, muffler and mounting for improper attachment, leaks, cracks, damage, chafing and deterioration.

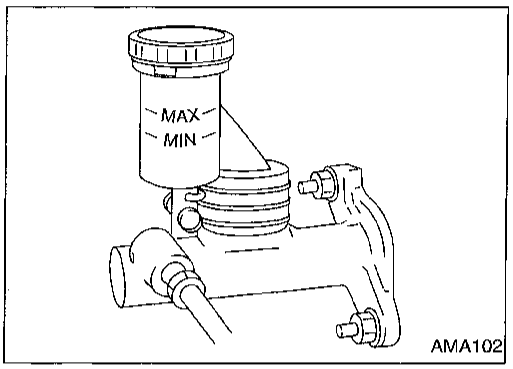

Checking Clutch Fluid Level and Leaks

If fluid level is extremely low, check clutch system for leaks.

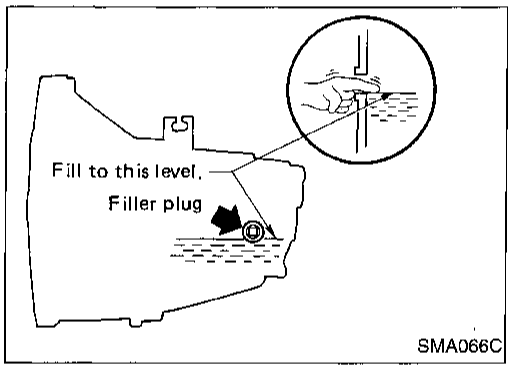

Checking M/T Oil

Check for oil leaks and oil level.

Never start engine while checking oil level.

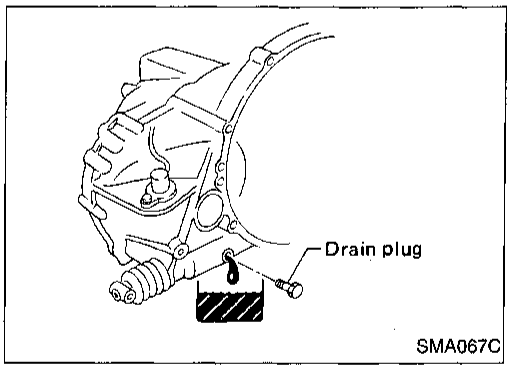

Changing M/T Oil

1. Drain oil from drain plug and refill with new gear oil.
2. Check oil level.

Oil grade: API GL-4, 80W - 90 SUPER MULTI
Oil viscosity:
80W - 90
Oil capacity:
4.5 - 4.8 liters (9-1/2 - 10-1/8 US pt, 7-7/8 - 8-1/2 Imp pt)
Drain plug:
: 15 - 20 N·m (1.5 - 2.0 kg-m, 11 - 14 ft-lb)

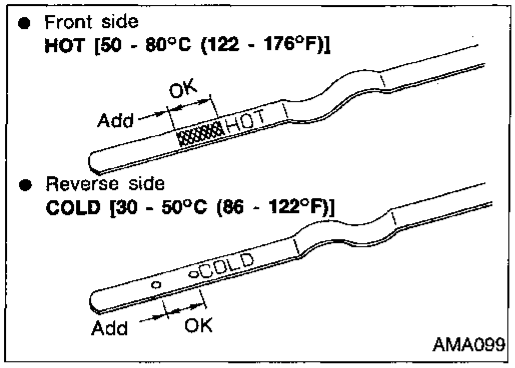

Checking A/T Fluid

1. Warm up engine.
2. Check for fluid leakage.
3. Before driving, fluid level can be checked at fluid temperatures of 30 to 50°C (86 to 122°F) using COLD range on dipstick.

a. Park vehicle on level surface and set parking brake.
b. Start engine and move selector lever through each gear position. Leave selector lever in "P" position.
c. Check fluid level with engine idling.
d. Remove dipstick and wipe clean with lint-free paper.
e. Re-insert dipstick as far as it will go into charging pipe.
f. Remove dipstick and note reading. If reading is at low side of range, add fluid to the charging pipe.

Do not overfill.

4. Drive vehicle for approximately 5 minutes in urban area.
5. Re-check fluid level at fluid temperatures of 50 to 80°C (122 to 176°F) using HOT range on dipstick.

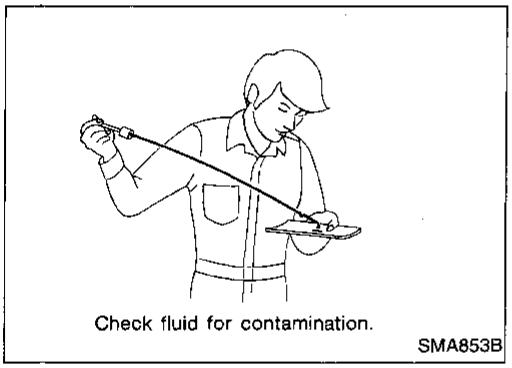

6. Check fluid condition.

- If fluid is very dark or smells burned, refer to AT section for checking operation of A/T. Flush cooling system after repair of A/T.
- If A/T fluid contains frictional material (clutches, bands, etc.), replace radiator and flush cooler line using cleaning solvent and compressed air after repair of A/T. Refer to LC section ("Radiator", "ENGINE COOLING SYSTEM").

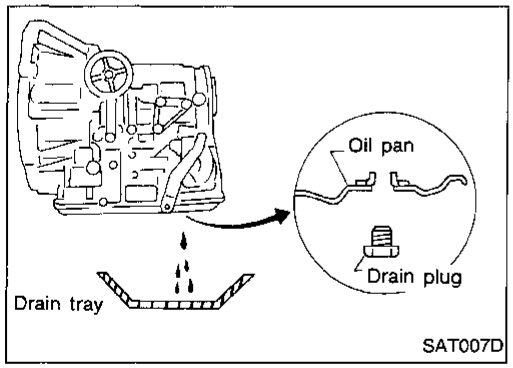

Changing A/T Fluid

1. Warm up A/T fluid.
2. Stop engine.
3. Drain A/T fluid from drain plug and refill with new A/T fluid. Measure amount of fluid drained and refill with equal amount of new fluid.

   Fluid grade:
   Nissan Matic 'D' (Continental U.S. and Alaska) or Genuine Nissan Automatic Transmission Fluid (Canada). Refer to MA-8.
   Fluid capacity (With torque converter):
   9.4 ℓ (10 US qt, 8-1/4 Imp qt)
   Drain plug:
   [O]: 29 - 39 N·m (3.0 - 4.0 kg-m, 22 - 29 ft-lb)
4. Run engine at idle speed for five minutes.
5. Check fluid level and condition. Refer to "Checking A/T Fluid", MA-18. If fluid is still dirty, repeat steps 2 through 5.

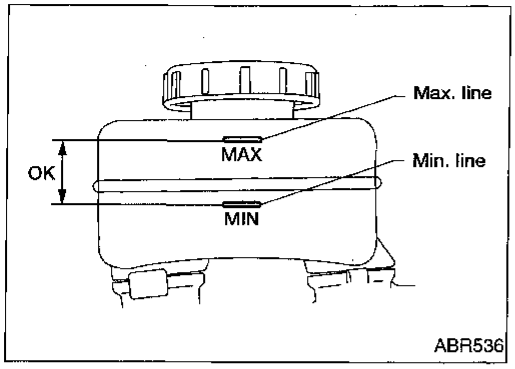

Checking Brake Fluid Level and Leaks

If fluid level is extremely low, check brake system for leaks.

Checking Brake System

Check brake fluid lines and parking brake cables for improper attachment, leaks, chafing, abrasions, deterioration, etc.

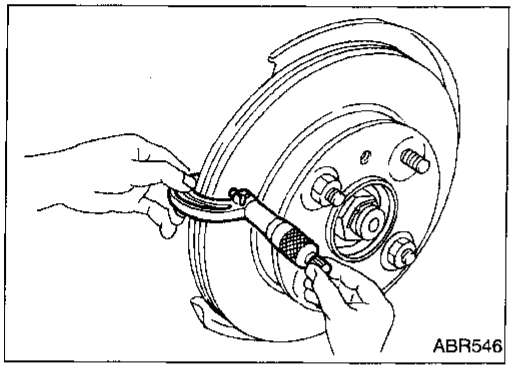

Checking Disc Brake

ROTOR

Check condition and thickness.

Unit: mm (in)

	CL25VB	CL9HA
Standard	22.0 (0.866)	9.0 (0.354)
Minimum	20.0 (0.787)	8.0 (0.315)

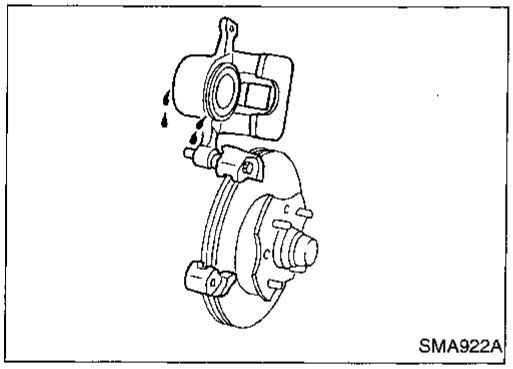

CALIPER

Check operation and for leakage.

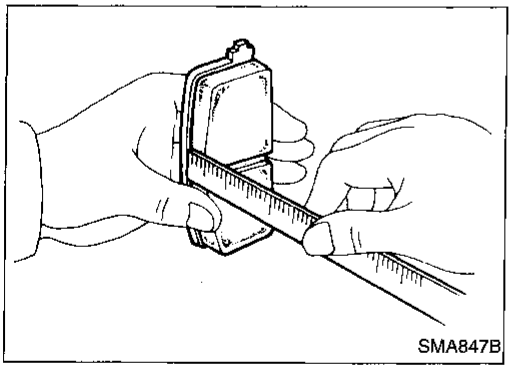

PAD

Measure wear and check for damage.

Unit: mm (in)

	CL25VB	CL9HA
Standard	11.0 (0.433)	10.0 (0.394)
Minimum	2.0 (0.079)	1.5 (0.059)

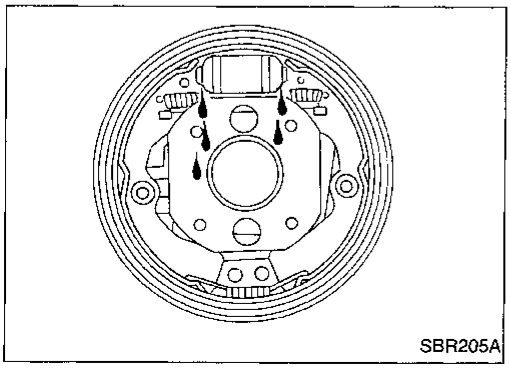

Checking Drum Brake

WHEEL CYLINDER

Check operation and for leakage.

Checking Drum Brake (Cont'd)

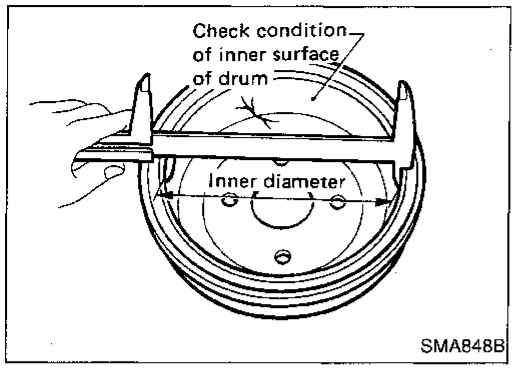

DRUM

Check condition of inner surface.

Standard inner diameter:
228.6 mm (9 in)
Maximum diameter:
230.0 mm (9.06 in)

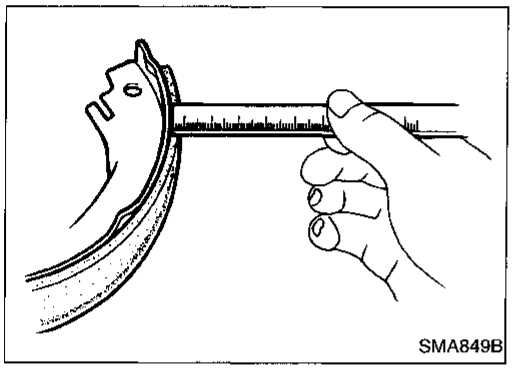

LINING

Measure wear and check for damage.

Standard thickness:
4.3 mm (0.169 in)
Minimum thickness:
1.5 mm (0.059 in)

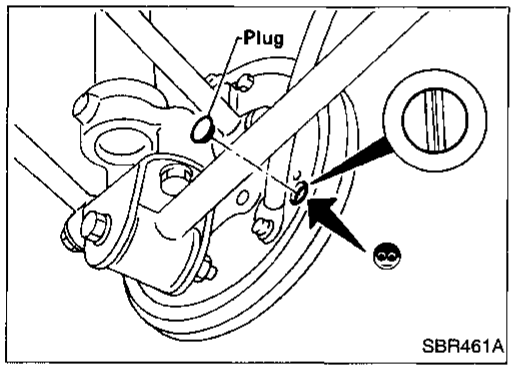

TEMPORARY METHOD FOR CHECKING LINING WEAR

Remove inspection hole plug and check lining wear.

Balancing Wheels

- Adjust wheel balance using road wheel center.
  Wheel balance (Maximum allowable unbalance):
  Refer to MA-23.

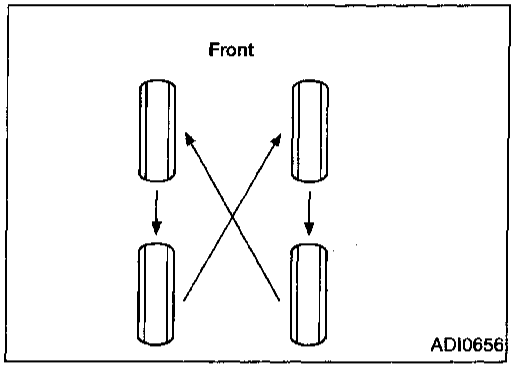

Tire Rotation

- After rotating the tires, adjust the tire pressure.
- Retighten the wheel nuts after aluminum wheels have been run for the first 1,000 km (600 miles) or if a flat tire occurs.
- **Do not include the T-type spare tire when rotating the tires.**
  Wheel nuts:
  : 98 - 118 N·m
  (10 - 12 kg-m, 72 - 87 ft-lb)

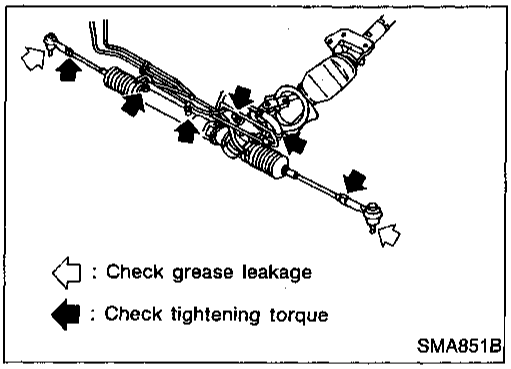

Checking Steering Gear and Linkage

STEERING GEAR

- Check gear housing and boots for looseness, damage and grease leakage.
- Check connection with steering column for looseness.

STEERING LINKAGE

- Check ball joint, dust cover and other component parts for looseness, wear, damage and grease leakage.

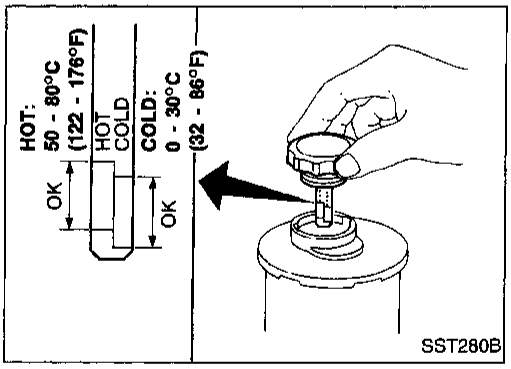

Checking Power Steering Fluid and Lines

Check fluid level with engine off.
Check fluid level with dipstick on reservoir cap. Use "HOT" range at fluid temperatures of 50 to 80°C (122 to 176°F). Use "COLD" range at fluid temperatures of 0 to 30°C (32 to 86°F).

CAUTION:

- **Do not overfill.**
- **Recommended fluid is Automatic Transmission Fluid type DEXRON™ III or equivalent.**

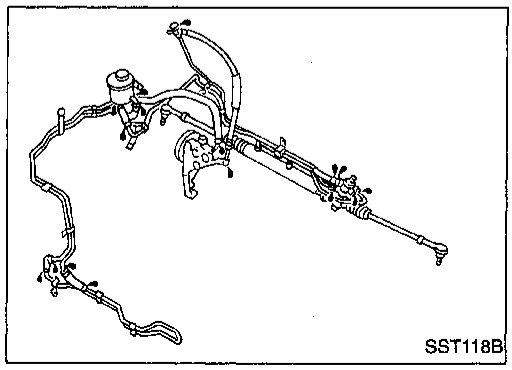

- Check lines for improper attachment, leaks, cracks, damage, loose connections, chafing and deterioration.
- Check rack boots for accumulation of power steering fluid.

Lubricating Locks, Hinges and Hood Latches

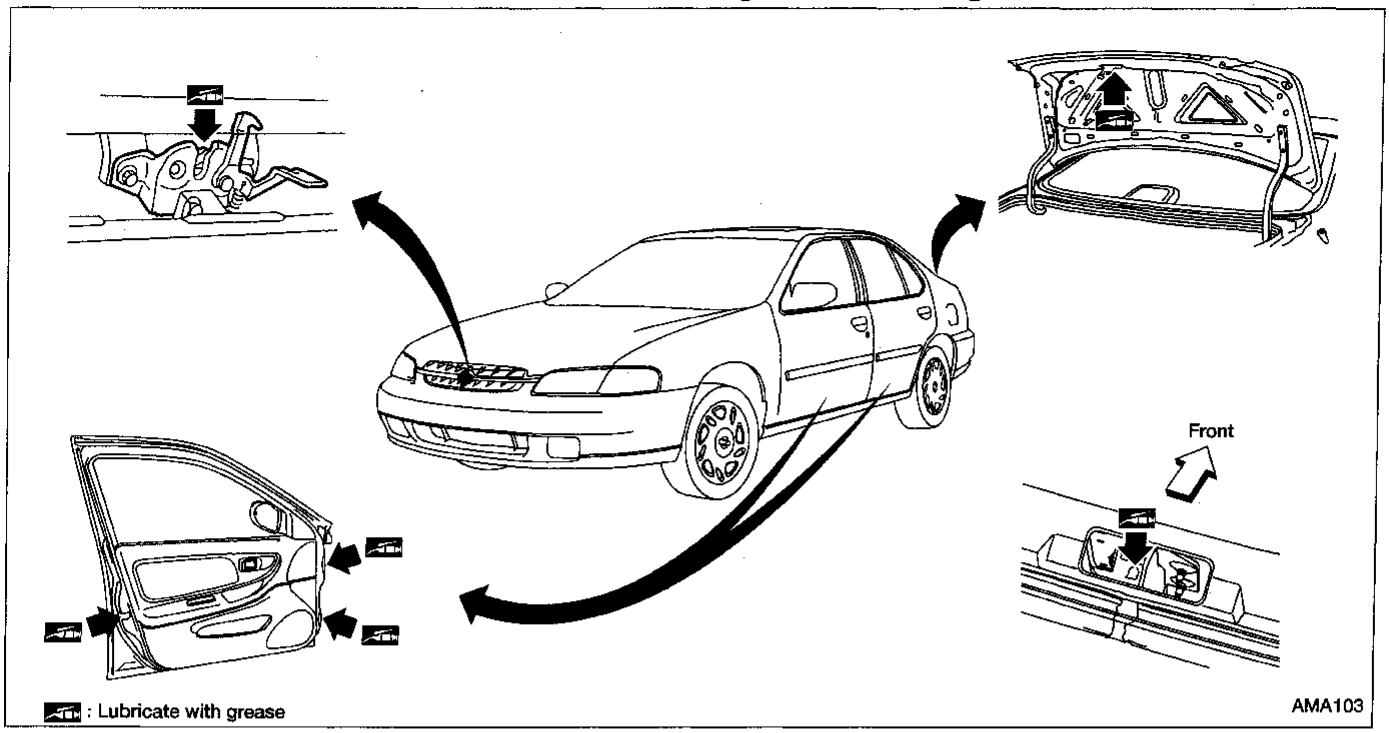

Checking Seat Belts, Buckles, Retractors, Anchors and Adjusters

CAUTION:

- After any collision, inspect all seat belt assemblies, including retractors and other attached hardware (i.e. guide rail set). Nissan recommends to replace all seat belt assemblies in use during a collision, unless not damaged and properly operating after minor collision.
  Also inspect seat belt assemblies not in use during a collision, and replace if damaged or improperly operating.
- If any component of seat belt assembly is questionable, do not repair. Replace as seat belt assembly.
- If the condition of any component of seat belt assembly is questionable, do not have it repaired, but replaced as seat belt assembly.
- If webbing is cut, frayed, or damaged, replace belt assembly.
- Do not spill drinks, oil, etc. on inner lap belt buckle. Never oil tongue and buckle.
- Use a NISSAN genuine seat belt assembly.

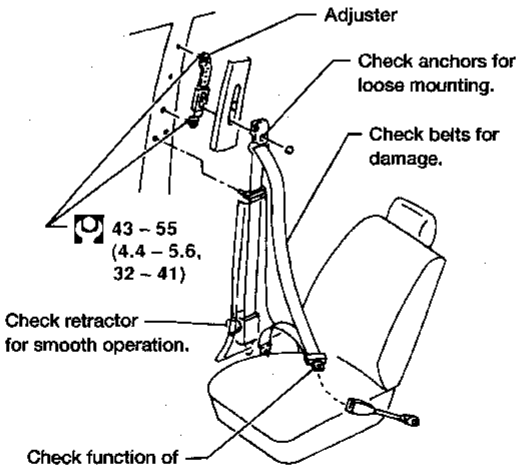

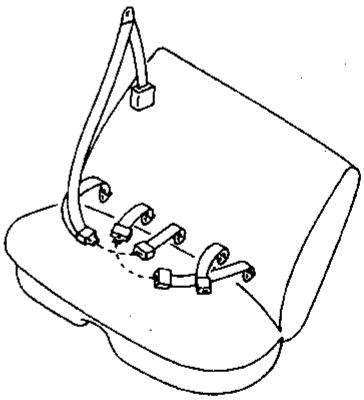

Anchor bolt
43 – 55 (4.4 – 5.6, 32 – 41)

: N·m (kg-m, ft-lb)

AMA100

Engine Maintenance

INSPECTION AND ADJUSTMENT

Spark plug

Standard type	FR5AP-10
Alternative type	FR6AP-10
	FR7AP-10

	Deflection adjustment		Unit: mm (in)	Tension adjustment *1		Unit: N (kg, lb)
	Used belt		New belt	Used belt		New belt
	Limit	After adjustment		Limit	After adjustment	
Generator & Power steering oil pump	8.5 (0.33)	6 - 6.5 (0.24 - 0.26)	5.5 - 6 (0.22 - 0.24)	379 (39, 85)	645 - 736 (66 - 75, 145 - 165)	755 - 843 (77 - 86, 170 - 190)
Air conditioner compressor	9.5 (0.39)	6.5 - 7 (0.26 - 0.28)	6 - 6.5 (0.24 - 0.26)	289 (30, 65)	556 - 645 (57 - 66, 125 - 145)	667 - 755 (68 - 77, 150 - 170)
Applied pushing force	98N (10 kg, 22 lb)			—		

*1: If belt tension guage cannot be installed at check points, check drive belt tension at different location on the belt.

Chassis and Body Maintenance

INSPECTION AND ADJUSTMENT

Wheel balance

Maximum allowable unbalance	Dynamic (at rim flange) g (oz)	10 (0.35) (One side)
	Static g (oz)	20 (0.71)