SECTION ATC

AUTOMATIC AIR CONDITIONER

CONTENTS

PRECAUTIONS

PFP:00001

Precautions for Supplemental Restraint System (SRS) “AIR BAG” and “SEAT BELT PRE-TENSIONER”

EJS001UG

The Supplemental Restraint System such as “AIR BAG” and “SEAT BELT PRE-TENSIONER”, used along with a front seat belt, helps to reduce the risk or severity of injury to the driver and front passenger for certain types of collision. This system includes seat belt switch inputs and dual stage front air bag modules. The SRS system uses the seat belt switches to determine the front air bag deployment, and may only deploy one front air bag, depending on the severity of a collision and whether the front occupants are belted or unbelted.
Information necessary to service the system safely is included in the SRS and SB section of this Service Manual.

WARNING:

- **To avoid rendering the SRS inoperative, which could increase the risk of personal injury or death in the event of a collision which would result in air bag inflation, all maintenance must be performed by an authorized NISSAN/INFINITI dealer.**
- **Improper maintenance, including incorrect removal and installation of the SRS, can lead to personal injury caused by unintentional activation of the system. For removal of Spiral Cable and Air Bag Module, see the SRS section.**
- **Do not use electrical test equipment on any circuit related to the SRS unless instructed to in this Service Manual. SRS wiring harnesses can be identified by yellow and/or orange harnesses or harness connectors.**

Precautions for Working with HFC-134a (R-134a)

EJS001UH

WARNING:

- **CFC-12 (R-12) refrigerant and HFC-134a (R-134a) refrigerant are not compatible. If the refrigerants are mixed compressor failure is likely to occur. Refer ATC-5, "Contaminated Refrigerant" . To determine the purity of HFC-134a (R-134a) in the vehicle and recovery tank, use Refrigerant Recovery/Recycling Recharging equipment and Refrigerant Identifier.**
- **Use only specified lubricant for the HFC-134a (R-134a) A/C system and HFC-134a (R-134a) components. If lubricant other than that specified is used, compressor failure is likely to occur.**
- **The specified HFC-134a (R-134a) lubricant rapidly absorbs moisture from the atmosphere. The following handling precautions must be observed:**
  - **When removing refrigerant components from a vehicle, immediately cap (seal) the component to minimize the entry of moisture from the atmosphere.**
  - **When installing refrigerant components to a vehicle, do not remove the caps (unseal) until just before connecting the components. Connect all refrigerant loop components as quickly as possible to minimize the entry of moisture into system.**
  - **Only use the specified lubricant from a sealed container. Immediately reseal containers of lubricant. Without proper sealing, lubricant will become moisture saturated and should not be used.**
  - **Avoid breathing A/C refrigerant and lubricant vapor or mist. Exposure may irritate eyes, nose and throat. Remove HFC-134a (R-134a) from the A/C system using certified service equipment meeting requirements of SAE J2210 [HFC-134a (R-134a) recycling equipment], or J2209 [HFC-134a (R-134a) recovery equipment]. If accidental system discharge occurs, ventilate work area before resuming service. Additional health and safety information may be obtained from refrigerant and lubricant manufacturers.**
  - **Do not allow lubricant, NISSAN A/C System Lubricant Type S (DH-PS) or equivalent, to come in contact with styrofoam parts. Damage may result.**

Contaminated Refrigerant

EJS001UI

If a refrigerant other than pure HFC-134a (R-134a) is identified in a vehicle, your options are:

- Explain to the customer that environmental regulations prohibit the release of contaminated refrigerant into the atmosphere.
- Explain that recovery of the contaminated refrigerant could damage your service equipment and refrigerant supply.
- Suggest the customer return the vehicle to the location of previous service where the contamination may have occurred.

- If you choose to perform the repair, recover the refrigerant using only **dedicated equipment and containers. Do not recover contaminated refrigerant into your existing service equipment.** If your facility does not have dedicated recovery equipment, you may contact a local refrigerant product retailer for available service. This refrigerant must be disposed of in accordance with all federal and local regulations. In addition, replacement of all refrigerant system components on the vehicle is recommended.
- If the vehicle is within the warranty period, the air conditioner warranty is void. Please contact NISSAN Customer Affairs for further assistance.

General Refrigerant Precautions

EJS001UJ

WARNING:

- **Do not release refrigerant into the air. Use approved recovery/recycling equipment to capture the refrigerant every time an air conditioning system is discharged.**
- **Always wear eye and hand protection (goggles and gloves) when working with any refrigerant or air conditioning system.**
- **Do not store or heat refrigerant containers above 52°C (125°F).**
- **Do not heat a refrigerant container with an open flame; if container warming is required, place the bottom of the container in a warm pail of water.**
- **Do not intentionally drop, puncture, or incinerate refrigerant containers.**
- **Keep refrigerant away from open flames: poisonous gas will be produced if refrigerant burns.**
- **Refrigerant will displace oxygen, therefore be certain to work in well ventilated areas to prevent suffocation.**
- **Do not pressure test or leak test HFC-134a (R-134a) service equipment and/or vehicle air conditioning systems with compressed air during repair. Some mixtures of air and HFC-134a (R-134a) have been shown to be combustible at elevated pressures. These mixtures, if ignited, may cause injury or property damage. Additional health and safety information may be obtained from refrigerant manufacturers.**

Precautions for Leak Detection Dye

EJS001UK

- The A/C system contains a fluorescent leak detection dye used for locating refrigerant leaks. An ultraviolet (UV) lamp is required to illuminate the dye when inspecting for leaks.
- Always wear fluorescence enhancing UV safety goggles to protect your eyes and enhance the visibility of the fluorescent dye.
- The fluorescent dye leak detector is not a replacement for an electronic refrigerant leak detector. The fluorescent dye leak detector should be used in conjunction with an electronic refrigerant leak detector (J-41995).
- For your safety and the customer's satisfaction, read and follow all manufacturer's operating instructions and precautions prior to performing work.
- A compressor shaft seal should not be repaired because of dye seepage. The compressor shaft seal should only be repaired after confirming the leak with an electronic refrigerant leak detector (J-41995).
- Always remove any dye from the leak area after repairs are complete to avoid a misdiagnosis during a future service.
- Do not allow dye to come into contact with painted body panels or interior components. If dye is spilled, clean immediately with the approved dye cleaner. Fluorescent dye left on a surface for an extended period of time **cannot be removed** .
- Do not spray the fluorescent dye cleaning agent on hot surfaces (engine exhaust manifold, etc.).
- Do not use more than one refrigerant dye bottle (1/4 ounce / 7.4 cc) per A/C system.
- Leak detection dyes for HFC-134a (R-134a) and CFC-12 (R-12) A/C systems are different. Do not use HFC-134a (R-134a) leak detection dye in CFC-12 (R-12) A/C systems or CFC-12 (R-12) leak detection dye in HFC-134a (R-134a) A/C systems or A/C system damage may result.
- The fluorescent properties of the dye will remain for over three (3) years unless a compressor failure occurs.

A/C Identification Label

EJS001UL

Vehicles with factory installed fluorescent dye have this identification label on the underside of hood.

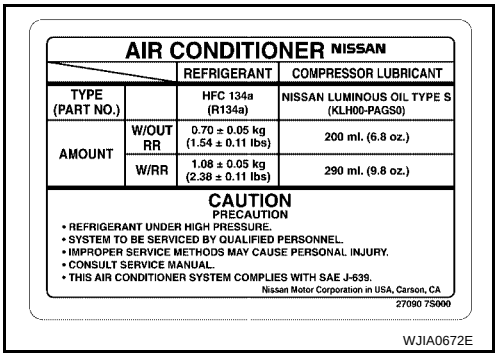

AIR CONDITIONER NISSAN

		REFRIGERANT	COMPRESSOR LUBRICANT
TYPE (PART NO.)		HFC 134a (R134a)	NISSAN LUMINOUS OIL TYPE S (KLH00-PAGS0)
AMOUNT	W/OUT RR	0.70 ± 0.05 kg (1.54 ± 0.11 lbs)	200 ml. (6.8 oz.)
	W/RR	1.08 ± 0.05 kg (2.38 ± 0.11 lbs)	290 ml. (9.8 oz.)

CAUTION
PRECAUTION
- REFRIGERANT UNDER HIGH PRESSURE.
- SYSTEM TO BE SERVICED BY QUALIFIED PERSONNEL.
- IMPROPER SERVICE METHODS MAY CAUSE PERSONAL INJURY.
- CONSULT SERVICE MANUAL.
- THIS AIR CONDITIONER SYSTEM COMPLIES WITH SAE J-639.

Nissan Motor Corporation in USA, Carson, CA
27090 7S000

WJIA0672E

Precautions for Refrigerant Connection

EJS001UM

A new type refrigerant connection has been introduced to all refrigerant lines except the following locations.

- Expansion valve to cooling unit
- Evaporator pipes to evaporator (inside cooling unit)
- Refrigerant pressure sensor

FEATURES OF NEW TYPE REFRIGERANT CONNECTION

- The O-ring has been relocated. It has also been provided with a groove for proper installation. This reduces the possibility of the O-ring being caught in, or damaged by, the mating part. The sealing direction of the O-ring is now set vertically in relation to the contacting surface of the mating part to improve sealing characteristics.
- The reaction force of the O-ring will not occur in the direction that causes the joint to pull out, thereby facilitating piping connections.

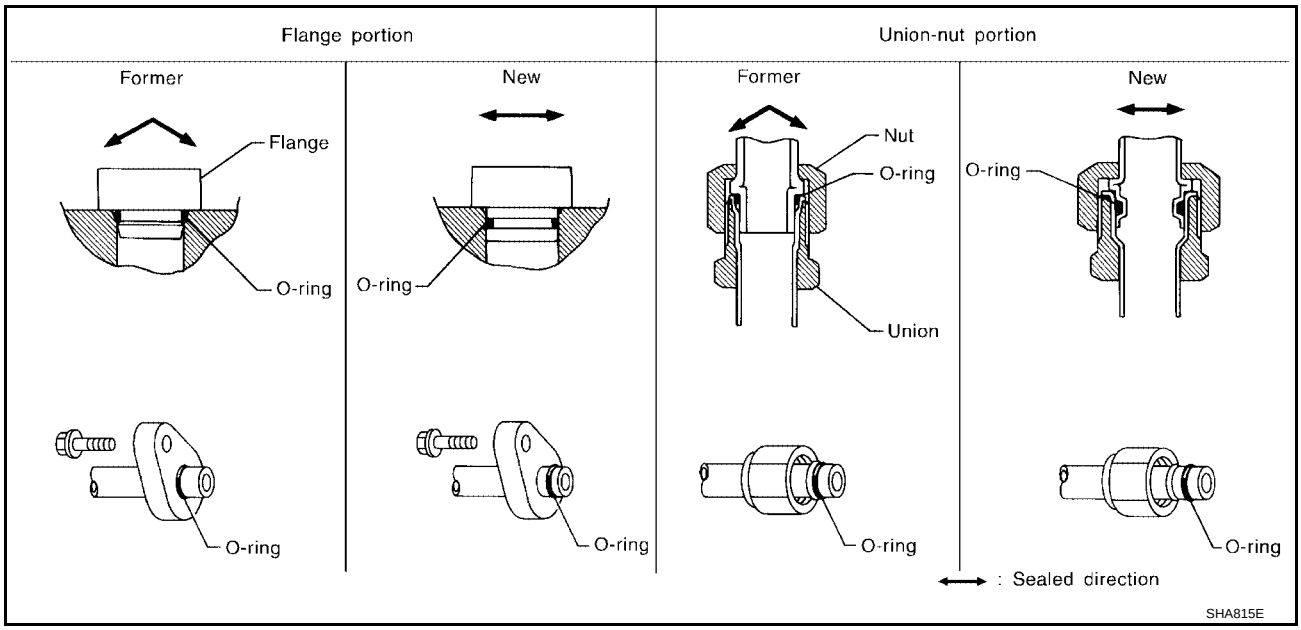

O-RING AND REFRIGERANT CONNECTION

Front A/C Compressor and Condenser

SEC. 214 • 271 • 274 • 276

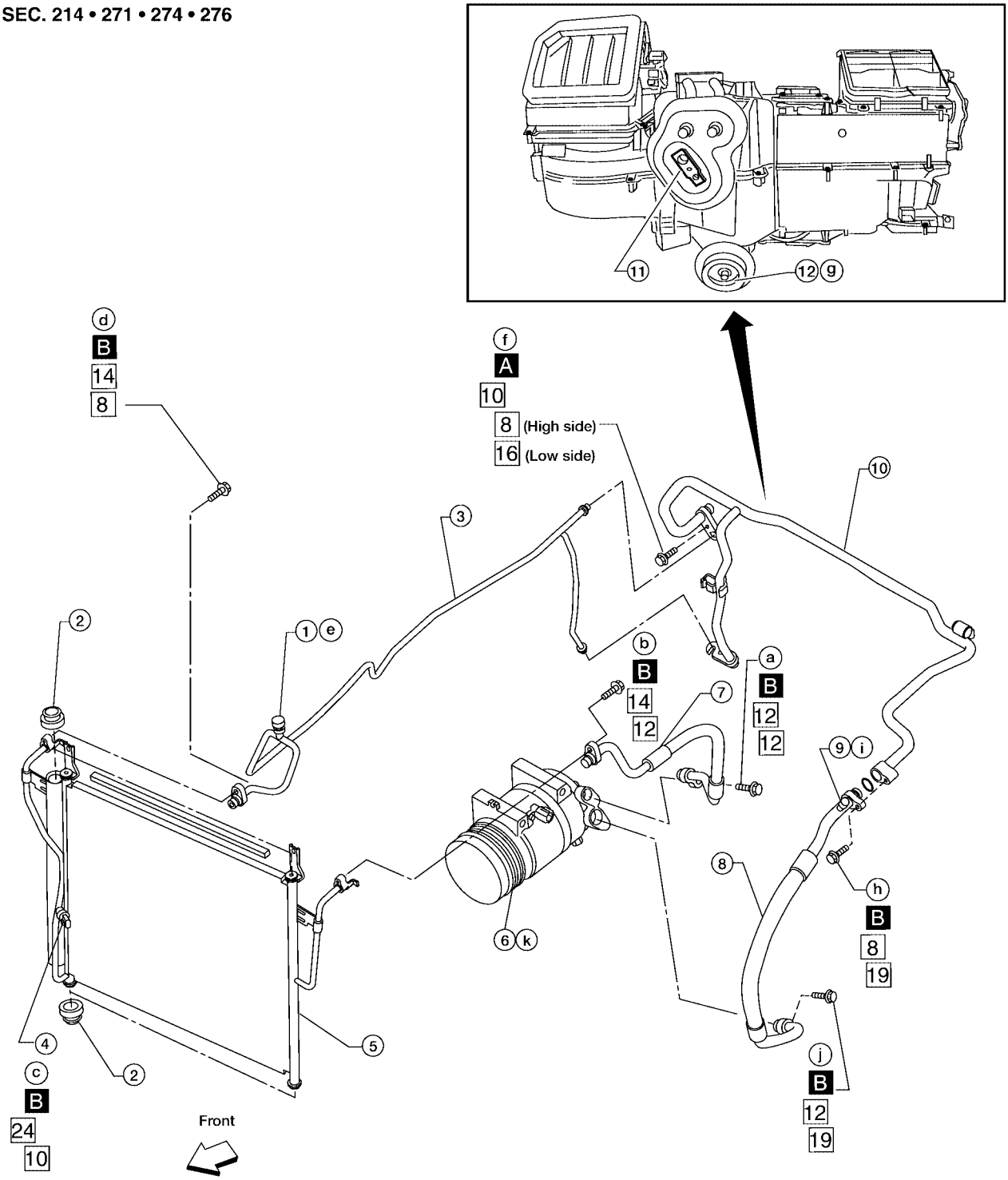

: Refrigerant leak checking order (a-k)

: Tightening torque

: Wrench size

: O-ring size

: N·m (kg-m, in-lb)

A : 3.4 (0.35 , 30)

B : 9.3 (0.95 , 82)

WJIA1578E

1. High-pressure service valve
2. Grommet
3. High-pressure pipe
4. Refrigerant pressure sensor
5. Condenser
6. Compressor shaft seal
7. High-pressure flexible hose
8. Low-pressure flexible hose
9. Low-pressure service valve
10. Low-pressure pipe
11. Expansion valve (front)
12. Drain hose

Rear A/C

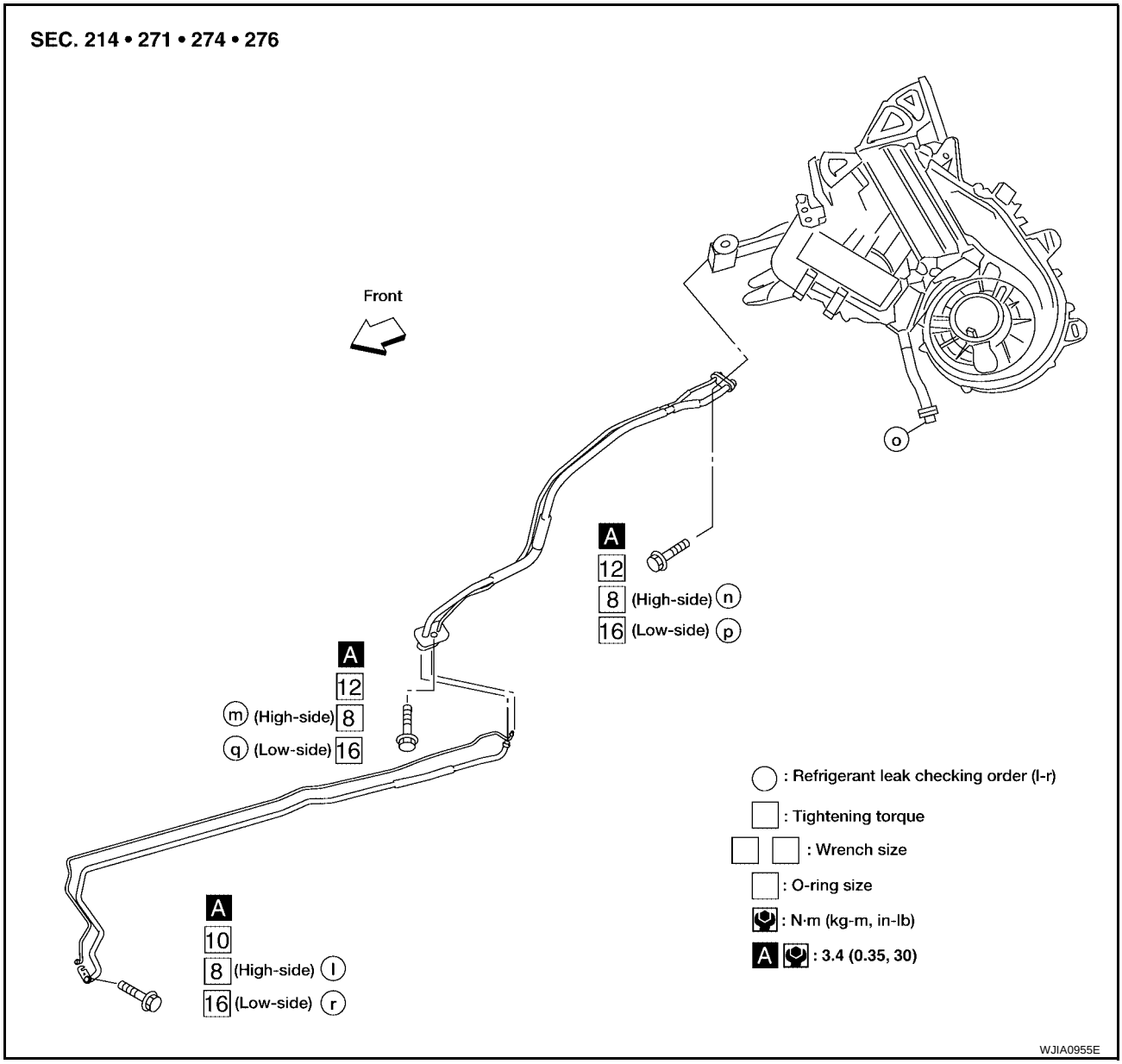

CAUTION:

The new and former refrigerant connections use different O-ring configurations. Do not confuse O-rings since they are not interchangeable. If a wrong O-ring is installed, refrigerant will leak at or around the connection.

O-Ring Part Numbers and Specifications

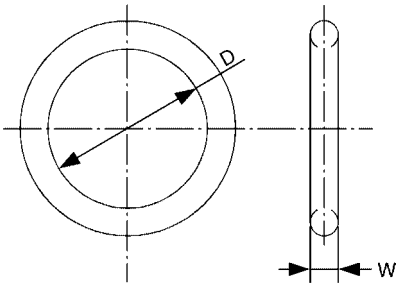

SHA814E

Connection type	O-ring size	Part number*	D mm (in)	W mm (in)
New	8	92471 N8210	6.8 (0.268)	1.85 (0.0728)
Former	10	J2476 89956	9.25 (0.3642)	1.78 (0.0701)
New	12	92472 N8210	10.9 (0.429)	2.43 (0.0957)
Former		92475 71L00	11.0 (0.433)	2.4 (0.094)
New	16	92473 N8210	13.6 (0.535)	2.43 (0.0957)
Former		92475 72L00	14.3 (0.563)	2.3 (0.091)
New	19	92474 N8210	16.5 (0.650)	2.43 (0.0957)
Former		92477 N8200	17.12 (0.6740)	1.78 (0.0701)
New	24	92195 AH300	21.8 (0.858)	2.4 (0.094)

*: Always check with the Parts Department for the latest parts information.

WARNING:

Make sure all refrigerant is discharged into the recycling equipment and the pressure in the system is less than atmospheric pressure. Then gradually loosen the discharge side hose fitting and remove it.

CAUTION:

When replacing or cleaning refrigerant cycle components, observe the following.

- **When the compressor is removed, store it in the same position as it is when mounted on the car. Failure to do so will cause lubricant to enter the low pressure chamber.**
- **When connecting tubes, always use a torque wrench and a back-up wrench.**
- **After disconnecting tubes, immediately plug all openings to prevent entry of dirt and moisture.**
- **When installing an air conditioner in the vehicle, connect the pipes as the final stage of the operation. Do not remove the seal caps of pipes and other components until just before required for connection.**
- **Allow components stored in cool areas to warm to working area temperature before removing seal caps. This prevents condensation from forming inside A/C components.**
- **Thoroughly remove moisture from the refrigeration system before charging the refrigerant.**
- **Always replace used O-rings.**
- **When connecting tube, apply lubricant to circle of the O-rings shown in illustration. Be careful not to apply lubricant to threaded portion.**
  Lubricant name: NISSAN A/C System Lubricant Type S (DH-PS) or equivalent
  Part number: KLH00-PAGS0
- **O-ring must be closely attached to dented portion of tube.**
- **When replacing the O-ring, be careful not to damage O-ring and tube.**
- **Connect tube until you hear it click, then tighten the nut or bolt by hand until snug. Make sure that the O-ring is installed to tube correctly.**

- **After connecting line, conduct leak test and make sure that there is no leakage from connections. When the gas leaking point is found, disconnect that line and replace the O-ring. Then tighten connections of seal seat to the specified torque.**

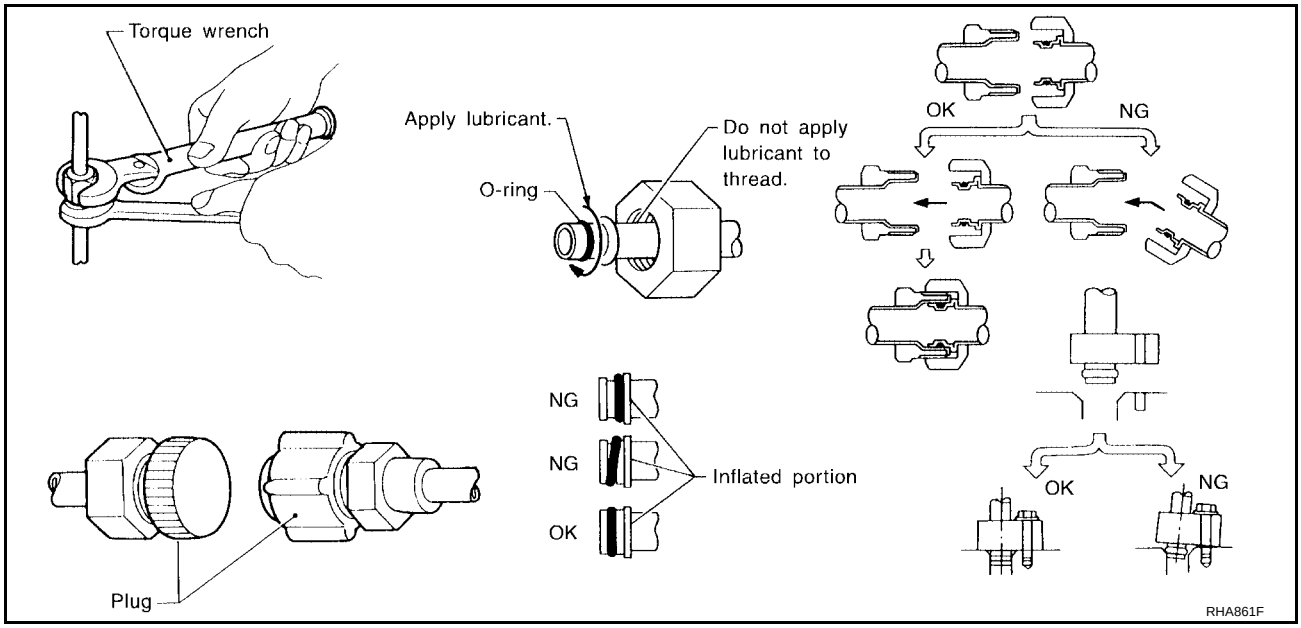

Precautions for Servicing Compressor

EJS001UN

- **Plug all openings to prevent moisture and foreign matter from entering.**
- **When the compressor is removed, store it in the same position as it is when mounted on the car.**
- **When replacing or repairing compressor, follow “Maintenance of Lubricant Quantity in Compressor” exactly. Refer to ATC-22, "Maintenance of Lubricant Quantity in Compressor" .**
- **Keep friction surfaces between clutch and pulley clean. If the surface is contaminated with lubricant, wipe it off by using a clean waste cloth moistened with thinner.**
- **After compressor service operation, turn the compressor shaft by hand more than 5 turns in both directions. This will equally distribute lubricant inside the compressor. After the compressor is installed, let the engine idle and operate the compressor for 1 hour.**
- **After replacing the compressor magnet clutch, apply voltage to the new one and check for normal operation. Refer to ATC-165, "Removal and Installation for Compressor Clutch"**

Precautions for Service Equipment

EJS001UO

RECOVERY/RECYCLING EQUIPMENT

Follow the manufacturer's instructions for machine operation and machine maintenance. Never introduce any refrigerant other than that specified into the machine.

ELECTRONIC LEAK DETECTOR

Follow the manufacturer's instructions for tester operation and tester maintenance.

VACUUM PUMP

The lubricant contained inside the vacuum pump is not compatible with the specified lubricant for HFC-134a (R-134a) A/C systems. The vent side of the vacuum pump is exposed to atmospheric pressure so the vacuum pump lubricant may migrate out of the pump into the service hose. This is possible when the pump is switched off after evacuation (vacuuming) and hose is connected to it.
To prevent this migration, use a manual valve situated near the hose-to-pump connection, as follows.

- Usually vacuum pumps have a manual isolator valve as part of the pump. Close this valve to isolate the service hose from the pump.
- For pumps without an isolator, use a hose equipped with a manual shut-off valve near the pump end. Close the valve to isolate the hose from the pump.
- If the hose has an automatic shut off valve, disconnect the hose from the pump: as long as the hose is connected, the valve is open and lubricating oil may migrate.

Some one-way valves open when vacuum is applied and close under a no vacuum condition. Such valves may restrict the pump's ability to pull a deep vacuum and are not recommended.

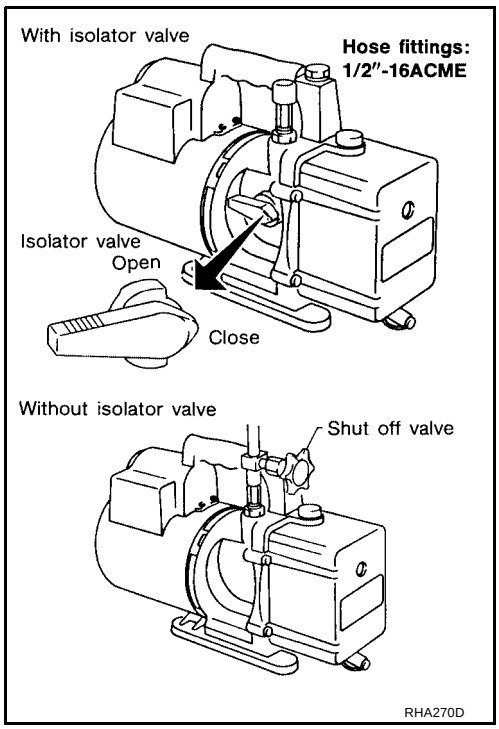

MANIFOLD GAUGE SET

Be certain that the gauge face indicates HFC-134a (R-134a or 134a). Make sure the gauge set has 1/2″-16 ACME threaded connections for service hoses. Confirm the set has been used only with refrigerant HFC-134a (R-134a) along with specified lubricant.

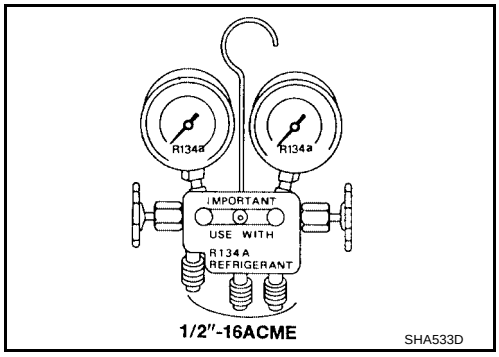

SERVICE HOSES

Be certain that the service hoses display the markings described (colored hose with black stripe). All hoses must include positive shut-off devices (either manual or automatic) near the end of the hoses opposite the manifold gauge.

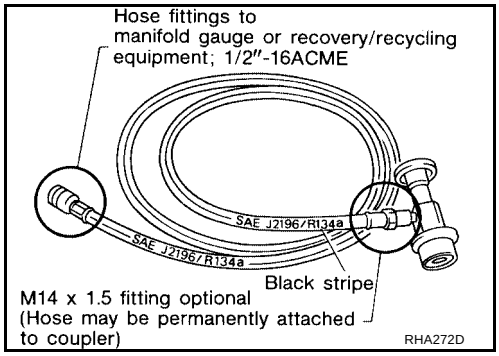

SERVICE COUPLERS

Never attempt to connect HFC-134a (R-134a) service couplers to a CFC-12 (R-12) A/C system. The HFC-134a (R-134a) couplers will not properly connect to the CFC-12 (R-12) system. If an improper connection is attempted, discharging and contamination may occur.

Shut-off valve rotation	A/C service valve
Clockwise	Open
Counterclockwise	Close

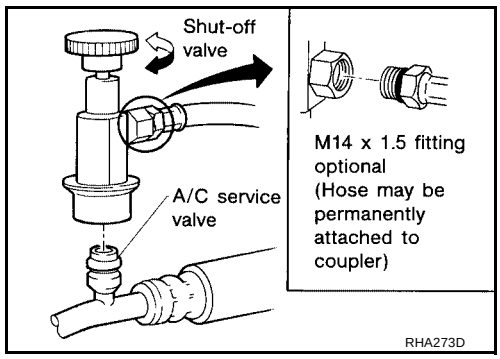

REFRIGERANT WEIGHT SCALE

Verify that no refrigerant other than HFC134a (R-134a) and specified lubricants have been used with the scale. If the scale controls refrigerant flow electronically, the hose fitting must be 1/2”-16 ACME.

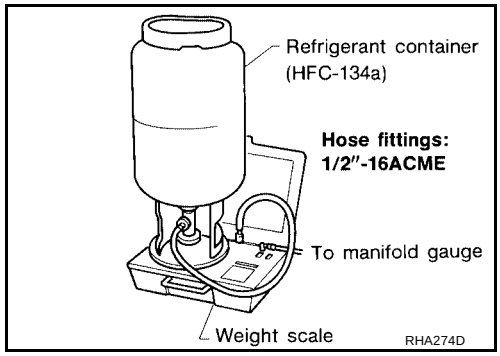

CHARGING CYLINDER

Using a charging cylinder is not recommended. Refrigerant may be vented into air from cylinder's top valve when filling the cylinder with refrigerant. Also, the accuracy of the cylinder is generally less than that of an electronic scale or of quality recycle/recharge equipment.

Wiring Diagrams and Trouble Diagnosis

EJS001UP

When you read wiring diagrams, refer to the following:

- GI-15, "How to Read Wiring Diagrams"
- PG-4, "POWER SUPPLY ROUTING CIRCUIT"

When you perform trouble diagnosis, refer to the following:

- GI-9, "How to Follow Trouble Diagnoses"
- GI-27, "How to Perform Efficient Diagnosis for an Electrical Incident"

PREPARATION

PFP:00002

Special Service Tools

EJS001UQ

The actual shapes of Kent-Moore tools may differ from those of special service tools illustrated here.

Tool number (Kent-Moore No.) Tool name	Description
— (J-38873-A) Pulley installer 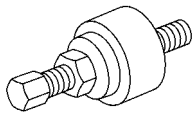 LHA171	Installing pulley
KV99233130 (J-29884) Pulley puller 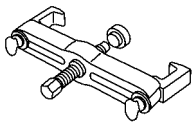 LHA172	Removing pulley

HFC-134a (R-134a) Service Tools and Equipment

EJS001UR

Never mix HFC-134a (R-134a) refrigerant and/or its specified lubricant with CFC-12 (R-12) refrigerant and/or its lubricant.
Separate and non-interchangeable service equipment must be used for handling each type of refrigerant/lubricant.
Refrigerant container fittings, service hose fittings and service equipment fittings (equipment which handles refrigerant and/or lubricant) are different between CFC-12 (R-12) and HFC-134a (R-134a). This is to avoid mixed use of the refrigerants/lubricant.
Adapters that convert one size fitting to another must never be used refrigerant/lubricant contamination will occur and compressor failure will result.

Tool number (Kent-Moore No.) Tool name	Description
HFC-134a (R-134a) refrigerant 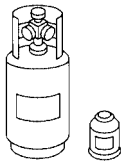 S-NT196	Container color: Light blue Container marking: HFC-134a (R-134a) Fitting size: Thread size ● large container 1/2"-16 ACME
KLH00-PAGS0 (—) NISSAN A/C System Lubricant Type S (DH-PS)  S-NT197	Type: Poly alkylene glycol oil (PAG), type S (DH-PS) Application: HFC-134a (R-134a) swash plate compressors (NISSAN only) Lubricity: 40 m ℓ (1.4 US fl oz, 1.4 Imp fl oz)
(ACR2005-NI) ACR5 A/C Service Center 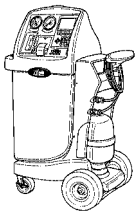 WJIA0293E	Refrigerant recovery/recycling and recharging

Tool number (Kent-Moore No.) Tool name		Description
(J-41995) Electronic refrigerant leak detector	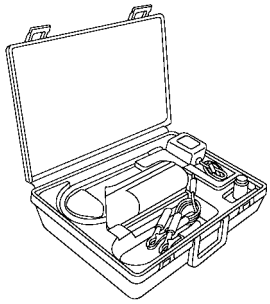 AHA281A	Power supply: ● DC 12V (Battery terminal)
(J-43926) Refrigerant dye leak detection kit Kit includes: (J-42220) UV lamp and UV safety goggles (J-41459) Refrigerant dye injector (J-41447) qty. 24 HFC-134a (R-134a) refrigerant dye (J-43872) Refrigerant dye cleaner	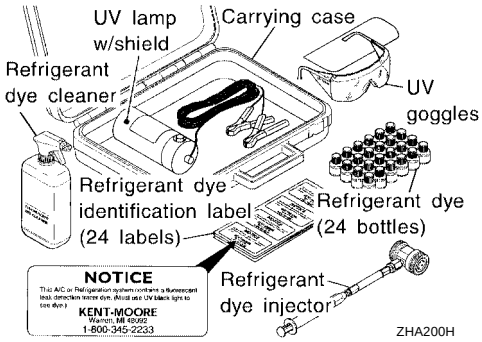 ZHA200H	Power supply: ● DC 12V (Battery terminal)
(J-42220) Fluorescent dye leak detector	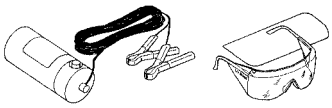 SHA438F	Power supply: ● DC 12V (Battery terminal) For checking refrigerant leak when fluorescent dye is installed in A/C system. Includes: UV lamp and UV safety goggles
(J-41447) HFC-134a (R-134a) Fluorescent leak detection dye (Box of 24, 1/4 ounce bottles)	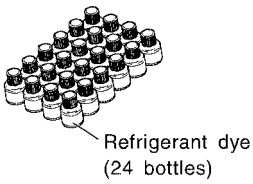 SHA439F	Application: For HFC-134a (R-134a) PAG oil Container: 1/4 ounce (7.4cc) bottle (Includes self-adhesive dye identification labels for affixing to vehicle after charging system with dye.)
(J-41459) HFC-134a (R-134a) Dye injector Use with J-41447, 1/4 ounce bottle	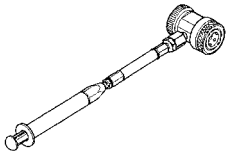 SHA440F	For injecting 1/4 ounce of fluorescent leak detection dye into A/C system.
(J-43872) Refrigerant dye cleaner	 SHA441F	For cleaning dye spills.

Tool number (Kent-Moore No.) Tool name		Description
(J-39183-C) Manifold gauge set (with hoses and couplers)	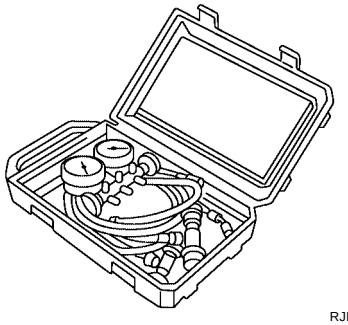 RJIA0196E	Identification: ● The gauge face indicates R-134a. Fitting size-Thread size ● 1/2"-16 ACME
Service hoses ● High side hose (J-39500-72B) ● Low side hose (J-39500-72R) ● Utility hose (J-39500-72Y)	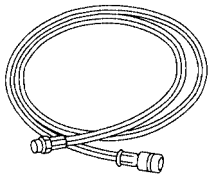 S-NT201	Hose color ● Low side hose: Blue with black stripe ● High side hose: Red with black stripe ● Utility hose: Yellow with black stripe or green with black stripe Hose fitting to gauge: ● 1/2"-16 ACME
Service couplers ● High side coupler (J-39500-20A) ● Low side coupler (J-39500-24A)	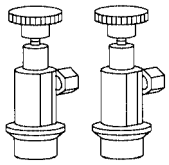 S-NT202	Hose fitting to service hose: ● M14 x 1.5 fitting is optional or permanently attached.
(J-39699) Refrigerant weight scale	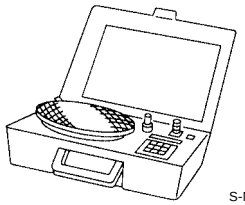 S-NT200	For measuring of refrigerant Fitting size-Thread size ● 1/2"-16 ACME
(J-39649) Vacuum pump (Including the isolator valve)	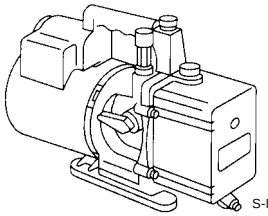 S-NT203	Capacity: ● Air displacement: 4 CFM ● Micron rating: 20 microns ● Oil capacity: 482 g (17 oz) Fitting size-Thread size ● 1/2"-16 ACME

Commercial Service Tools

EJS001US

Tool name		Description
(J-41810-NI) Refrigerant identifier equipment- (R-134a)	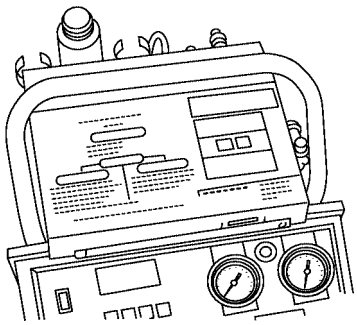 RJIA0197E	For checking refrigerant purity and system contamination
Power tool	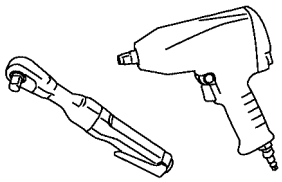 PBIC0190E	Loosening bolts and nuts
(J-44614) Clutch disc holding tool	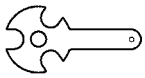 WHA230	Clutch disc holding tool

REFRIGERATION SYSTEM

PFP:KA990

Refrigerant Cycle

EJS001UT

REFRIGERANT FLOW

The refrigerant flows in the standard pattern, that is, through the compressor, the condenser with liquid tank, through the front and rear evaporators, and back to the compressor. The refrigerant evaporation through the evaporator coils are controlled by front and rear externally equalized expansion valves, located inside the front and rear evaporator cases.

Refrigerant System Protection

EJS001UU

REFRIGERANT PRESSURE SENSOR

The refrigerant system is protected against excessively high or low pressures by the refrigerant pressure sensor, located on the condenser. If the system pressure rises above or falls below the specifications, the refrigerant pressure sensor detects the pressure inside the refrigerant line and sends a voltage signal to the ECM. The ECM de-energizes the A/C relay to disengage the magnetic compressor clutch when pressure on the high pressure side detected by refrigerant pressure sensor is over about 2,746 kPa (28 kg/cm^2 , 398 psi), or below about 120 kPa (1.22 kg/cm^2 , 17.4 psi).

PRESSURE RELIEF VALVE

The refrigerant system is also protected by a pressure relief valve, located in the rear head of the compressor. When the pressure of refrigerant in the system increases to an abnormal level [more than 2,990 kPa (30.5 kg/cm^2 , 433.6 psi)], the release port on the pressure relief valve automatically opens and releases refrigerant into the atmosphere.

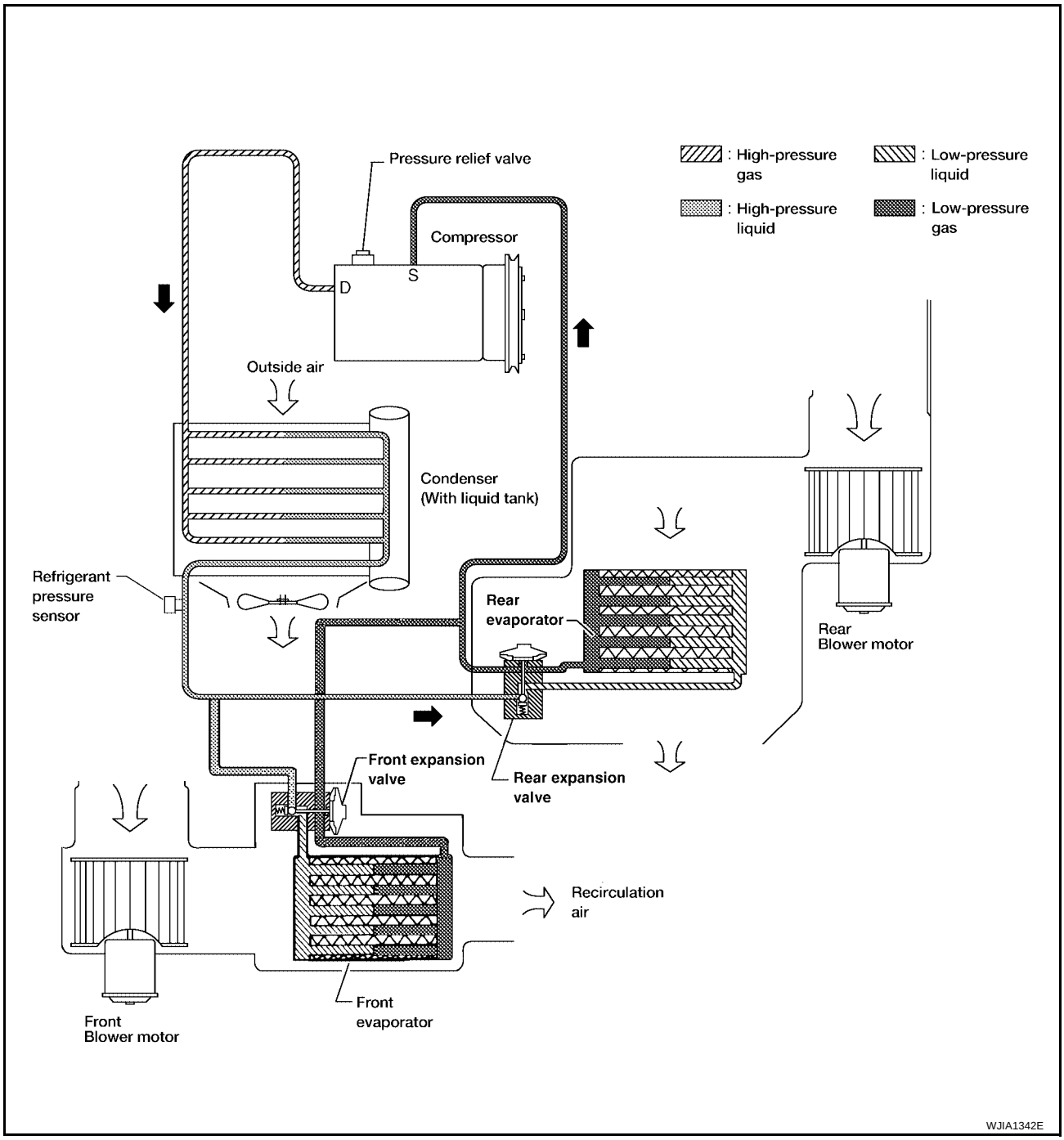

Component Layout

EJS001UV

FRONT REFRIGERATION SYSTEM

SEC. 270 • 271

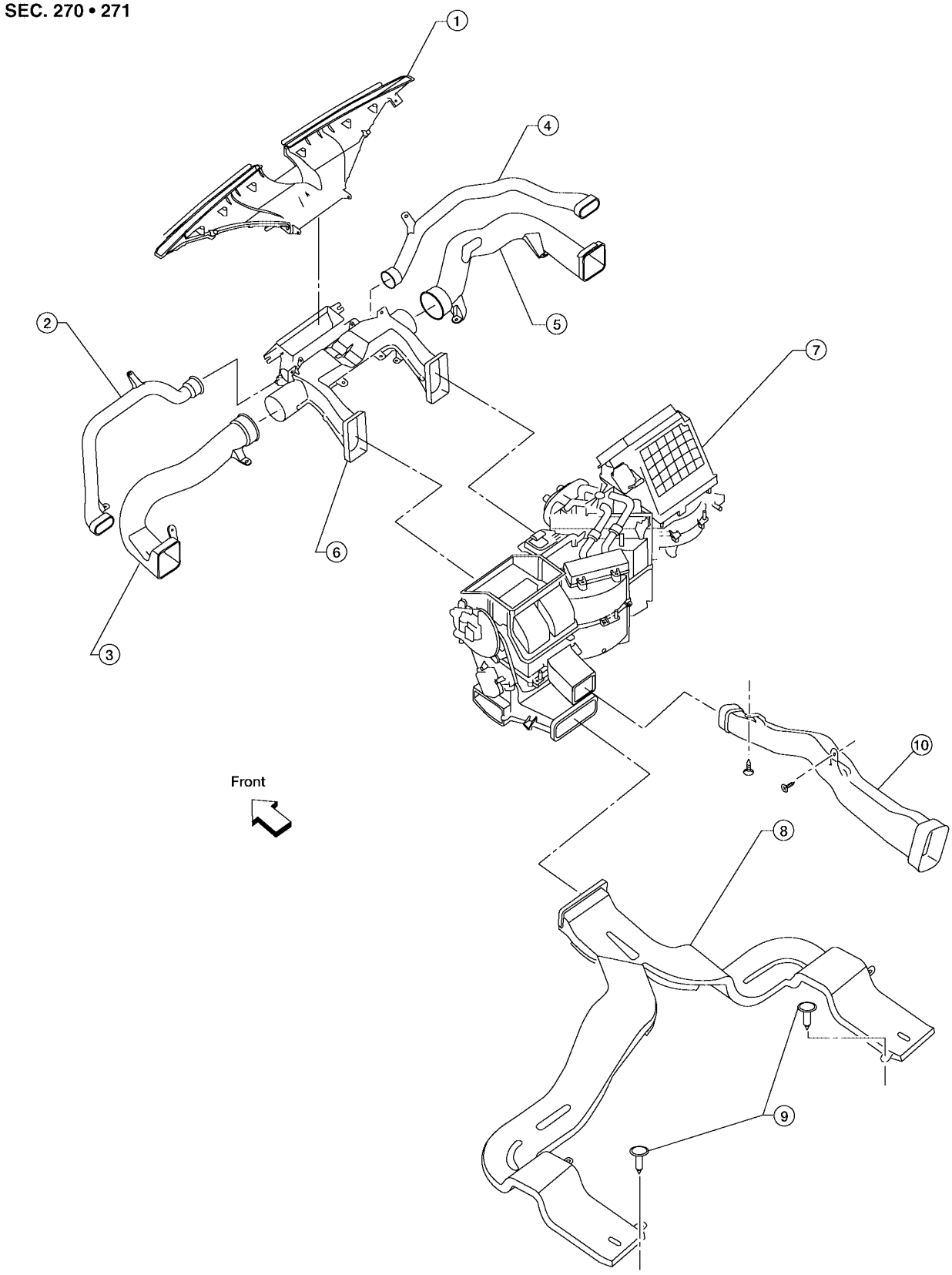

1. Defroster nozzle
2. LH side demister duct
3. LH ventilator duct
4. RH side demister duct
5. RH ventilator duct
6. Center ventilator duct
7. Front heater and cooling unit assembly
8. Floor duct
9. Clips
10. Heat duct

REAR REFRIGERATION SYSTEM

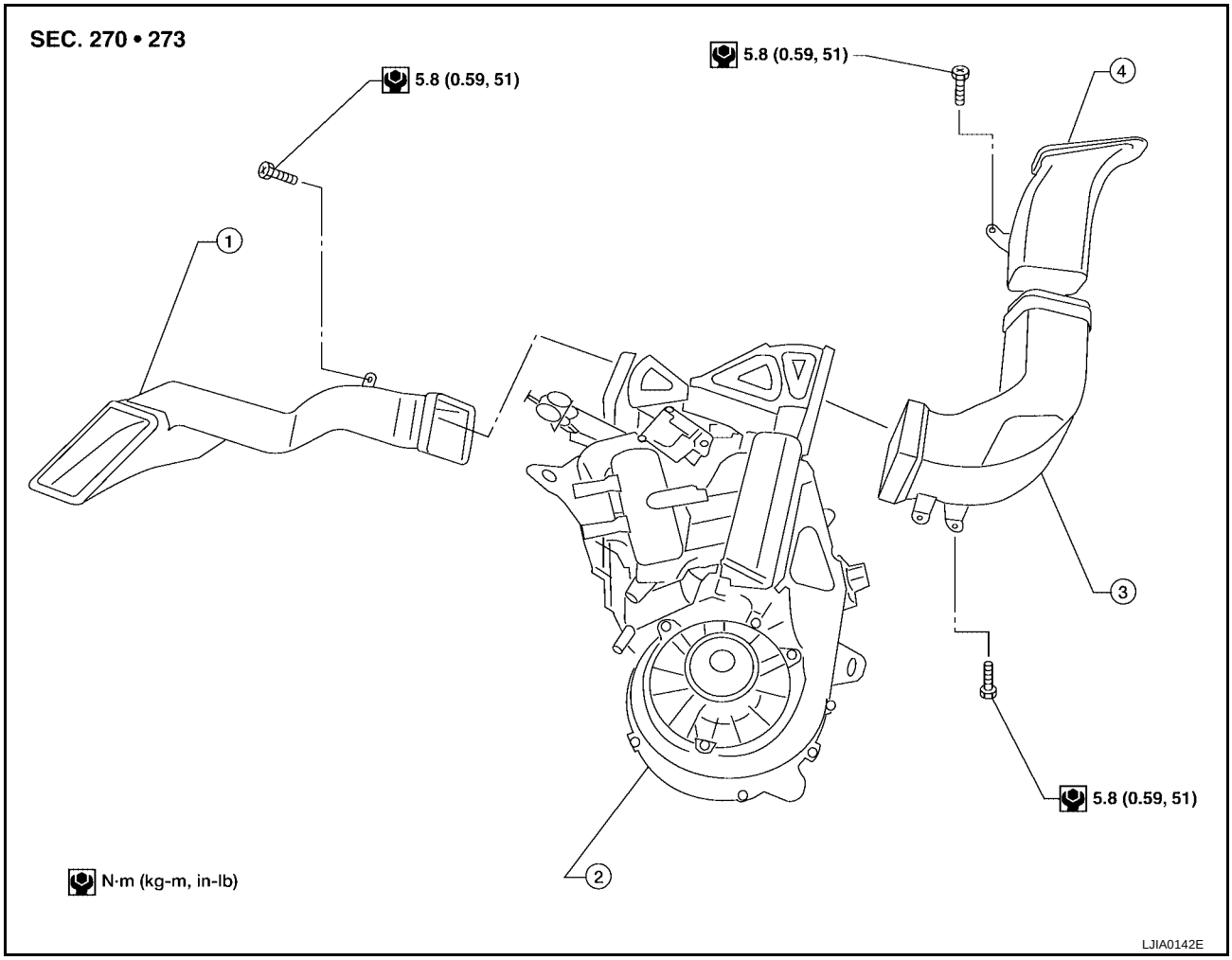

1. Rear floor duct
2. Rear heater and cooling unit assembly
3. Rear lower overhead duct
4. Rear upper overhead duct

LUBRICANT

PFP:KLG00

Maintenance of Lubricant Quantity in Compressor

EJS001UW

The lubricant in the compressor circulates through the system with the refrigerant. Add lubricant to compressor when replacing any component or after a large refrigerant leakage has occurred. It is important to maintain the specified amount.
If lubricant quantity is not maintained properly, the following malfunctions may result:

- Lack of lubricant: May lead to a seized compressor
- Excessive lubricant: Inadequate cooling (thermal exchange interference)

LUBRICANT

Name: NISSAN A/C System Lubricant Type S (DH-PS) or equivalent
Part number: KLH00-PAGS0

CHECKING AND ADJUSTING

CAUTION:
If excessive lubricant leakage is noted, do not perform the lubricant return operation.
Start the engine and set the following conditions:

Test Condition

- **Engine speed: Idling to 1,200 rpm**
- **A/C switch: On**
- **Blower speed: Max. position**
- **Temp. control: Optional [Set so that intake air temperature is 25° to 30° C (77° to 86°F)]**
- **Intake position: Recirculation ( )**
- **Perform lubricant return operation for about ten minutes**

Adjust the lubricant quantity according to the following table.

Lubricant Adjusting Procedure for Components Replacement Except Compressor

After replacing any of the following major components, add the correct amount of lubricant to the system.
Amount of lubricant to be added:

Part replaced	Lubricant to be added to system	Remarks
	Amount of lubricant m ℓ (US fl oz, Imp fl oz)	
Front evaporator	75 (2.5, 2.6)	—
Rear evaporator	75 (2.5, 2.6)	—
Condenser	75 (2.5, 2.6)	—
Liquid tank	5 (0.2, 0.2)	Add if compressor is not replaced.
In case of refrigerant leak	30 (1.0, 1.1)	Large leak
	—	Small leak *1

- *1: If refrigerant leak is small, no addition of lubricant is needed.

Lubricant Adjustment Procedure for Compressor Replacement

1. Before connecting recovery/recycling equipment to vehicle, check recovery/recycling equipment gauges. No refrigerant pressure should be displayed. If NG, recover refrigerant from equipment lines.
2. Connect recovery/recycling equipment to vehicle. Confirm refrigerant purity in supply tank using recovery/recycling equipment and refrigerant identifier. If NG, refer to ATC-5, "Contaminated Refrigerant" .
3. Confirm refrigerant purity in vehicle A/C system using recovery/recycling equipment and refrigerant identifier. If NG, refer to ATC-5, "Contaminated Refrigerant" .
4. Discharge refrigerant into the refrigerant recovery/recycling equipment. Measure lubricant discharged into the recovery/recycling equipment.
5. Drain the lubricant from the “old” (removed) compressor into a graduated container and recover the amount of lubricant drained.
6. Drain the lubricant from the “new” compressor into a separate, clean container.

7. Measure an amount of new lubricant installed equal to amount drained from “old” compressor. Add this lubricant to “new” compressor through the suction port opening.
8. Measure an amount of new lubricant equal to the amount recovered during discharging. Add this lubricant to “new” compressor through the suction port opening.
9. If the liquid tank also needs to be replaced, add an additional 5 mℓ (0.2 US fl oz, 0.2 Imp fl oz) of lubricant at this time.
   Do not add this 5 mℓ (0.2 US fl oz, 0.2 Imp fl oz) of lubricant if only replacing the compressor.

Lubricant adjusting procedure for compressor replacement

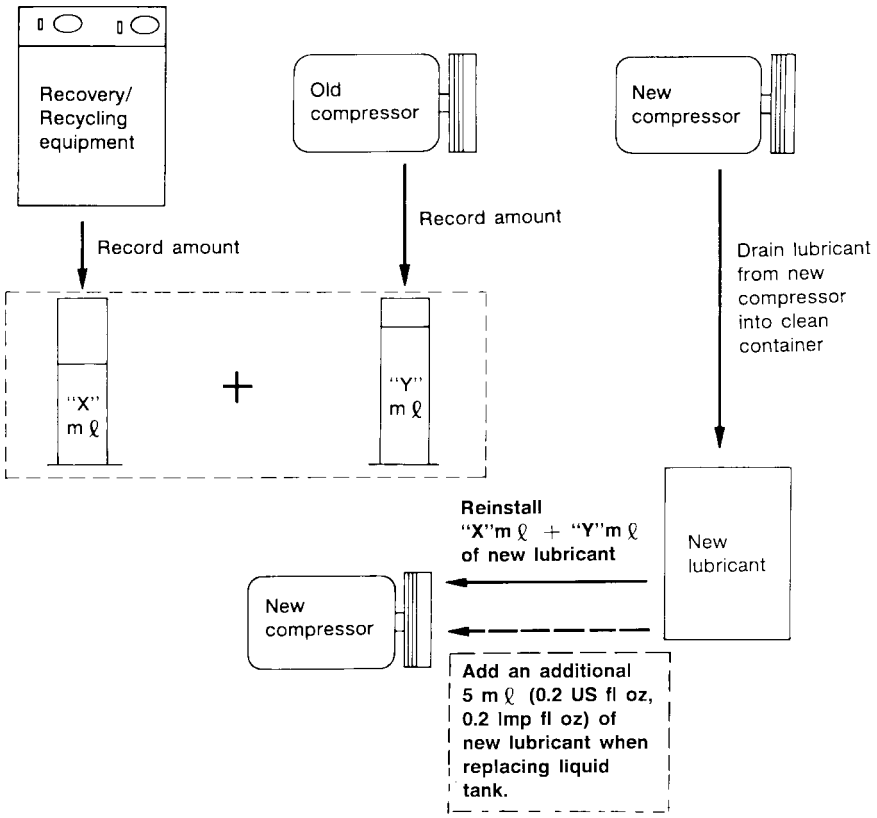

RHA065DD

AIR CONDITIONER CONTROL

PFP:27500

Description

EJS001UX

The front air control provides automatic regulation of the vehicle's interior temperature. The system is based on the driver's and passenger's selected "set temperature", regardless of the outside temperature changes. This is done by utilizing a microcomputer, also referred to as the front air control, which receives input signals from the following six sensors:

- Ambient sensor
- In-vehicle sensor
- Intake sensor
- Optical sensor (one sensor for driver and passenger side)
- PBR (Position Balanced Resistor).
- Vehicle speed sensor

The front air control uses these signals (including the set temperature) to automatically control:

- Outlet air volume
- Air temperature
- Air distribution

The front air control also provides separate regulation of the vehicle's interior temperature for the rear passenger area. The system is based on the temperature and rear blower settings selected from rear control switches located on the front air control, or from the temperature and rear blower settings selected from rear control switches on the rear air control, when the front air control switches are set to the rear position.

The front air control is used to select:

- Outlet air volume
- Air temperature/distribution

Operation

EJS001UY

AIR MIX DOORS CONTROL

The air mix doors are automatically controlled so that in-vehicle temperature is maintained at a predetermined value by: The temperature setting, ambient temperature, in-vehicle temperature and amount of sunload.

BLOWER SPEED CONTROL

Blower speed is automatically controlled based on temperature setting, ambient temperature, in-vehicle temperature, intake temperature, amount of sunload and air mix door position.
When AUTO switch is pressed, the blower motor starts to gradually increase air flow volume (if required).
When engine coolant temperature is low, the blower motor operation is delayed to prevent cool air from flowing.

INTAKE DOOR CONTROL

The intake door is automatically controlled by: The temperature setting, ambient temperature, in-vehicle temperature, intake temperature, amount of sunload and ON-OFF operation of the compressor.

MODE DOOR CONTROL

The mode door is automatically controlled by: The temperature setting, ambient temperature, in-vehicle temperature, intake temperature and amount of sunload.

DEFROSTER DOOR CONTROL

The defroster door is controlled by: Turning the defroster dial to front defroster.

MAGNET CLUTCH CONTROL

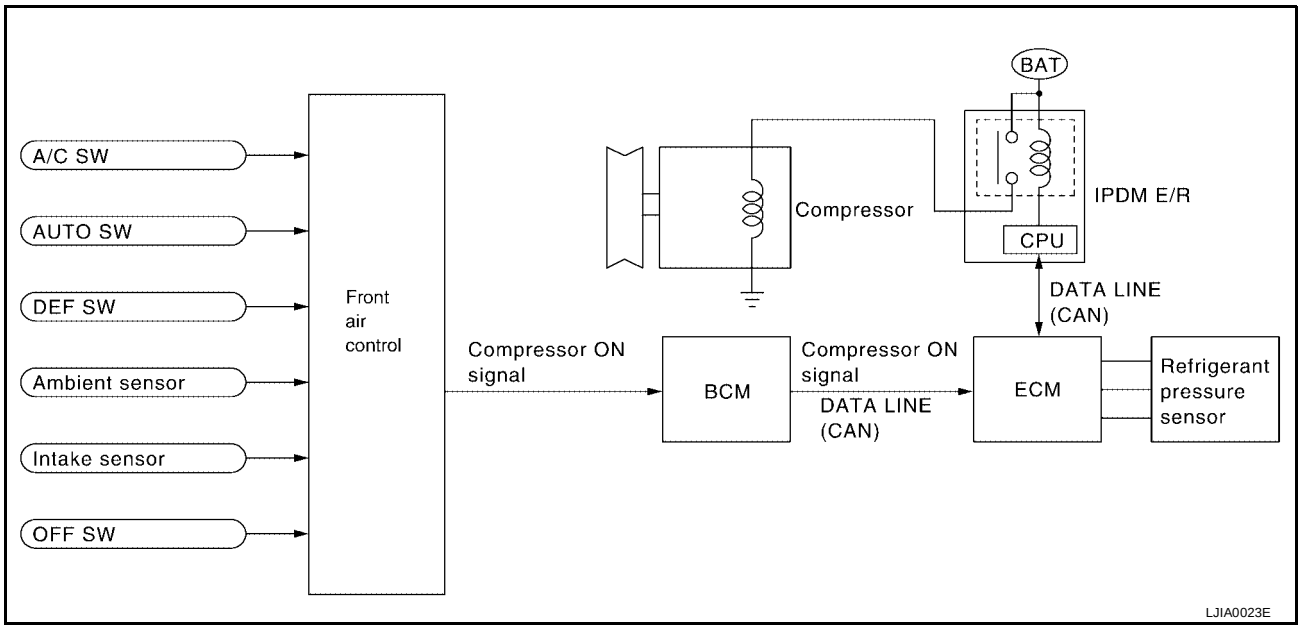

When A/C switch or DEF switch is pressed, front air control inputs compressor ON signal to BCM.
BCM sends compressor ON signal to ECM, via CAN communication line.
ECM judges whether compressor can be turned ON, based on each sensor status (refrigerant pressure sensor signal, throttle angle sensor, etc.). If it judges compressor can be turned ON, it sends compressor ON signal to IPDM E/R, via CAN communication line.
Upon receipt of compressor ON signal from ECM, IPDM E/R turns air conditioner relay ON to operate compressor.

SELF-DIAGNOSTIC SYSTEM

The self-diagnostic system is built into the front air control to quickly locate the cause of symptoms. Refer to ATC-53, "A/C System Self-diagnosis Function"

Description of Control System

EJS001UZ

The control system consists of input sensors, switches, the front air control (microcomputer) and outputs. The relationship of these components is shown in the figure below:

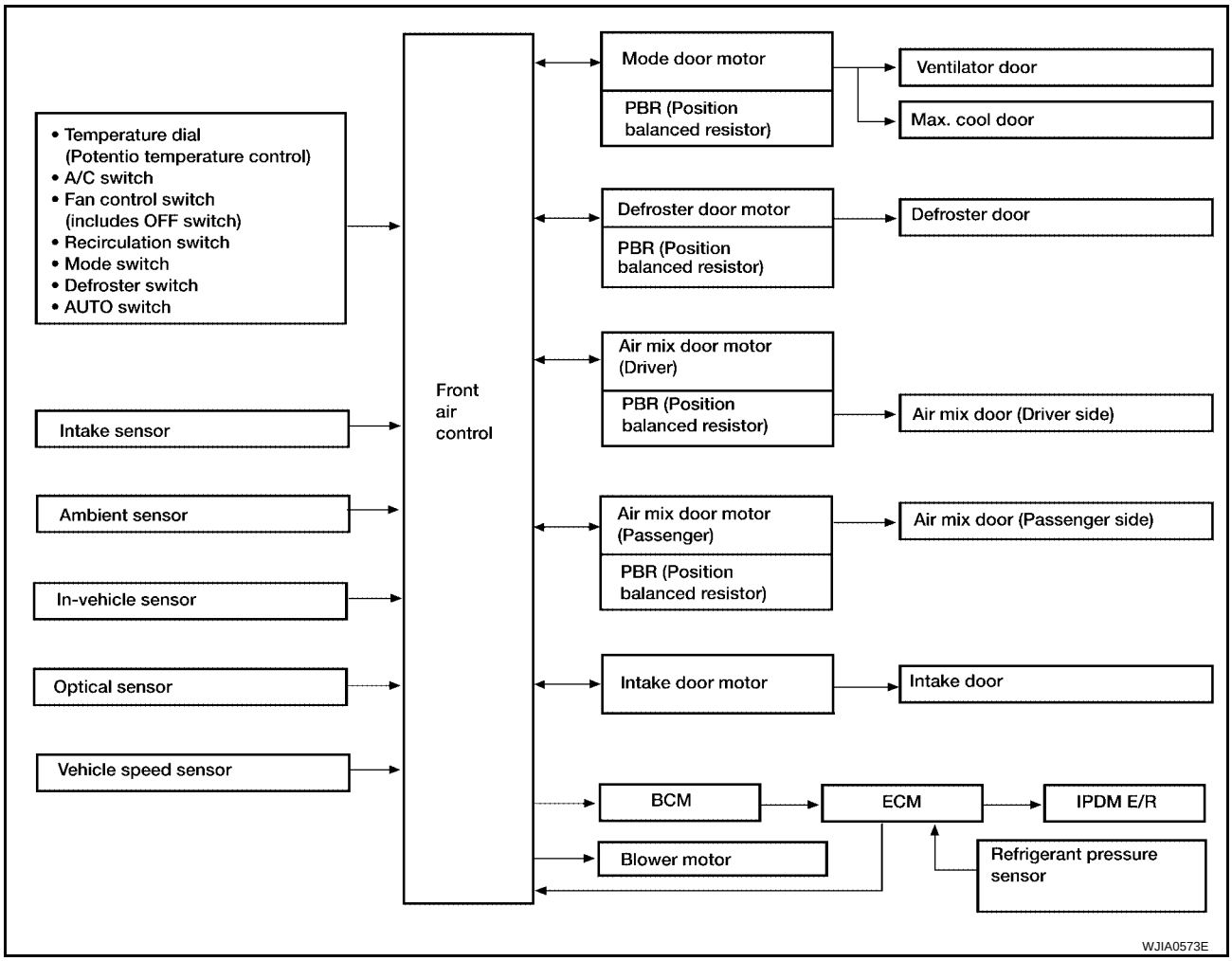

Control Operation

EJS001V0

Front air control

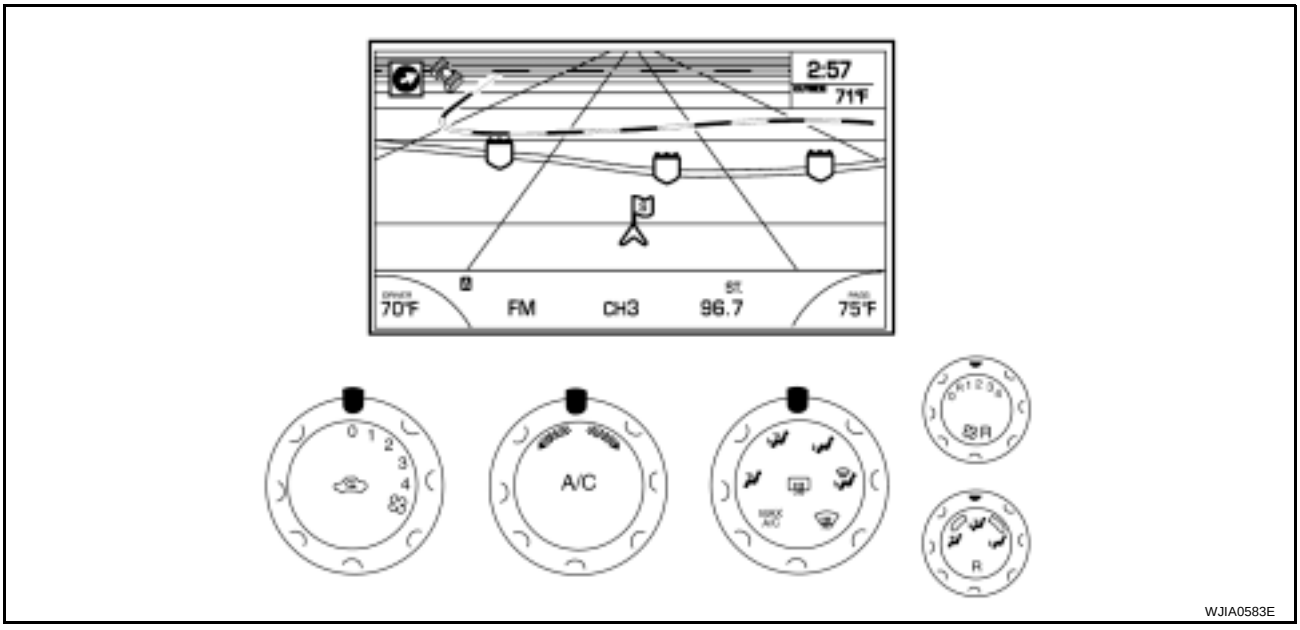

DISPLAY SCREEN

Displays the operational status of the system.

AUTO SWITCH

- The compressor, intake doors, air mix doors, outlet doors and blower speed are automatically controlled so that the in-vehicle temperature will reach, and be maintained at the set temperature selected by the operator.
- When pressing AUTO switch, air inlet, air outlet, blower speed, and discharge air temperature are automatically controlled.

TEMPERATURE SWITCH (TEMPERATURE CONTROL) (DRIVER SIDE)

Increases or decreases the set temperature.

TEMPERATURE SWITCH (TEMPERATURE CONTROL) (PASSENGER SIDE)

Increases or decreases the set temperature.

TEMPERATURE SWITCH (TEMPERATURE AND MODE CONTROL) (REAR)

Increases or decreases the set temperature. The mode also changes from floor at full hot setting, to floor/panel mid-range (warm) setting, and then to panel on full cold setting.

RECIRCULATION () SWITCH

- When REC switch is ON, REC switch indicator turns ON, and air inlet is set to REC.
- When REC switch is turned OFF, or when compressor is turned from ON to OFF, REC switch is automatically turned OFF. REC mode can be re-entered by pressing REC switch again.
- REC switch is not operated when DEF switch is turned ON, or at the D/F position.

DEFROSTER (DEF) SWITCH

Positions the air outlet doors to the defrost position. Also positions the intake doors to the outside air position.

REAR WINDOW DEFOGGER SWITCH

When switch is ON, rear window is defogged.

OFF SWITCH

The compressor and blower are OFF, the intake doors are set to the outside air position, and the air outlet doors are set to the foot (75% foot and 25% defrost) position.

A/C SWITCH

The compressor is ON or OFF.
(Pressing the A/C switch when the AUTO switch is ON will turn off the A/C switch and compressor.)

MODE SWITCH

Controls the air discharge outlets.

FRONT BLOWER CONTROL SWITCH

Manually control the blower speed. Seven speeds are available for manual control (as shown on the display screen).

Rear Air Control

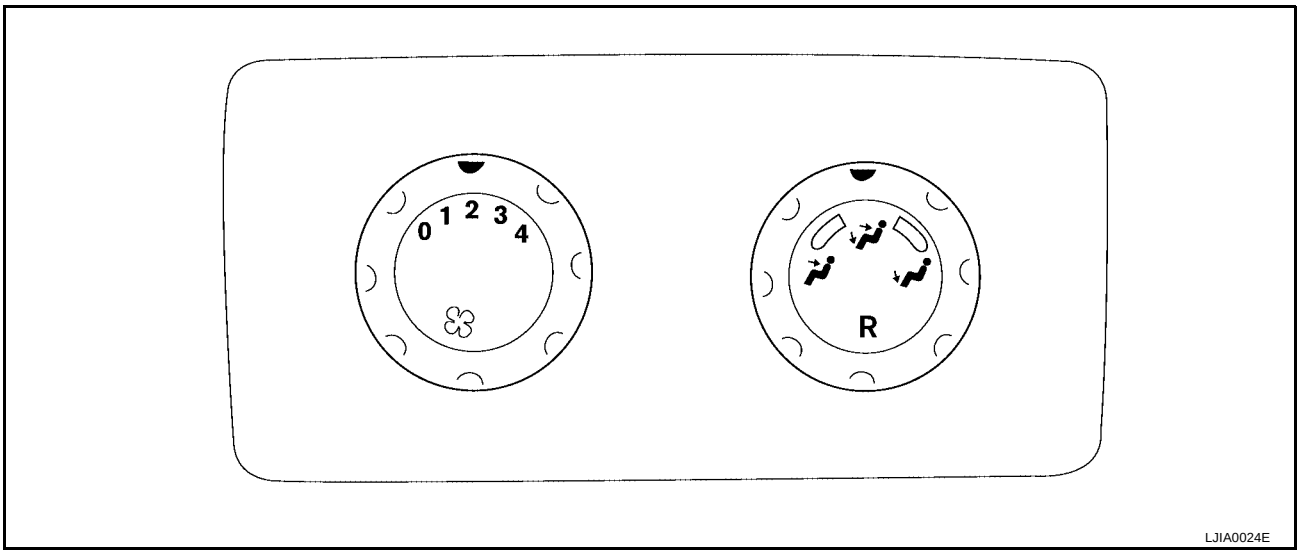

TEMPERATURE SWITCH (TEMPERATURE AND MODE CONTROL)

The temperature increases or decreases the set temperature. The mode also changes from floor at full hot setting, to floor/panel at mid-range (warm) setting, and then to panel at full cold setting.

REAR BLOWER CONTROL SWITCH

When the rear blower switch (front) is in the OFF position, the rear blower motor cannot operate.
When the rear blower switch (front) is in the REAR position, it allows the rear blower switch (rear) to control the rear blower motor speed. In any other position (1-4), the rear blower switch (front) controls the rear blower motor speed regardless of the rear blower switch (rear) position.

Discharge Air Flow

EJS001V1

FRONT

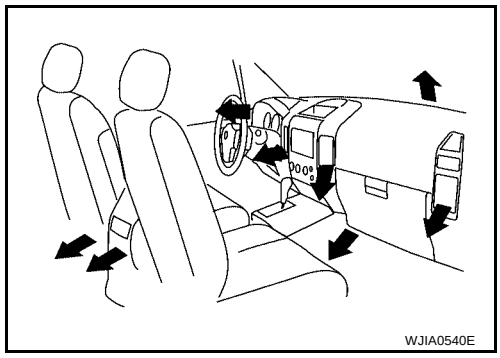

Discharge air flow

Mode door position	Air outlet/distribution		
	Vent	Foot	Defroster
	100%	–	–
	50%	50%	–
	–	75%(100%)	25% (–)
	–	60%	40%
	–	–	100%

( ): Manually control

WJIA0528E

REAR

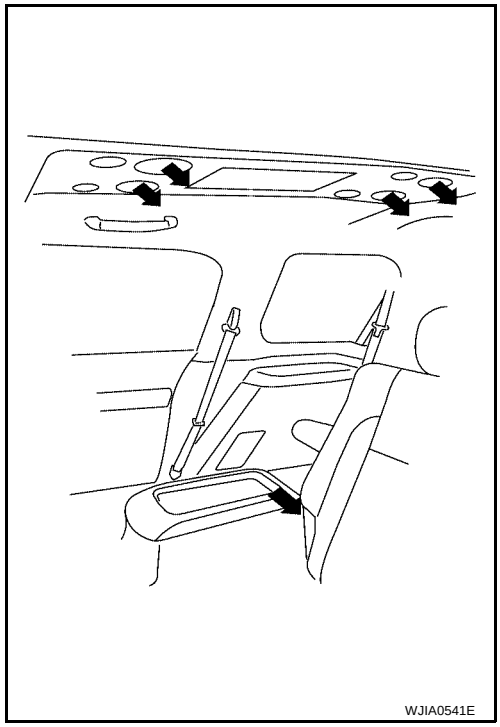

Discharge air flow

Mode door position	Air outlet/distribution	
	Vent	Foot
	100%	–
	50%	50%
	–	100%

( ): Manually control

WJIA0621E

System Description (Front)

EJS001V2

SWITCHES AND THEIR CONTROL FUNCTION

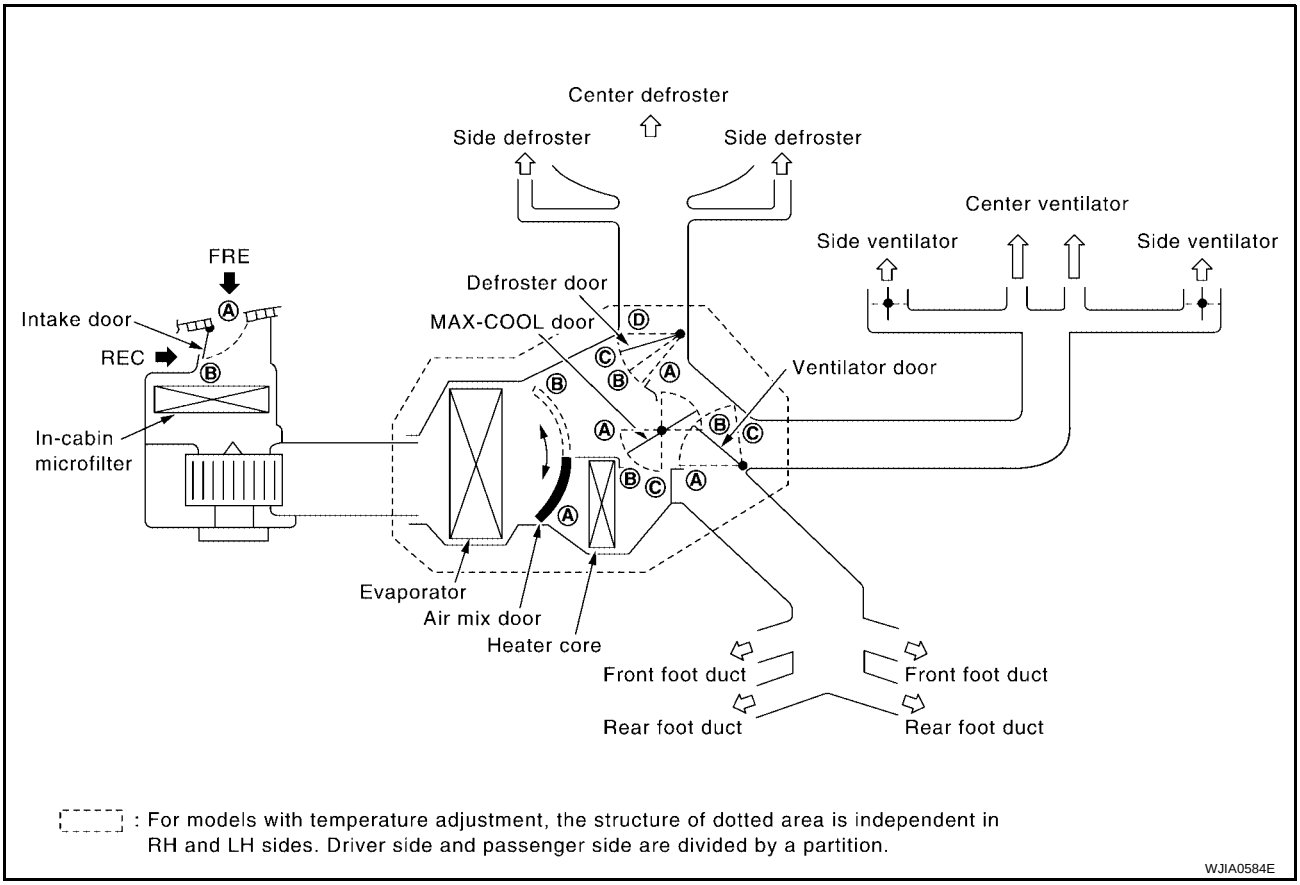

Position or switch / Door	MODE SW				DEF SW		REC SW		Temperature switch			OFF SW
	VENT	B/L	FOOT	D/F	ON	OFF	ON	OFF				
					FRONT				A/C			OFF
					☀	○	☀	○	COLD	~	HOT	
Ventilator door	Ⓐ	Ⓑ	Ⓒ	Ⓒ	Ⓒ	—	—		—			Ⓒ
MAX-COOL door	Ⓐ	Ⓑ	Ⓑ	Ⓑ	Ⓒ		—		—			Ⓑ
Defroster door	Ⓓ	Ⓓ	Ⓓ or Ⓒ	Ⓑ	Ⓐ		—		—			Ⓒ
Intake door	—				Ⓑ		Ⓐ	Ⓑ	—			Ⓑ
Air mix door	—				—		—		Ⓐ		Ⓑ	—

WJIA0532E

System Description (Rear)

EJS0026X

SWITCHES AND THEIR CONTROL FUNCTION

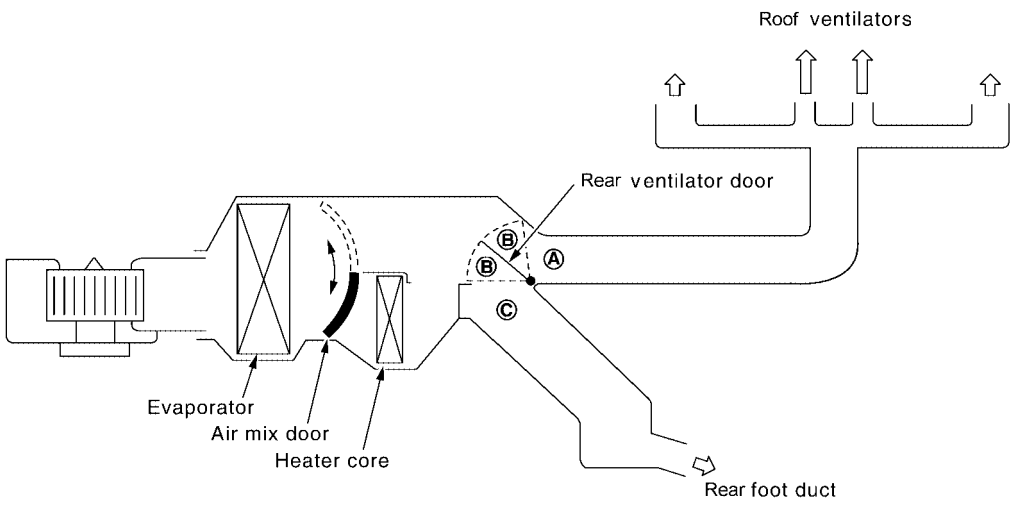

WJIA0623E

Position or switch / Door	MODE SW			TEMP SW			OFF SW
	VENT	B/L	FOOT	COLD	~	HOT	OFF
Mode door	Ⓐ	Ⓑ	Ⓒ	—			Ⓒ
Air mix door	—			Ⓐ		Ⓑ	—

WJIA0624E

CAN Communication System Description

EJS001V3

Refer to LAN-5, "CAN COMMUNICATION" .

TROUBLE DIAGNOSIS

PFP:00004

CONSULT-II

EJS001V4

CONSULT-II can display each diagnostic item using the diagnostic test modes shown following.

System part	Check item, diagnosis mode	Description
BCM	Data monitor	Displays BCM input data in real time.

CONSULT-II BASIC OPERATION

CAUTION:

If CONSULT-II is used with no connection of CONSULT-II CONVERTER, malfunctions might be detected in self-diagnosis depending on control unit which carry out CAN communication.

1. With the ignition switch OFF, connect CONSULT-II and “CONSULT-II converter” to the data link connector, and turn the ignition switch ON.

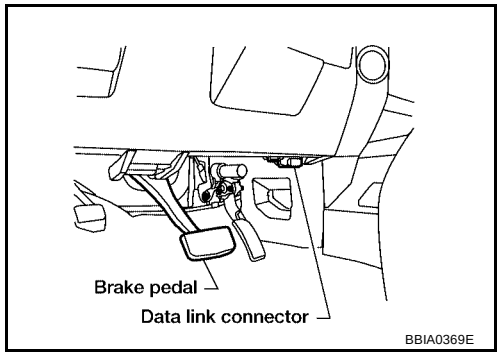

2. Touch “START (NISSAN BASED VHCL)”.

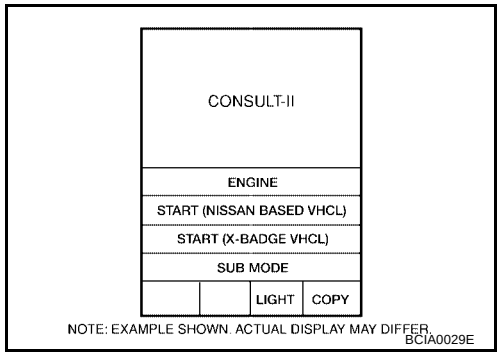

3. Touch “BCM” on “SELECT SYSTEM” screen. If “BCM” is not indicated, go to GI-38, "CONSULT-II Data Link Connector (DLC) Circuit" .

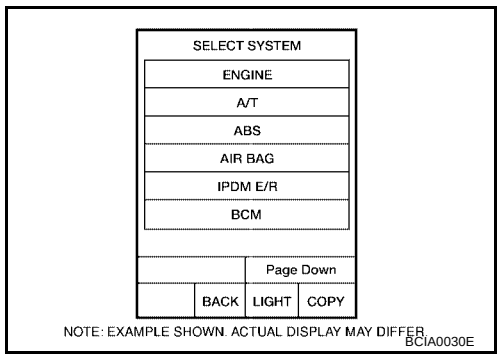

DATA MONITOR

Operation Procedure

1. Touch “AIR CONDITIONER” on “SELECT TEST ITEM” screen.

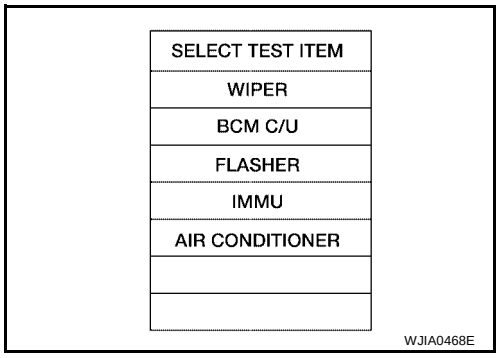

2. Touch “DATA MONITOR” on “SELECT DIAG MODE” screen.

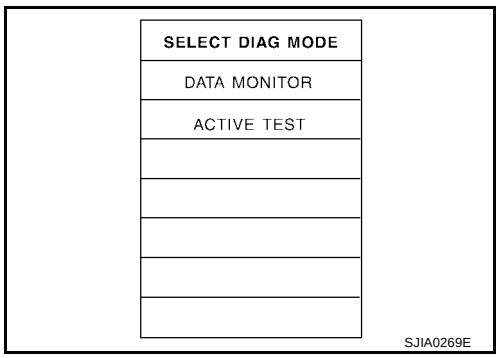

3. Touch either “ALL SIGNALS” or “SELECTION FROM MENU” on “DATA MONITOR” screen.

All signals	Monitors all the items.
Selection from menu	Selects and monitors the individual item selected.

4. Touch “START”.
5. When “SELECTION FROM MENU” is selected, touch items to be monitored. When “ALL SIGNALS” is selected, all the items will be monitored.
6. Touch “RECORD” while monitoring, then the status of the monitored item can be recorded. To stop recording, touch “STOP”.

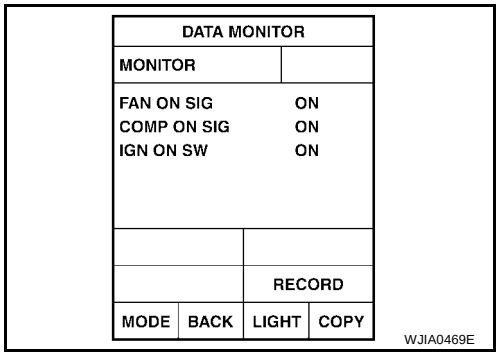

Display Item List

Monitor item name “operation or unit”		Contents
IGN ON SW	“ON/OFF”	Displays “IGN Position (ON)/OFF, ACC Position (OFF)” status as judged from ignition switch signal.
COMP ON SIG	“ON/OFF”	Displays “COMP (ON)/COMP (OFF)” status as judged from air conditioner switch signal.
FAN ON SIG	“ON/OFF”	Displays “FAN (ON)/FAN (OFF)” status as judged from blower motor switch signal.

How to Perform Trouble Diagnosis for Quick and Accurate Repair

EJS001V5

WORK FLOW

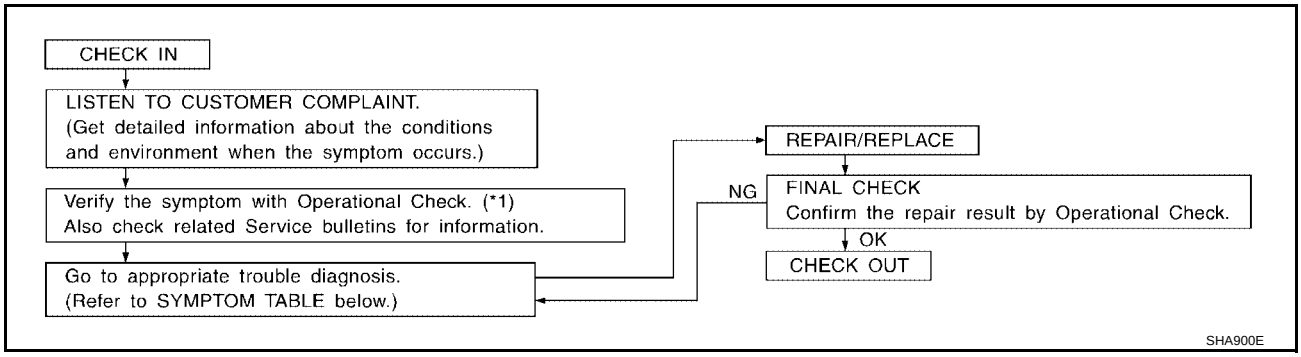

*1 ATC-55, "Operational Check (Front)" or ATC-58, "Operational Check (Rear)" .

SYMPTOM TABLE

Symptom	Reference Page	
A/C system does not come on.	Go to Trouble Diagnosis Procedure for A/C System.	ATC-59, "Power Supply and Ground Circuit for Front Air Control"
A/C system display is malfunctioning.	Go to "Navigation System".	AV-78, "NAVIGATION SYSTEM"
A/C system cannot be controlled.	Go to Self-diagnosis Function.	ATC-53, "A/C System Self-diagnosis Function"
Air outlet does not change.	Go to Trouble Diagnosis Procedure for Mode Door Motor.	ATC-62, "Mode Door Motor Circuit"
Mode door motor is malfunctioning.		
Discharge air temperature does not change.	Go to Trouble Diagnosis Procedure for Air Mix Door Motor.	ATC-66, "Air Mix Door Motor Circuit"
Air mix door motor is malfunctioning.		
Intake door does not change.	Go to Trouble Diagnosis Procedure for Intake Door Motor.	ATC-74, "Intake Door Motor Circuit"
Intake door motor is malfunctioning.		
Defroster door motor is malfunctioning.	Go to Trouble Diagnosis Procedure for Defroster Door Motor.	ATC-77, "Defroster Door Motor Circuit"
Front blower motor operation is malfunctioning.	Go to Trouble Diagnosis Procedure for Front Blower Motor.	ATC-81, "Front Blower Motor Circuit"
Rear blower motor operation is malfunctioning.	Go to3 Trouble Diagnosis Procedure for Rear Blower Motor.	ATC-88, "Rear Blower Motor Circuit"
Rear discharge air temperature and/or air outlet does not change.	Go to Trouble Diagnosis Procedure for Rear Air Control circuit.	ATC-99, "Rear Air Control Circuit"
Magnet clutch does not engage.	Go to Trouble Diagnosis Procedure for Magnet Clutch.	ATC-102, "Magnet Clutch Circuit"
Insufficient cooling	Go to Trouble Diagnosis Procedure for Insufficient Cooling.	ATC-108, "Insufficient Cooling"
Insufficient heating	Go to Trouble Diagnosis Procedure for Insufficient Heating.	ATC-115, "Insufficient Heating"
Noise	Go to Trouble Diagnosis Procedure for Noise.	ATC-116, "Noise"

Symptom	Reference Page	
Self-diagnosis cannot be performed.	Go to Trouble Diagnosis Procedure for Self-diagnosis.	ATC-118, "Self-diagnosis"
Memory function does not operate.	Go to Trouble Diagnosis Procedure for Memory Function.	ATC-119, "Memory Function"

Component Parts and Harness Connector Location

EJS001V6

ENGINE COMPARTMENT

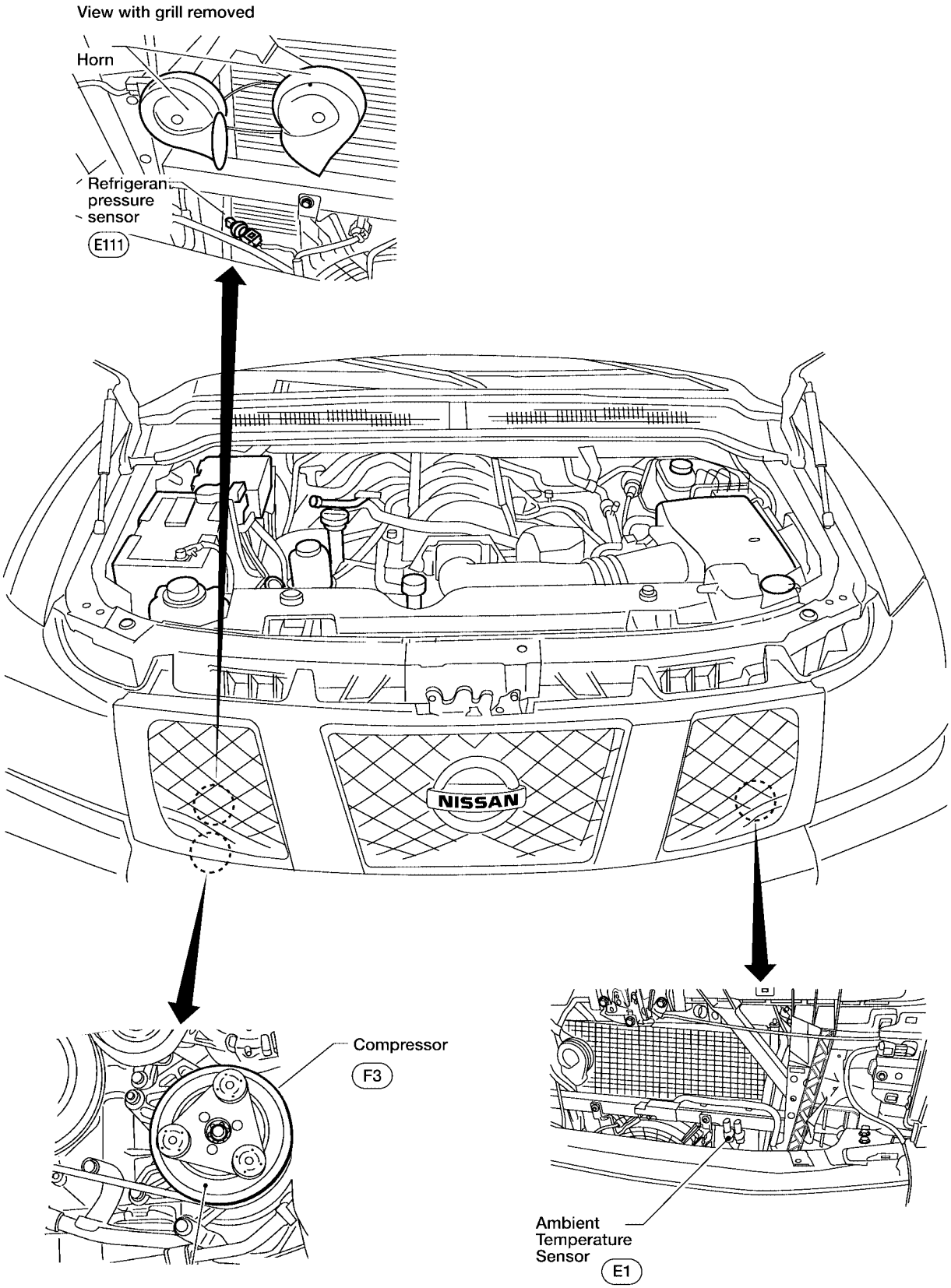

FRONT PASSENGER COMPARTMENT

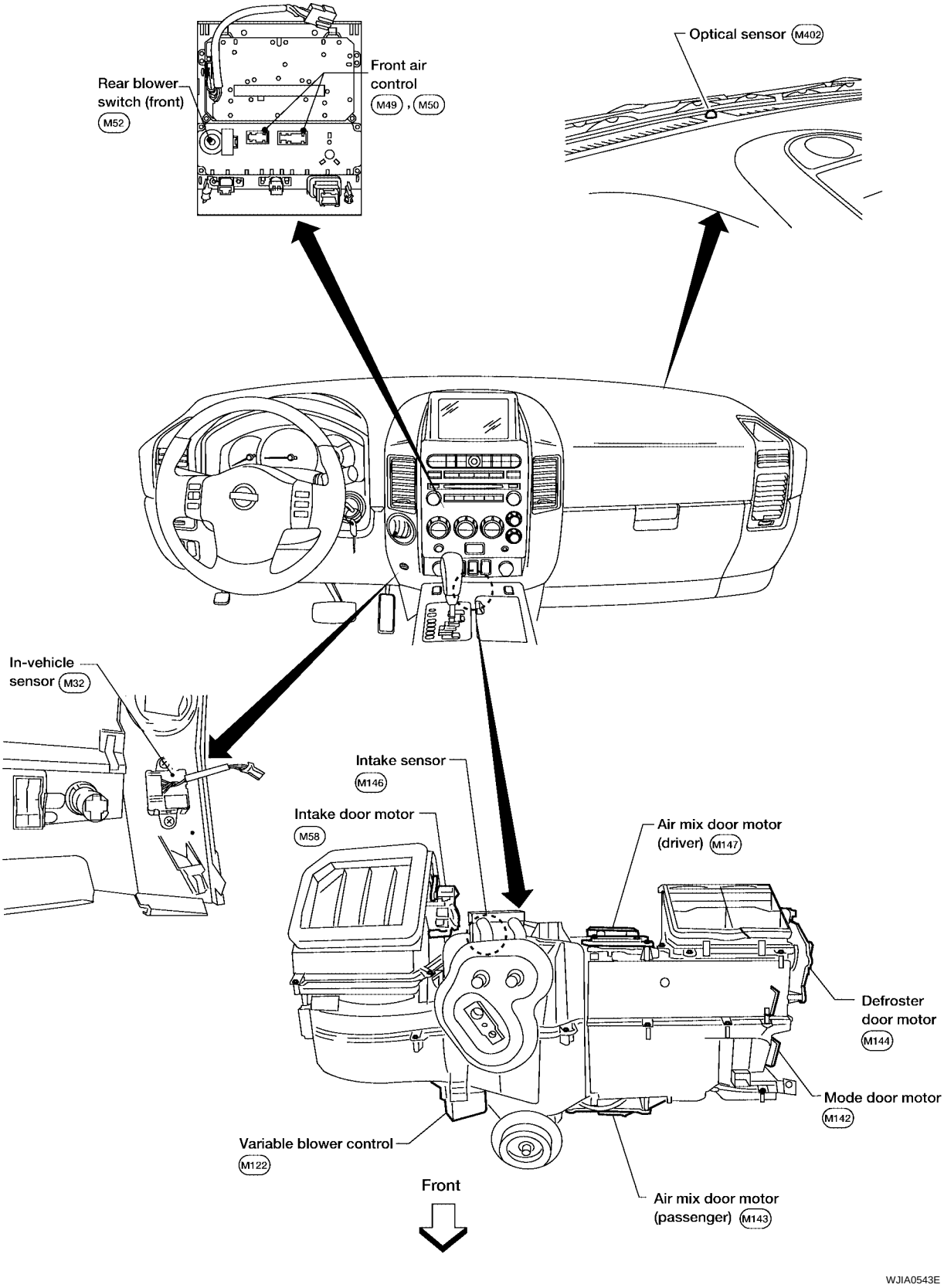

REAR PASSENGER COMPARTMENT

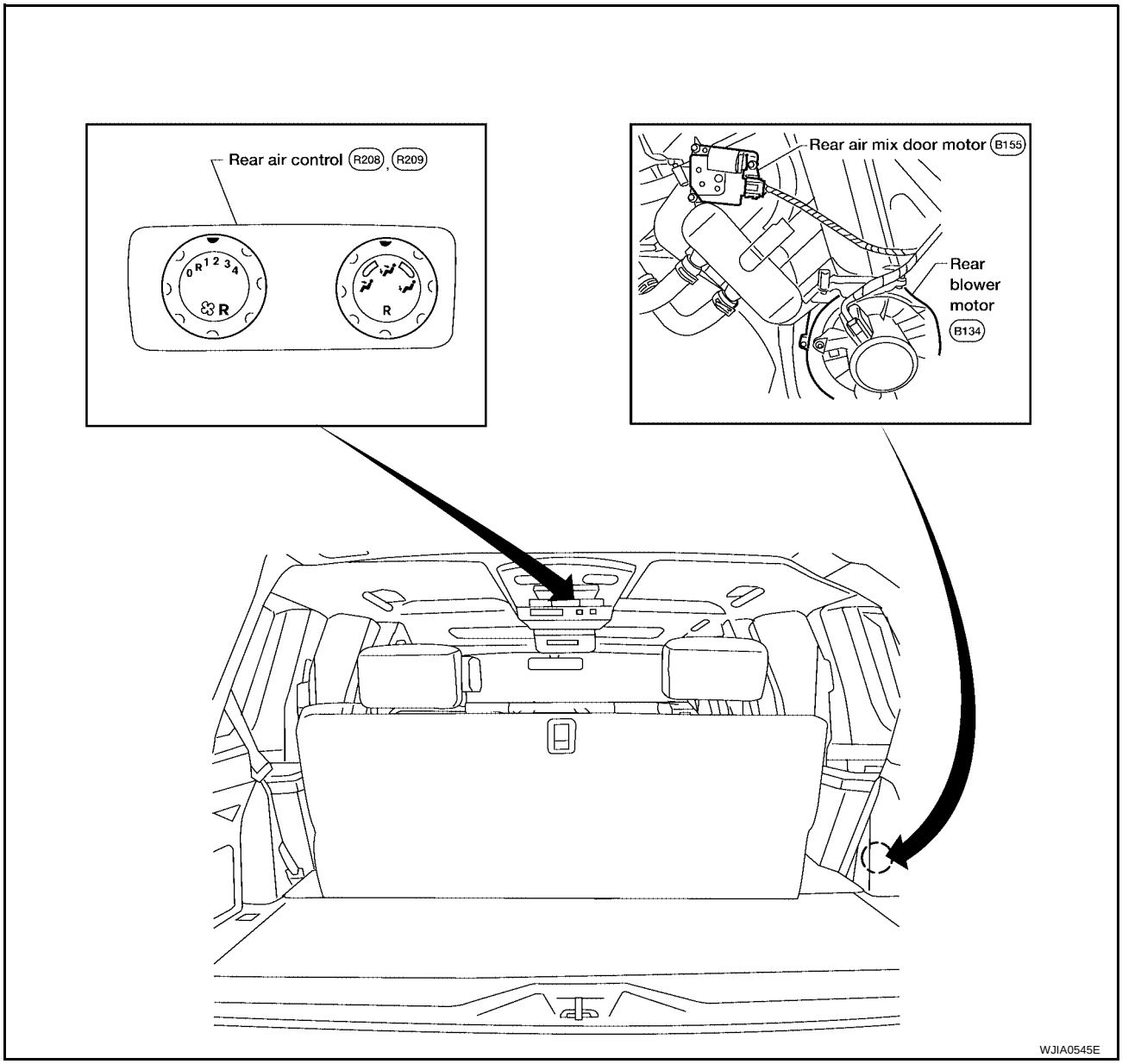

Schematic

EJS001V7

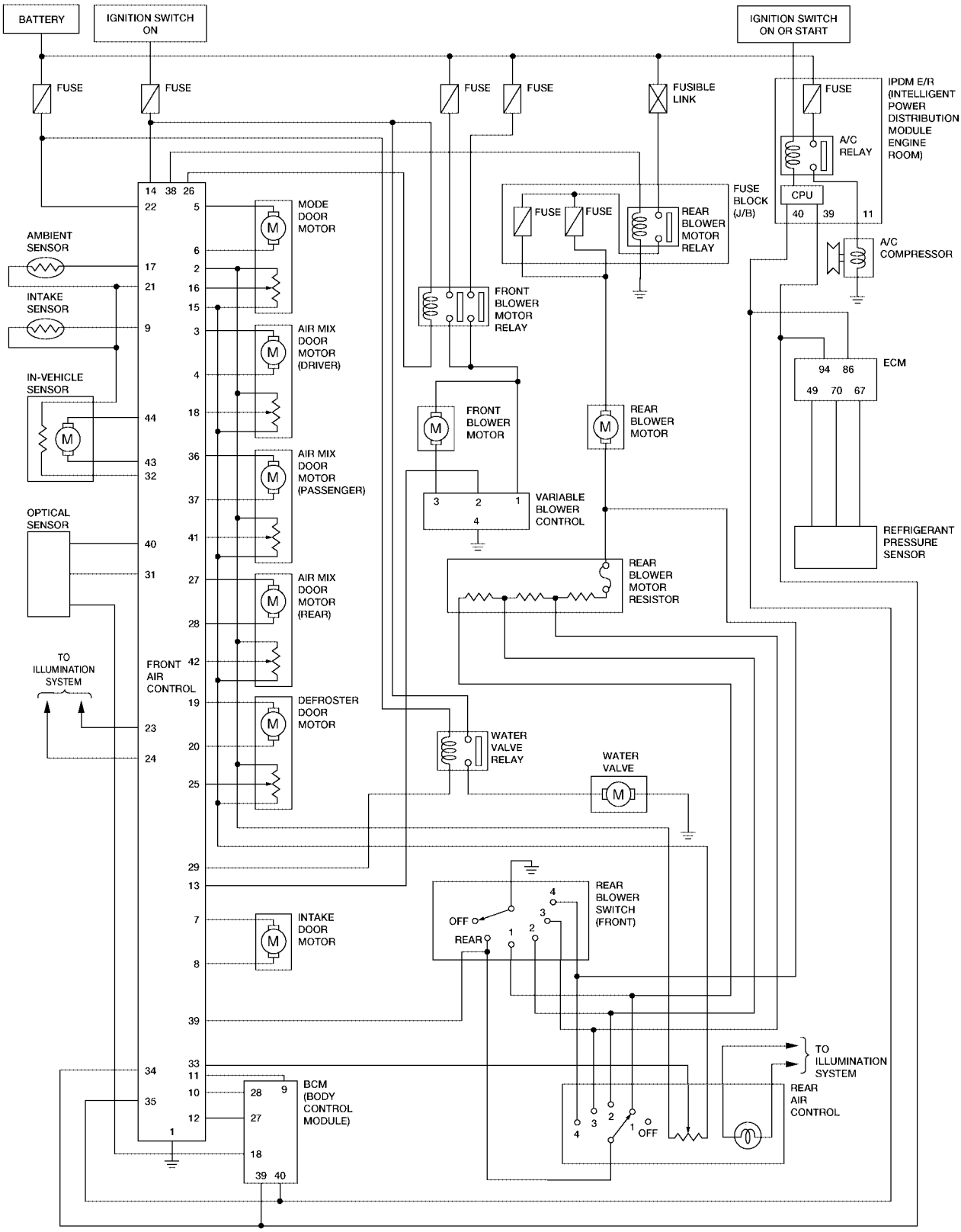

WJWA0117E

Wiring Diagram —A/C—

EJS001V8

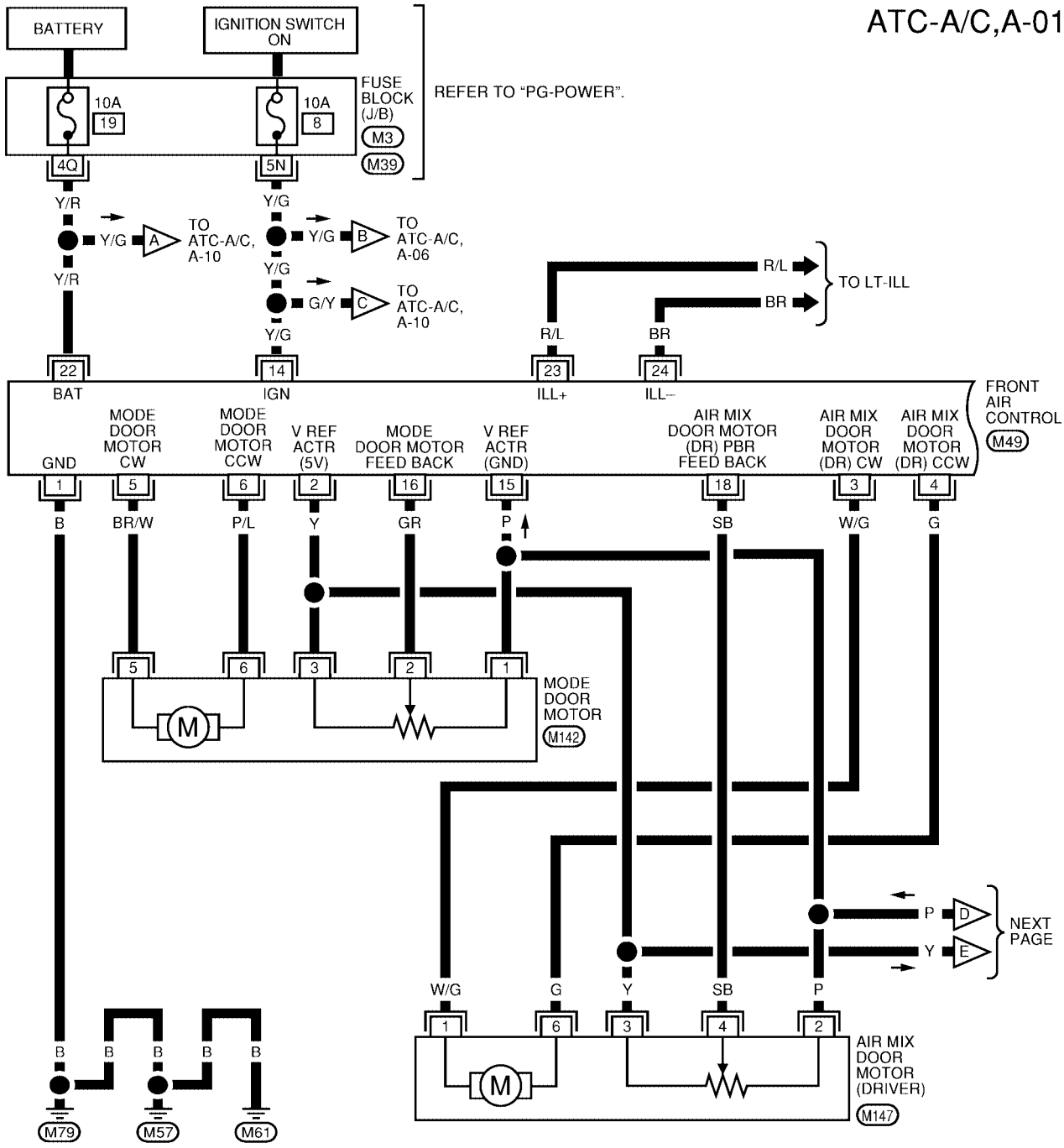

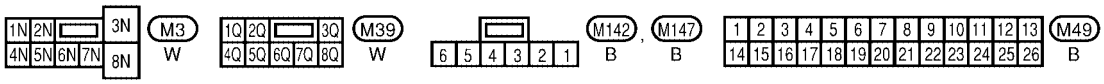

WJWA0118E

ATC-A/C,A-02

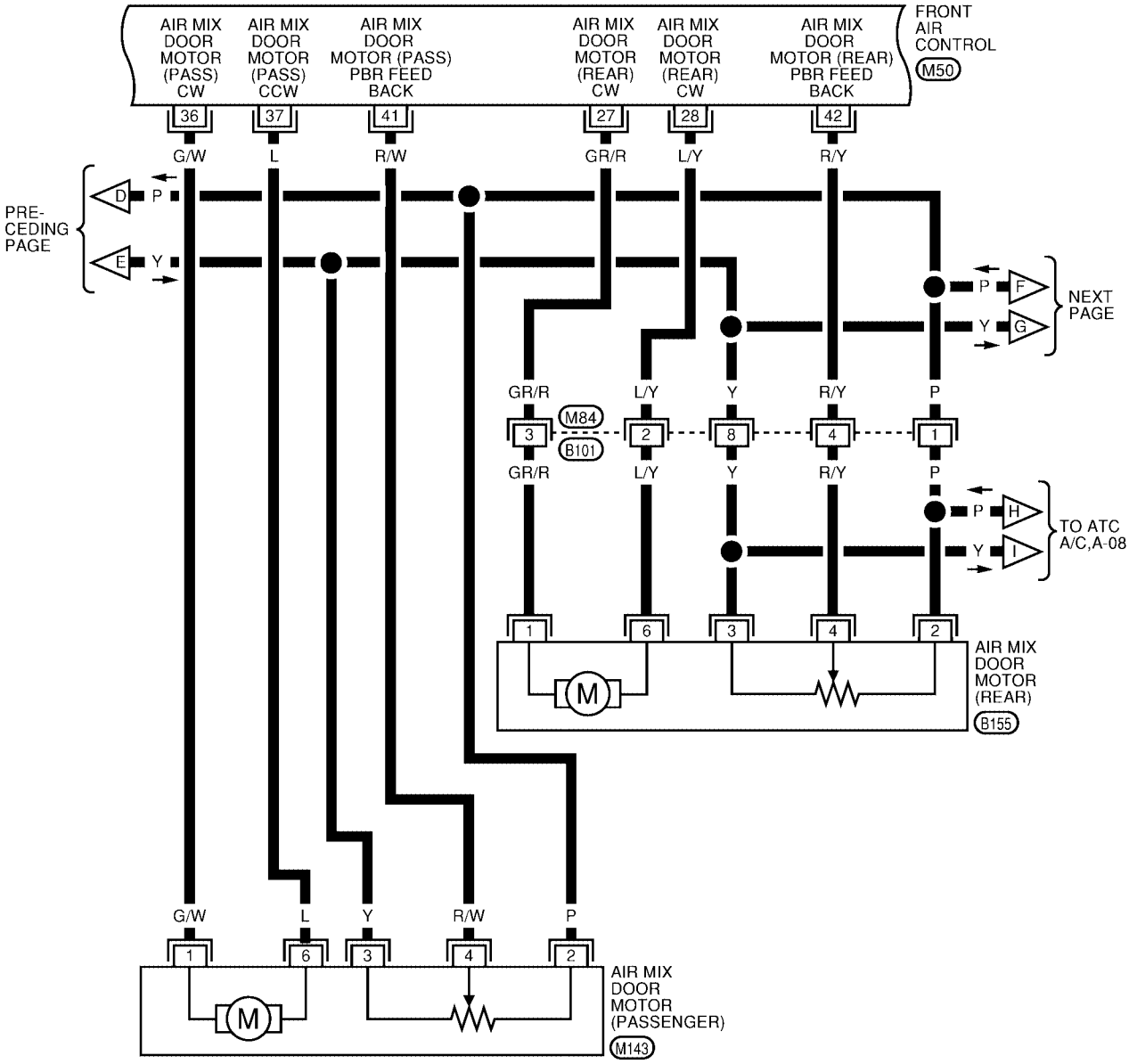

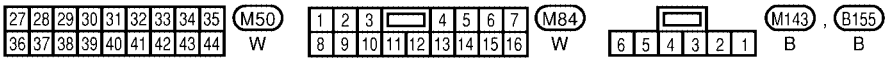

WJWA0119E

ATC-A/C,A-03

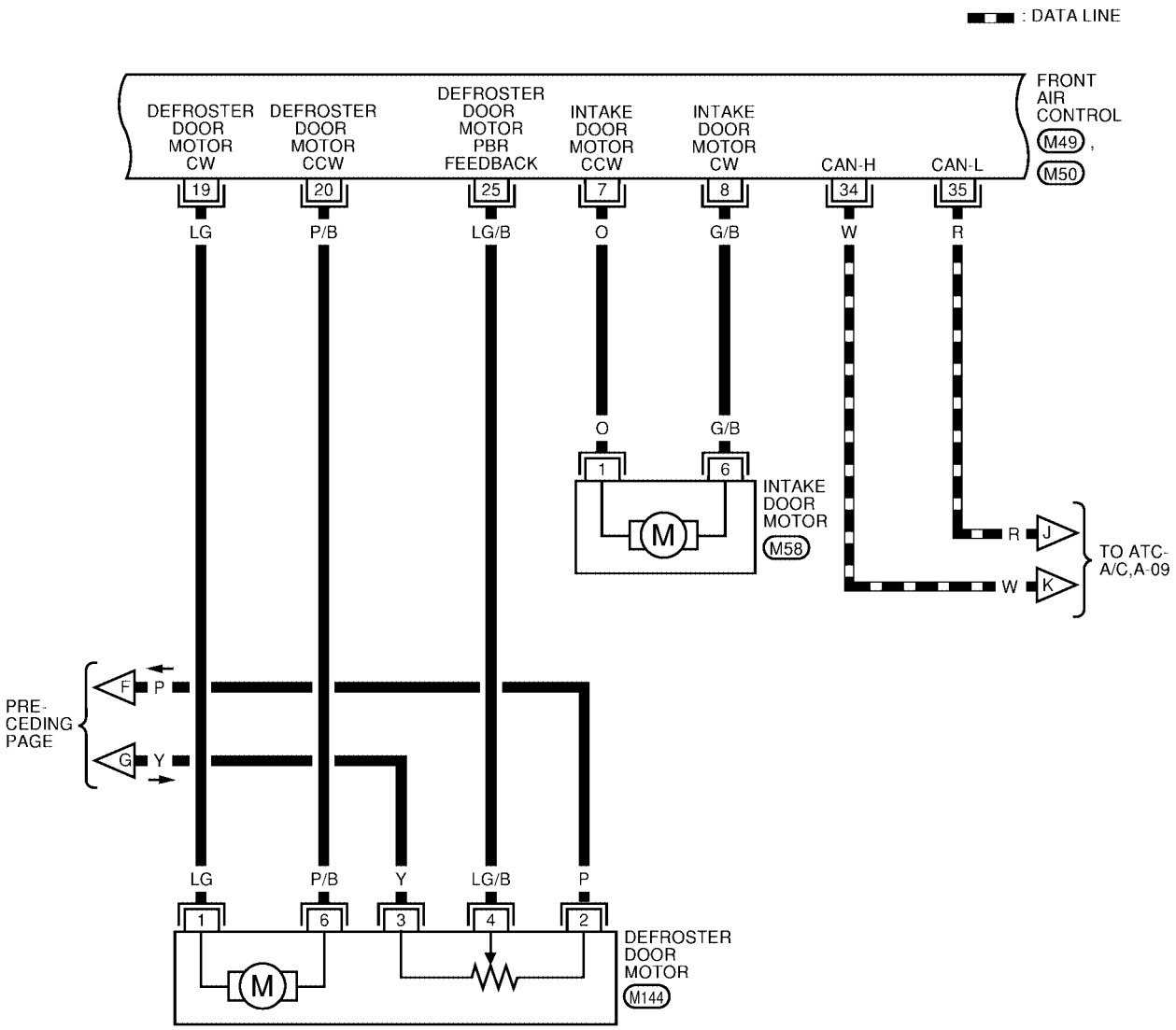

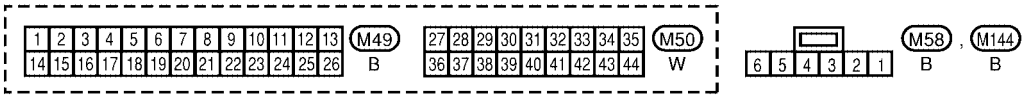

WJWA0120E

ATC-A/C,A-04

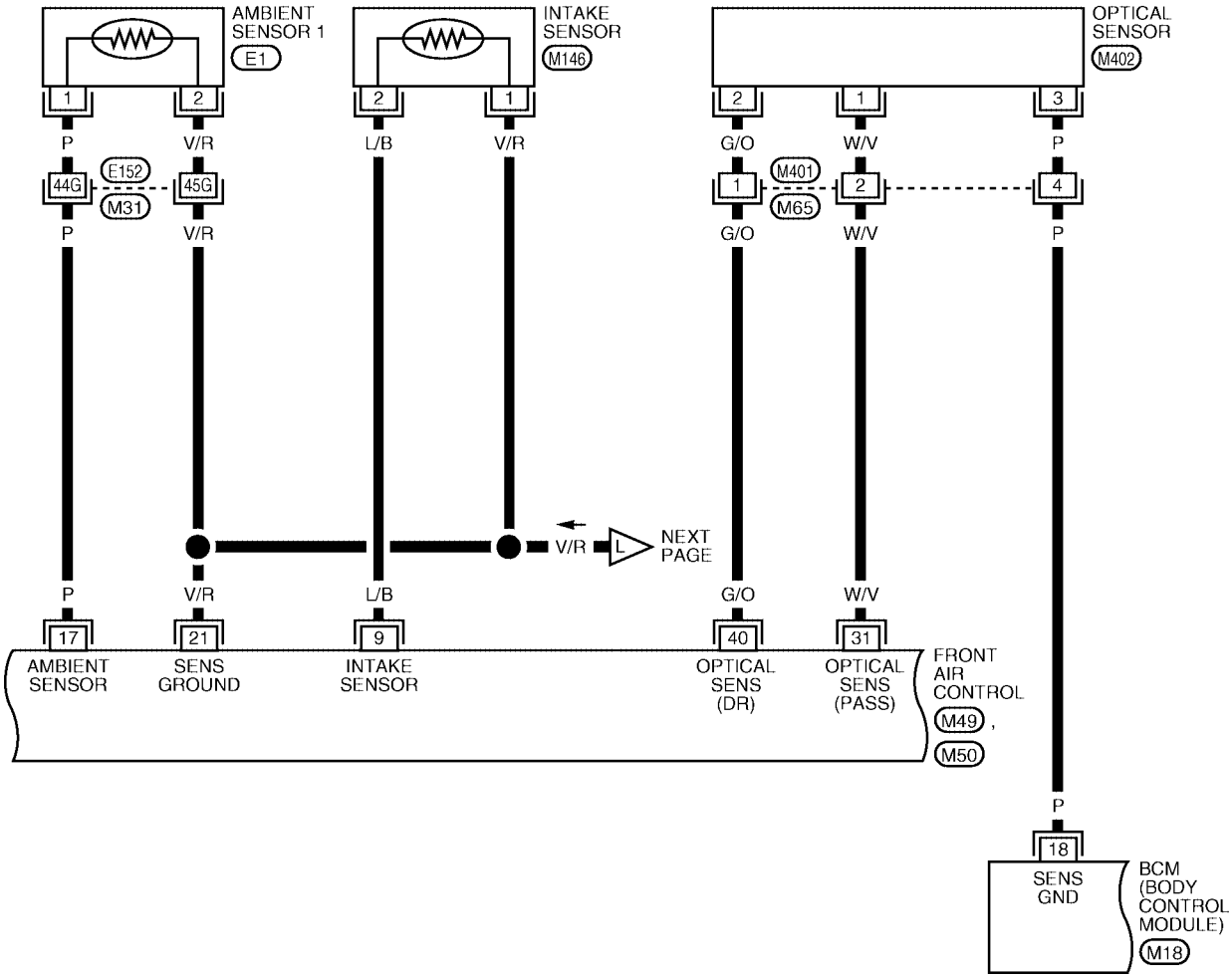

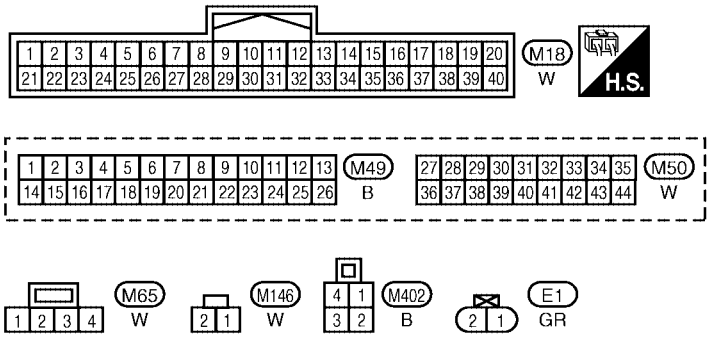

REFER TO THE FOLLOWING.
M31 - SUPER MULTIPLE JUNCTION (SMJ)

WJWA0121E

ATC-A/C,A-05

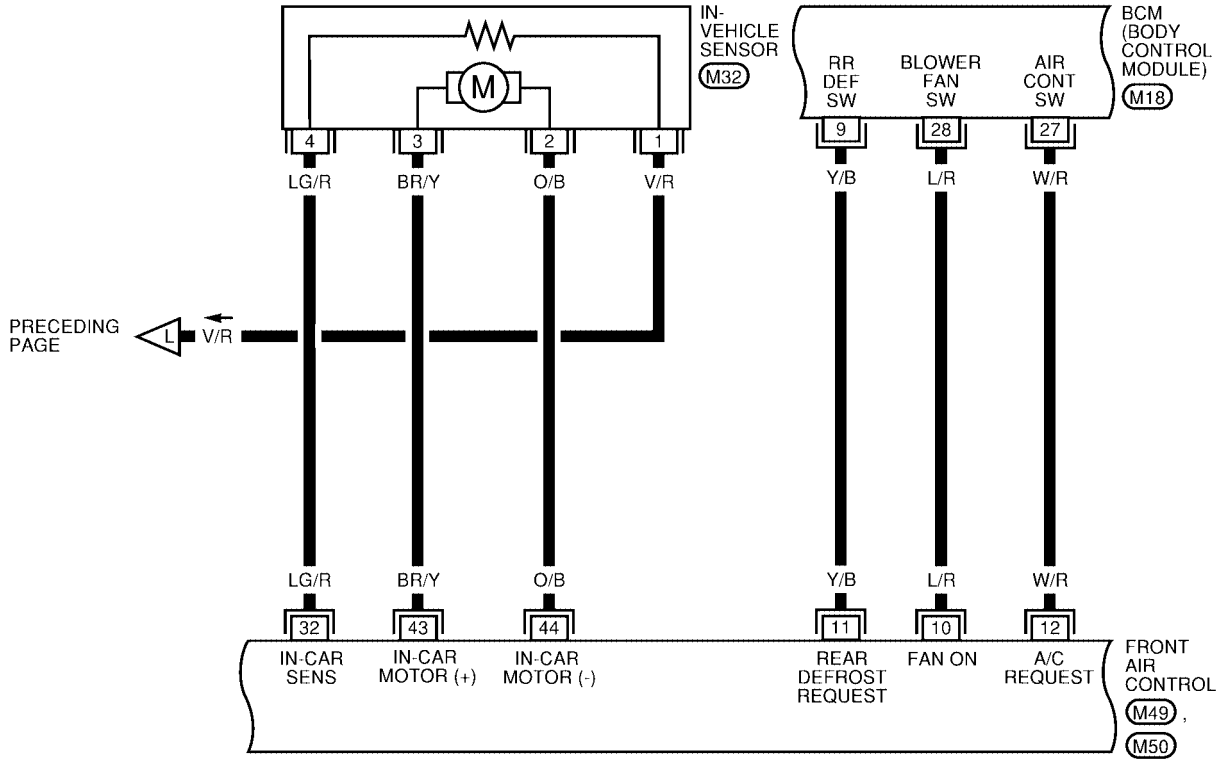

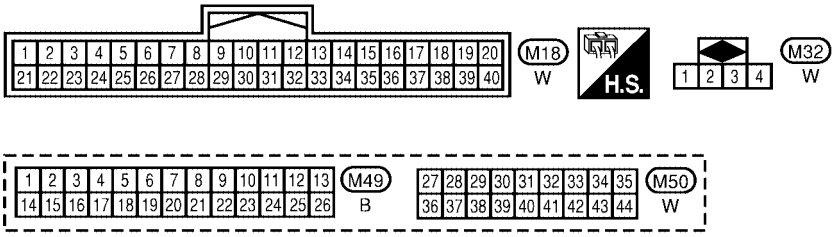

WJWA0122E

ATC-A/C,A-06

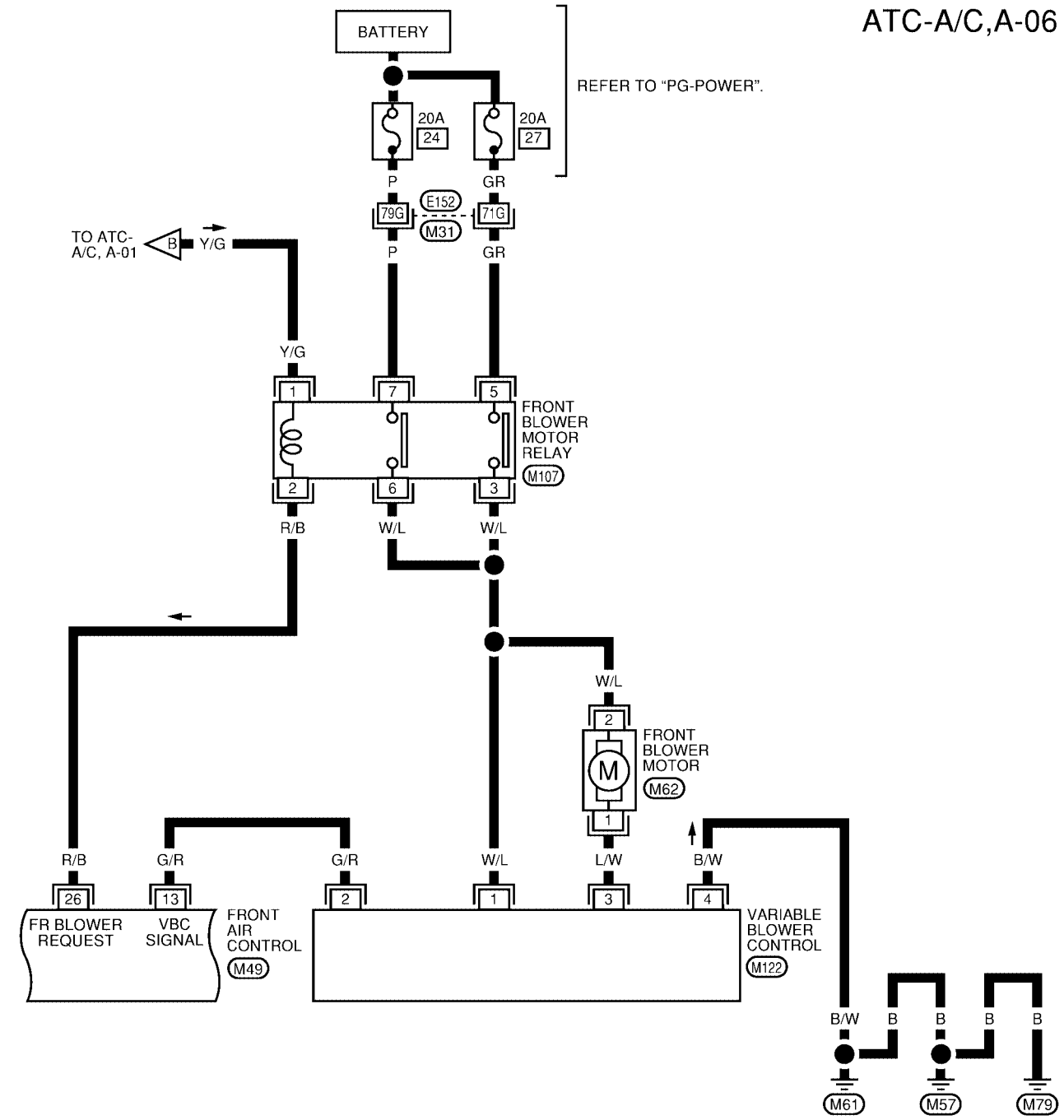

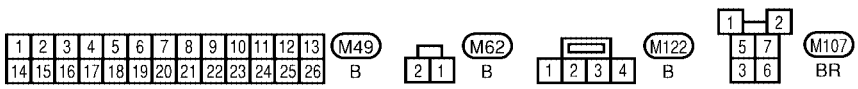

REFER TO THE FOLLOWING.
M31 - SUPER MULTIPLE JUNCTION (SMJ)

WJWA0123E

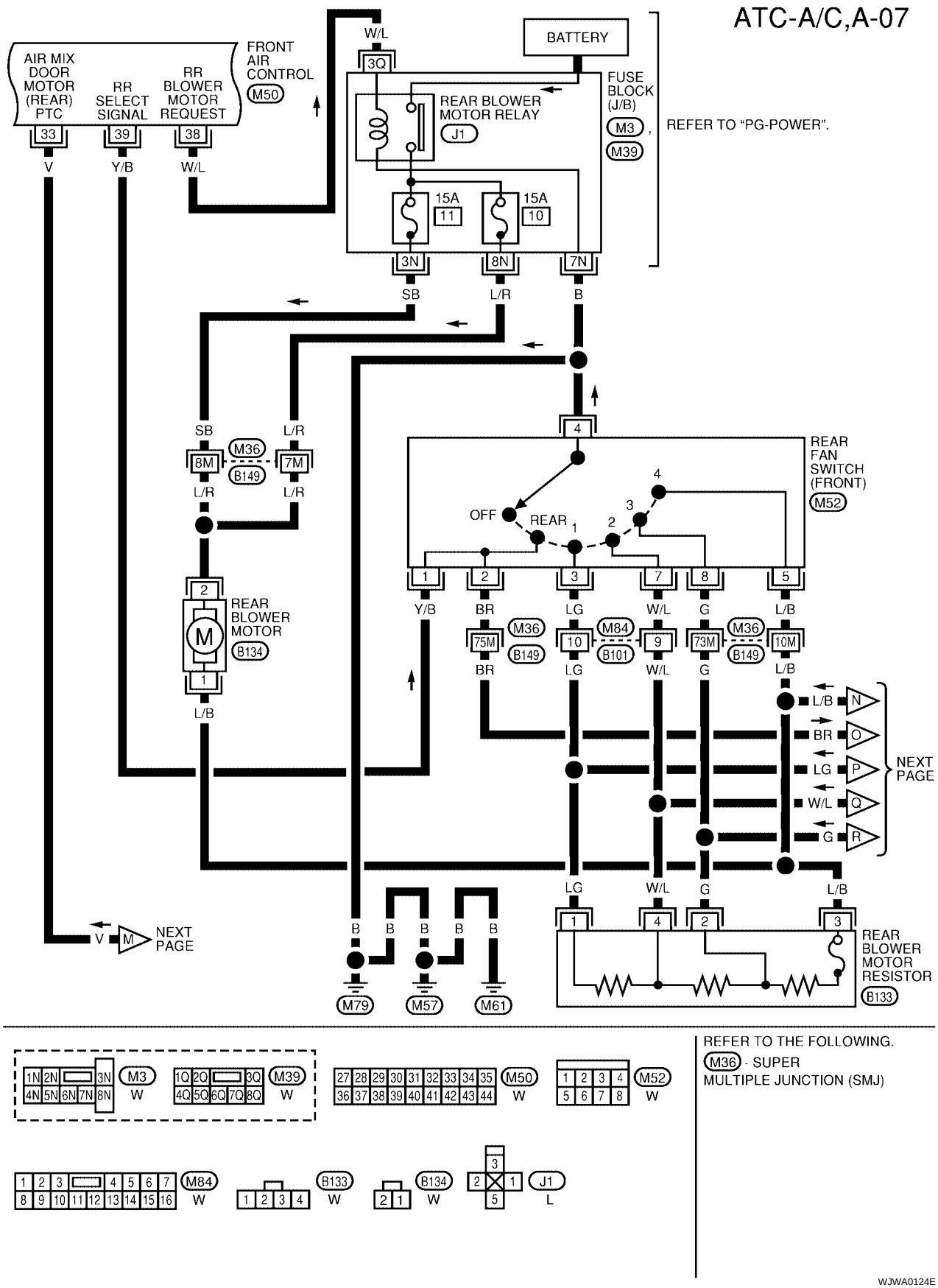
ATC-A/C,A-07
AIR MIX DOOR MOTOR (REAR) PTC
RR SELECT SIGNAL
RR BLOWER MOTOR REQUEST
FRONT AIR CONTROL
M50
33
39
38
V
Y/B
W/L
W/L
3Q
BATTERY
FUSE BLOCK (J/B)
M3
M39
REFER TO "PG-POWER".
REAR BLOWER MOTOR RELAY
J1
15A
11
15A
10
3N
8N
7N
SB
L/R
B
SB
L/R
M36
8M
7M
B149
L/R
L/R
4
REAR FAN SWITCH (FRONT)
M52
OFF
REAR
1
2
3
4
1
2
3
7
8
5
Y/B
BR
LG
W/L
G
L/B
M36
75M
B149
M84
10
B101
9
73M
M36
B149
10M
BR
LG
W/L
G
L/B
2
REAR BLOWER MOTOR
M
B134
1
L/B
L/B
N
BR
O
LG
P
W/L
Q
G
R
NEXT PAGE
LG
W/L
G
L/B
1
4
2
3
REAR BLOWER MOTOR RESISTOR
B133
V
M
NEXT PAGE
B
B
B
B
B
M79
M57
M61
1N 2N 3N 4N 5N 6N 7N 8N
M3
W
1Q 2Q 3Q 4Q 5Q 6Q 7Q 8Q
M39
W
27 28 29 30 31 32 33 34 35 36 37 38 39 40 41 42 43 44
M50
W
1 2 3 4 5 6 7 8
M52
W
1 2 3 4 5 6 7 8 9 10 11 12 13 14 15 16
M84
W
1 2 3 4
B133
W
2 1
B134
W
3 2 1 5
J1
L
REFER TO THE FOLLOWING.
M36 - SUPER MULTIPLE JUNCTION (SMJ)
WJWA0124E

ATC-A/C,A-08

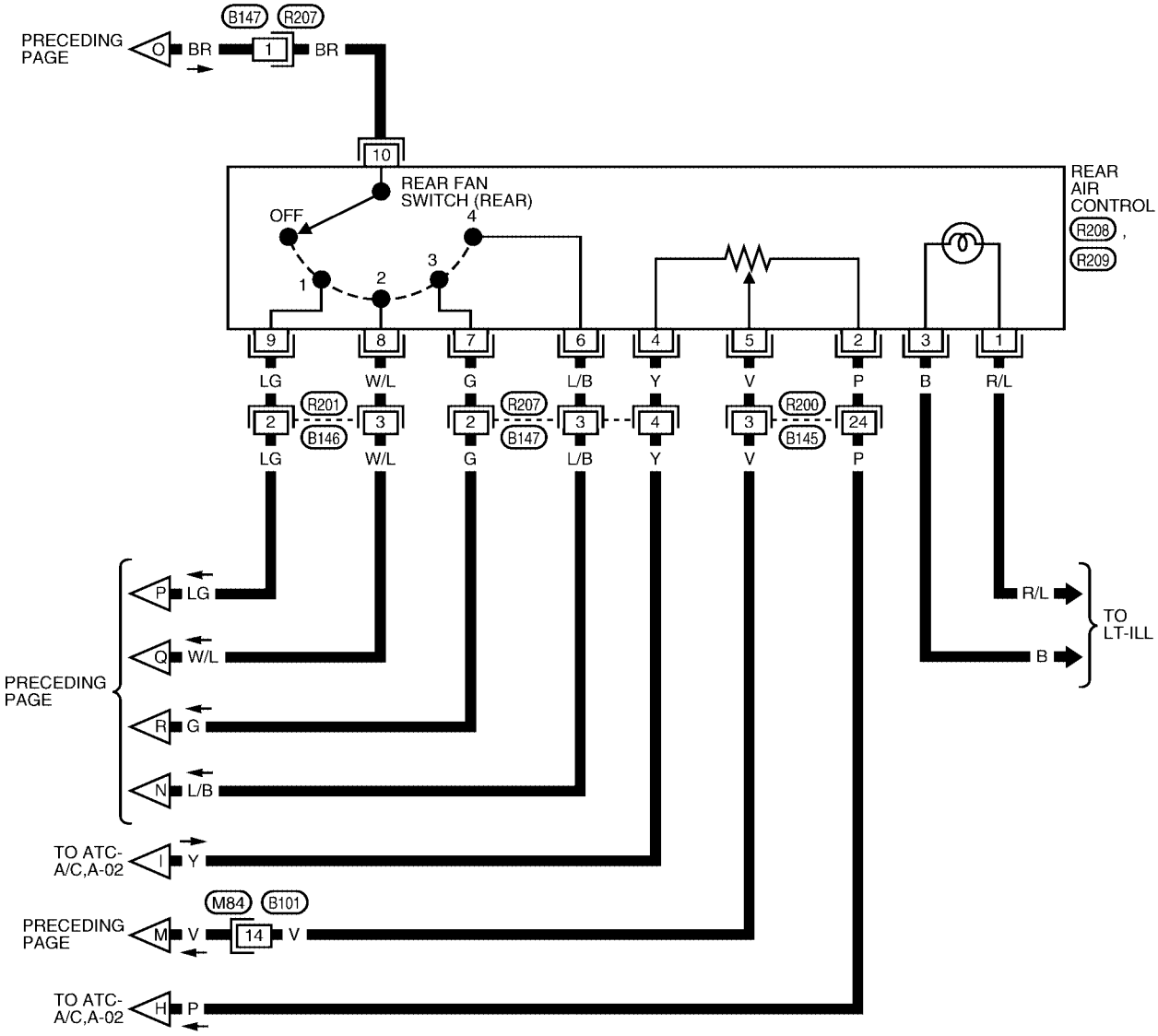

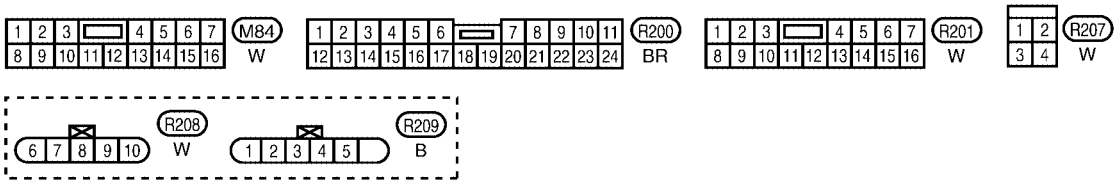

WJWA0125E

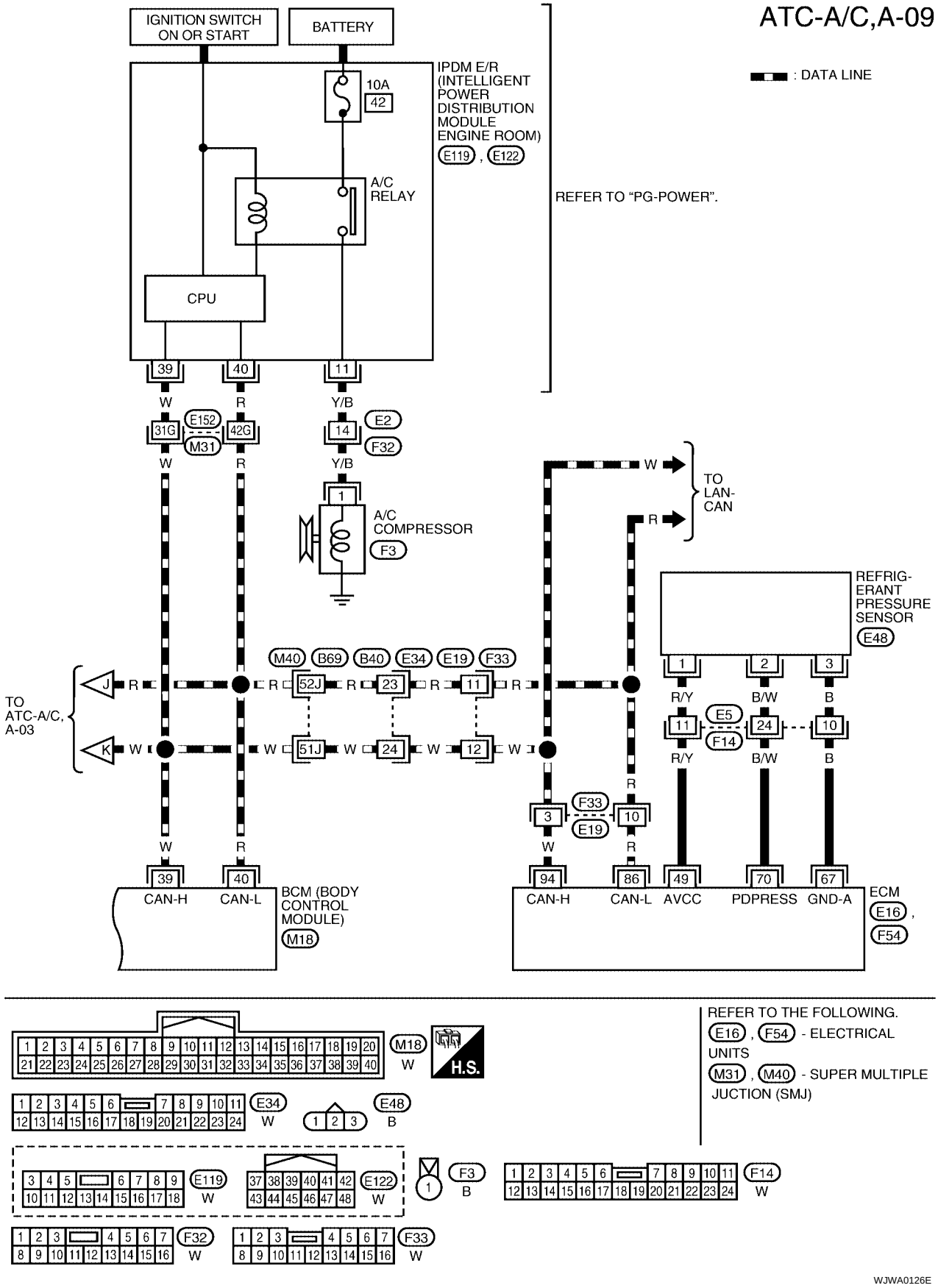
ATC-A/C,A-09
: DATA LINE
IGNITION SWITCH ON OR START
BATTERY
IPDM E/R (INTELLIGENT POWER DISTRIBUTION MODULE ENGINE ROOM)
E119 , E122
10A
42
A/C RELAY
CPU
REFER TO "PG-POWER".
39
40
11
W
R
Y/B
31G
E152
M31
42G
14
E2
F32
A/C COMPRESSOR
F3
TO LAN-CAN
REFRIG-ERANT PRESSURE SENSOR
E48
M40
B69
B40
E34
E19
F33
52J
23
51J
24
12
TO ATC-A/C, A-03
J
K
R/Y
B/W
B
E5
F14
CAN-H
CAN-L
BCM (BODY CONTROL MODULE)
M18
AVCC
PDPRESS
GND-A
ECM
E16 , F54
REFER TO THE FOLLOWING.
E16 , F54 - ELECTRICAL UNITS
M31 , M40 - SUPER MULTIPLE JUCTION (SMJ)
H.S.
E119
E122
F14
F32
F33
WJWA0126E

ATC-A/C,A-10

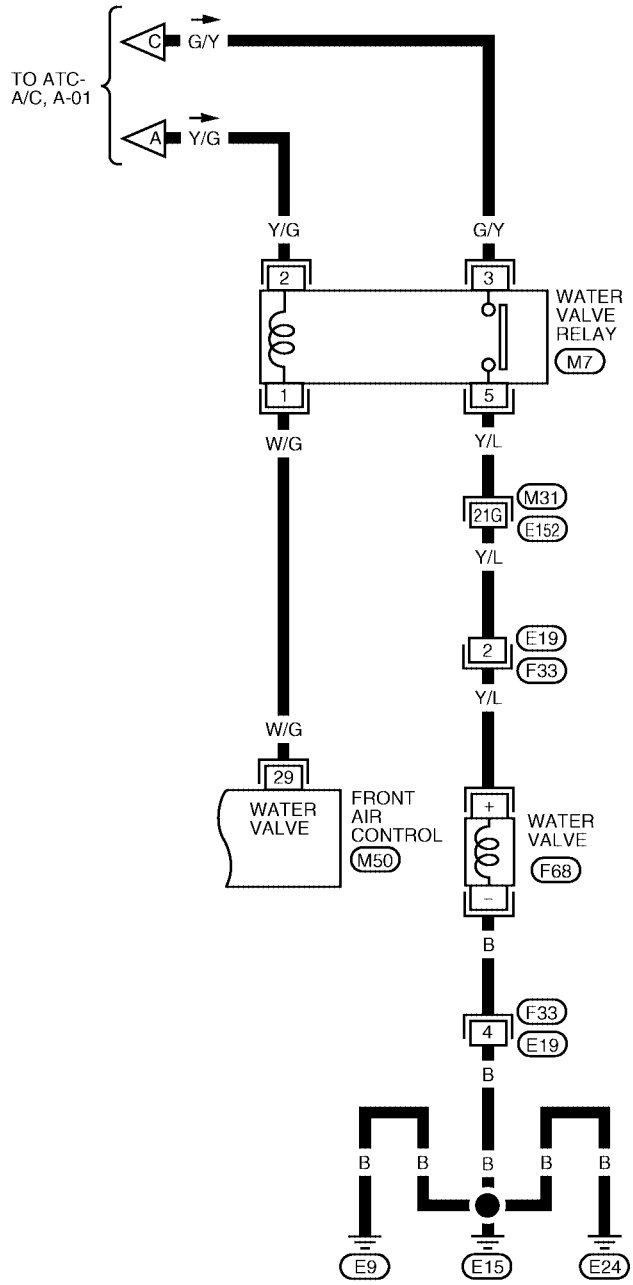

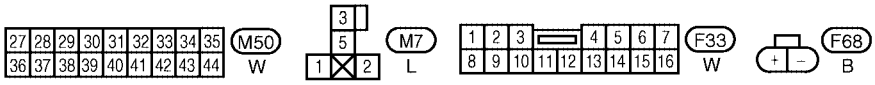

REFER TO THE FOLLOWING.
M31 - SUPER MULTIPLE JUNCTION (SMJ)

WJWA0136E

Front Air Control Terminals and Reference Value

EJS001V9

Measure voltage between each terminal and ground by following Terminals and Reference Value for front air control.

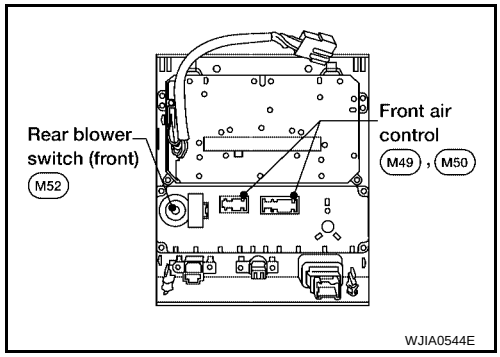

PIN CONNECTOR TERMINAL LAYOUT

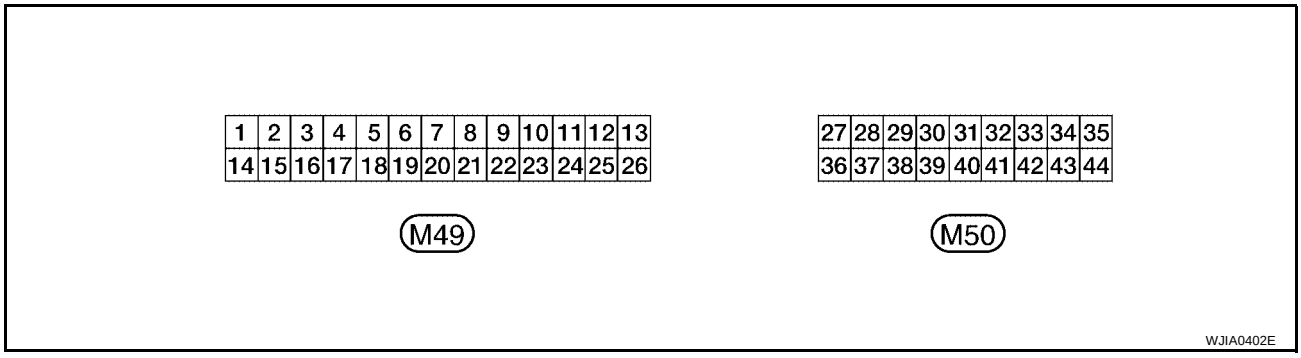

TERMINALS AND REFERENCE VALUE FOR FRONT AIR CONTROL

Terminal No.	Wire color	Item	Ignition switch	Condition	Voltage (V) (Approx.)
1	B	Ground	-	-	0V
2	Y	Sensor power	ON	-	5V
3	W/G	Air mix door motor (Driver) CW	ON	Clockwise rotation	Battery voltage
4	G	Air mix door motor (Driver) CCW	ON	Counterclockwise rotation	Battery voltage
5	BR/W	Mode door motor CW	ON	Clockwise rotation	Battery voltage
6	P/L	Mode door motor CCW	ON	Counterclockwise rotation	Battery voltage
7	G/B	Intake door motor CW	ON	Clockwise rotation	Battery voltage
8	O	Intake door motor CCW	ON	Counterclockwise rotation	Battery voltage
9	L/R	Intake sensor	ON	-	0 - 5V
10	L/R	Fan ON signal	ON	Blower switch OFF	5V
			ON	Blower switch ON	0V
11	Y/B	Rear defroster request	ON	-	Battery voltage
12	W	Compressor ON signal	ON	A/C switch OFF	5V
			ON	A/C switch ON	0V
13	G/R	Variable blower control	ON	-	0 - 5V
14	Y/G	Power supply for IGN	ON	-	Battery voltage
15	P	Sensor ground	ON	-	0V
16	GR	Mode door motor feedback	ON	-	0 - 5V
17	P	Ambient sensor	ON	-	0 - 5V
18	SB	Air mix door motor (Driver) feedback	ON	-	0 - 5V
19	LG	Defroster door motor CW	ON	Clockwise rotation	Battery voltage
20	P/L	Defroster door motor CCW	ON	Counterclockwise rotation	Battery voltage
21	V/R	Sensor return	ON	-	0 - 5V

Terminal No.	Wire color	Item	Ignition switch	Condition	Voltage (V) (Approx.)
22	Y/R	Power supply for BAT	-	-	Battery voltage
23	R/L	Illumination +	ON	Park lamps ON	Battery voltage
24	BR	Illumination -	-	Park lamps ON	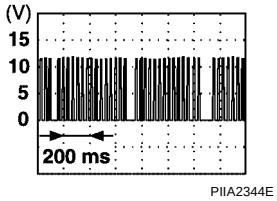
25	LG/B	Defroster door motor feedback	ON	-	0 - 5V
26	R/B	Front blower request	ON	Front blower motor OFF	Battery voltage
				Front blower motor ON	0V
27	GR/R	Air mix door motor (Rear) CW	ON	Clockwise rotation	Battery voltage
28	L/Y	Air mix door motor (Rear) CCW	ON	Counterclockwise rotation	Battery voltage
29	W/G	Water valve	ON	Water valve open	0V
				Water valve closed	Battery voltage
31	W/V	Optical sensor (Passenger)	ON	-	0 - 5V
32	LG/R	In-vehicle sensor signal	ON	-	0 - 5V
33	V	Air mix door (Rear) set point	ON	-	0 - 5V
34	W	CAN-H	ON	-	0 - 5V
35	R	CAN-L	ON	-	0 - 5V
36	G/W	Air mix door motor (Passenger) CW	ON	Clockwise rotation	Battery voltage
37	L	Air mix door motor (Passenger) CCW	ON	Counter clockwise rotation	Battery voltage
38	W/L	Rear blower request	ON	Front blower motor OFF	Battery voltage
				Front blower motor ON	0V
39	Y/B	Rear select signal	ON	-	0V - Battery voltage
40	G/O	Optical sensor (Driver)	ON	-	0 - 5V
41	R/W	Air mix door motor (Passenger) feedback	ON	-	0 - 5V
42	R/Y	Air mix door motor (Rear) feedback	ON	-	0 - 5V
43	BR/Y	In-vehicle sensor motor (+)	ON	-	Battery voltage
44	O/B	In-vehicle sensor motor (-)	ON	-	0V

A/C System Self-diagnosis Function

EJS001VA

DESCRIPTION

The self-diagnostic system diagnoses sensors, door motors, blower motor, etc. Refer to applicable sections (items) for details. Shifting from usual control to the self-diagnostic system is accomplished by turning the ignition switch ON and pressing the down blower arrow switch while turning the passenger temperature dial in either direction (hold momentarily). Within 3 seconds of doing this, press the AUTO switch. The blower bars will flash and the ambient temperature display will indicate 0° during the self-diagnosis. Fault codes (if any are present) will be displayed in the ambient temperature display area. Refer to ATC-54, "SELF-DIAGNOSIS CODE CHART" .

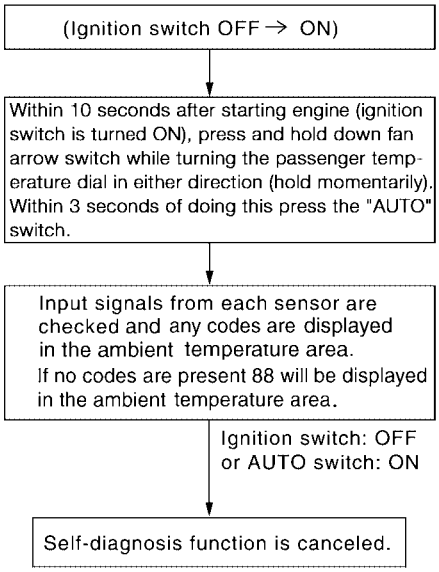

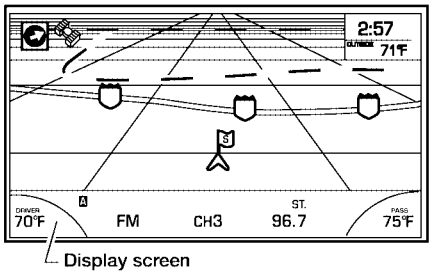

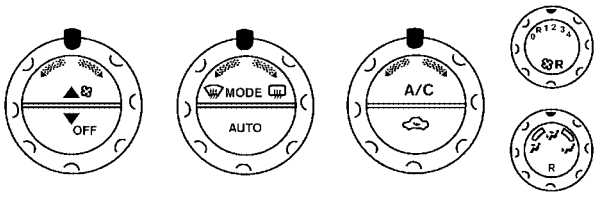

WJIA0585E

SELF-DIAGNOSIS CODE CHART

Code No.	Reference page	
02	EE changed by calibration	ATC-133, "FRONT AIR CONTROL"
03	Battery voltage out of range	SC-4, "BATTERY"
04	Mode switch circuit open or short	ATC-133, "FRONT AIR CONTROL"
05	Blower motor failure	ATC-81, "Front Blower Motor Circuit"
12	Air mix door motor (Passenger) circuit failure	ATC-70, "DIAGNOSTIC PROCEDURE FOR AIR MIX DOOR MOTOR (PASSENGER)"
21	BCM not responding to rear defroster request	GW-73, "REAR WINDOW DEFOGGER"
22	Air mix door motor (Driver) circuit failure	ATC-68, "DIAGNOSTIC PROCEDURE FOR AIR MIX DOOR MOTOR (DRIVER)"
30	In-vehicle sensor circuit out of range (low)	ATC-126, "In-vehicle Sensor Circuit"
31	In-vehicle sensor circuit out of range (high)	
34	Air mix door motor (Driver) PBR circuit failure	ATC-68, "DIAGNOSTIC PROCEDURE FOR AIR MIX DOOR MOTOR (DRIVER)"
36	Air mix door motor (Passenger) PBR circuit failure	ATC-70, "DIAGNOSTIC PROCEDURE FOR AIR MIX DOOR MOTOR (PASSENGER)"
38	Air mix door motor (rear) circuit failure	ATC-72, "DIAGNOSTIC PROCEDURE FOR AIR MIX DOOR MOTOR (REAR)"
40	Ambient sensor circuit short	ATC-123, "Ambient Sensor Circuit"
41	Ambient sensor circuit open	
44	In-vehicle sensor motor circuit open	ATC-126, "In-vehicle Sensor Circuit"
46	In-vehicle sensor motor circuit short	
50	Optical sensor (Driver) circuit open or short	ATC-129, "Optical Sensor Circuit"
52	Optical sensor (Passenger) circuit open or short	
56	Intake sensor circuit short	ATC-131, "Intake Sensor Circuit"
57	Intake sensor circuit open	
62	Defroster door motor circuit failure	ATC-77, "Defroster Door Motor Circuit"
72	Intake door motor circuit failure	ATC-74, "Intake Door Motor Circuit"
80	CAN bus fault	LAN-5, "CAN COMMUNICATION"
81	CAN BCM message missing	
90	Stuck button	ATC-133, "FRONT AIR CONTROL"
92	Mode door motor circuit failure	ATC-62, "Mode Door Motor Circuit"

Operational Check (Front)

EJS001VB

The purpose of the operational check is to confirm that the system operates properly.

Conditions : Engine running and at normal operating temperature

CHECKING MEMORY FUNCTION

1. Set the temperature to 90°F or 32°C.
2. Press OFF switch (hold blower switch down until system shuts OFF).
3. Turn ignition switch OFF.
4. Turn ignition switch ON.

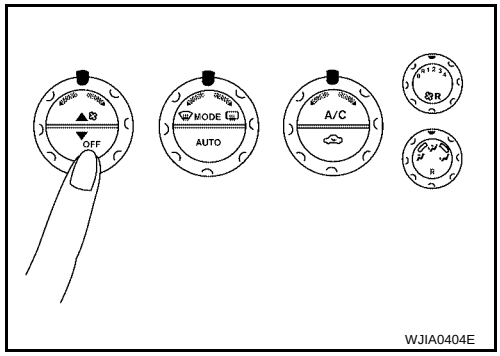

5. Press the AUTO switch.
6. Confirm that the set temperature remains at previous temperature.

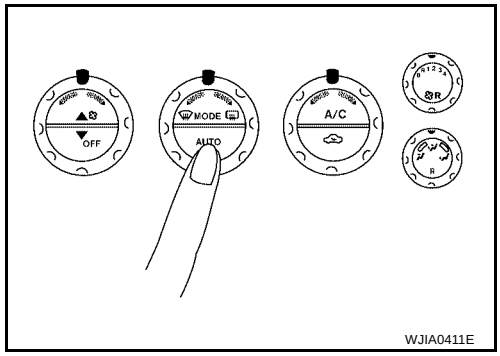

7. Press OFF switch (hold blower switch down until system shuts OFF).

If NG, go to trouble diagnosis procedure for ATC-119, "Memory Function" .
If OK, continue with next check.

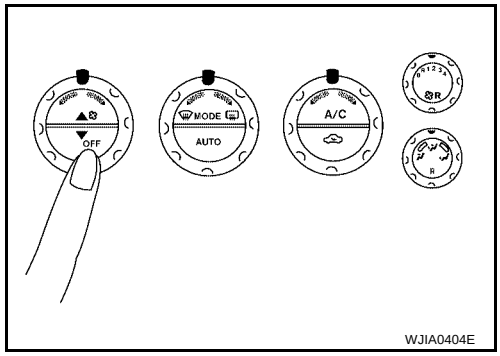

CHECKING BLOWER

1. Press top of blower control switch. Blower should operate on low speed. The blower symbol should have one blade lit (on display).
2. Press top of blower control switch again, and continue checking blower speed and blower symbol until all speeds are checked.
3. Leave blower on MAX speed.

If NG, go to trouble diagnosis procedure for ATC-83, "DIAGNOSTIC PROCEDURE FOR BLOWER MOTOR" .
If OK, continue with next check.

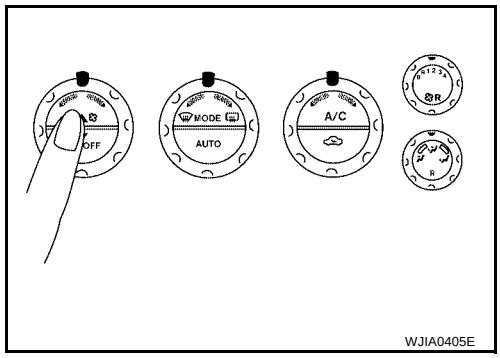

CHECKING DISCHARGE AIR

1. Press MODE switch four times and rotate the DEF dial counterclockwise.
2. Each position indicator should change shape (on display).

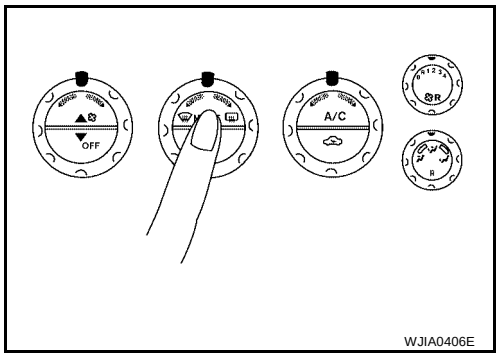

3. Confirm that discharge air comes out according to the air distribution table. Refer to ATC-29, "Discharge Air Flow" .

Mode door position is checked in the next step.
If NG, go to trouble diagnosis procedure for ATC-62, "Mode Door Motor Circuit" .
If OK, continue with next check.

NOTE:
Confirm that the compressor clutch is engaged (sound or visual inspection) and intake door position is at fresh when the DEF or D/F is selected.

Discharge air flow

Mode door position	Air outlet/distribution		
	Vent	Foot	Defroster
	100%	–	–
	50%	50%	–
	–	75%(100%)	25% (–)
	–	60%	40%
	–	–	100%

( ): Manually control

WJIA0528E

CHECKING RECIRCULATION

1. Press recirculation ( ) switch one time. Recirculation indicator should illuminate.
2. Press recirculation ( ) switch one more time. Recirculation indicator should go off.
3. Listen for intake door position change (blower sound should change slightly).

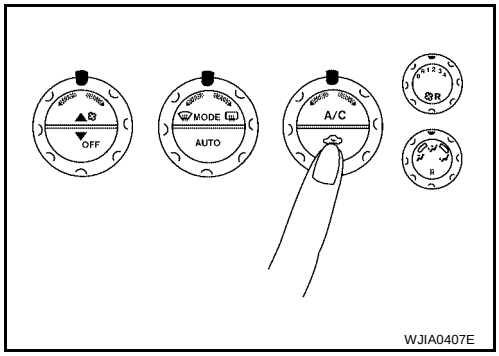

If NG, go to trouble diagnosis procedure for ATC-74, "Intake Door Motor Circuit" .
If OK, continue with next check.

NOTE:
Confirm that the compressor clutch is engaged (sound or visual inspection) and intake door position is at fresh when the DEF or D/F is selected.

CHECKING TEMPERATURE DECREASE

1. Rotate temperature dial counterclockwise (Driver side or Passenger side) until 18°C (60°F) is displayed.
2. Check for cold air at appropriate discharge air outlets.

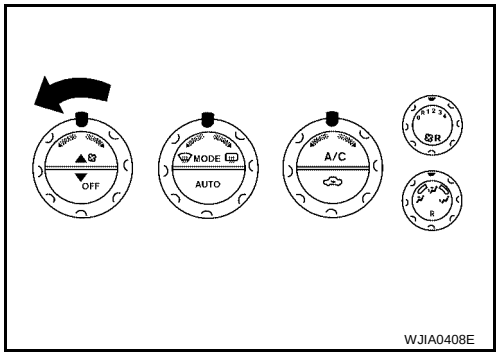

If NG, listen for sound of air mix door motor operation if OK, go to trouble diagnosis procedure for ATC-108, "Insufficient Cooling" . If air mix door motor appears to be malfunctioning, go to ATC-68, "DIAGNOSTIC PROCEDURE FOR AIR MIX DOOR MOTOR (DRIVER)" or ATC-70, "DIAGNOSTIC PROCEDURE FOR AIR MIX DOOR MOTOR (PASSENGER)" .
If OK, continue with next check.

CHECKING TEMPERATURE INCREASE

1. Rotate temperature dial clockwise driver side or passenger side) until 32°C (90°F) is displayed.
2. Check for hot air at appropriate discharge air outlets.

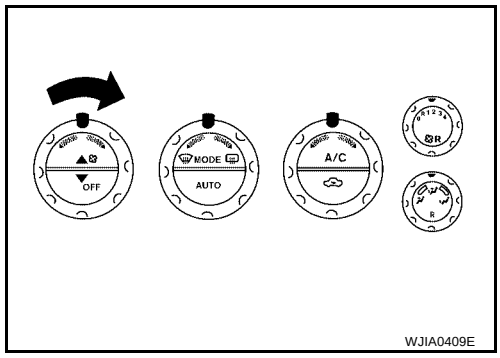

If NG, listen for sound of air mix door motor operation. If OK, go to trouble diagnosis procedure for ATC-115, "Insufficient Heating" . If air mix door motor appears to be malfunctioning, go to ATC-68, "DIAGNOSTIC PROCEDURE FOR AIR MIX DOOR MOTOR (DRIVER)" or ATC-70, "DIAGNOSTIC PROCEDURE FOR AIR MIX DOOR MOTOR (PASSENGER)" .
If OK, continue with next check.

CHECK A/C SWITCH

1. Press A/C switch when AUTO switch is ON, or in manual mode.
2. A/C switch indicator will turn ON.
   - Confirm that the compressor clutch engages (sound or visual inspection).

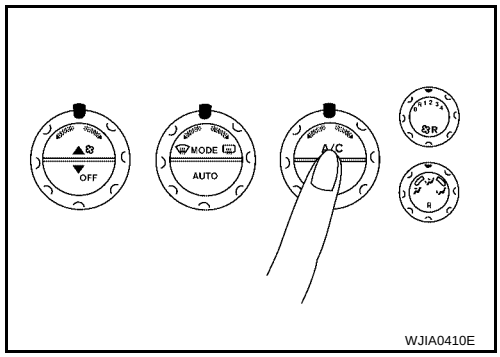

If NG, go to trouble diagnosis procedure for ATC-102, "Magnet Clutch Circuit" .
If OK, continue with next check.

CHECKING AUTO MODE

1. Press AUTO switch.
2. Display should indicate AUTO.
   - If ambient temperature is warm, and selected temperature is cool, confirm that the compressor clutch engages (sound or visual inspection). (Discharge air and blower speed will depend on ambient, in-vehicle, and set temperatures.)

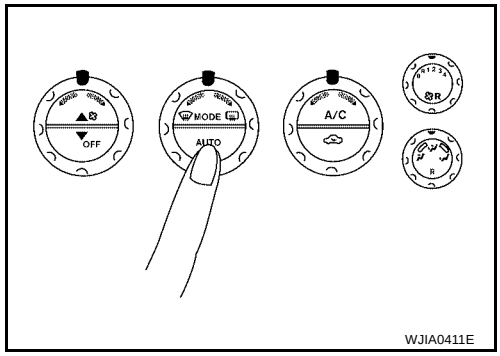

If NG, go to trouble diagnosis procedure for ATC-59, "Power Supply and Ground Circuit for Front Air Control" , then if necessary, trouble diagnosis procedure for ATC-102, "Magnet Clutch Circuit" .
If all operational checks are OK (symptom cannot be duplicated), go to malfunction Simulation Tests in ATC-35, "How to Perform Trouble Diagnosis for Quick and Accurate Repair" and perform tests as outlined to simulate driving conditions environment. If symptom appears. Refer to ATC-35, "How to Perform Trouble Diagnosis for Quick and Accurate Repair" , ATC-35, "SYMPTOM TABLE" and perform applicable trouble diagnosis procedures.

Operational Check (Rear)

EJS00271

The purpose of the operational check is to confirm that the system operates properly.

Conditions : Engine running and at normal operating temperature

CHECKING BLOWER

1. Turn the blower control switch counterclockwise. Blower should operate on low speed.
2. Turn the blower control switch counterclockwise again to switch position "2", "3", and "4" until all speeds are checked.
3. Leave blower on MAX speed.

If NG, go to trouble diagnosis procedure for ATC-88, "Rear Blower Motor Circuit" .
If OK, continue with next check.

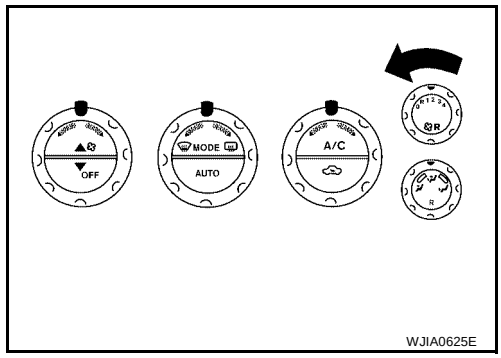

CHECKING TEMPERATURE DECREASE

1. Rotate temperature/mode dial fully counterclockwise.
2. Check for cold air at appropriate discharge air outlets.

If NG, listen for sound of air mix door motor operation if OK, go to trouble diagnosis procedure for ATC-108, "Insufficient Cooling" . If air mix door motor appears to be malfunctioning, go to ATC-72, "DIAGNOSTIC PROCEDURE FOR AIR MIX DOOR MOTOR (REAR)" .
If OK, continue with next check.

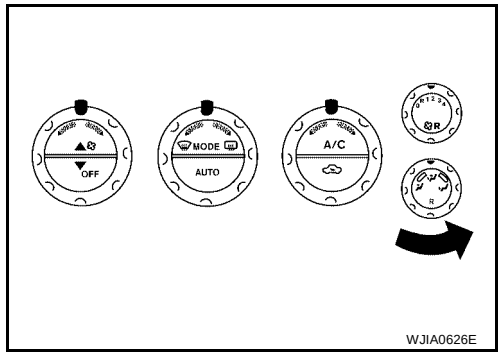

CHECKING TEMPERATURE INCREASE

1. Rotate temperature/mode dial clockwise.
2. Check for hot air at appropriate discharge air outlets.

If NG, listen for sound of air mix door motor operation. If OK, go to trouble diagnosis procedure for ATC-115, "Insufficient Heating" . If air mix door motor appears to be malfunctioning, go to ATC-72, "DIAGNOSTIC PROCEDURE FOR AIR MIX DOOR MOTOR (REAR)" .
If OK, continue with next check.

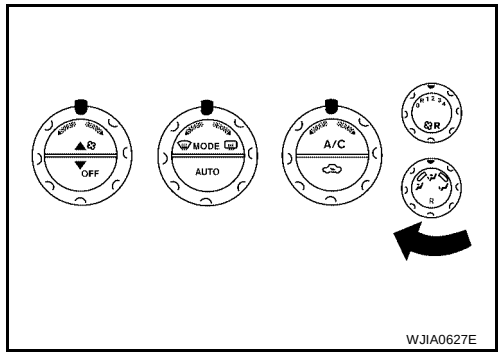

Power Supply and Ground Circuit for Front Air Control

EJS001VC

SYMPTOM: A/C system does not come on.

INSPECTION FLOW

1. Confirm symptom by performing the following operatonal check.

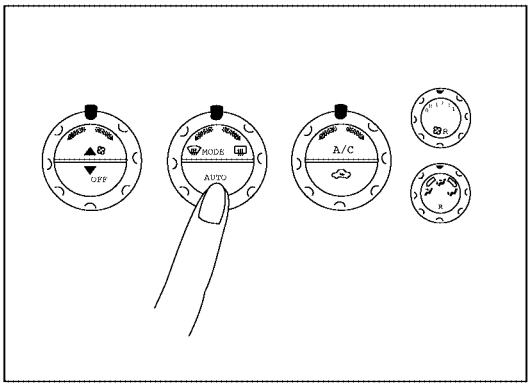

OPERATIONAL CHECK – AUTO mode

a. Press AUTO. switch.
b. Display should indicate AUTO.
Confirm that the compressor clutch engages (Sound or visual inspection).
(Discharge air and blower speed will depend on ambient, in-vehicle and set temperatures.)

If OK (symptom cannot be duplicated), perform complete operational check (*2).
If NG (symptom is confirmed), continue with STEP-2 following.

2. Check for any service bulletins. → 3. Check Main Power Supply and Ground Circuit. (*1) → 4. Replace front air control.

WJIA0586E

*1 ATC-59, "Power Supply and Ground Circuit for Front Air Control".

*2 ATC-55, "Operational Check (Front)" or ATC-58, "Operational Check (Rear)" .

COMPONENT DESCRIPTION

Front Air Control

The front air control has a built-in microcomputer which processes information sent from various sensors needed for air conditioner operation. The air mix door motors, mode door motor, intake door motor, defroster door motor, blower motor and compressor are then controlled.
The front air control is unitized with control mechanisms. When the various switches and temperature dials are operated, data is input to the front air control.
Self-diagnostic functions are also built into the front air control to provide quick check of malfunctions in the auto air conditioner system.

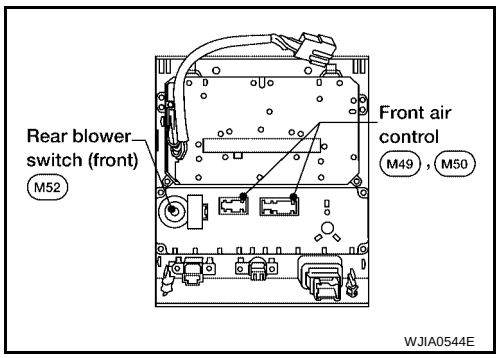

Potentio Temperature Control (PTC)

There are two PTCs (passenger and driver) built into the front air control. They can be set at an interval of 0.5°C (1.0°F) in the 18°C (60°F) to 32°C (90°F) temperature range by rotating the temperature dial. The set temperature is displayed.

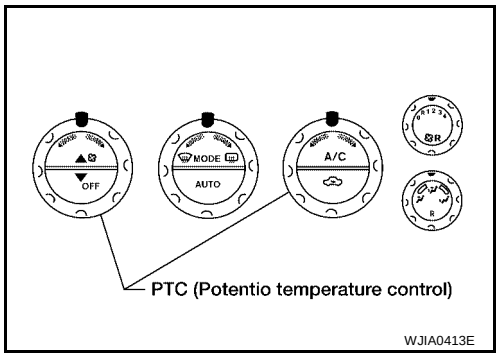

DIAGNOSTIC PROCEDURE FOR A/C SYSTEM

SYMPTOM: A/C system does not come on.

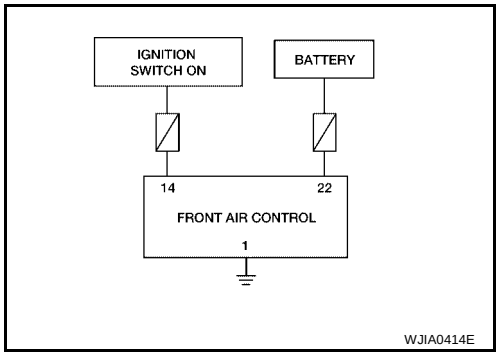

1. CHECK POWER SUPPLY CIRCUITS FOR FRONT AIR CONTROL

1. Disconnect front air control connector.
2. Check voltage between front air control harness connector M49 terminals 14 (G/Y) and 22 (Y/R), and ground.

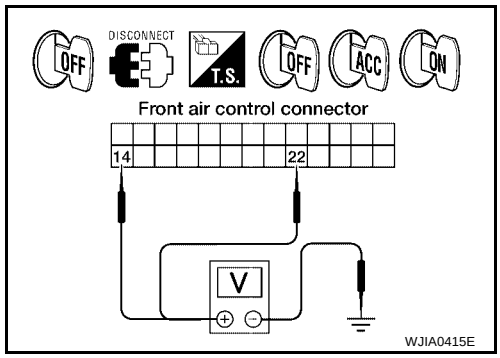

Terminals			Ignition switch position		
(+)		(-)	OFF	ACC	ON
Front air control connector	Terminal No. (Wire color)				
M49	14 (Y/G)	Ground	Approx. 0V	Approx. 0V	Battery voltage
M49	22 (Y/R)		Battery voltage	Battery voltage	Battery voltage

OK or NG

OK >> GO TO 2.

NG >> Check 10A fuses [Nos. 8 and 19, located in the fuse block (J/B)]. Refer to PG-74 .

- If fuses are OK, check harness for open circuit. Repair or replace as necessary.
- If fuses are NG, replace fuse and check harness for short circuit. Repair or replace as necessary.

2. CHECK GROUND CIRCUIT FOR FRONT AIR CONTROL

1. Turn ignition switch OFF.
2. Check continuity between front air control harness connector M49 terminal 1 (B) and ground.

1 - Ground : Continuity should exist.

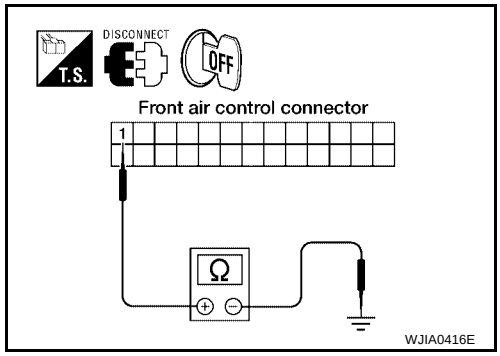

OK or NG

OK >> Replace front air control. Refer to ATC-133, "FRONT AIR CONTROL" .

NG >> Repair harness or connector.

Mode Door Motor Circuit

EJS001VD

SYMPTOM:

- Air outlet does not change.
- Mode door motor does not operate normally.

INSPECTION FLOW

1. Confirm symptom by performing the following operational check.

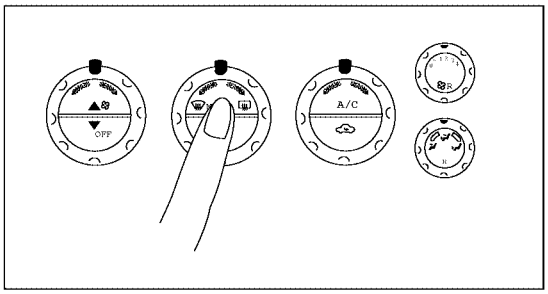

OPERATIONAL CHECK – Discharge air

a. Press mode switch four times and DEF switch.
b. Each position indicator should change shape. (on display)

Discharge air flow

Mode door position	Air outlet/distribution		
	Vent	Foot	Defroster
	100%	–	–
	50%	50%	–
	–	75%(100%)	25% (–)
	–	60%	40%
	–	–	100%

c. Confirm that discharge air comes out according to the air distribution table at left.
Refer to "Discharge Air Flow" (*1).

NOTE:

- **If OK (symptom cannot be duplicated), perform complete operational check (*2).**
  If NG (symptom is confirmed), continue with STEP-2 following.
- **Confirm that the compressor clutch is engaged (visual inspection) and intake door position is at FRESH when DEF or D/F is selected.**

2. Check for any service bulletins.
3. Check mode door mechanism.
4. Perform self-diagnosis (*3).
5. Are any self-diagnosis codes retrieved?
   - NO → Check the PBR circuit (*5).
     - NG → Repair PBR circuit or replace motor.
     - YES → If the symptom still exists, perform "Self-diagnosis" (*4) and a complete "Operational Check" (*5) and check for other codes and symptoms. [Refer to "Malfunction Code/Symptom Chart" (*5).] Does another symptom exist?
       - YES → Go to Trouble Diagnosis for related code or symptom.
       - NO → Replace front air control.
   - YES → 5. Refer to self-diagnosis code chart (*4).

WJIA0422E

*1 ATC-29, "Discharge Air Flow".
*2 ATC-55, "Operational Check (Front)".
*3 ATC-53, "A/C System Self-diagnosis Function".
*4 ATC-54, "SELF-DIAGNOSIS CODE CHART".
*5 ATC-64, "DIAGNOSTIC PROCEDURE FOR MODE DOOR MOTOR".

SYSTEM DESCRIPTION

Component Parts

Mode door control system components are:

- Front air control
- Mode door motor
- PBR (built into mode door motor)
- In-vehicle sensor
- Ambient sensor
- Optical sensor
- Intake sensor

System Operation

The mode door position (vent, B/L, foot, and defrost) is set by the front air control by means of the mode door motor. When a mode door position is selected on the front air control, voltage is applied to one circuit of the mode door motor while ground is applied to the other circuit, causing the mode door motor to rotate. The direction of rotation is determined by which circuit has voltage applied to it, and which one has ground applied to it. The front air control monitors the mode door position by measuring the voltage signal on the PBR circuit.
In AUTO mode the mode door position is set by the front air control which determines the proper position based on inputs from the in-vehicle sensor, ambient sensor, optical sensor, intake sensor, and the temperature selected by the driver or passenger.

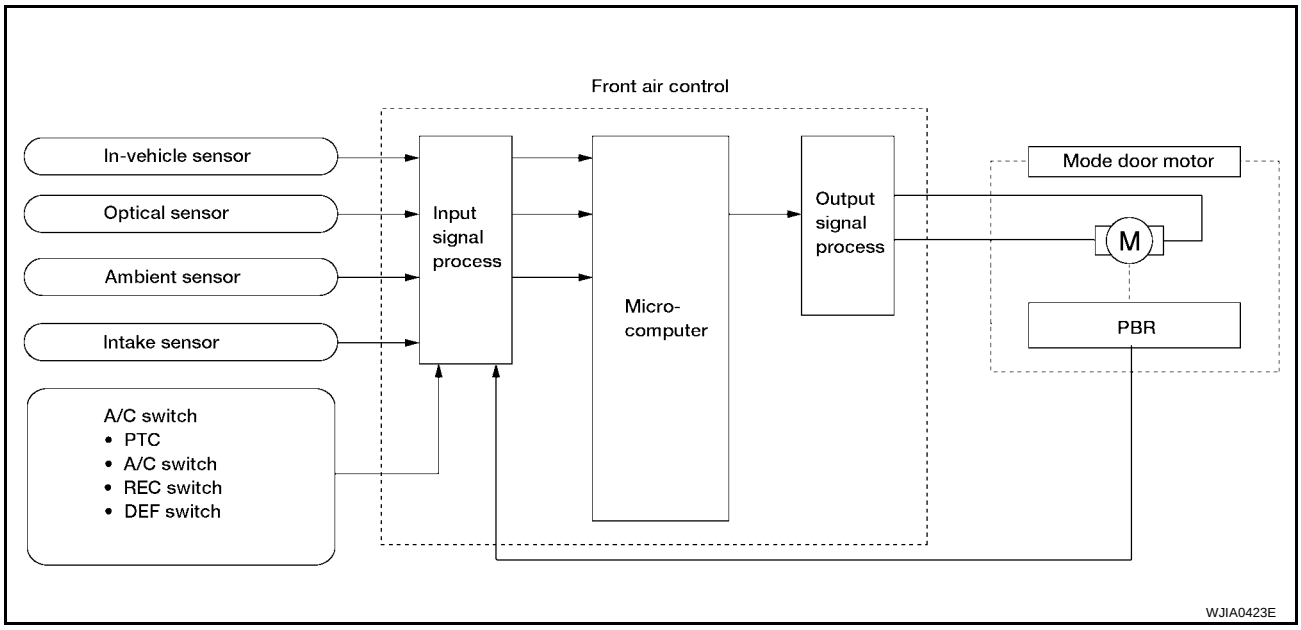

Mode Door Control Specification

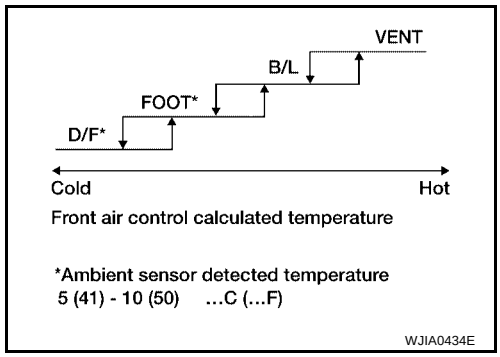

COMPONENT DESCRIPTION

Mode Door Motor

The mode door motor is attached to the heater & cooling unit. It rotates so that air is discharged from the outlet as indicated by the front air control. Motor rotation is conveyed to a link which activates the mode door.

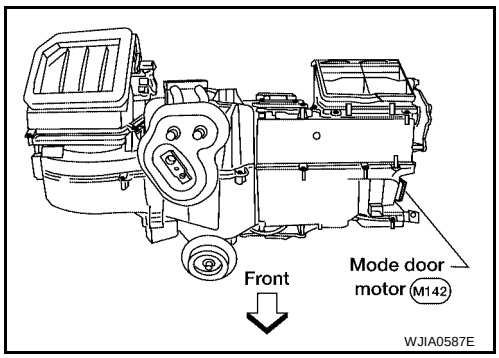

DIAGNOSTIC PROCEDURE FOR MODE DOOR MOTOR

1. CHECK RESULT FROM FRONT AIR CONTROL SELF-DIAGNOSIS

Self-diagnosis code 92 is present. Refer to ATC-53, "A/C System Self-diagnosis Function" .

YES or NO

YES >> GO TO 2.
NO >> GO TO 3.

2. CHECK POWER SUPPLY AND GROUND CIRCUITS FOR MODE DOOR MOTOR

1. Turn ignition switch OFF.
2. Disconnect front air control connector and mode door motor connector.
3. Check continuity between front air control harness connector M49 terminal 5 (BR/W) and mode door motor connector M142 terminal 5 (BR/W) and between front air control harness connector M49 terminal 6 (P/L) and mode door motor connector M142 terminal 6 (P/L).

5 - 5 : Continuity should exist.
6 - 6 : Continuity should exist.

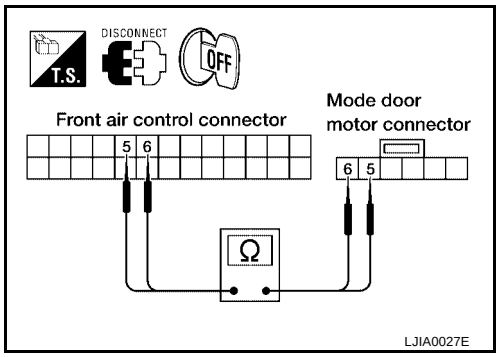

OK or NG

OK >> Replace mode door motor.
NG >> Repair or replace harness as necessary.

3. CHECK PBR REFERENCE SIGNAL VOLTAGE

1. Disconnect the mode door motor connector.
2. Turn ignition switch ON.
3. Check voltage between mode door motor harness connector M142 terminal 3 (Y) and ground.

3 - Ground : Approx. 5V

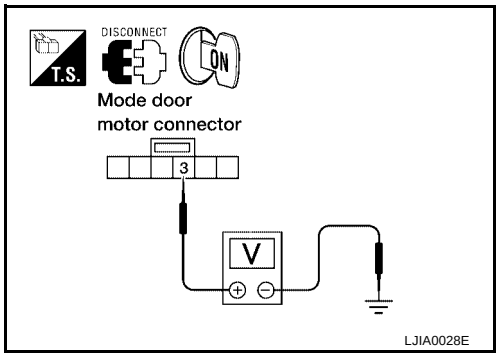

OK or NG

OK >> GO TO 5.
NG >> GO TO 4.

4. CHECK PBR REFERENCE VOLTAGE CIRCUIT BETWEEN MODE DOOR AND FRONT AIR CONTROL

1. Turn ignition switch OFF.
2. Disconnect the front air control connector.
3. Check continuity between mode door motor harness connector M142 terminal 3 (Y) and front air control harness connector M49 terminal 2 (Y).

3 - 2 : Continuity should exist.

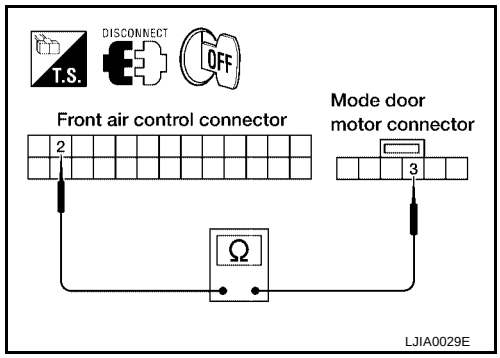

OK or NG

OK >> Replace front air control. Refer to ATC-133, "FRONT AIR CONTROL" .

NG >> Repair or replace harness as necessary.

5. CHECK PBR GROUND REFERENCE CIRCUIT

1. Turn ignition switch OFF.
2. Disconnect the front air control connector.
3. Check continuity between mode door motor harness connector M142 terminal 1 (P) and front air control harness connector M49 terminal 15 (P).

1 - 15 : Continuity should exist.

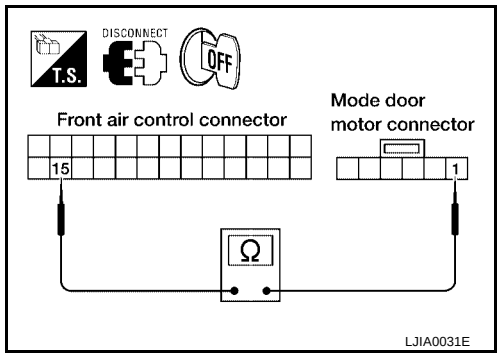

OK or NG

OK >> GO TO 6.

NG >> Repair or replace harness as necessary.

6. CHECK PBR FEEDBACK SIGNAL

1. Turn ignition switch OFF.
2. Reconnect the front air control connector and mode door motor connector.
3. Check voltage between front air control harness connector M49 terminal 16 (GR) and ground.
4. Press mode switch through all modes.

16 - Ground : Approx. 0 - 5V

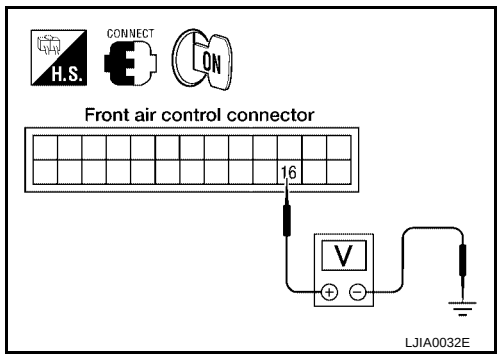

OK or NG

OK >> Replace front air control. Refer to ATC-133, "FRONT AIR CONTROL" .

NG >> GO TO 7.

7. CHECK PBR FEEDBACK CIRCUIT

1. Turn ignition switch OFF.
2. Disconnect the mode door motor connector and front air control harness connector.
3. Check continuity between mode door motor harness connector M142 terminal 2 (GR) and front air control harness connector M49 terminal 16 (GR).

2 - 16 : Continuity should exist.

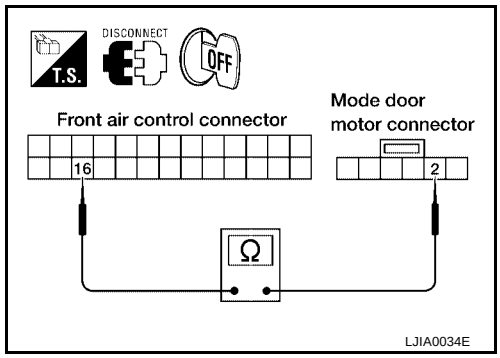

OK or NG

OK >> Replace mode door motor. Refer to ATC-150, "MODE DOOR MOTOR" .

NG >> Repair or replace harness as necessary.

Air Mix Door Motor Circuit

EJS001VE

SYMPTOM:

- Discharge air temperature does not change.
- Air mix door motor does not operate.

INSPECTION FLOW

1. Confirm symptom by performing the following operational check.

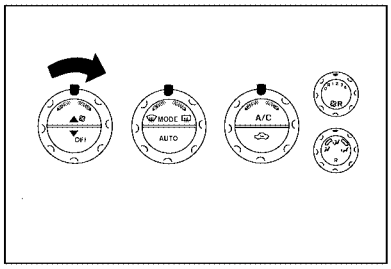

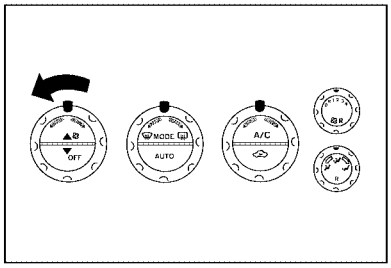

OPERATIONAL CHECK

Temperature increase

a. Turn the temperature dial clockwise until 32°C (90°F) is displayed.
b. Check for hot air at discharge air outlets.

Temperature decrease

a. Turn the temperature dial counterclockwise until 18°C (60°F) is displayed.
b. Check for cold air at discharge air outlets.

If OK (symptom cannot be duplicated), perform complete operational check (*1).
If NG (symptom is confirmed), continue with STEP-2 following.

2. Check for any service bulletins.

3. Check air mix door mechanism.
- NG → Repair or adjust linkage.
- OK ↓

4. Perform self-diagnosis (*2).

Are any self-diagnosis codes retrieved?
- NO → Check the PBR circuits (*5).
  - NG → Repair PBR circuit(s) or replace air mix motor.
  - OK ↓ If the symptom still exists, perform "Self-diagnosis" (*4), (*5), (*6) and complete "Operational Check" (*1) and check for other codes and symptoms. [Refer to "Self-diagnosis Chart (*3)]. Does another symptom exist?
    - YES → Go to "Trouble Diagnosis" for related code or symptom.
    - NO → Replace front air control.
- YES ↓

5. Refer to self-diagnosis code chart (*3).

WJIA0426E

*1	ATC-55, "Operational Check (Front)" or ATC-58, "Operational Check (Rear)" .	*2	ATC-53, "A/C System Self-diagnosis Function".	*3	ATC-54, "SELF-DIAGNOSIS CODE CHART".
*4	ATC-68, "DIAGNOSTIC PROCEDURE FOR AIR MIX DOOR MOTOR (DRIVER)".	*5	ATC-70, "DIAGNOSTIC PROCEDURE FOR AIR MIX DOOR MOTOR (PASSENGER)"	*6	ATC-72, "DIAGNOSTIC PROCEDURE FOR AIR MIX DOOR MOTOR (REAR)"

SYSTEM DESCRIPTION

Component Parts

Air mix door control system components are:

- Front air control.
- Air mix door motors (Driver, Passenger, and rear)
- PBR (built-into air mix door motors)
- In-vehicle sensor
- Ambient sensor
- Optical sensor
- Intake sensor

System Operation

The front air control receives data from the temperature selected by the driver side, passenger side, and rear. The front air control then applies a voltage to one circuit of the appropriate air mix door motor, while ground is applied to the other circuit, causing the appropriate air mix door motor to rotate. The direction of rotation is determined by which circuit has voltage applied to it, and which one has ground applied to it. The front air control monitors the air mix door positions by measuring the voltage signal on the PBR circuits of each door.
In AUTO mode the air mix, intake, mode door, and defrost door positions are set by the front air control which determines the proper position based on inputs from the in-vehicle sensor, ambient sensor, optical sensor, intake sensor, and the temperature selected by the driver and front and rear passengers.
Subsequently, HOT/COLD or DEFROST/VENT or FRESH/RECIRCULATION operation is selected. The new door position data is returned to the front air control.

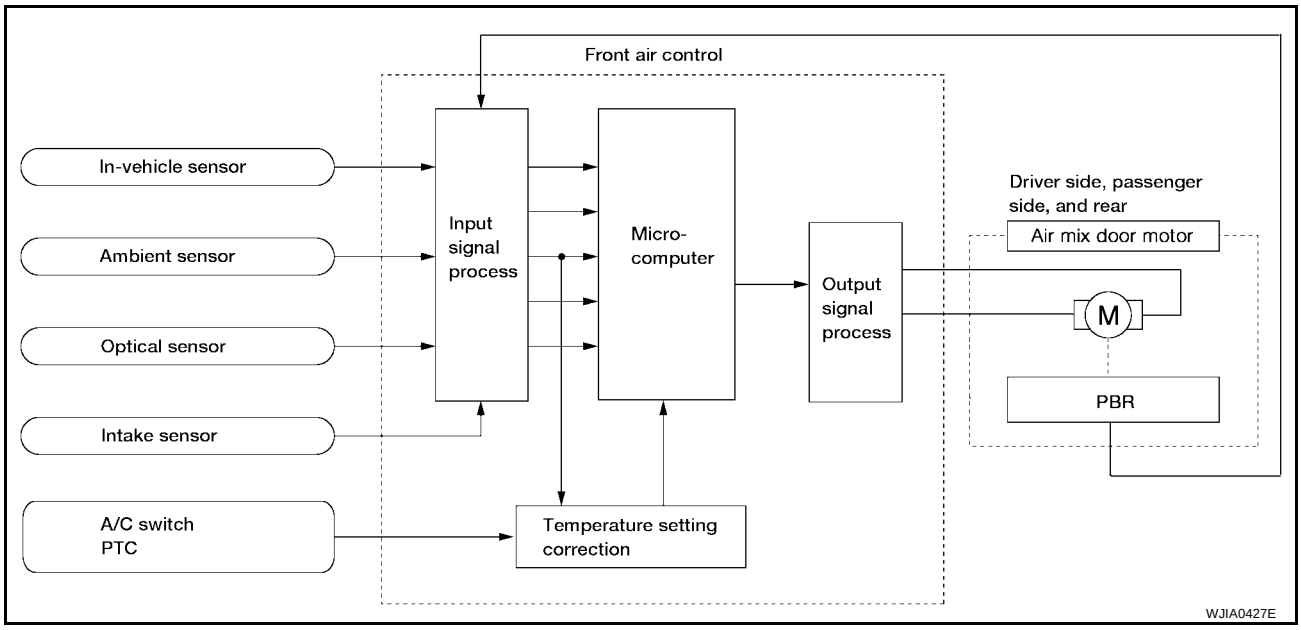

Air Mix Door Control Specification

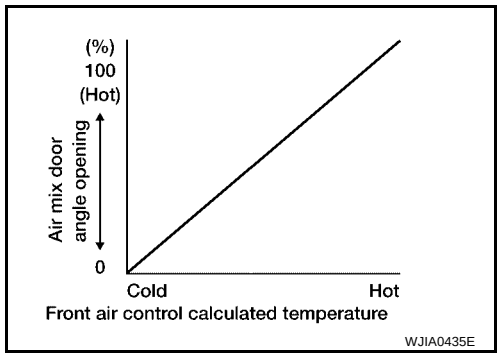

COMPONENT DESCRIPTION

Air Mix Door Motors

The driver and front passenger air mix door motors are attached to the front heater & cooling unit. The rear air mix door motor is attached to the rear heater & cooling unit. These motors rotate so that the air mix door is opened or closed to a position set by the front (or rear) air control. Motor rotation is then conveyed through a shaft and the air mix door position is then fed back to the front air control by the PBR built into the air mix door motors.

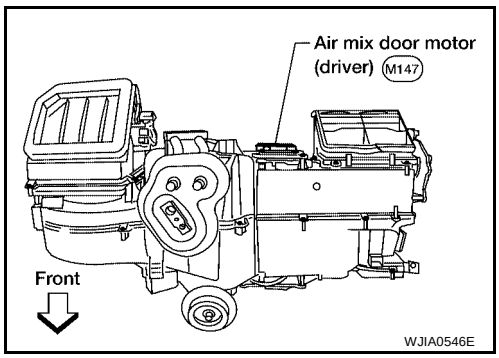

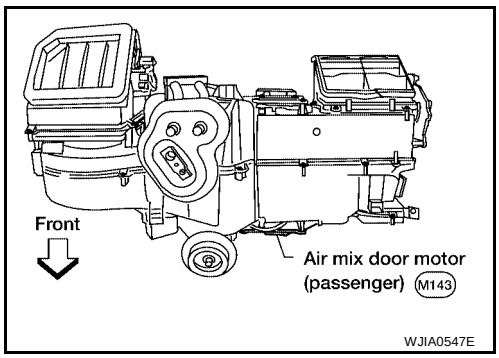

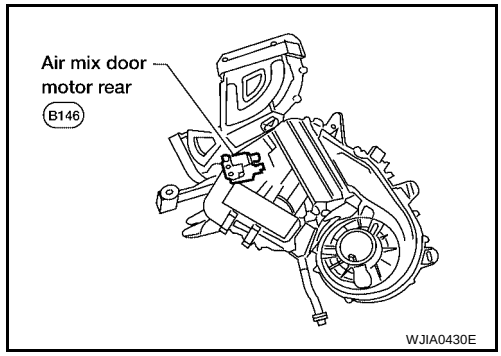

DIAGNOSTIC PROCEDURE FOR AIR MIX DOOR MOTOR (DRIVER)

1. CHECK RESULT FROM FRONT AIR CONTROL SELF-DIAGNOSIS

Self-diagnosis code 22 is present. Refer to ATC-53, "A/C System Self-diagnosis Function" .

YES or NO

YES >> GO TO 2.
NO >> GO TO 3.

2. CHECK POWER SUPPLY CIRCUITS FOR AIR MIX DOOR MOTOR (DRIVER)

1. Turn ignition switch OFF.
2. Disconnect front air control connector and air mix door motor (Driver) connector.
3. Check continuity between front air control harness connector M49 terminal 3 (W/G) and 4 (G) and air mix door motor (Driver) connector M147 terminal 1 (W/G) and 6 (G).

3 - 1 : Continuity should exist.
4 - 6 : Continuity should exist.

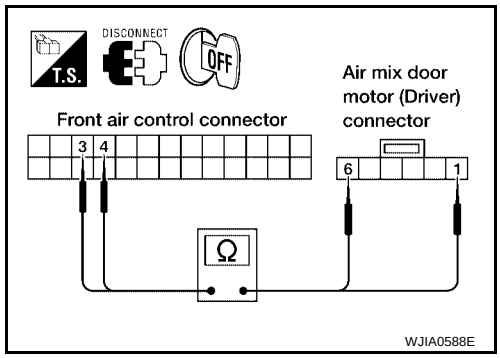

OK or NG

OK >> Replace air mix door motor (Driver). Refer to ATC-151, "FRONT AIR MIX DOOR MOTOR (DRIVER)" .
NG >> Repair or replace harness as necessary.

3. CHECK PBR REFERENCE SIGNAL VOLTAGE

1. Turn ignition switch OFF.
2. Disconnect the air mix door motor (Driver) connector.
3. Turn ignition switch ON.
4. Check voltage between air mix door motor (Driver) harness connector M147 terminal 3 (Y) and ground.

3 - Ground : Approx. 5V

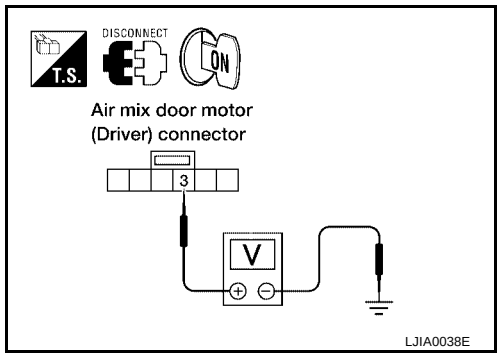

OK or NG

OK >> GO TO 5.
NG >> GO TO 4.

4. CHECK PBR REFERENCE VOLTAGE CIRCUIT BETWEEN AIR MIX DOOR MOTOR (DRIVER) AND FRONT AIR CONTROL

1. Turn ignition switch OFF.
2. Disconnect the front air control connector.
3. Check continuity between air mix door motor (Driver) harness connector M147 terminal 3 (Y) and front air control harness connector M49 terminal 2 (Y).

3 - 2 : Continuity should exist.

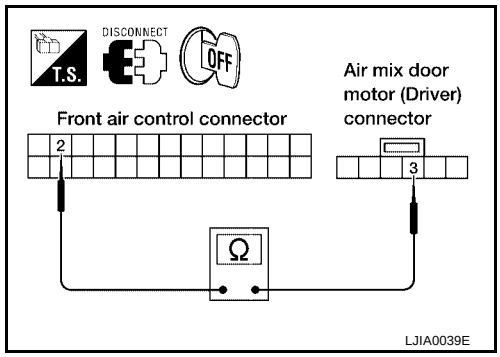

OK or NG

OK >> Replace front air control. Refer to ATC-133, "FRONT AIR CONTROL" .
NG >> Repair or replace harness as necessary.

5. CHECK PBR GROUND REFERENCE CIRCUIT

1. Turn ignition switch OFF.
2. Disconnect the front air control connector.
3. Check continuity between air mix door motor (Driver) harness connector M147 terminal 2 (P) and front air control harness connector M49 terminal 15 (P).

2 - 15 : Continuity should exist.

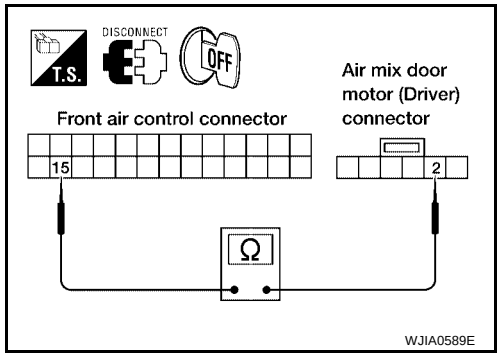

OK or NG

OK >> GO TO 6.
NG >> Repair or replace harness as necessary.

6. CHECK PBR FEEDBACK SIGNAL

1. Turn ignition switch OFF.
2. Reconnect the front air control connector and air mix door motor (Driver) connector.
3. Check voltage between front air control harness connector M49 terminal 18 (SB) and ground.
4. Rotate Driver temperature dial through complete range.

18 - Ground **: Approx. 0V - 5V**

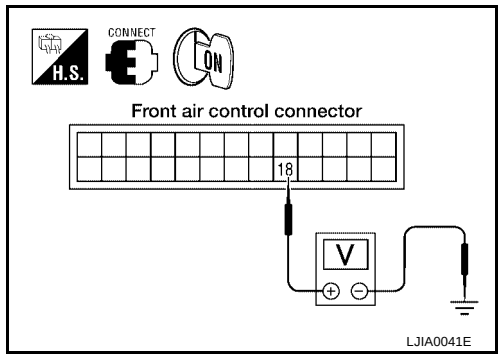

OK or NG

OK >> Replace front air control. Refer to ATC-133, "FRONT AIR CONTROL" .

NG >> GO TO 7.

7. CHECK PBR FEEDBACK CIRCUIT

1. Turn ignition switch OFF.
2. Disconnect the air mix door motor (Driver) connector and front air control connector.
3. Check continuity between air mix door motor (Driver) harness connector M147 terminal 4 (SB) and front air control harness connector M49 terminal 18 (SB).

4 - 18 **Continuity should exist.**

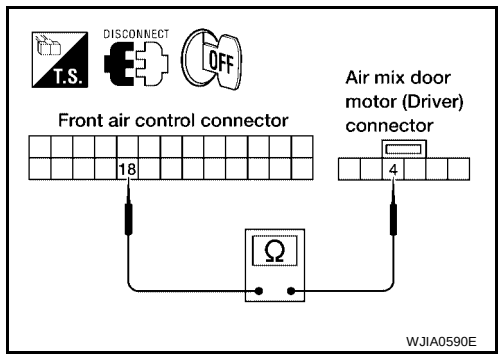

OK or NG

OK >> Replace air mix door motor (Driver). Refer to ATC-151, "FRONT AIR MIX DOOR MOTOR (DRIVER)" .

NG >> Repair or replace harness as necessary.

DIAGNOSTIC PROCEDURE FOR AIR MIX DOOR MOTOR (PASSENGER)

1. CHECK RESULT FROM FRONT AIR CONTROL SELF-DIAGNOSIS

Self-diagnosis code 12 is present. Refer to ATC-53, "A/C System Self-diagnosis Function" .

YES or NO

YES >> GO TO 2.

NO >> GO TO 3.

2. CHECK POWER SUPPLY CIRCUIT FOR AIR MIX DOOR MOTOR (PASSENGER)

1. Turn ignition switch OFF.
2. Disconnect front air control connector and air mix door motor (Passenger) connector.
3. Check continuity between front air control harness connector M50 terminal 36 (G/W) and 37 (L) and air mix door motor (Passenger) connector M143 terminal 1 (G/W) and 6 (L).

36 - 1 **Continuity should exist.**

37 - 6 **Continuity should exist.**

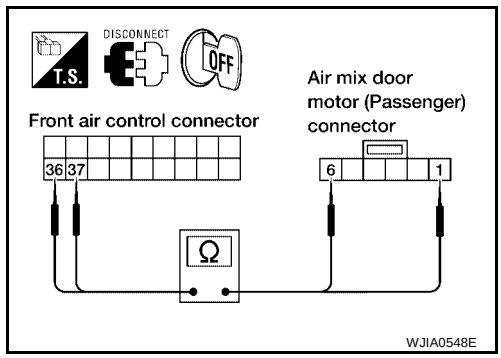

OK or NG

OK >> Replace air mix door motor (Passenger). Refer to ATC-152, "FRONT AIR MIX DOOR MOTOR (PASSENGER)" .

NG >> Repair or replace harness as necessary.

3. CHECK PBR REFERENCE SIGNAL VOLTAGE

1. Turn ignition switch OFF.
2. Disconnect the air mix door motor (Passenger) connector.
3. Turn ignition switch ON.
4. Check voltage between air mix door motor (Passenger) harness connector M143 terminal 3 (Y) and ground.

3 - Ground : Approx.5V

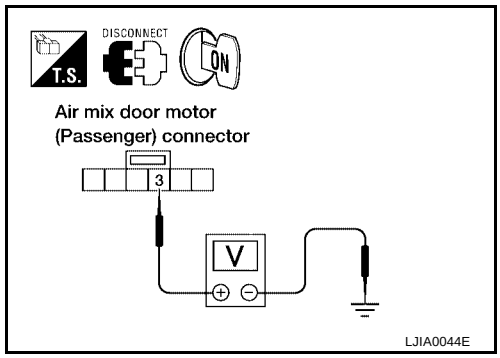

OK or NG

OK >> GO TO 5.
NG >> GO TO 4.

4. CHECK PBR REFERENCE VOLTAGE CIRCUIT BETWEEN AIR MIX DOOR (PASSENGER) AND FRONT AIR CONTROL

1. Turn ignition switch OFF.
2. Disconnect the front air control connector.
3. Check continuity between air mix door motor (Passenger) harness connector M143 terminal 3 (Y) and front air control harness connector M49 terminal 2 (Y).

3 - 2 Continuity should exist.

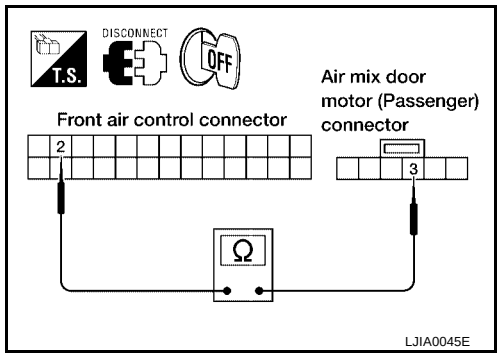

OK or NG

OK >> Replace front air control. Refer to ATC-133, "FRONT AIR CONTROL" .
NG >> Repair or replace harness as necessary.

5. CHECK PBR GROUND REFERENCE CIRCUIT

1. Turn ignition switch OFF.
2. Disconnect the front air control connector.
3. Check continuity between air mix door motor (Passenger) harness connector M143 terminal 2 (P) and front air control harness connector M49 terminal 15 (P).

2 - 15 Continuity should exist.

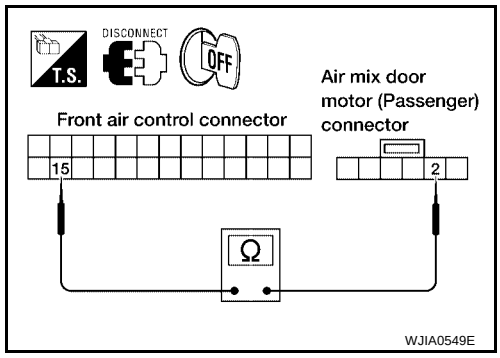

OK or NG

OK >> GO TO 6.
NG >> Repair or replace harness as necessary.

6. CHECK PBR FEEDBACK SIGNAL

1. Reconnect the front air control connector and air mix door motor (Passenger) connector.
2. Turn ignition switch ON.
3. Check voltage between front air control harness connector M50 terminal 41 (R/W) and ground.
4. Rotate Passenger temperature dial through complete range.

41 - Ground : Approx. 0 - 5V

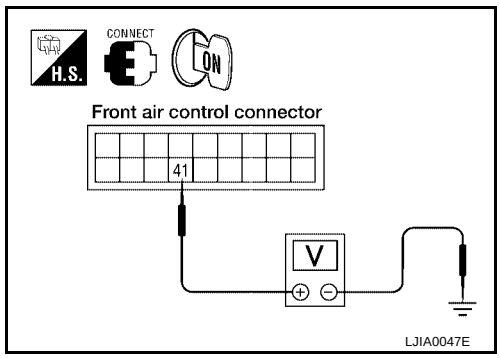

OK or NG

OK >> Replace front air control. Refer to ATC-133, "FRONT AIR CONTROL" .
NG >> GO TO 7.

7. CHECK PBR FEEDBACK CIRCUIT

1. Turn ignition switch OFF.
2. Disconnect the air mix door motor (Passenger) connector and front air control connector.
3. Check continuity between air mix door motor (Passenger) harness connector M143 terminal 4 (R/W) and front air control harness connector M50 terminal 41 (R/W).

4 - 41 : Continuity should exist.

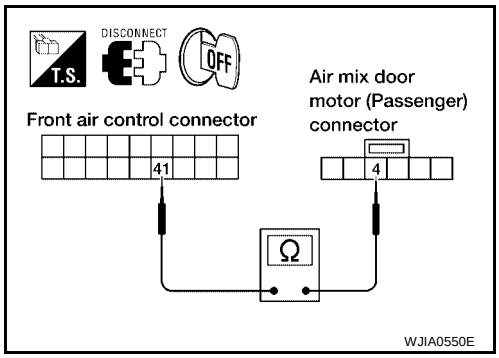

OK or NG

OK >> Replace air mix door motor (Passenger). Refer to ATC-152, "FRONT AIR MIX DOOR MOTOR (PASSENGER)" .

NG >> Repair or replace harness as necessary.

DIAGNOSTIC PROCEDURE FOR AIR MIX DOOR MOTOR (REAR)

1. CHECK RESULT FROM FRONT AIR CONTROL SELF-DIAGNOSIS

Self-diagnosis code 38 is present. Refer to ATC-53, "A/C System Self-diagnosis Function" .

YES or NO

YES >> GO TO 2.
NO >> GO TO 3.

2. CHECK POWER SUPPLY CIRCUIT FOR AIR MIX DOOR MOTOR (REAR)

1. Turn ignition switch OFF.
2. Disconnect front air control connector and air mix door motor (Rear) connector.
3. Check continuity between front air control harness connector M50 terminal 27 (GR/R) and air mix door motor (Rear) connector B155 terminal 1 (GR/R) and between front air control harness connector M50 terminal 28 (L/Y) and air mix door motor (rear) connector B155 terminal 6 (L/Y).

27 - 1 Continuity should exist.
28 - 6 Continuity should exist.

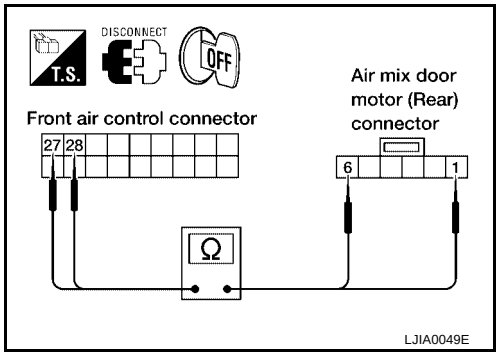

OK or NG

OK >> Replace air mix door motor (Rear). Refer to ATC-152, "REAR AIR MIX DOOR MOTOR" .
NG >> Repair or replace harness as necessary.

3. CHECK PBR REFERENCE SIGNAL VOLTAGE

1. Turn ignition switch OFF.
2. Disconnect the air mix door motor (Rear) connector.
3. Turn ignition switch ON.
4. Check voltage between air mix door motor (Rear) harness connector B155 terminal 3 (Y) and ground.

3 - Ground : Approx. 5V

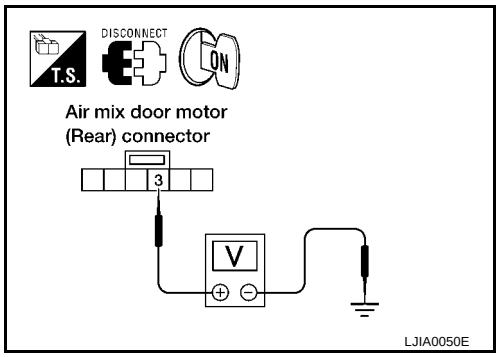

OK or NG

OK >> GO TO 5.
NG >> GO TO 4.

4. CHECK PBR REFERENCE VOLTAGE CIRCUIT BETWEEN AIR MIX DOOR MOTOR (REAR) AND FRONT AIR CONTROL

1. Turn ignition switch OFF.
2. Disconnect the front air control connector.
3. Check continuity between air mix door motor (Rear) harness connector B155 terminal 3 (Y) and front air control harness connector M49 terminal 2 (Y).

3 - 2 **Continuity should exist.**

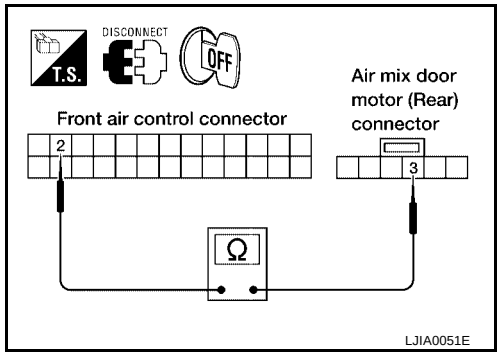

OK or NG

OK >> Replace front air control. Refer to ATC-133, "FRONT AIR CONTROL" .

NG >> Repair or replace harness as necessary.

5. CHECK PBR GROUND REFERENCE CIRCUIT

1. Turn ignition switch OFF.
2. Disconnect the front air control connector.
3. Check continuity between air mix door motor (Rear) harness connector B155 terminal 2 (P) and front air control harness connector M49 terminal 15 (P).

2 - 15 **Continuity should exist.**

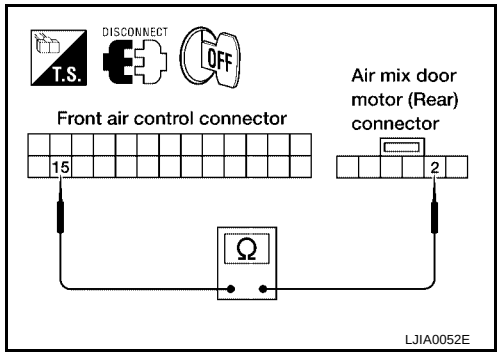

OK or NG

OK >> GO TO 6.

NG >> Repair or replace harness as necessary.

6. CHECK PBR FEEDBACK SIGNAL

1. Reconnect the front air control connector and air mix door motor (Rear) connector.
2. Turn ignition switch ON.
3. Check voltage between front air control harness connector M50 terminal 42 (R/Y) and ground.
4. Rotate rear temperature dial through complete range.

42 - Ground **: Approx. 0 - 5V**

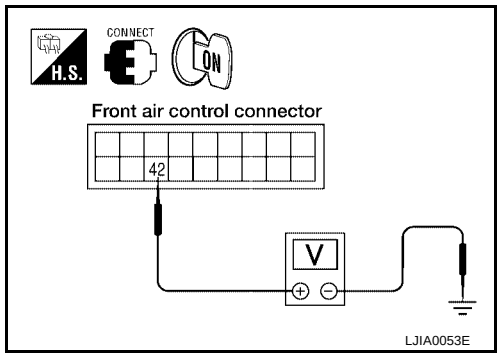

OK or NG

OK >> Replace front air control. Refer toATC-133, "FRONT AIR CONTROL" .

NG >> GO TO 7.

7. CHECK PBR FEEDBACK CIRCUIT

1. Turn ignition switch OFF.
2. Disconnect the air mix door motor (Rear) connector and front air control connector.
3. Check continuity between air mix door motor (Rear) harness connector B155 terminal 4 (R/Y) and front air control harness connector M50 terminal 42 (R/Y).

4 - 42 **Continuity should exist.**

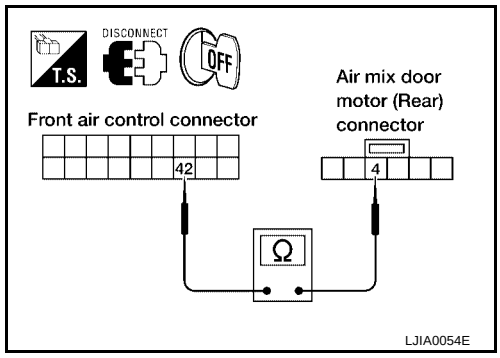

OK or NG

OK >> Replace air mix door motor (Rear) ATC-152, "REAR AIR MIX DOOR MOTOR" .

NG >> Repair or replace harness as necessary.

Intake Door Motor Circuit

EJS001VF

SYMPTOM:

- Intake door does not change.
- Intake door motor does not operate normally.

INSPECTION FLOW

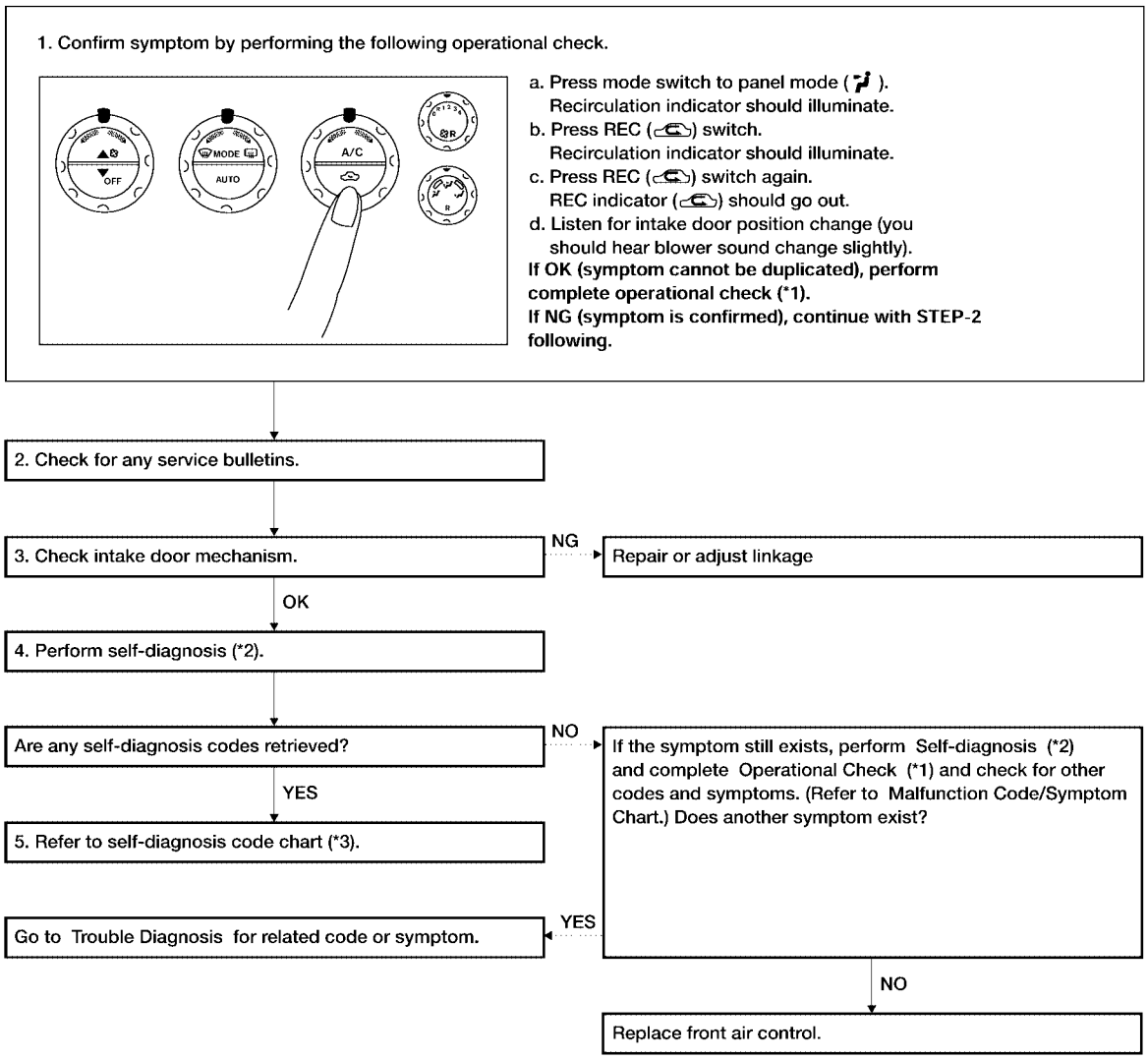

WJIA0431E

*1 ATC-55, "Operational Check (Front)".

*2 ATC-53, "A/C System Self-diagnosis Function".

*3 ATC-54, "SELF-DIAGNOSIS CODE CHART".

SYSTEM DESCRIPTION

Component Parts

Intake door control system components are:

- Front air control
- Intake door motor
- In-vehicle sensor
- Ambient sensor
- Optical sensor
- Intake sensor

System Operation

The intake door control determines the intake door position based on the position of the recirculation switch. When the recirculation switch is depressed the intake door motor rotates closing off the fresh air inlet and recirculating the cabin air. If the recirculation switch is depressed again, the intake door motor rotates in the opposite direction, again allowing fresh air into the cabin.
In the AUTO mode, the front air control determines the intake door position based on the ambient temperature, the intake air temperature and the in-vehicle temperature. When the DEFROST, or OFF switches are pushed or A/C switch is OFF, the front air control sets the intake door at the fresh position.

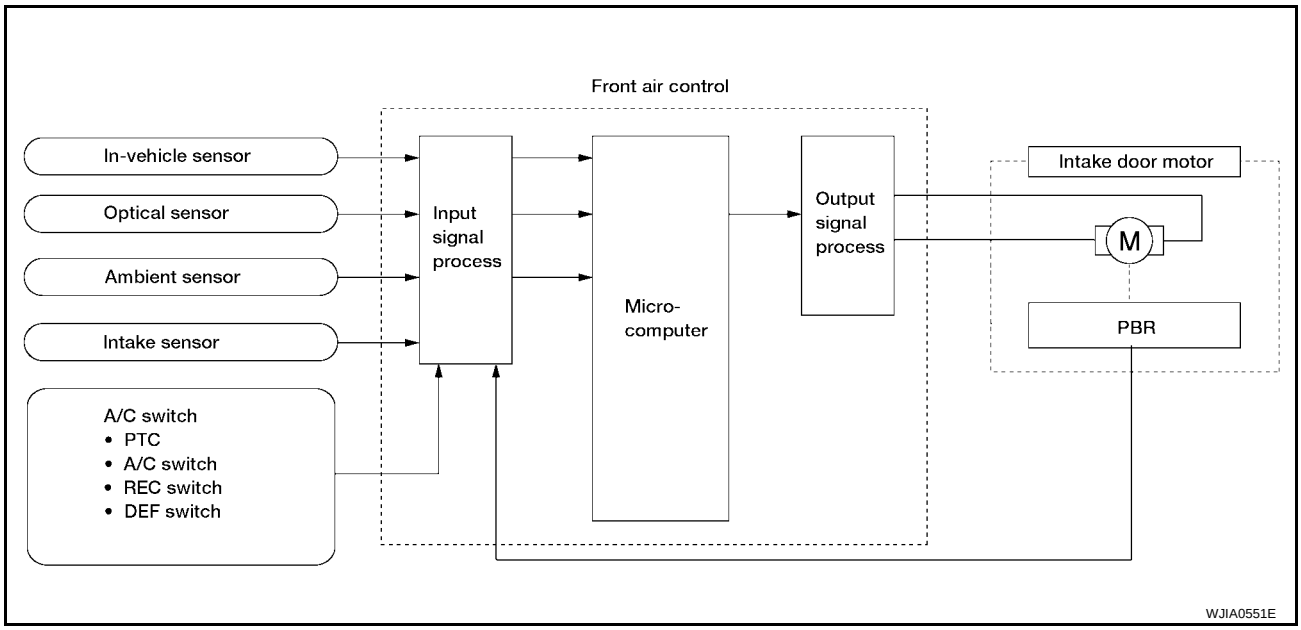

Intake Door Control Specification

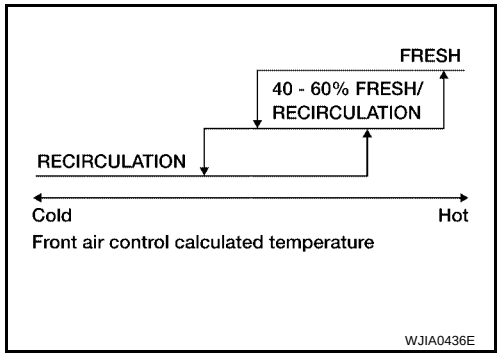

COMPONENT DESCRIPTION

Intake door motor

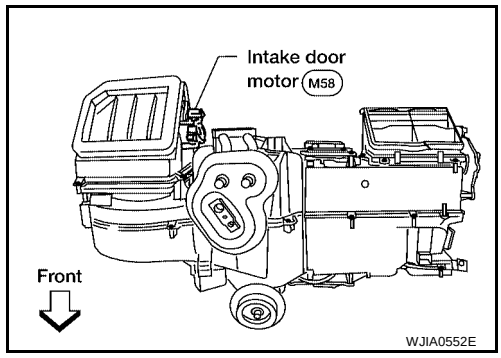

The intake door motor is attached to the intake unit. It rotates so that air is drawn from inlets set by the front air control. Motor rotation is conveyed to a lever which activates the intake door.

DIAGNOSTIC PROCEDURE FOR INTAKE DOOR MOTOR

1. CHECK RESULT FROM FRONT AIR CONTROL SELF-DIAGNOSIS

Self-diagnosis code 72 is present. Refer to ATC-53, "A/C System Self-diagnosis Function" .

YES or NO

YES >> GO TO 2.
NO >> Replace front air control. Refer to ATC-133, "FRONT AIR CONTROL" .

2. CHECK POWER SUPPLY CIRCUIT FOR INTAKE DOOR MOTOR

1. Turn ignition switch OFF.
2. Disconnect front air control connector and intake door motor connector.
3. Check continuity between front air control harness connector M49 terminal 7 (G/B) and intake door motor connector M58 terminal 6 (G/B) and between front air control harness connector M49 terminal 8 (O) and intake door motor connector M58 terminal 1 (O).

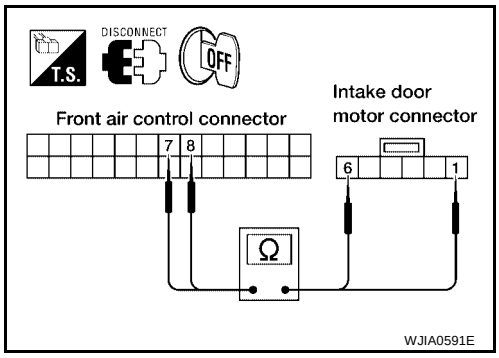

7 - 6	**Continuity should exist.**
8 - 1	**Continuity should exist.**

OK or NG

OK >> Replace intake door motor. Refer to ATC-149, "INTAKE DOOR MOTOR" .
NG >> Repair or replace harness as necessary.

Defroster Door Motor Circuit

EJS001VG

SYMPTOM:

- Defroster door does not change.
- Defroster door motor does not operate normally.

INSPECTION FLOW

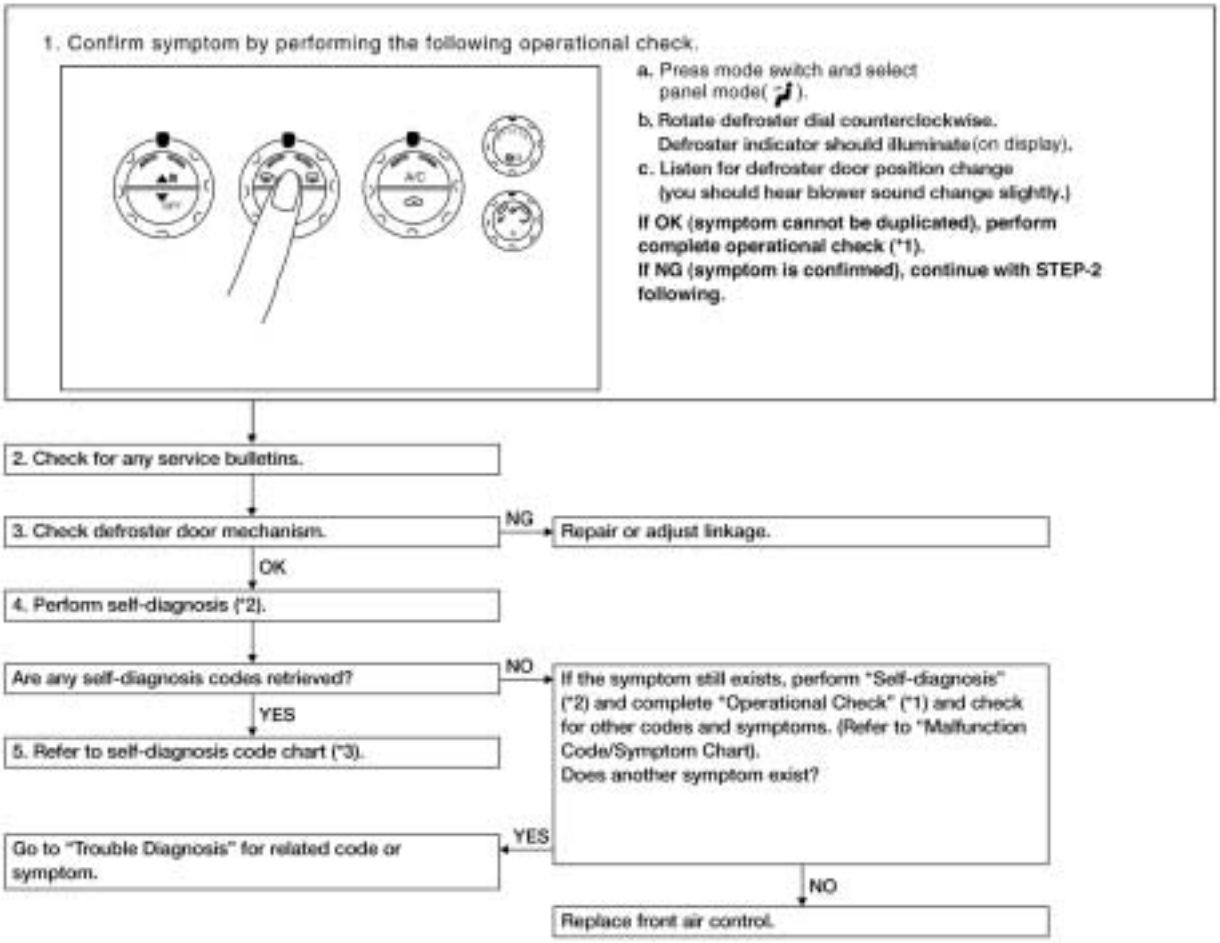

LJIA0062E

*1 ATC-55, "Operational Check (Front)". *2 ATC-53, "A/C System Self-diagnosis Function". *3 ATC-54, "SELF-DIAGNOSIS CODE CHART".

SYSTEM DESCRIPTION

Component Parts

Defroster door control system components are:

- Front air control
- Defroster door motor
- PBR (Built into defroster door motor)
- In-vehicle sensor
- Ambient sensor
- Optical sensor
- Intake sensor

System Operation

The front air control determines defroster door position based on the position of the defroster switch. When the defroster switch is depressed, the defroster door motor rotates directing air to the defroster ducts. When any mode other than defroster is selected, the defroster motor rotates in the opposite direction closing off air flow to the defroster ducts.
In the AUTO mode, the front air control determines defroster door position based on the ambient temperature, the intake air temperature and the in-vehicle temperature.

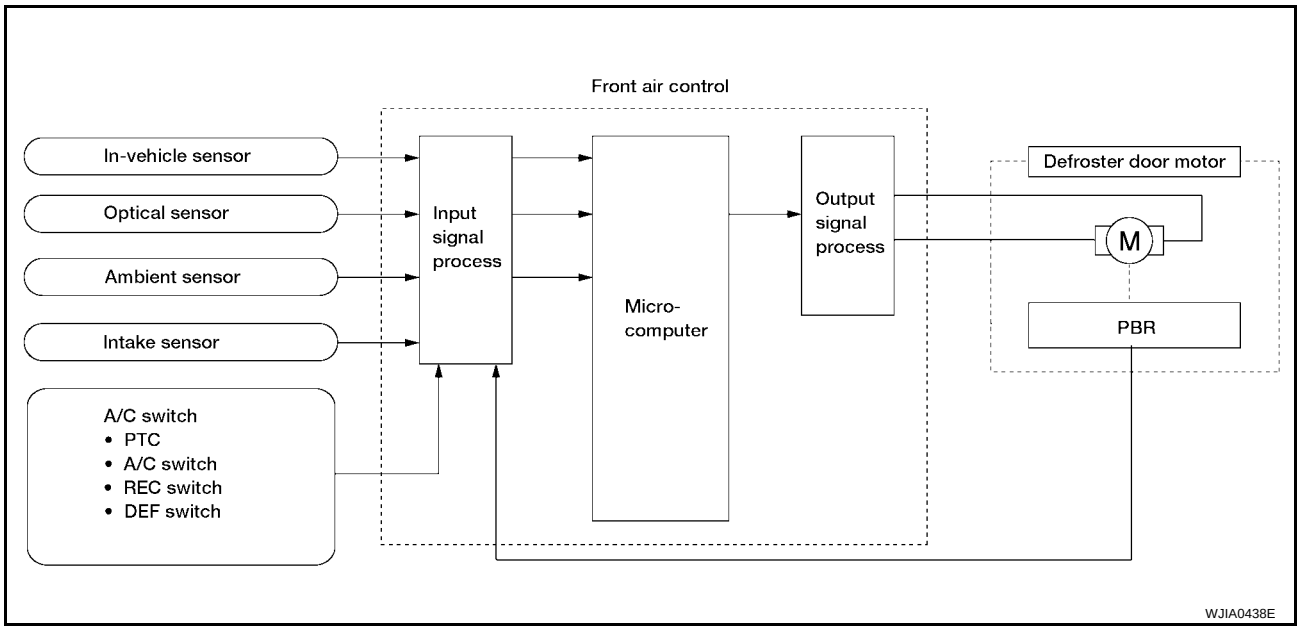

COMPONENT DESCRIPTION

Defroster door motor

The defroster door motor is attached to the front heater & cooling unit. The front air control sends a voltage to rotate to the defroster door directing the air flow either to the defroster ducts, or to the floor ducts, depending on which way the voltage and ground are applied to the motor leads. Motor rotation is conveyed to a lever which activates the defroster door.

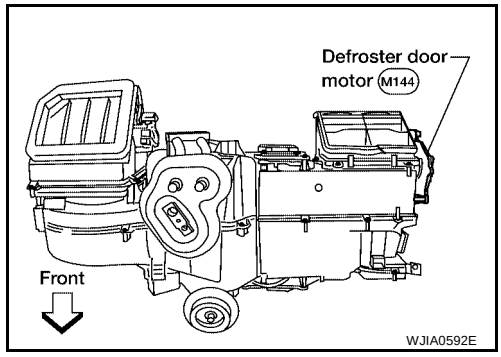

DIAGNOSTIC PROCEDURE FOR DEFROSTER DOOR MOTOR

1. CHECK RESULT FROM FRONT AIR CONTROL SELF-DIAGNOSIS

Self-diagnosis code 62 is present. Refer to ATC-53, "A/C System Self-diagnosis Function" .

YES or NO

YES >> GO TO 2.
NO >> GO TO 3.

2. CHECK POWER SUPPLY CIRCUIT FOR DEFROSTER DOOR MOTOR

1. Turn ignition switch OFF.
2. Disconnect front air control connector and defroster door motor connector.
3. Check continuity between front air control harness connector M49 terminal 19 (LG) and defroster door motor connector M144 terminal 1 (LG) and between front air control harness connector M49 terminal 20 (P/L) and defroster door motor connector M144 terminal 6 (P/L).

19 - 1 : Continuity should exist.
20 - 6 : Continuity should exist.

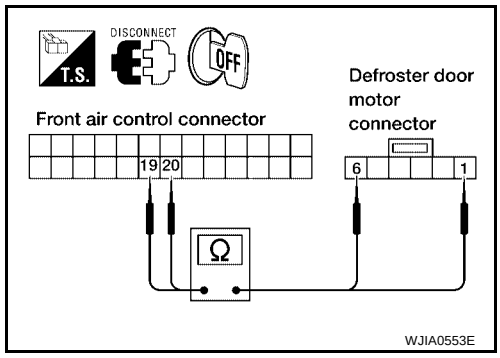

OK or NG

OK >> Replace defroster door motor. Refer to ATC-148, "Removal and Installation" .
NG >> Repair or replace harness as necessary.

3. CHECK PBR REFERENCE SIGNAL VOLTAGE

1. Disconnect the defroster door motor harness connector.
2. Turn ignition switch ON.
3. Check voltage between defroster door motor harness connector M144 terminal 3 (Y) and ground.

3 - Ground : Approx. 5V.

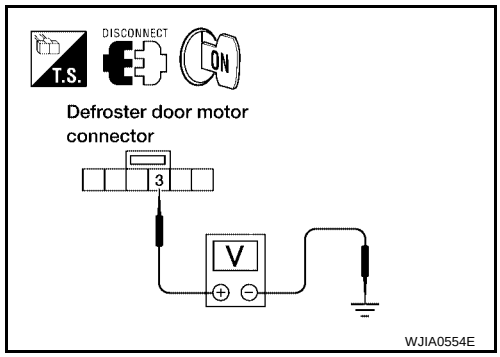

OK or NG

OK >> GO TO 5.
NG >> GO TO 4.

4. CHECK PBR REFERENCE VOLTAGE CIRCUIT BETWEEN DEFROSTER DOOR MOTOR AND FRONT AIR CONTROL

1. Turn ignition switch OFF.
2. Disconnect the front air control connector.
3. Check continuity between defroster door motor harness connector M144 terminal 3 (Y) and front air control harness connector M49 terminal 2 (Y).

3 - 2 : Continuity should exist.

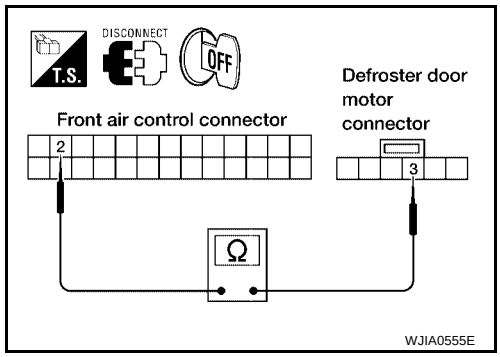

OK or NG

OK >> Replace front air control. Refer to ATC-133, "FRONT AIR CONTROL" .
NG >> Repair or replace harness as necessary.

5. CHECK PBR GROUND REFERENCE CIRCUIT

1. Turn ignition switch OFF.
2. Disconnect the front air control connector.
3. Check continuity between defroster door motor harness connector M144 terminal 2 (P) and front air control harness connector M49 terminal 15 (P).

2 - 15 : Continuity should exist.

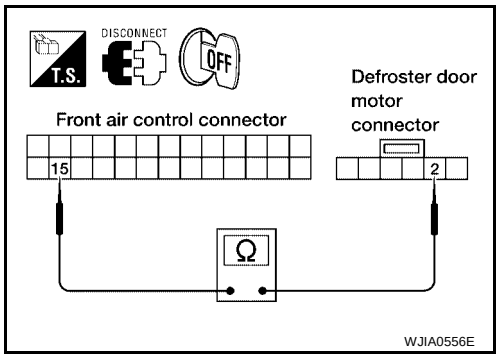

OK or NG

OK >> GO TO 6.
NG >> Repair or replace harness as necessary.

6. CHECK PBR FEEDBACK SIGNAL

1. Reconnect the front air control connector and mode door motor connector.
2. Turn ignition switch ON.
3. Check voltage between front air control harness connector M49 terminal 25 (LG/B) and ground.
4. Change mode between floor, defroster, and panel.

25 - Ground : Approx.0 - 5V

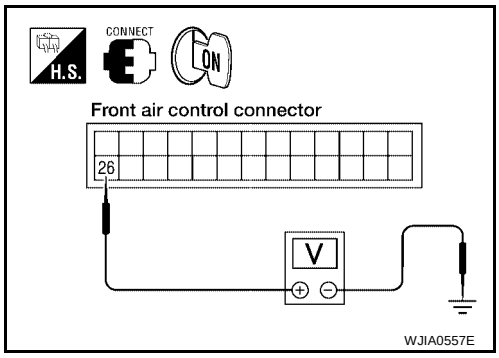

OK or NG

OK >> Replace front air control. Refer toATC-133, "FRONT AIR CONTROL" .
NG >> GO TO 7.

7. CHECK PBR FEEDBACK CIRCUIT

1. Turn ignition switch OFF.
2. Disconnect the defroster door motor connector and front air control connector.
3. Check continuity between defroster door motor harness connector M144 terminal 4 (LG/B) and front air control harness connector M49 terminal 25 (LG/B).

4 - 25 : Continuity should exist.

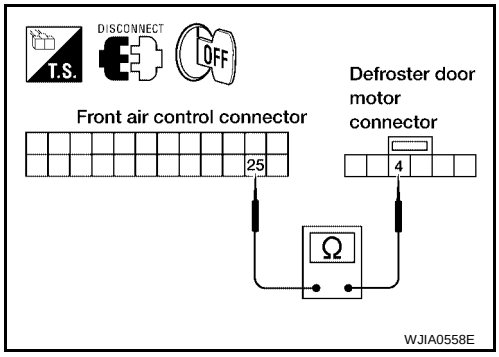

OK or NG

OK >> Replace defroster door motor. Refer to ATC-148, "Removal and Installation" .
NG >> Repair or replace harness as necessary.

Front Blower Motor Circuit

EJS001VH

SYMPTOM:

- Blower motor operation is malfunctioning.
- Blower motor operation is malfunctioning under cold starting conditions.

INSPECTION FLOW

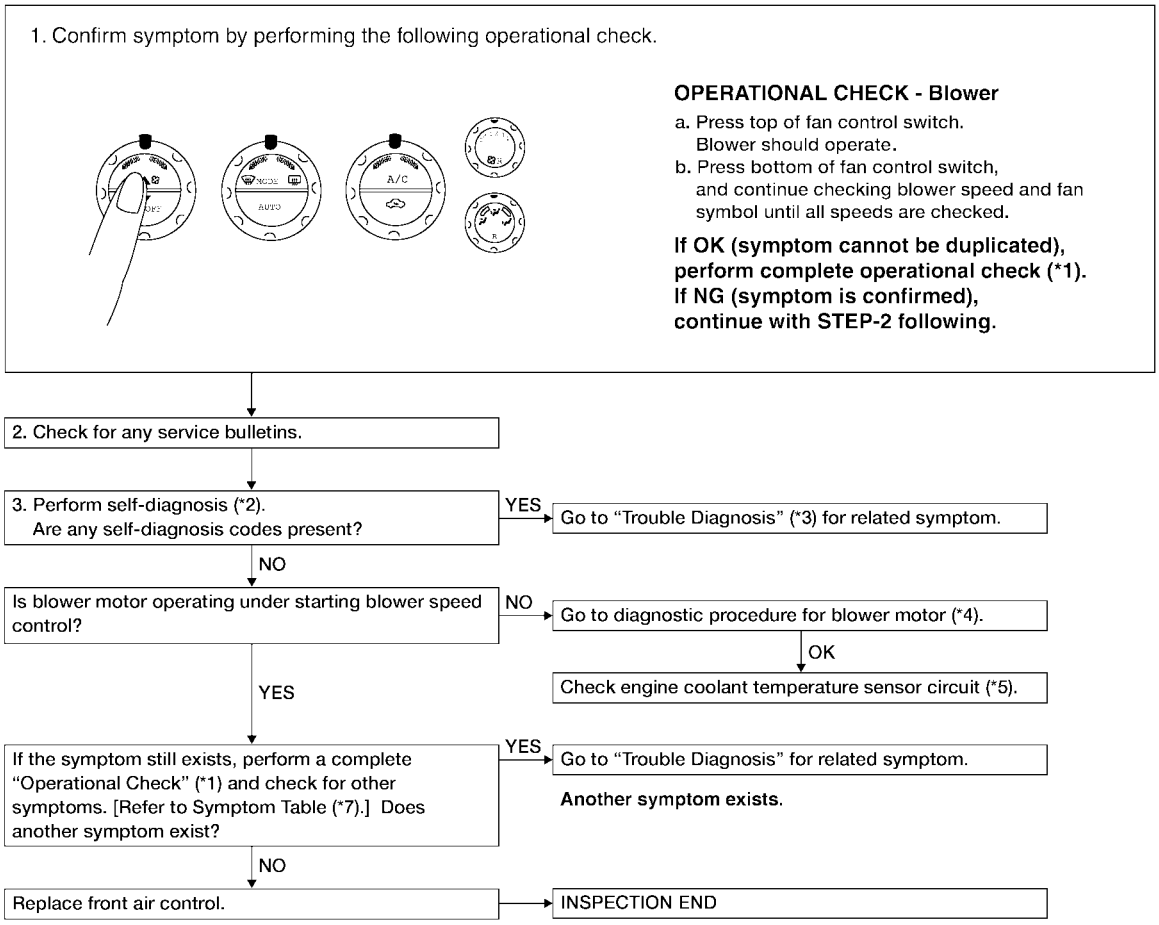

WJIA0439E

*1 .ATC-55, "Operational Check (Front)" .

*2 ATC-53, "A/C System Self-diagnosis Function".

*3 ATC-54, "SELF-DIAGNOSIS CODE CHART".

*4 ATC-83, "DIAGNOSTIC PROCEDURE FOR BLOWER MOTOR".

SYSTEM DESCRIPTION

Component Parts

Blower speed control system components are:

- Front air control
- In-vehicle sensor
- Ambient sensor
- Optical sensor
- Intake sensor

System Operation

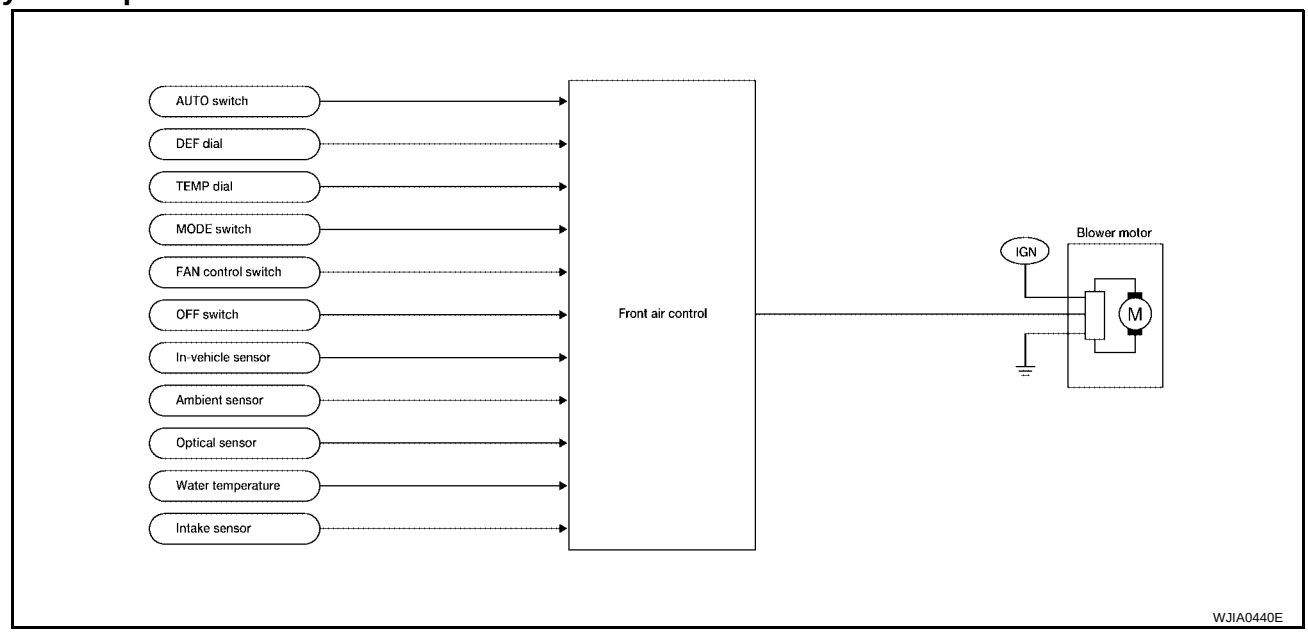

Automatic Mode

In the automatic mode, the blower motor speed is calculated by the front air control and variable blower control based on input from the in-vehicle sensor, optical sensor, intake sensor and ambient sensor, and potentio temperature control (PTC).
When the air flow is increased, the duty ratio of the blower motor's drive signal is changed at 8%/sec. to prevent a sudden increase in air flow.
In addition to manual air flow control and the usual automatic air flow control, starting air flow control, low water temperature starting control and high passenger compartment temperature starting control are available.

Starting Blower Speed Control

Start up from cold soak condition (Automatic mode).
In a cold start up condition where the engine coolant temperature is below 50°C (122°F), the blower will not operate at blower speed 1 for a short period of time (up to 210 seconds). The exact start delay time varies depending on the ambient and engine coolant temperatures.
In the most extreme case (very low ambient temperature) the blower starting delay will be 210 seconds as described above. After the coolant temperature reaches 50°C (122°F), or the 210 seconds has elapsed, the blower speed will increase to the objective blower speed.

Start up from normal operating or hot soak condition (Automatic mode).
The blower will begin operation momentarily after the AUTO switch is pushed. The blower speed will gradually rise to the objective speed over a time period of 3 seconds or less (actual time depends on the objective blower speed).

Blower Speed Compensation - Sunload

When the in-vehicle temperature and the set temperature are very close, the blower will be operating at low speed. The speed will vary depending on the sunload. During conditions of low or no sunload, the blower operates at low speed. During high sunload conditions, the front air control causes the blower speed to increase.

Blower Speed Control Specification

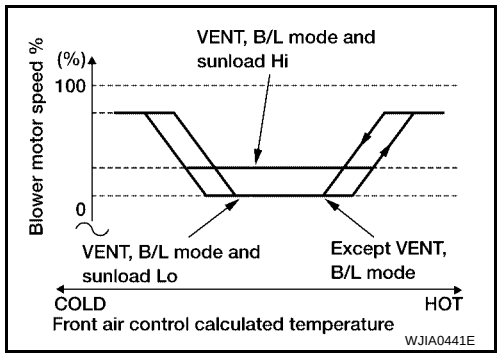

COMPONENT DESCRIPTION

Variable Blower Control

The variable blower control is located on the cooling unit. The variable blower control receives a gate voltage from the front air control to steplessly maintain the blower motor voltage in the 0 to 5 volt range (approx.).

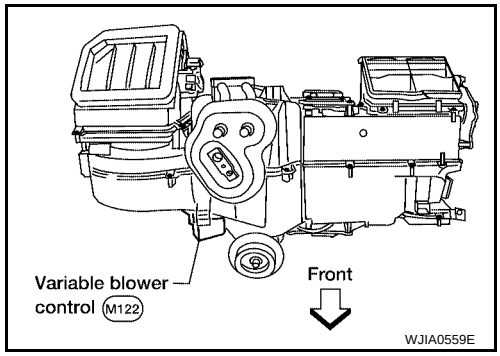

DIAGNOSTIC PROCEDURE FOR BLOWER MOTOR

SYMPTOM: Blower motor operation is malfunctioning under starting blower speed control.

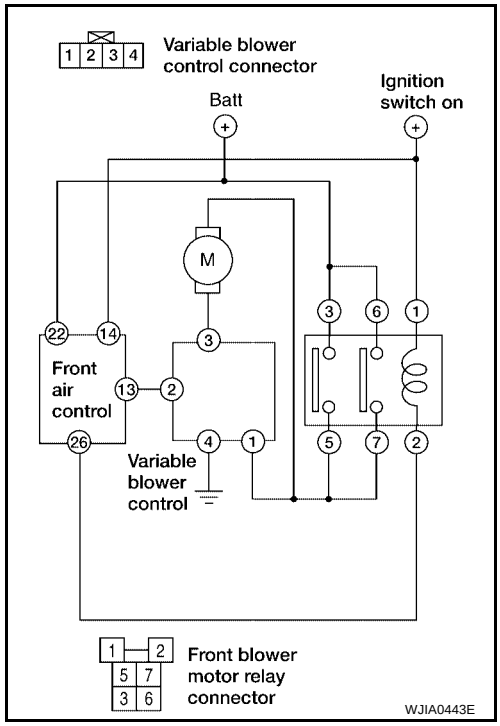

1. CHECK FUSES

Check 20A fuses [No. 24 and 27 (Located in the fuse and fusible link box)]. For fuse layout. Refer to PG-75, "FUSE AND FUSIBLE LINK BOX" .

Fuses are good.

OK or NG

OK >> GO TO 2.
NG >> GO TO 10.

2. CHECK FRONT BLOWER MOTOR POWER SUPPLY CIRCUIT

1. Turn ignition switch OFF.
2. Disconnect front blower motor connector.
3. Press the mode switch to select any mode except off.
4. Set blower control switch to high.
5. Check voltage between front blower motor harness connector M62 terminal 2 (W/L) and ground.

2 - Ground : Battery voltage.

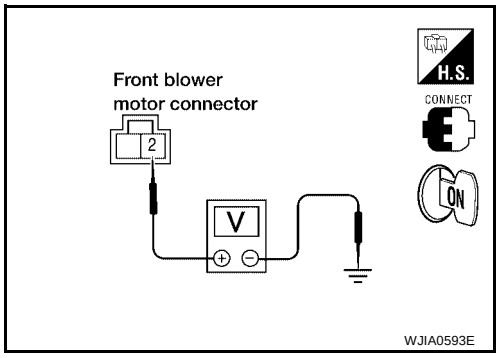

OK or NG

OK >> GO TO 12.
NG >> GO TO 3.

3. CHECK FRONT BLOWER MOTOR RELAY (SWITCH SIDE) POWER SUPPLY CIRCUIT

1. Turn ignition switch OFF.
2. Disconnect front blower motor relay.
3. Check voltage between front blower motor relay harness connector M107 terminals 5 (G/R) and 7 (P) and ground.

5, 7 - Ground : Battery voltage.

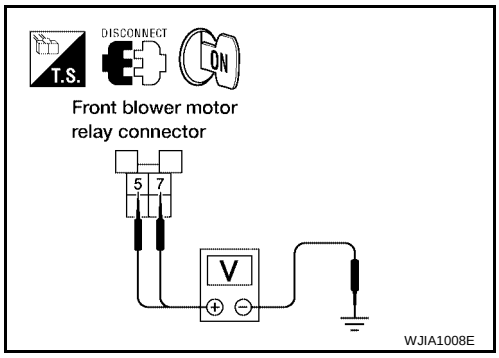

OK or NG

OK >> GO TO 4.
NG >> Repair harness or connector.

4. CHECK FRONT BLOWER MOTOR RELAY

Refer to ATC-87, "Front Blower Motor Relay" .

OK or NG

OK >> GO TO 5.
NG >> Replace front blower motor relay.

5. CHECK FRONT BLOWER MOTOR RELAY (SWITCH SIDE) CIRCUIT FOR OPEN

1. Turn ignition switch OFF.
2. Disconnect blower motor relay connector and front blower motor connector.
3. Check continuity between front blower motor relay harness connector M107 terminals 3 (W/L) and 6 (W/L)
and front blower motor harness connector M62 terminal 2 (W/L).

3, 6 - 2 : Continuity should exist.

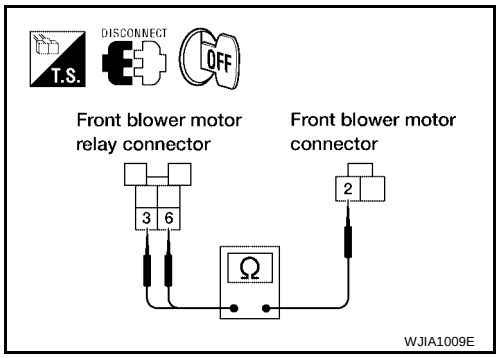

OK or NG

OK >> GO TO 6.
NG >> Repair harness or connector.

6. CHECK VARIABLE BLOWER CONTROL POWER SUPPLY CIRCUIT FOR OPEN

1. Disconnect variable blower control harness connector.
2. Check continuity between front blower motor relay harness connector M107 terminals 3 (W/L) and 6 (W/L) and variable blower control harness connector M122 terminal 1 (W/L).

3, 6 - 1 : Continuity should exist.

OK or NG

OK >> GO TO 7.
NG >> Repair harness or connector.

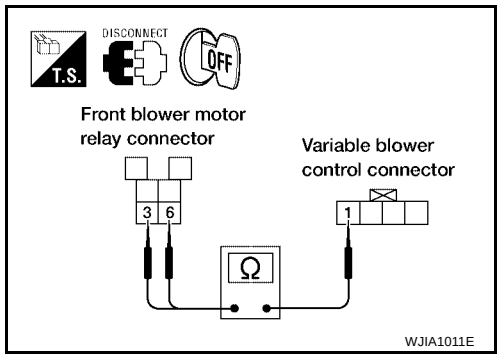

7. CHECK VARIABLE BLOWER CONTROL SIGNAL CIRCUIT

1. Disconnect front air control connector.
2. Check continuity between front air control connector M49 terminal 13 (G/R) and variable blower control connector M122 terminal 2 (G/R).

13 - 2 : Continuity should exist.

OK or NG

OK >> GO TO 8.
NG >> Repair harness or connector.

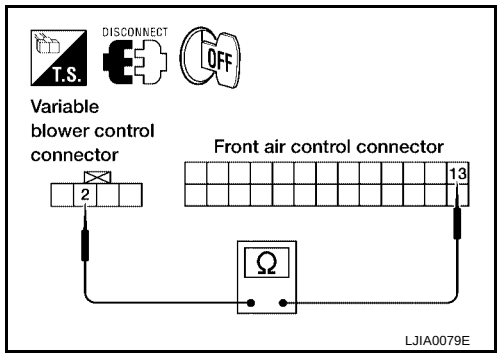

8. CHECK FRONT BLOWER MOTOR RELAY (COIL SIDE) POWER SUPPLY

1. Turn ignition switch ON.
2. Check voltage between front blower motor relay connector M107 terminal 1 (Y/G) and ground.

1 - Ground : Battery voltage.

OK or NG

OK >> GO TO 9.
NG >> Repair harness or connector.

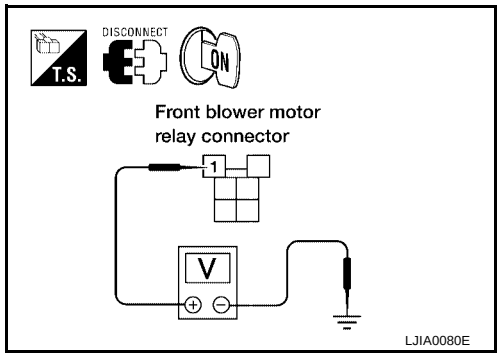

9. CHECK FRONT BLOWER MOTOR RELAY (COIL SIDE) GROUND CIRCUIT

1. Turn ignition switch OFF.
2. Check continuity between front blower motor relay connector M107 terminal 2 (R/B) and front air control harness connector M49 terminal 26 (R/B).

2 - 26 : Continuity should exist.

OK or NG

OK >> Replace front air control. Refer to ATC-133, "FRONT AIR CONTROL" .
NG >> Repair harness or connector.

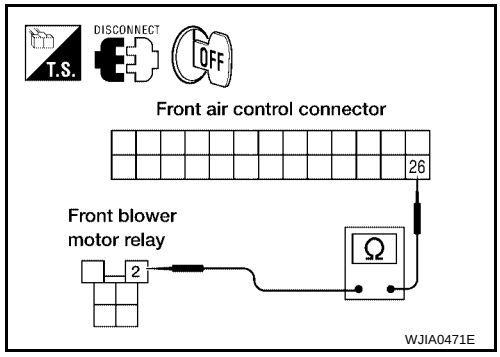

10. REPLACE FUSES

1. Replace fuses.
2. Activate the front blower motor.
3. Do fuses blow?

YES or NO

YES >> GO TO 11.
NO >> Inspection End.

11. CHECK FRONT BLOWER MOTOR POWER SUPPLY CIRCUIT FOR SHORT

1. Turn ignition switch OFF.
2. Disconnect front blower motor connector and variable blower control connector.
3. Check continuity between variable blower control harness connector M122 terminal 1 (W/L) and ground.

1 - Ground. : Continuity should not exist.

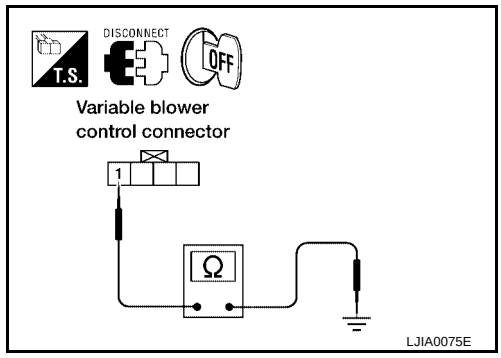

OK or NG

OK >> GO TO 12.
NG >> Repair harness or connector.

12. CHECK VARIABLE BLOWER CONTROL SIGNAL CIRCUIT

1. Disconnect front air control connector.
2. Check continuity between front air control connector M49 terminal 13 (G/R) and variable blower control connector M122 terminal 2 (G/R).

13 - 2 : Continuity should exist.

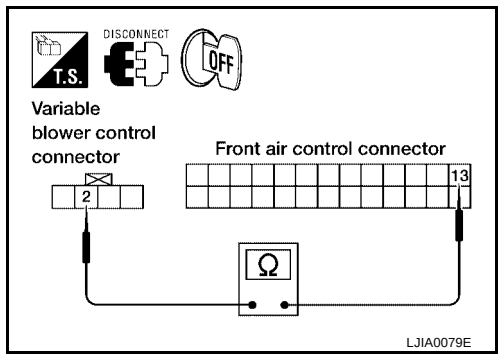

OK or NG

OK >> Check blower motor, if OK replace variable blower control. Refer to ATC-87, "Front Blower Motor" .
NG >> Repair harness or connector.

COMPONENT INSPECTION

Front Blower Motor Relay

Check continuity between terminals by supplying 12 volts and ground to coil side terminals of relay.

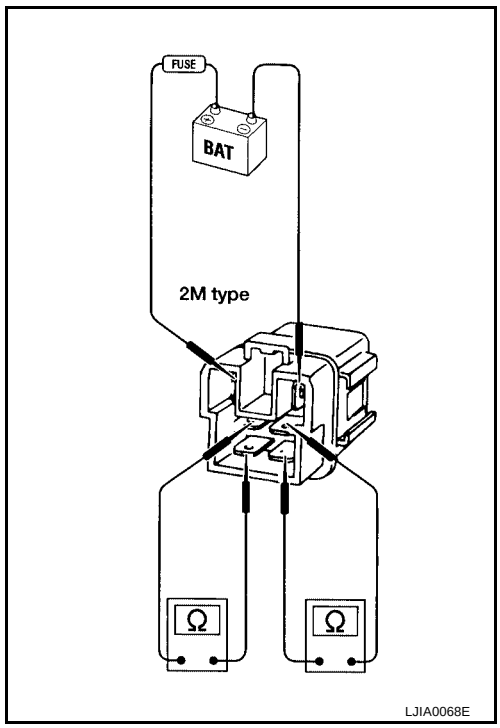

Front Blower Motor

Confirm smooth rotation of the blower motor.

- Ensure that there are no foreign particles inside the blower unit.
- Apply 12 volts to terminal + and ground to terminal - and verify that the motor operates freely and quietly.

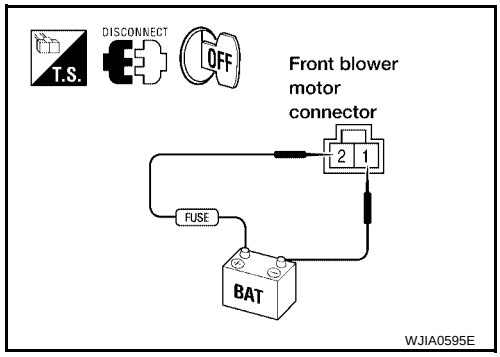

Rear Blower Motor Circuit

EJS001VI

SYMPTOM:

- Blower motor operation is malfunctioning.

INSPECTION FLOW

1. Confirm symptom by performing the following operational check.

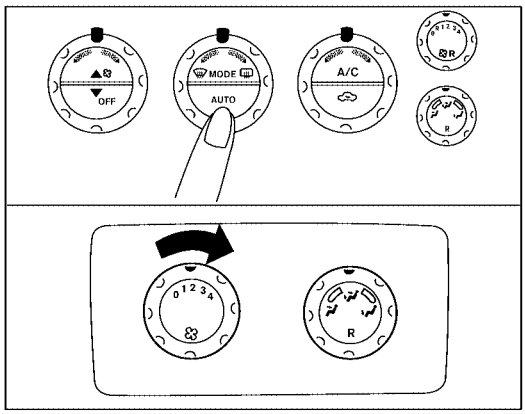

OPERATIONAL CHECK – Rear blower motor

1) Press any mode switch except OFF.
2) Set the rear fan switch (front) to REAR position.
3) Turn the rear fan switch (rear) and check for rear blower operation.
4) Continue checking that rear blower speed increases as the rear fan switch (rear) is rotated clockwise.

If OK (symptom cannot be duplicated), perform complete operational check (*1).
If NG (symptom is confirmed), continue with Step 2 following.

↓

2. Check for any Service bulletins.

↓ OK

3. Check rear fan switch (front) circuit. (*2)

↓ OK

4. If the symptom still exists, perform a complete "Operational Check" (*1) and check for other symptoms. [Refer to "SYMPTOM TABLE ", (*3).] Does another symptom exist?

→ Yes → Go to Trouble Diagnosis for related symptom.

[Another symptom exists.]

↓ No

INSPECTION END.

LJIA0095E

*1 ATC-58, "Operational Check (Rear)" *2 ATC-97, "Rear Blower Switch (Front)" *3 ATC-35, "SYMPTOM TABLE"

SYSTEM DESCRIPTION

Component Parts

Rear blower speed control system components are:

- Front air control
- Rear blower switch (front)
- Rear blower switch (rear)
- Rear blower motor resistor
- Rear blower motor
- Rear blower motor relay

System Operation

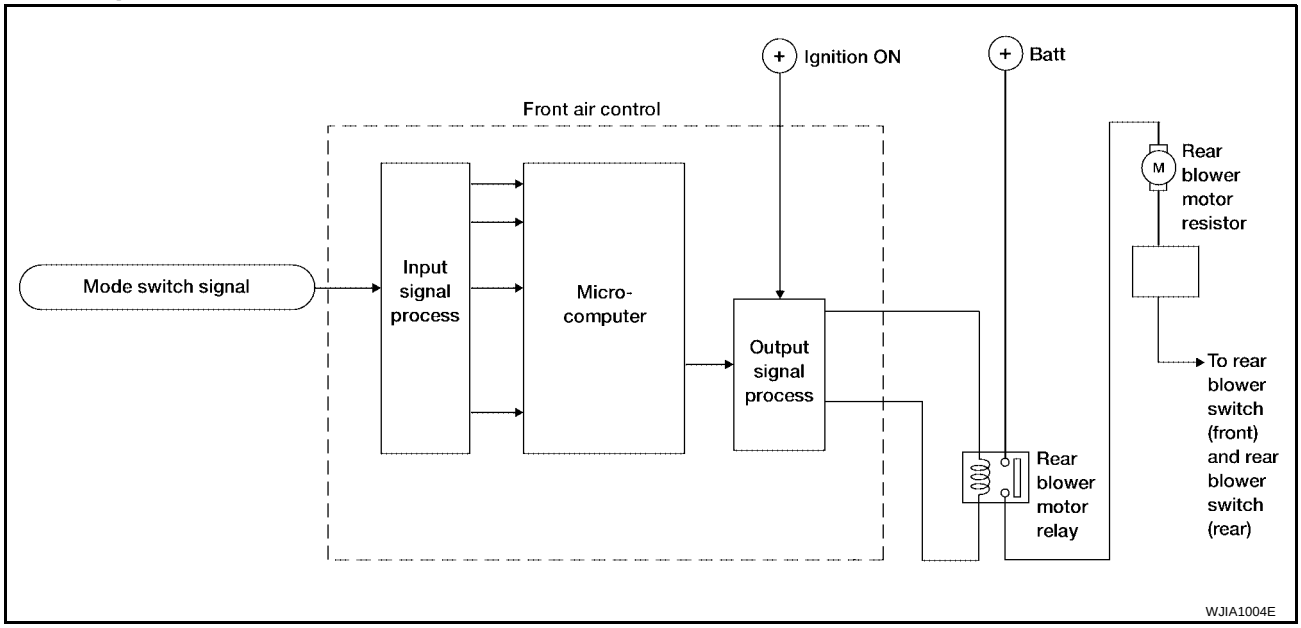

Rear Blower Control

When the rear blower switch (front) is in the OFF position, the rear blower motor cannot operate.
When the rear blower switch (front) is in the REAR position, it allows the rear blower switch (rear) to control the rear blower motor speed. In any other position (1-4), the rear blower switch (front) controls the rear blower motor speed regardless of the rear blower switch (rear) position.

DIAGNOSTIC PROCEDURE FOR REAR BLOWER MOTOR

Rear Blower Switch (Rear) Circuit

SYMPTOM:

- Rear blower motor does not rotate when rear blower switch (front) is set to REAR position.

1. CHECK REAR BLOWER MOTOR OPERATION

Blower motor rotates normally when rear blower switch (front) is set at 1 - 4 speed.

OK or NG

OK >> GO TO 2.
NG >> Refer to ATC-91, "Trouble Diagnosis Procedure For Rear Blower Motor (1 - 4 Speed)" .

2. CHECK REAR BLOWER SWITCH (FRONT)

Refer to ATC-97, "Rear Blower Switch (Front)" .

OK or NG

OK >> GO TO 3.
NG >> Replace rear blower switch (front).

3. CHECK REAR BLOWER SWITCH (REAR)

Refer to ATC-97, "Rear Blower Switch (Rear)" .

OK or NG

OK >> GO TO 4.
NG >> Replace rear blower switch (rear). Refer to ATC-133, "REAR AIR CONTROL" .

4. CHECK CIRCUIT CONTINUITY

1. Turn ignition switch OFF.
2. Disconnect rear blower switch (front) connector and rear blower switch (rear) connector.
3. Check voltage between rear blower switch (front) harness connector M52 terminal 2 (BR) and rear blower switch (rear) harness connector R208 terminal 10 (BR).

2 - 10 : Continuity should exist.

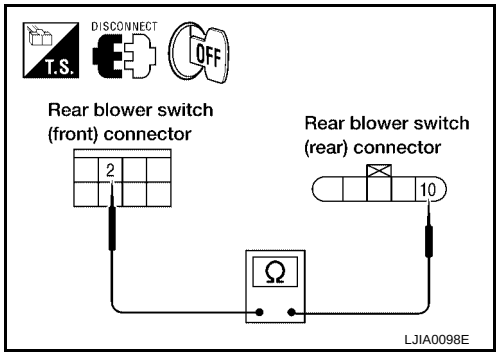

OK or NG

OK >> Inspection End.
NG >> Repair harness or connector.

Trouble Diagnosis Procedure For Rear Blower Motor (1 - 4 Speed)

SYMPTOM:

- Rear blower motor does not rotate when rear blower switch (front) is set at 1 - 4 speed.

Inspection Flow

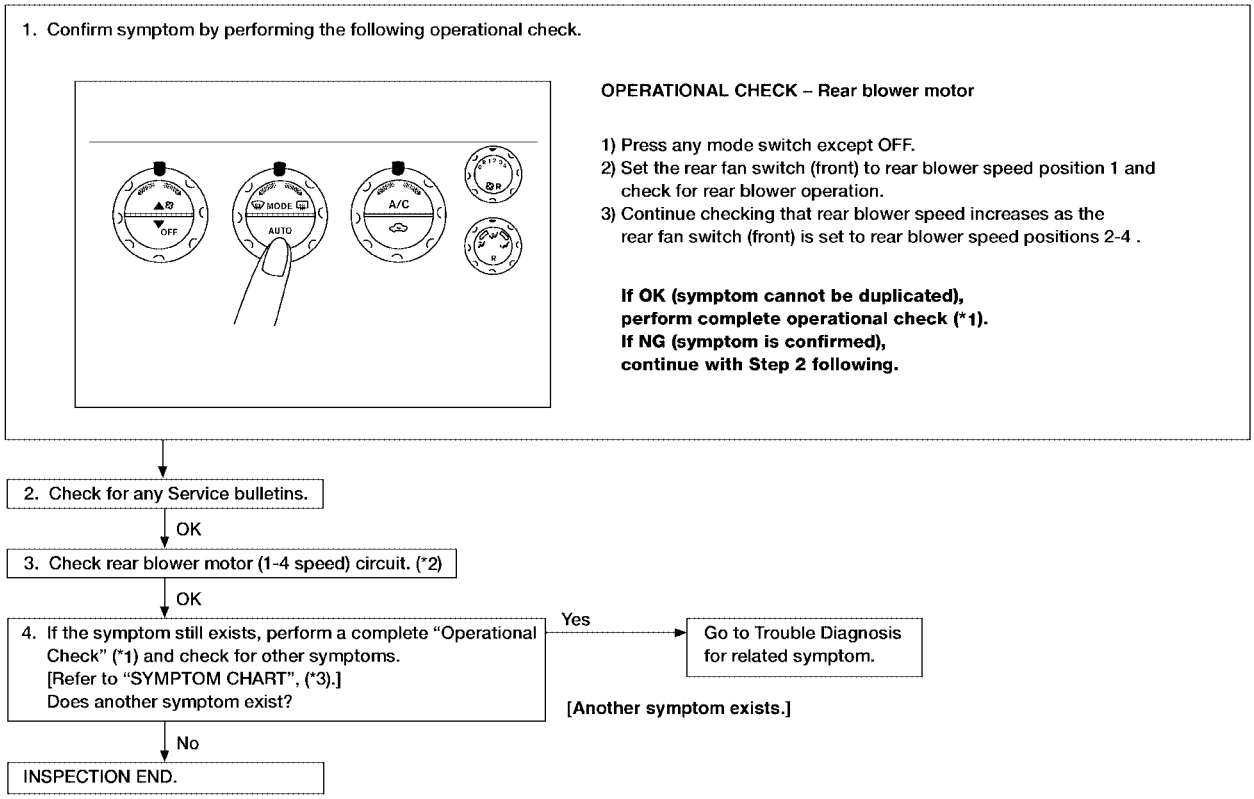

LJIA0097E

*1 .ATC-58, "Operational Check (Rear)" .

*2 ATC-91, "Trouble Diagnosis Procedure For Rear Blower Motor (1 - 4 Speed)"

*3 ATC-35, "SYMPTOM TABLE"

1. DIAGNOSTIC PROCEDURE

Blower motor rotates normally at each speed.

OK or NG

OK >> Inspection End.
NG >> 1. Does not rotate at any speed, GO TO 2.
2. Does not rotate at 1 - 3 speed, GO TO 13.
3. Does not rotate at 4 speed, GO TO 18.

2. CHECK FUSES

Check 15A fuses [Nos. 10 and 11, located in the fuse block (J/B)]. Refer to PG-74, "FUSE BLOCK-JUNCTION BOX(J/B)" .

OK or NG

OK >> GO TO 3.
NG >> GO TO 8.

3. CHECK REAR BLOWER MOTOR POWER SUPPLY

1. Turn ignition switch OFF.
2. Disconnect rear blower motor connector.
3. Select any rear blower speed except OFF.
4. Turn ignition switch ON.
5. Check voltage between rear blower motor harness connector B134 terminal 2 (L/R) and ground.

2 - Ground : Battery voltage.

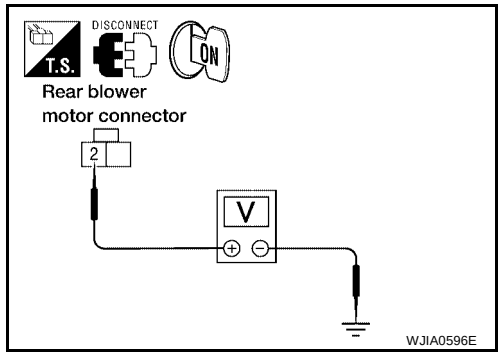

OK or NG

OK >> GO TO 11.
NG >> GO TO 4.

4. CHECK REAR BLOWER MOTOR RELAY

Refer to ATC-97, "Rear Blower Motor Relay" .

OK or NG

OK >> GO TO 5.
NG >> Replace rear blower motor relay.

5. CHECK REAR BLOWER MOTOR POWER FROM RELAY TO REAR BLOWER MOTOR

1. Turn ignition switch OFF.
2. Reconnect rear blower motor connector.
3. Disconnect rear blower motor relay J1.
4. Turn ignition switch ON.
5. Set rear blower switch (front) to any position except OFF, REAR, or 4 - speed.
6. Momentarily (no more than 4 seconds), connect a jumper wire between rear blower motor relay connector J1 (harness side) terminals 3 and 5.

Rear blower motor should rotate.

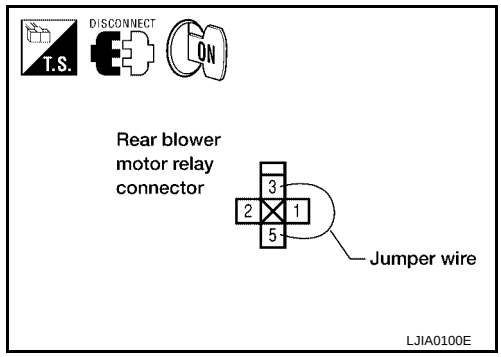

OK or NG

OK >> GO TO 6.
NG >> GO TO 10.

6. CHECK REAR BLOWER MOTOR RELAY (COIL SIDE) POWER SUPPLY CIRCUIT

1. Turn ignition switch OFF.
2. Disconnect fuse block (J/B) connector.
3. Turn ignition switch ON.
4. Set rear blower switch (front) to any position except OFF, REAR, or 4 - speed.
5. Check voltage between fuse block (J/B) harness connector M39 terminal 3Q (W/L) and ground.

3Q - Ground : Battery voltage.

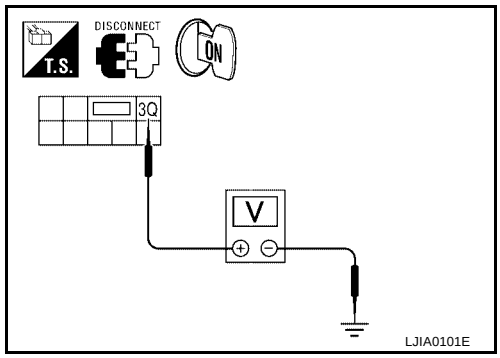

OK or NG

OK >> GO TO 7.
NG >> GO TO 20.

7. CHECK REAR BLOWER MOTOR RELAY (COIL SIDE) GROUND CIRCUIT

1. Turn ignition switch OFF.
2. Check continuity between fuse block (J/B) harness connector M3 terminal 7N (B) and ground.

7N - Ground : Continuity should exist.

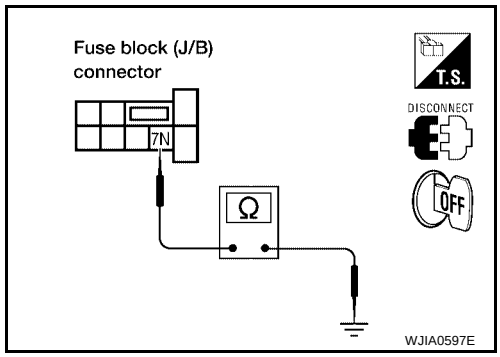

OK or NG

OK >> Replace fuse block (J/B).
NG >> Repair harness or connector.

8. REPLACE FUSE

Refer to PG-74, "FUSE BLOCK-JUNCTION BOX(J/B)"
Fuse should not open when rear blower motor is activated.

OK or NG

OK >> Inspection End.
NG >> GO TO 9.

9. CHECK REAR BLOWER MOTOR POWER SUPPLY CIRCUIT FOR SHORT

1. Turn ignition switch OFF.
2. Disconnect battery cables and rear blower motor connector.
3. Check continuity between rear blower motor harness connector B134 terminal 2 (L/R) and ground.

2 - Ground : Continuity should not exist.

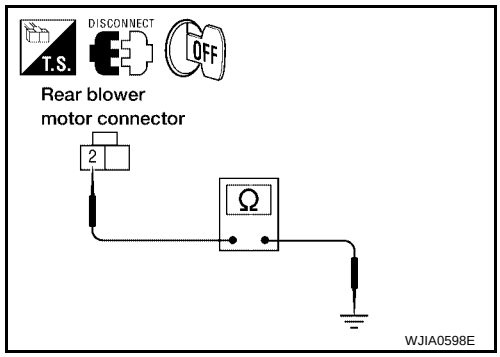

OK or NG

OK >> Check rear blower motor. Refer to ATC-98, "Rear Blower Motor" .
NG >> Repair harness or connector.

10. CHECK REAR BLOWER MOTOR RELAY (SWITCH SIDE) POWER SUPPLY CIRCUIT

1. Turn ignition switch OFF.
2. Disconnect fuse block (J/B) and rear blower motor connectors.
3. Check continuity between fuse block (J/B) harness connector M3 terminal 3N (SB) and 8N (L/R) and rear blower motor harness connector B134 terminal 2 (L/R).

3N, 8N - 2 : Continuity should exist.

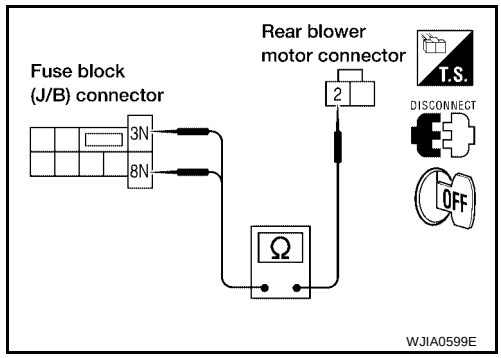

OK or NG

OK >> GO TO 20.
NG >> Repair harness or connector.

11. CHECK REAR BLOWER MOTOR

Refer to ATC-98, "Rear Blower Motor" .

OK or NG

OK >> GO TO 12.
NG >> Replace rear blower motor. refer to ATC-139, "REAR BLOWER MOTOR"

12. CHECK REAR BLOWER SWITCH (FRONT)

Refer to ATC-97, "Rear Blower Switch (Front)" .

OK or NG

OK >> GO TO 15.
NG >> Replace rear blower switch (front).

13. CHECK REAR BLOWER MOTOR RESISTOR

Refer to ATC-98, "Rear Blower Motor Resistor" .

OK or NG

OK >> GO TO 14.
NG >> Replace rear blower motor resistor.

14. CHECK REAR BLOWER SWITCH (FRONT) CIRCUIT

1. Turn ignition switch OFF.
2. Disconnect rear blower switch (front) M52.
3. Turn ignition switch ON.
4. Reconnect rear blower motor resistor harness connector B133.
5. Check voltage between each rear blower switch (front) connector M52 terminals 3 (LG), 7 (W/L), and 8 (G), and ground.

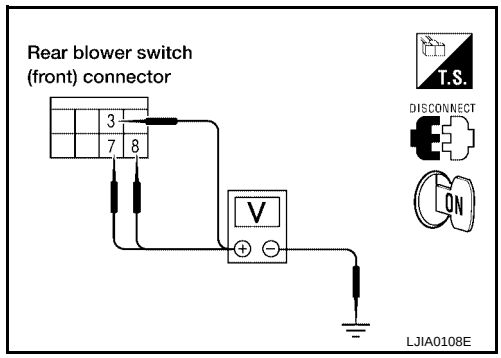

Terminal No.		Voltage
(+)	(-)	
3	Ground	Approx. 12V
7		
8		

OK or NG

OK >> GO TO 17.
NG >> GO TO 16.

15. CHECK REAR BLOWER MOTOR GROUND CIRCUIT TO REAR BLOWER MOTOR RESISTOR

1. Turn ignition switch OFF.
2. Disconnect rear blower motor and rear blower motor resistor connectors.
3. Check continuity between rear blower motor connector B134 terminal 1 (L/B) and rear blower motor resistor harness connector B133 terminal 3 (L/B).

   1 - 3 : Continuity should exist.

4. Check continuity between rear blower motor connector B134 terminal 1 (L/B) and ground.

   1 - Ground : Continuity should not exist.

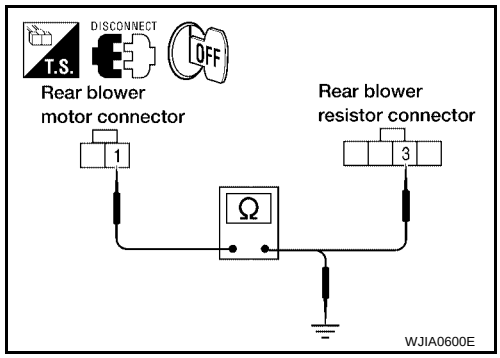

OK or NG

OK >> GO TO 16.
NG >> Repair harness or connector.

16. CHECK REAR BLOWER SWITCH (FRONT) CIRCUIT

1. Turn ignition switch OFF.
2. Disconnect rear blower motor resistor connector.
3. Check continuity between rear blower switch (front) connector M52 terminals 3 (LG), 7 (W/L), and 8 (G), and rear blower motor resistor connector B133 terminals 1 (LG), 4 (W/L), and 2 (G).

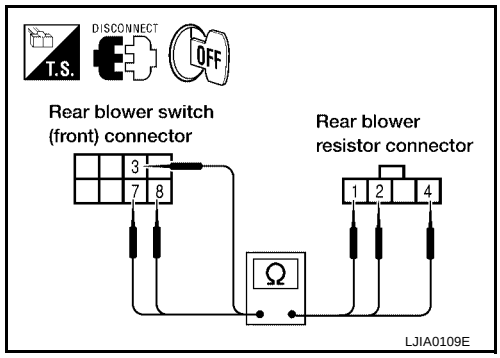

Terminal No.		Continuity
Rear blower switch (front)	Rear blower motor resistor	
3	1	Should exist
7	4	
8	2	

OK or NG

OK >> Inspection End.
NG >> Repair harness or connector.

17. CHECK REAR BLOWER SWITCH (FRONT) CIRCUIT

1. Turn ignition switch OFF.
2. Disconnect rear blower switch (rear) connectors.
3. Check continuity between rear blower switch (front) connector M52 terminals 3 (LG), 5 (L/B), 7 (W/L), and 8 (G), and rear blower switch (rear) connector R203 terminals 9 (LG), 6 (L/B), 8 (W/L), and 7 (G).

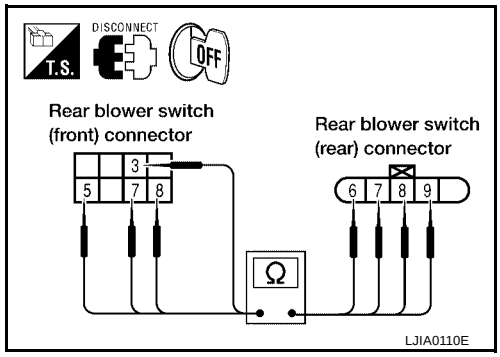

Terminal No.		Continuity
Rear blower switch (front)	Rear blower switch (rear)	
3	9	Should exist
5	6	
7	8	
8	7	

OK or NG

OK >> GO TO 18.
NG >> Repair harness or connector.

18. CHECK REAR BLOWER SWITCH (FRONT)

Refer to ATC-97, "Rear Blower Switch (Front)" .

OK or NG

OK >> GO TO 19.
NG >> Replace rear blower switch (front).

19. CHECK REAR BLOWER SWITCH (REAR)

Refer to ATC-97, "Rear Blower Switch (Rear)" .

OK or NG

OK >> Inspection End.
NG >> Replace rear blower switch (rear).

20. CHECK CIRCUIT BETWEEN FRONT AIR CONTROL AND FUSE BLOCK (J/B) [REAR BLOWER MOTOR RELAY (COIL SIDE) POWER]

1. Disconnect front air control and fuse block (J/B) connectors M39.
2. Check continuity between front air control harness connector M50 terminal 38 (W/L) and fuse block (J/B) connector M39 terminal 3Q (W/L).

Continuity should exist.

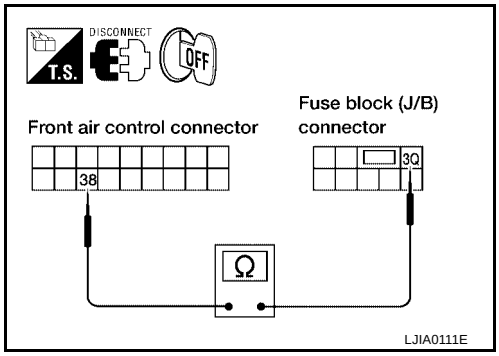

OK or NG

OK >> Replace front air control.
NG >> Repair harness or connector.

COMPONENT INSPECTION

Rear Blower Motor Relay

Check circuit continuity between terminals by supplying 12 volts and ground to coil side terminals of relays.

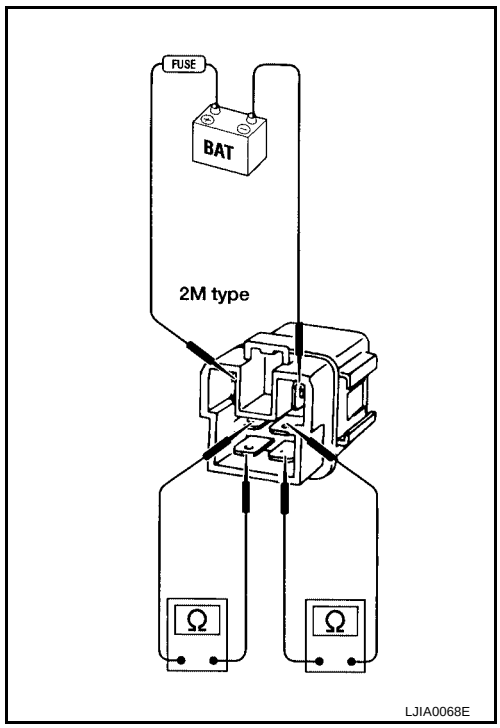

Rear Blower Switch (Rear)

Check continuity between terminals at each switch position.

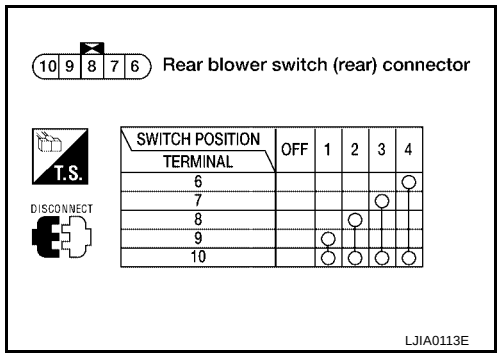

SWITCH POSITION / TERMINAL	OFF	1	2	3	4
6					○
7				○	
8			○		
9		○			
10		○	○	○	○

Rear Blower Switch (Front)

Check continuity between terminals at each switch position.

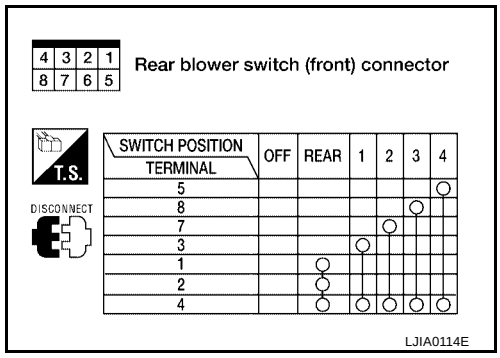

SWITCH POSITION / TERMINAL	OFF	REAR	1	2	3	4
5						○
8					○	
7				○		
3			○			
1		○				
2		○				
4		○	○	○	○	○

Rear Blower Motor

Check that there are no foreign particles inside the intake unit.
Apply 12 volts to terminal 2 and ground to terminal - and ensure that the blower motor rotates freely and quietly.

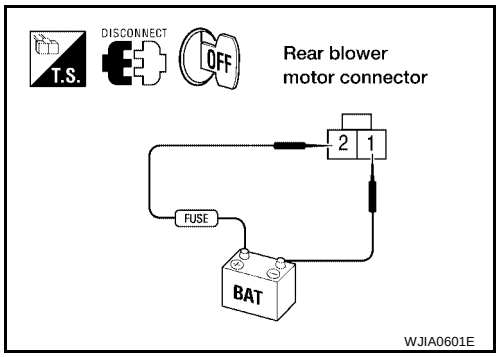

Rear Blower Motor Resistor

Check continuity between terminals. There will be resistance, but there should not be an open or short between any two terminals.

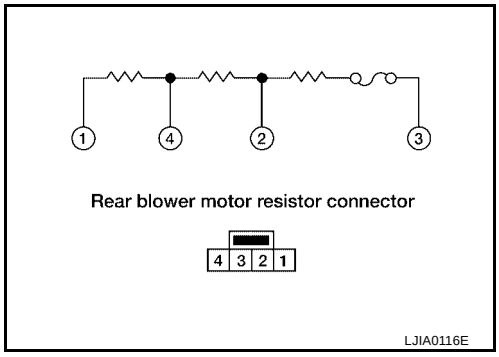

Rear Air Control Circuit

EJS001VJ

SYMPTOM:

- Temperature cannot be adjusted from the rear air control.

INSPECTION FLOW

1. Confirm symptom by performing the following operational check.

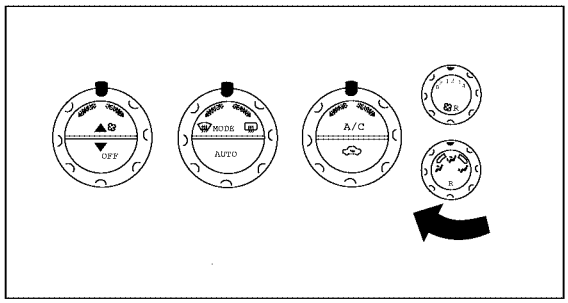

OPERATIONAL CHECK

Temperature increase

a. Turn the temperature dial clockwise.
b. Check for hot air at rear floor discharge air outlets.

Temperature decrease

a. Turn the temperature dial counterclockwise.
b. Check for cold air at rear vent discharge air outlets.

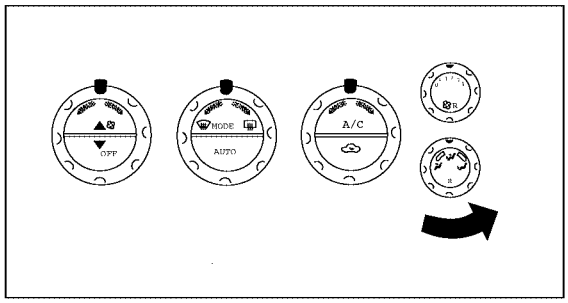

If OK (symptom cannot be duplicated), perform complete operational check (*1).
If NG (symptom is confirmed), continue with STEP-2 following.

2. Check for any service bulletins.

3. Perform self-diagnosis (*2), are any self-diagnosis codes retrieved?
   - YES → Refer to self-diagnosis code chart (*3).
   - NO ↓

Does rear outlet position and temperature change when adjusted from front air control?
- NO → Go to diagnostic procedure for air mix door motor (rear) (*5).
- YES ↓

Go to rear air control circuit (*4).

LJIA0119E

*1 ATC-58, "Operational Check (Rear)". *2 ATC-53, "A/C System Self-diagnosis Function". *3 ATC-54, "SELF-DIAGNOSIS CODE CHART".

*4 ATC-100, "DIAGNOSTIC PROCEDURE FOR REAR AIR CONTROL". *5 ATC-72, "DIAGNOSTIC PROCEDURE FOR AIR MIX DOOR MOTOR (REAR)".

SYSTEM DESCRIPTION

Component Parts

Rear air control system components are:

- Front air control
- Rear air control
- Air mix door motor (rear)
- Rear blower motor relay
- Rear blower motor resistor
- Rear blower motor

System Operation

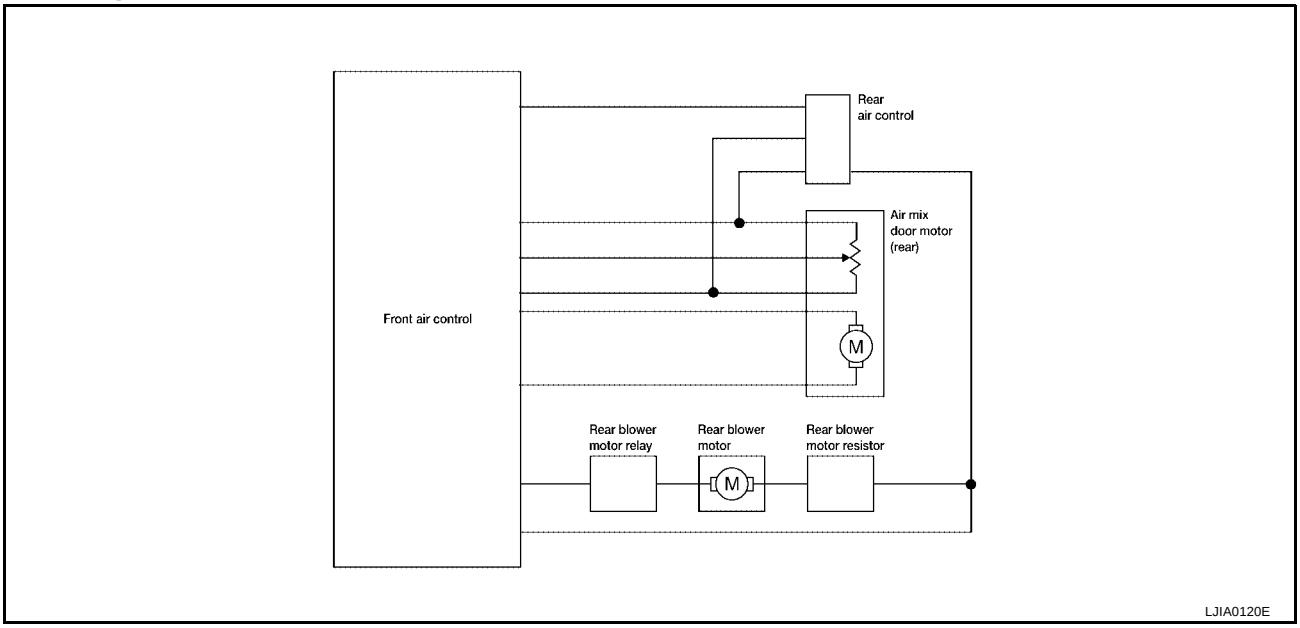

Rear Air Control

When the rear blower switch (front) (integral to the front air control) is in the REAR position the rear blower motor speeds and the rear temperature/mode are controlled by the rear blower switch (rear) and the rear temperature switch (rear) (both integral to the rear air control).

DIAGNOSTIC PROCEDURE FOR REAR AIR CONTROL

SYMPTOM:

- Blower motor operation is malfunctioning. Refer to ATC-88, "Rear Blower Motor Circuit" .
- Temperature/mode operation is malfunctioning.

1. CHECK OPERATION FROM FRONT AIR CONTROL

Does rear temperature/mode operate normally from front air control?

YES or NO

YES >> GO TO 2.
NO >> Refer to ATC-72, "DIAGNOSTIC PROCEDURE FOR AIR MIX DOOR MOTOR (REAR)" .

2. CHECK CIRCUIT BETWEEN REAR AIR CONTROL AND FRONT AIR CONTROL FOR OPEN AND SHORT

1. Turn ignition switch OFF.
2. Disconnect front air control and rear air control connectors.
3. Check continuity between front air control harness connector M50 terminal 33 (V) and rear air control harness connector R204 terminal 5 (V).

33 - 5	**Continuity should exist.**

4. Check continuity between rear air control harness connector R204 terminal 5 (V) and ground.

5 - Ground	**Continuity should not exist.**

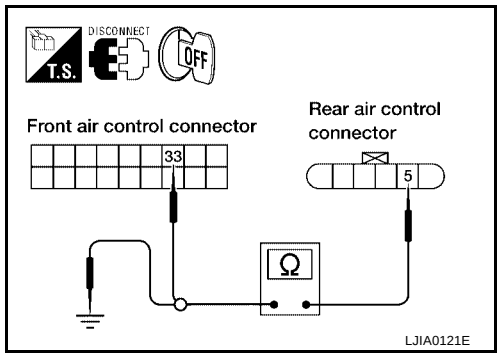

OK or NG

OK >> GO TO 3.
NG >> Repair harness or connector.

3. CHECK CIRCUIT BETWEEN REAR AIR CONTROL AND AIR MIX DOOR MOTOR (REAR) FOR OPEN OR SHORT

1. Disconnect air mix door motor (rear) connector.
2. Check continuity between rear air control harness connector R204 terminal 2 (P) and 4 (Y) and air mix door motor (rear) harness connector B155 terminal 2 (P) and 3 (Y).

2 - 2	**Continuity should exist.**
4 - 3	**Continuity should exist.**

3. Check continuity between rear air control harness connector R204 terminals 2 (P) and 4 (Y) and ground.

2, 4 - Ground	**Continuity should not exist.**

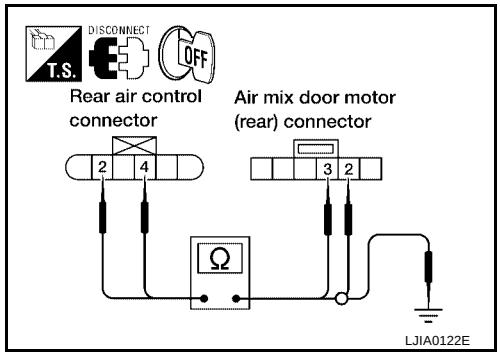

OK or NG

OK >> Replace rear air control.
NG >> Repair harness or connector.

Magnet Clutch Circuit

EJS001VK

SYMPTOM: Magnet clutch does not engage.

INSPECTION FLOW

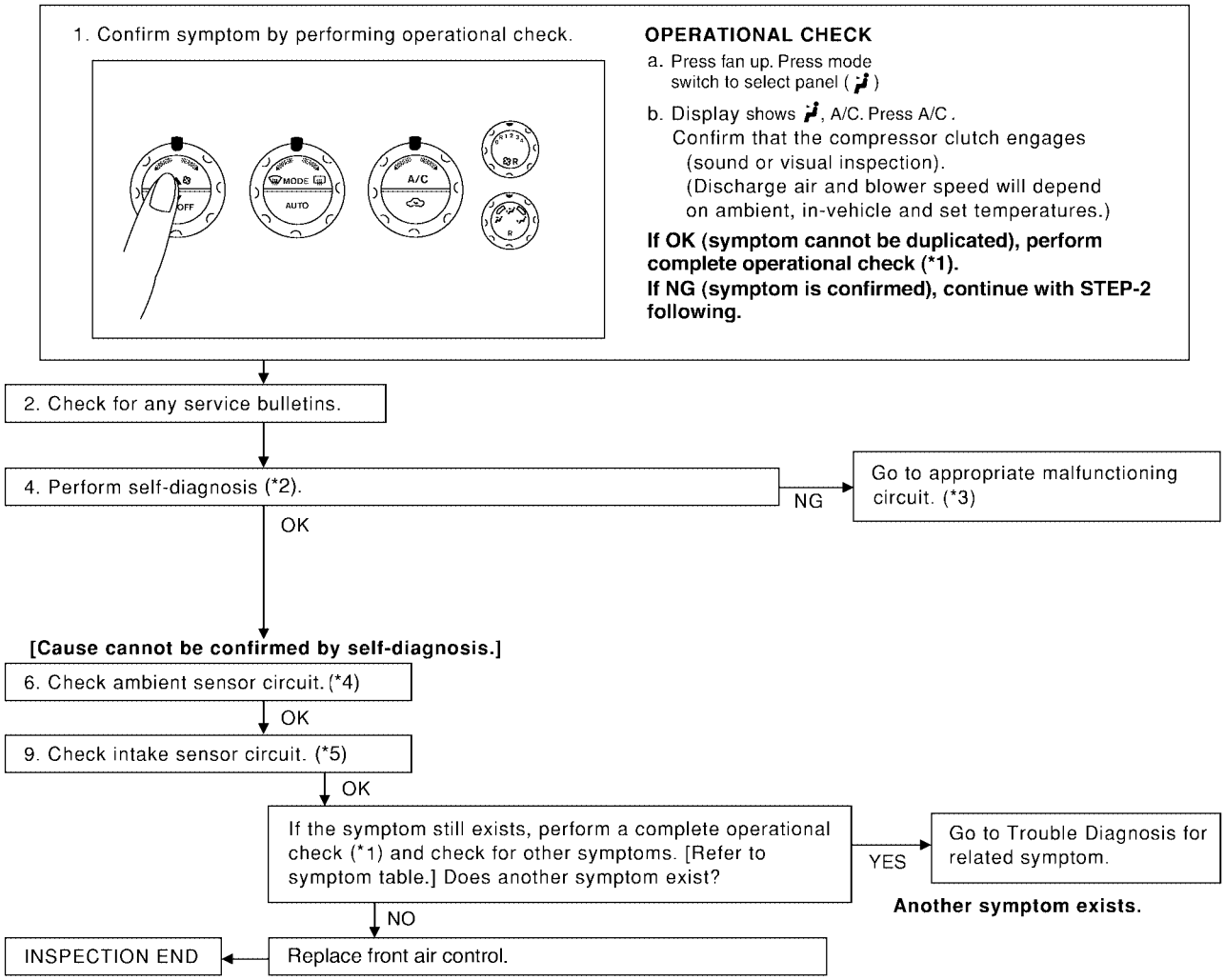

WJIA0602E

*1 .ATC-55, "Operational Check (Front)" .

*2 ATC-53, "A/C System Self-diagnosis Function".

*3 ATC-54, "SELF-DIAGNOSIS CODE CHART".

*4 ATC-123, "Ambient Sensor Circuit".

*5 ATC-131, "Intake Sensor Circuit".

SYSTEM DESCRIPTION

The front air control controls compressor operation based on ambient and intake temperature and a signal from ECM.

Low Temperature Protection Control

The front air control will turn the compressor ON or OFF as determined by a signal detected by the intake sensor and the ambient sensor.
When intake air temperature is higher than the preset value, the compressor turns ON. The compressor turns OFF when intake air temperature is lower than the preset value. That preset value is dependent on the ambient temperature, refer to the following table.

Ambient temperature °C (°F)	Compressor ON intake temperature C (°F)	Compressor OFF intake temperature C (°F)
0 (32)	2.5 (37)	2.0 (36)
10 (50)	2.5 (37)	2.0 (36)
20 (68)	2.5 (37)	1.5 (35)
30 (86)	2.0 (36)	0.5 (33)
40 (104)	2.0 (36)	0.5 (33)
50 (122)	2.0 (36)	0.5 (33)

DIAGNOSTIC PROCEDURE FOR MAGNET CLUTCH

SYMPTOM: Magnet clutch does not engage when A/C switch is ON.

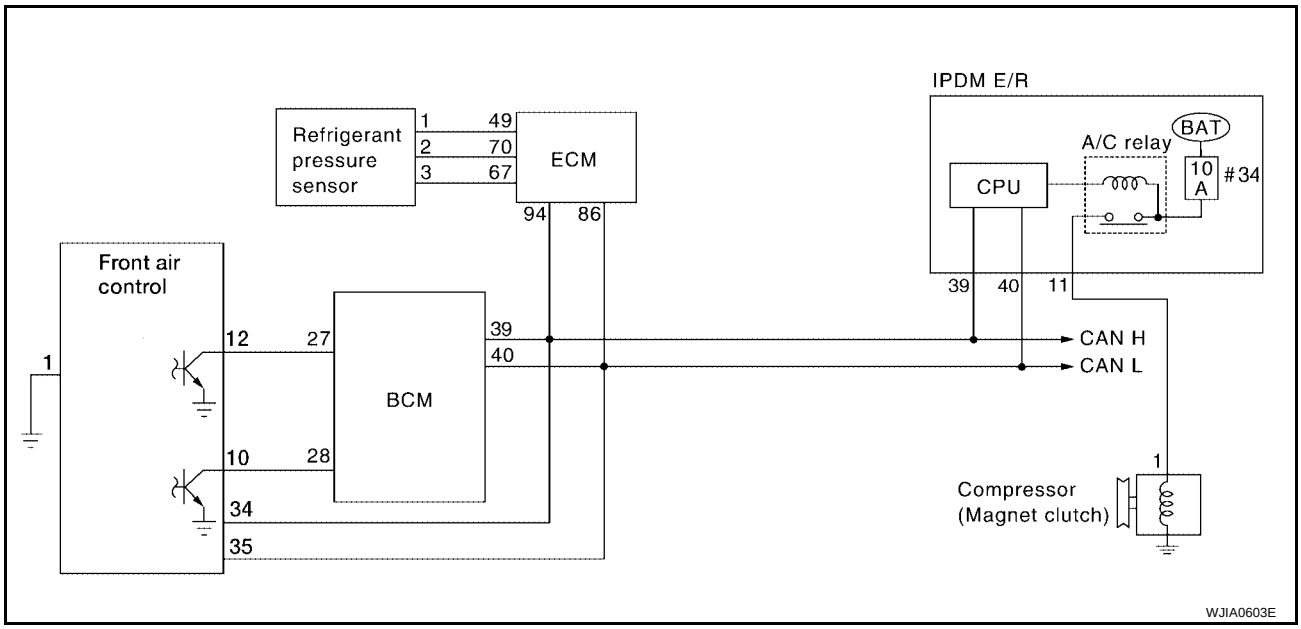

1. CHECK INTAKE AND AMBIENT SENSOR CIRCUITS

Check intake and ambient sensors. Refer to ATC-53, "A/C System Self-diagnosis Function" .

OK or NG

OK >> GO TO 2.
NG >> ● Malfunctioning intake sensor. Refer to ATC-131, "Intake Sensor Circuit" .
● Malfunctioning ambient sensor. Refer to ATC-131, "Intake Sensor Circuit" .

2. PERFORM AUTO ACTIVE TEST

Refer to PG-22, "Auto Active Test" .
Does magnet clutch operate?

YES or NO

YES >> ● WITH CONSULT-II
GO TO 5.

● WITHOUT CONSULT-II
GO TO 6.

NO >> Check 10A fuse (No. 48, located in IPDM E/R), and GO TO 3.

3. CHECK CIRCUIT CONTINUITY BETWEEN IPDM E/R AND COMPRESSOR

1. Turn ignition switch OFF.
2. Disconnect IPDM E/R connector and compressor (magnet clutch) connector.
3. Check continuity between IPDM E/R harness connector E119 terminal 11 (Y/B) and compressor harness connector F3 terminal 1 (Y/B).

11 – 1 : Continuity should exist.

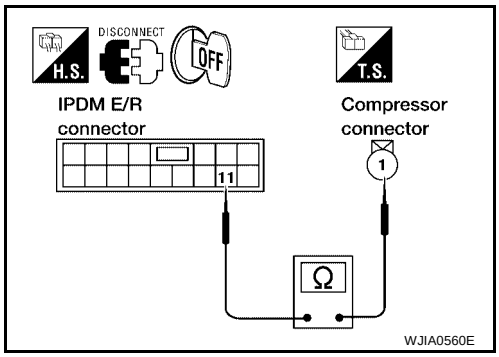

OK or NG

OK >> GO TO 4.
NG >> Repair harness or connector.

4. CHECK MAGNET CLUTCH CIRCUIT

Check for operation sound when applying battery voltage direct current to terminal.

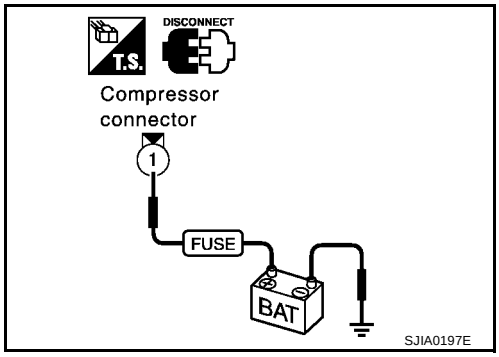

OK or NG

OK >> Replace IPDM E/R.
NG >> Replace magnet clutch. Refer to ATC-165, "Removal and Installation for Compressor Clutch" .

5. CHECK BCM INPUT (COMPRESSOR ON) SIGNAL

Check compressor ON/OFF signal. Refer to ATC-33, "CONSULT-II" .

A/C SW ON : COMP ON SIG ON

A/C SW OFF : COMP ON SIG OFF

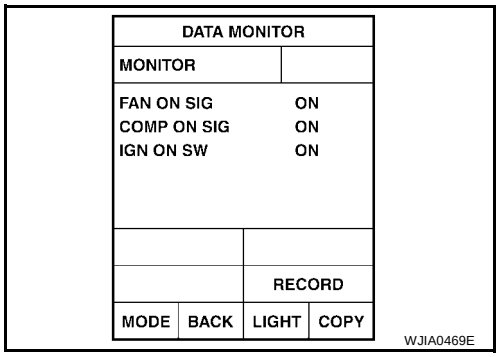

OK or NG

OK >> GO TO 8.
NG >> GO TO 6.

6. CHECK CIRCUIT CONTINUITY BETWEEN BCM AND FRONT AIR CONTROL

1. Turn ignition switch OFF.
2. Disconnect BCM connector and front air control connector.
3. Check continuity between BCM harness connector M18 terminal 27 (W) and front air control harness connector M49 terminal 12 (W).

27 - 12 **Continuity should exist.**

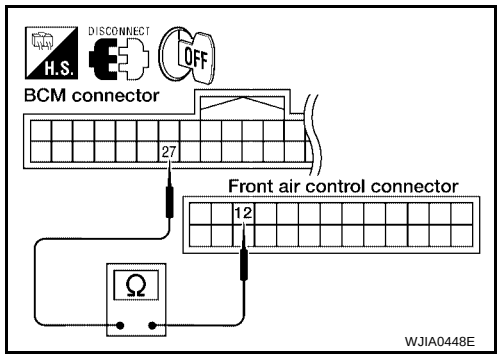

OK or NG

OK >> GO TO 7.
NG >> Repair harness or connector.

7. CHECK VOLTAGE FOR FRONT AIR CONTROL (COMPRESSOR ON SIGNAL)

1. Reconnect BCM connector and front air control connector.
2. Turn ignition switch ON.
3. Check voltage between front air control harness connector M49 terminal 12 (W) and ground.

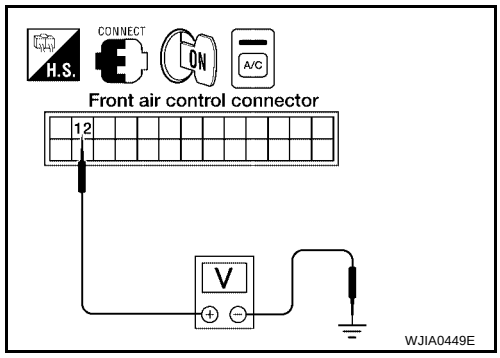

Terminals			Condition	Voltage
(+)		(-)		
Front air control connector	Terminal No. (Wire color)			
M49	12 (W)	Ground	A/C switch: ON	Approx. 0V
			A/C switch: OFF	Approx. 5V

OK or NG

OK >> GO TO 8.
NG-1 >> If the voltage is approx. 5V when A/C switch is ON, replace front air control. Refer to ATC-133, "FRONT AIR CONTROL" .
NG-2 >> If the voltage is approx. 0V when A/C switch is OFF, replace BCM. Refer to BCS-21, "Removal and Installation of BCM" .

8. CHECK REFRIGERANT PRESSURE SENSOR

WITH CONSULT-II

1. Start engine.
2. Check voltage of refrigerant pressure sensor. Refer to ATC-33, "CONSULT-II" .

WITHOUT CONSULT-II

1. Start engine.
2. Check voltage between ECM harness connector F54 terminal 70 (B/W) and ground.

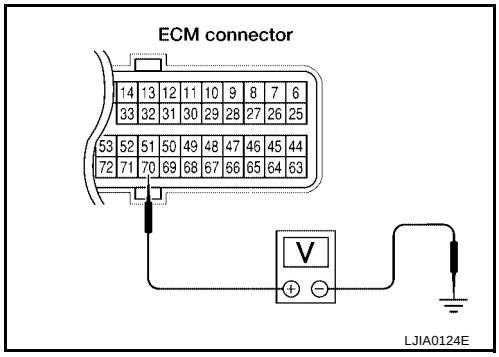

Terminals			Condition	Voltage
(+)		(-)		
ECM connector	Terminal No. (Wire color)			
F54	70 (B/W)	Ground	A/C switch: ON	Approx. 0.36 - 3.88V

OK or NG

OK >> ● WITH CONSULT-II
GO TO 9.
● WITHOUT CONSULT-II
GO TO 10.

NG >> Refer to EC-585, "REFRIGERANT PRESSURE SENSOR" .

9. CHECK BCM INPUT (FAN ON) SIGNAL

Check FAN ON/OFF signal. Refer to ATC-33, "CONSULT-II" .

BLOWER CONTROL SWITCH ON **: FAN ON SIG ON**

BLOWER CONTROL SWITCH OFF **: FAN ON SIG OFF**

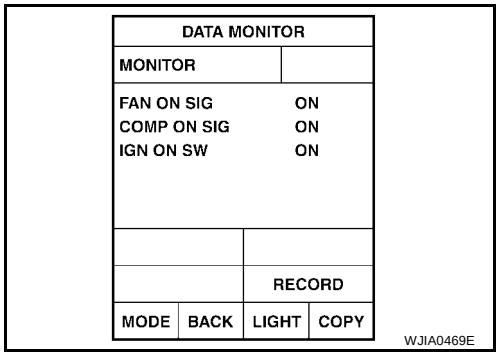

OK or NG

OK >> GO TO 12.
NG >> GO TO 10.

10. CHECK CIRCUIT CONTINUITY BETWEEN BCM AND FRONT AIR CONTROL

1. Turn ignition switch OFF.
2. Disconnect BCM connector and front air control connector.
3. Check continuity between BCM harness connector M18 terminal 28 (L/R) and front air control harness connector M49 terminal 10 (L/R).

28 - 10 **Continuity should exist.**

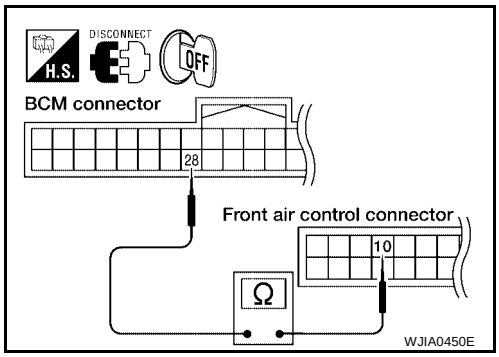

OK or NG

OK >> GO TO 11.
NG >> Repair harness or connector.

11. CHECK VOLTAGE FOR FRONT AIR CONTROL (FAN ON SIGNAL)

1. Reconnect BCM connector and front air control connector.
2. Turn ignition switch ON.
3. Check voltage between front air control harness connector M49 terminal 10 (L/R) and ground.

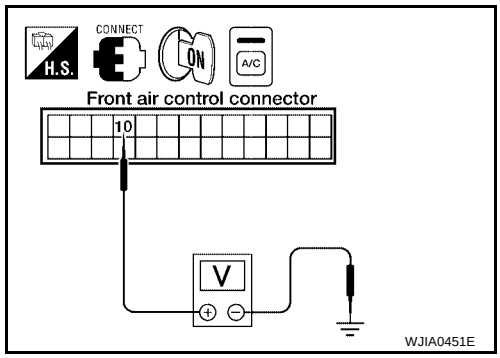

Terminals			Condition	Voltage
(+)		(-)		
Front air control connector	Terminal No. (Wire color)			
M49	10 (L/R)	Ground	A/C switch: ON Blower motor operates	Approx. 0V
			A/C switch: OFF	Approx. 5V

OK or NG

OK >> GO TO 12.

NG-1 >> If the voltage is approx. 5V when blower motor is ON, replace front air control. Refer to ATC-133, "FRONT AIR CONTROL" .

NG-2 >> If the voltage is approx. 0V when blower motor is OFF, replace BCM. Refer to BCS-21, "Removal and Installation of BCM" .

12. CHECK CAN COMMUNICATION

Check CAN communication. Refer to ATC-32, "CAN Communication System Description" .

- BCM – ECM
- ECM – IPDM E/R
- ECM – Front air control

OK or NG

OK >> Inspection End.

NG >> Repair or replace malfunctioning part(s).

COMPONENT INSPECTION

Refrigerant Pressure Sensor

The refrigerant pressure sensor is attached to the condenser.

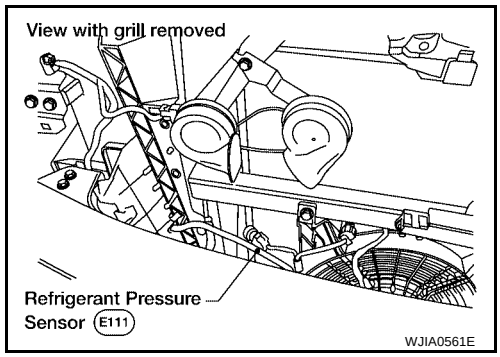

Insufficient Cooling

EJS001VL

SYMPTOM: Insufficient cooling

INSPECTION FLOW

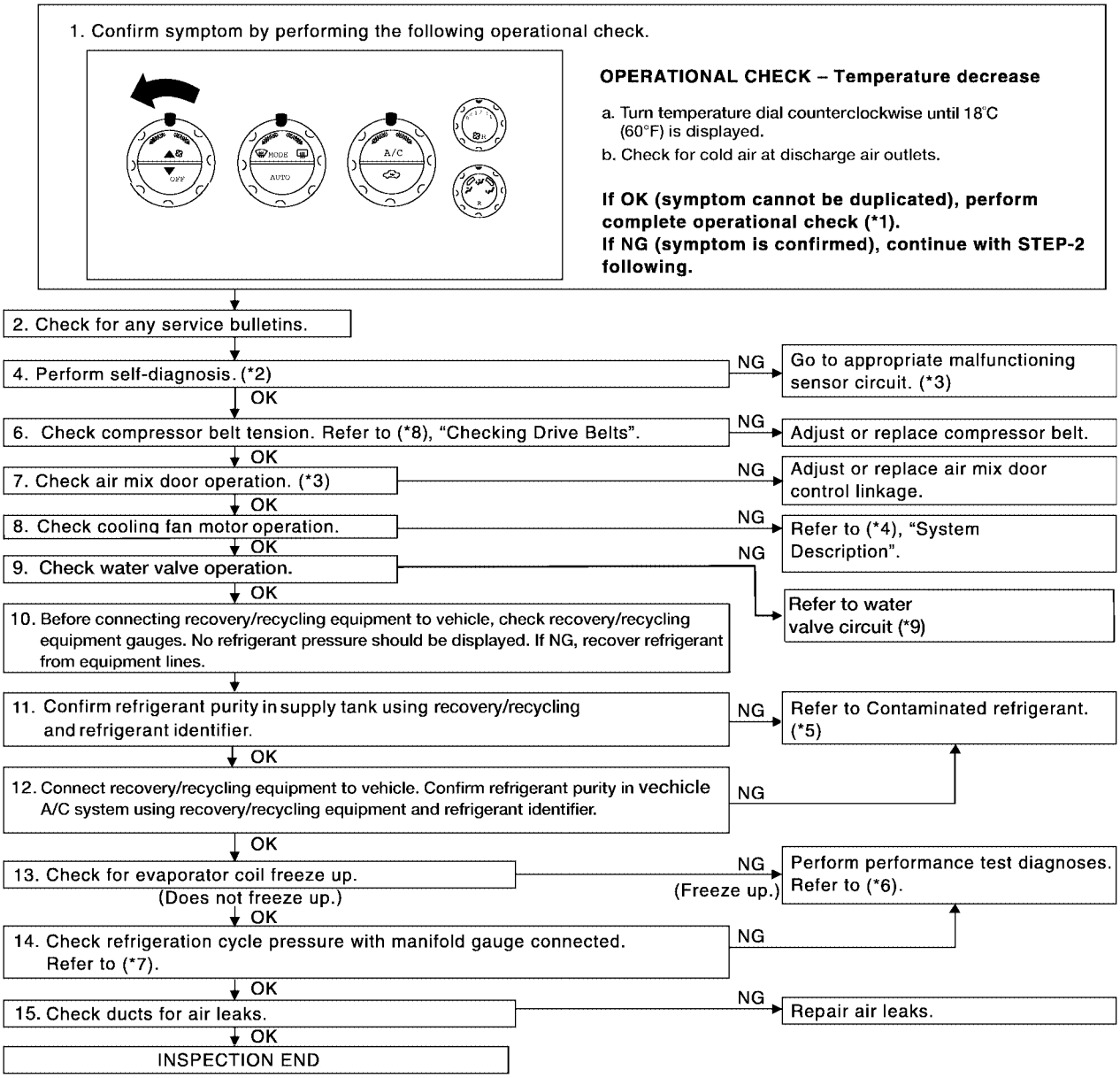

*1 .ATC-55, "Operational Check (Front)" .	*2 ATC-53, "A/C System Self-diagnosis Function".	*3 ATC-54, "SELF-DIAGNOSIS CODE CHART".
*4 EC-408, "SYSTEM DESCRIPTION" .	*5 ATC-5, "Contaminated Refrigerant".	*6 .ATC-109, "PERFORMANCE TEST DIAGNOSES"
*7 ATC-111, "Test Reading"	*8 MA-13, "Checking Drive Belts"	*9 ATC-119, "Water Valve Circuit"

PERFORMANCE TEST DIAGNOSES

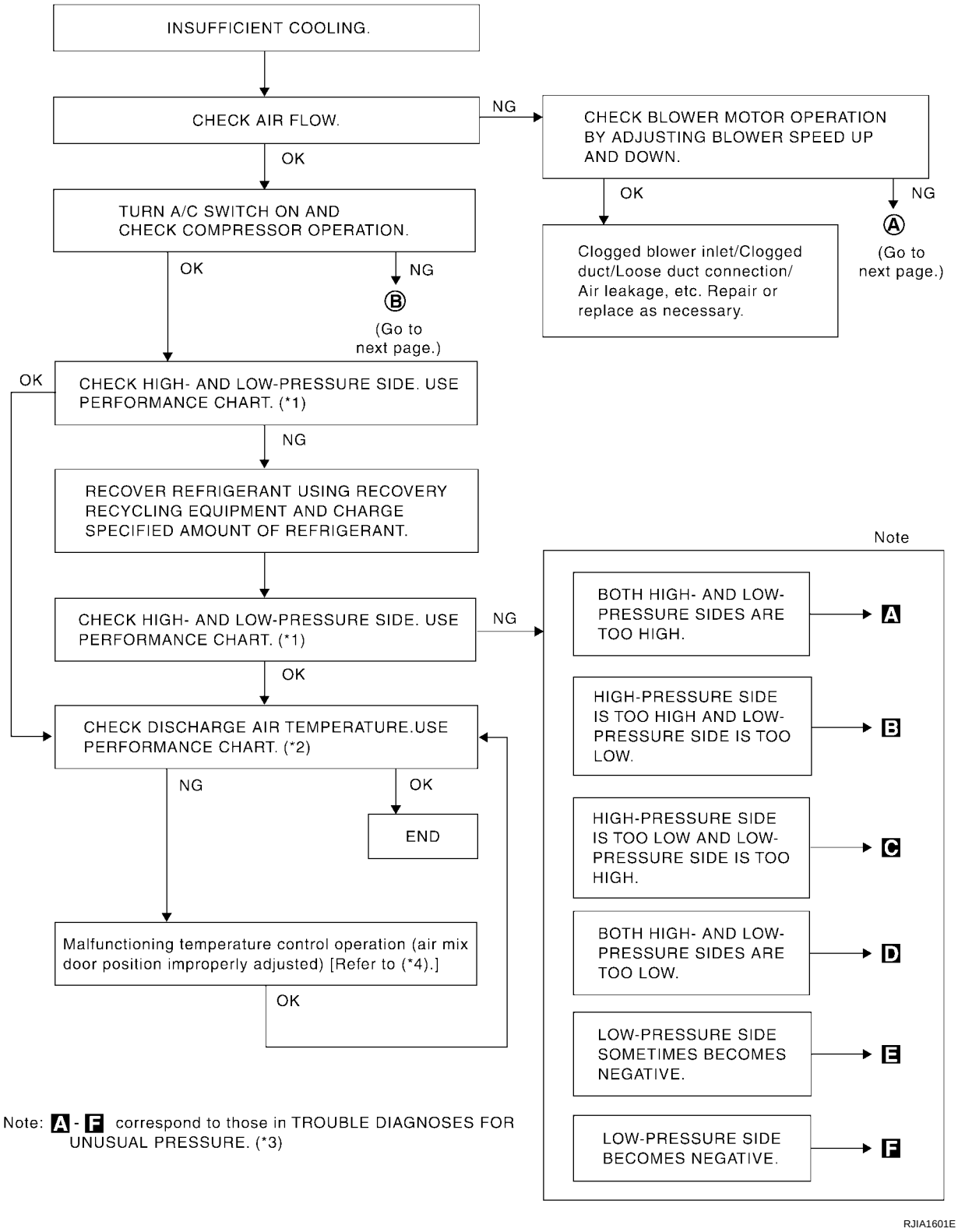

*1 ATC-111, "PERFORMANCE CHART".

*2 ATC-111, "PERFORMANCE CHART".

*3 ATC-112, "Trouble Diagnoses for Unusual Pressure".

*4 ATC-66, "Air Mix Door Motor Circuit".

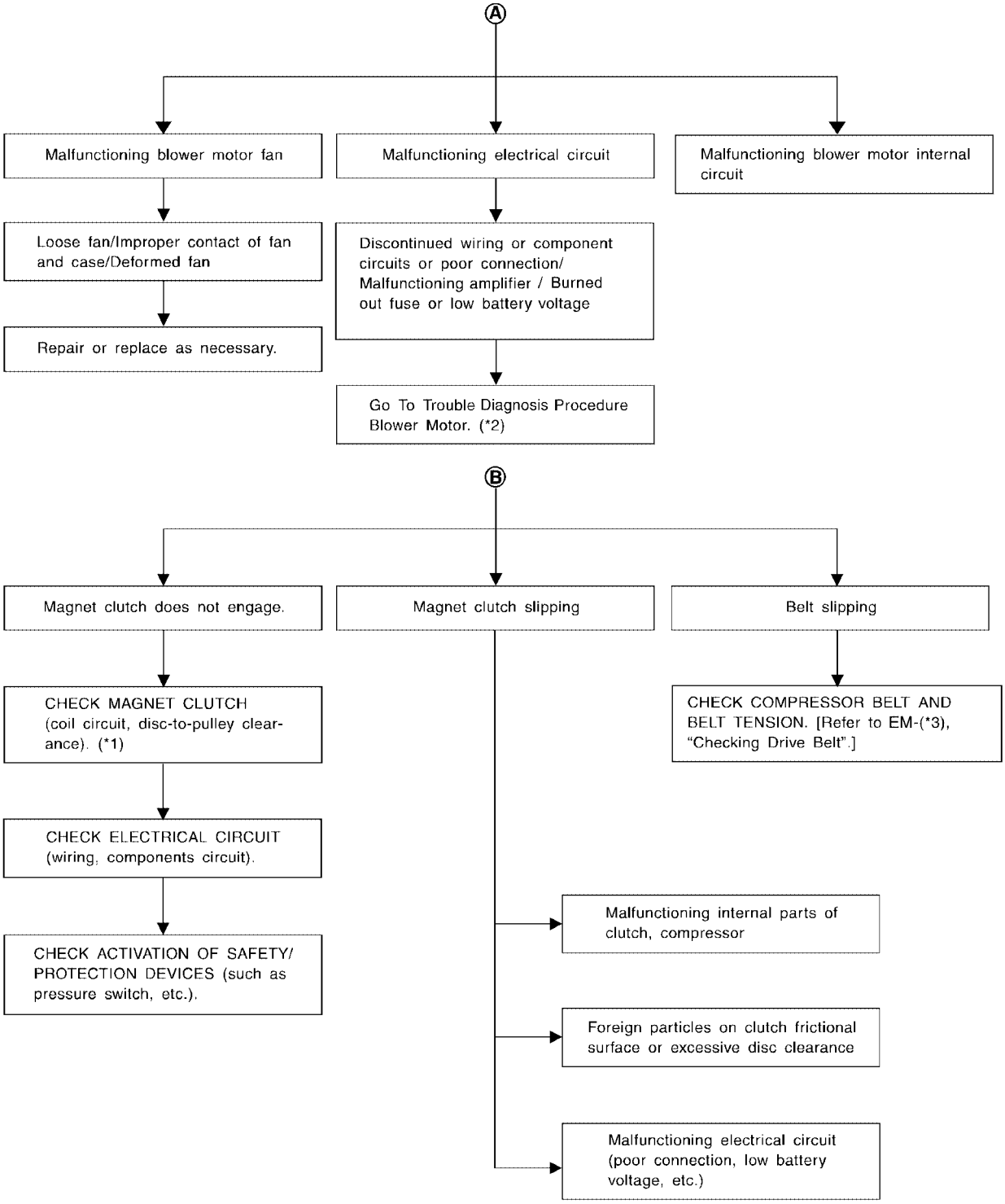

WJIA0361E

*1 ATC-165, "Removal and Installation for Compressor Clutch". *2 ATC-81, "Front Blower Motor Circuit". *3 MA-13, "Checking Drive Belts".

PERFORMANCE CHART

Test Condition

Testing must be performed as follows:

Vehicle location	Indoors or in the shade (in a well-ventilated place)
Doors	Closed
Door window	Open
Hood	Open
TEMP.	Max. COLD
Mode switch	(Ventilation) set
Recirculation (REC) switch	(Recirculation) set
Blower speed	Max. speed set
Engine speed	Idle speed
Operate the air conditioning system for 10 minutes before taking measurements.	

Test Reading

Recirculating-to-discharge Air Temperature Table

Inside air (Recirculating air) at blower assembly inlet		Discharge air temperature at center ventilator °C (°F)
Relative humidity %	Air temperature °C (°F)	
50 - 60	20 (68)	5.3 - 6.5 (42 - 44)
	25 (77)	9.7 - 11.5 (49 - 53)
	30 (86)	13.8 - 16.3 (57 - 61)
	35 (95)	18.0 - 21.2 (64 - 70)
	40 (104)	22.2 - 25.7 (72 - 78)
60 - 70	20 (68)	6.5 - 7.7 (44 - 46)
	25 (77)	11.5 - 13.3 (53 - 56)
	30 (86)	16.3 - 18.8 (61 - 66)
	35 (95)	21.2 - 24.0 (70 - 75)
	40 (104)	25.7 - 29.2 (78 - 85)

Ambient Air Temperature-to-operating Pressure Table

Ambient air		High-pressure (Discharge side) kPa (kg/cm^2 , psi)	Low-pressure (Suction side) kPa (kg/cm^2 , psi)
Relative humidity %	Air temperature °C (°F)		
50 - 70	20 (68)	680 - 840 (6.94 - 8.57, 98.6 - 121.8)	160 - 198 (1.63 - 2.02, 23.2 - 28.7)
	25 (77)	800 - 985 (8.16 - 10.05, 116.0 - 142.8)	198 - 245 (2.02 - 2.50, 28.7 - 35.5)
	30 (86)	940 - 1,150 (9.59 - 11.73, 136.3 - 166.8)	225 - 278 (2.30 - 2.84, 32.6 - 40.3)
	35 (95)	1,160 - 1,410 (11.83 - 14.38, 168.2 - 204.5)	273 - 335 (2.78 - 3.42, 39.6 - 48.6)
	40 (104)	1,325 - 1,620 (13.52 - 16.52, 192.1 - 234.9)	325 - 398 (3.32 - 4.06, 47.1 - 57.7)

TROUBLE DIAGNOSES FOR UNUSUAL PRESSURE

Whenever system's high and/or low side pressure is unusual, diagnose using a manifold gauge. The marker above the gauge scale in the following tables indicates the standard (usual) pressure range. Since the standard (usual) pressure, however, differs from vehicle to vehicle, refer to above table (Ambient air temperature-to-operating pressure table).

Both High- and Low-pressure Sides are Too High

Gauge indication	Refrigerant cycle	Probable cause	Corrective action
Both high- and low-pressure sides are too high. 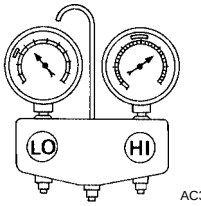 AC359A	Pressure is reduced soon after water is splashed on condenser.	Excessive refrigerant charge in refrigeration cycle	Reduce refrigerant until specified pressure is obtained.
	Air suction by cooling fan is insufficient.	Insufficient condenser cooling performance ↓ 1. Condenser fins are clogged. 2. Improper fan rotation of cooling fan	● Clean condenser. ● Check and repair cooling fan as necessary.
	● Low-pressure pipe is not cold. ● When compressor is stopped high-pressure value quickly drops by approximately 196 kPa (2 kg/cm^2 , 28 psi). It then decreases gradually thereafter.	Poor heat exchange in condenser (After compressor operation stops, high-pressure decreases too slowly.) ↓ Air in refrigeration cycle	Evacuate repeatedly and recharge system.
	Engine tends to overheat.	Engine cooling systems malfunction.	Check and repair engine cooling system.
	● An area of the low-pressure pipe is colder than areas near the evaporator outlet. ● Plates are sometimes covered with frost.	● Excessive liquid refrigerant on low-pressure side ● Excessive refrigerant discharge flow ● Expansion valve is open a little compared with the specification. ↓ Improper expansion valve adjustment	Replace expansion valve.

High-pressure Side is Too High and Low-pressure Side is Too Low

Gauge indication	Refrigerant cycle	Probable cause	Corrective action
High-pressure side is too high and low-pressure side is too low. 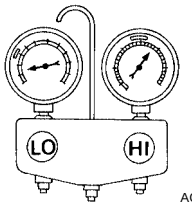 AC360A	Upper side of condenser and high-pressure side are hot, however, liquid tank is not so hot.	High-pressure tube or parts located between compressor and condenser are clogged or crushed.	● Check and repair or replace malfunctioning parts. ● Check lubricant for contamination.

High-pressure Side is Too Low and Low-pressure Side is Too High

Gauge indication	Refrigerant cycle	Probable cause	Corrective action
High-pressure side is too low and low-pressure side is too high. 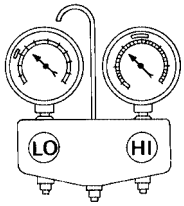 AC356A	High- and low-pressure sides become equal soon after compressor operation stops.	Compressor pressure operation is improper. ↓ Damaged inside compressor packings.	Replace compressor.
	No temperature difference between high- and low-pressure sides.	Compressor pressure operation is improper. ↓ Damaged inside compressor packings.	Replace compressor.

Both High- and Low-pressure Sides are Too Low

Gauge indication	Refrigerant cycle	Probable cause	Corrective action
Both high- and low-pressure sides are too low. 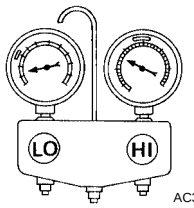 AC353A	● There is a big temperature difference between receiver drier outlet and inlet. Outlet temperature is extremely low. ● Liquid tank inlet and expansion valve are frosted.	Liquid tank inside is slightly clogged.	● Replace liquid tank. ● Check lubricant for contamination.
	● Temperature of expansion valve inlet is extremely low as compared with areas near liquid tank. ● Expansion valve inlet may be frosted. ● Temperature difference occurs somewhere in high-pressure side.	High-pressure pipe located between receiver drier and expansion valve is clogged.	● Check and repair malfunctioning parts. ● Check lubricant for contamination.
	Expansion valve and liquid tank are warm or only cool when touched.	Low refrigerant charge. ↓ Leaking fittings or components.	Check refrigerant system for leaks. Refer to ATC-174, "Checking for Refrigerant Leaks" .
	There is a big temperature difference between expansion valve inlet and outlet while the valve itself is frosted.	Expansion valve closes a little compared with the specification. ↓ 1. Improper expansion valve adjustment. 2. Malfunctioning expansion valve. 3. Outlet and inlet may be clogged.	● Remove foreign particles by using compressed air. ● Check lubricant for contamination.
	An area of the low-pressure pipe is colder than areas near the evaporator outlet.	Low-pressure pipe is clogged or crushed.	● Check and repair malfunctioning parts. ● Check lubricant for contamination.
	Air flow volume is too low.	Evaporator is frozen.	● Check intake sensor circuit. Refer to ATC-131, "Intake Sensor Circuit" . ● Replace compressor.

Low-pressure Side Sometimes Becomes Negative

Gauge indication	Refrigerant cycle	Probable cause	Corrective action
Low-pressure side sometimes becomes negative. 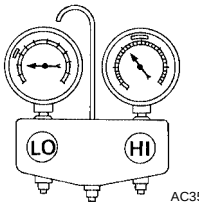	● Air conditioning system does not function and does not cyclically cool the compartment air. ● The system constantly functions for a certain period of time after compressor is stopped and restarted.	Refrigerant does not discharge cyclically. ↓ Moisture is frozen at expansion valve outlet and inlet. ↓ Water is mixed with refrigerant.	● Drain water from refrigerant or replace refrigerant. ● Replace liquid tank.

Low-pressure Side Becomes Negative

Gauge indication	Refrigerant cycle	Probable cause	Corrective action
Low-pressure side becomes negative. 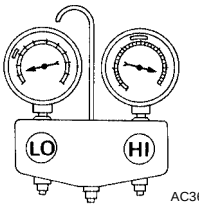	Liquid tank or front/rear side of expansion valve's pipe is frosted or dewed.	High-pressure side is closed and refrigerant does not flow. ↓ Expansion valve or liquid tank is frosted.	Leave the system at rest until no frost is present. Start it again to check whether or not the malfunction is caused by water or foreign particles. ● If water is the cause, initially cooling is okay. Then the water freezes causing a blockage. Drain water from refrigerant or replace refrigerant. ● If due to foreign particles, remove expansion valve and remove the particles with dry and compressed air (not shop air). ● If either of the above methods cannot correct the malfunction, replace expansion valve. ● Replace liquid tank. ● Check lubricant for contamination.

Insufficient Heating

EJS001VM

SYMPTOM: Insufficient heating

INSPECTION FLOW

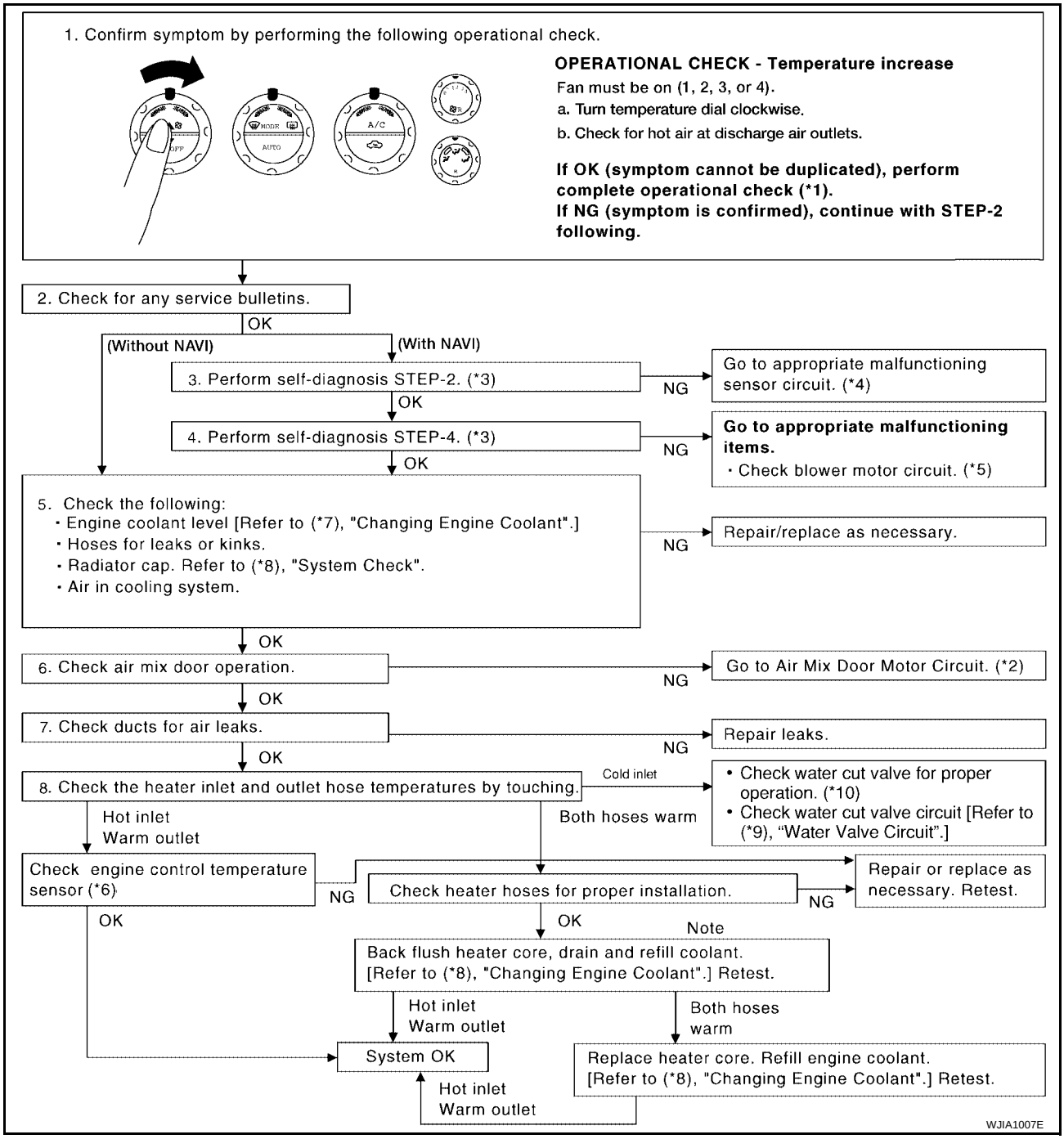

*1 .ATC-55, "Operational Check (Front)" or ATC-58, "Operational Check (Rear)" .	*2 ATC-66, "Air Mix Door Motor Circuit".	*3 ATC-53, "A/C System Self-diagnosis Function".
*4 ATC-53, "A/C System Self-diagnosis Function".	*5 ATC-81, "Front Blower Motor Circuit".	*6 EC-163, "DTC P0117, P0118 ECT SENSOR".
*7 MA-13, "Changing Engine Coolant".	*8 CO-12, "Checking Reservoir Cap".	*9 ATC-119, "Water Valve Circuit"
*10 CO-5, "OVERHEATING CAUSE ANALYSIS"		

Noise

EJS001VN

SYMPTOM: Noise

INSPECTION FLOW

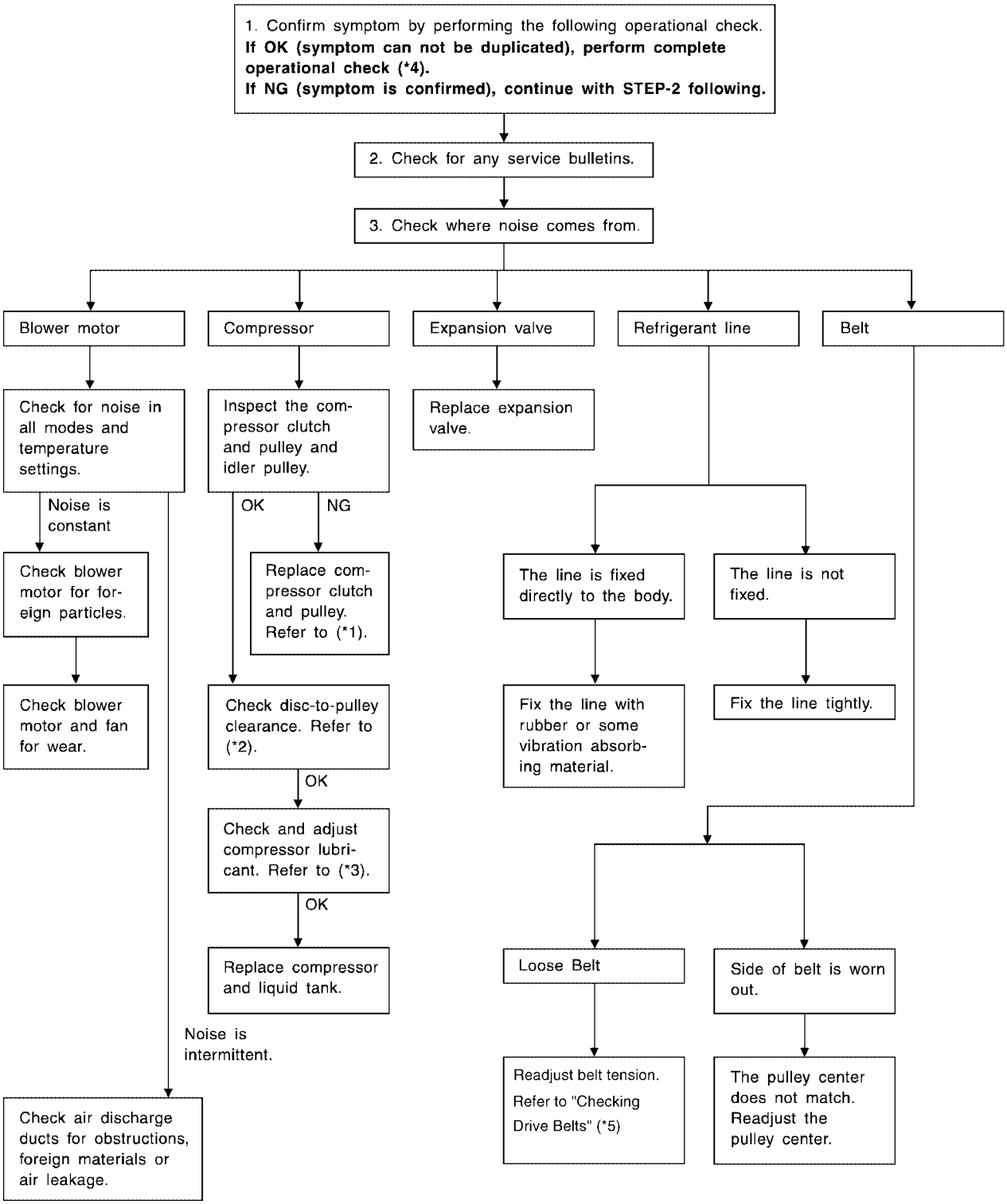

WJIA0473E

*1 ATC-165, "REMOVAL".

*2 ATC-166, "INSTALLATION".

*3 ATC-22, "Maintenance of Lubricant Quantity in Compressor".

*4 ATC-55, "Operational Check (Front)" or ATC-58, "Operational Check (Rear)" .

*5 MA-13, "Checking Drive Belts".

Self-diagnosis

EJS001VO

SYMPTOM: Self-diagnosis cannot be performed.

INSPECTION FLOW

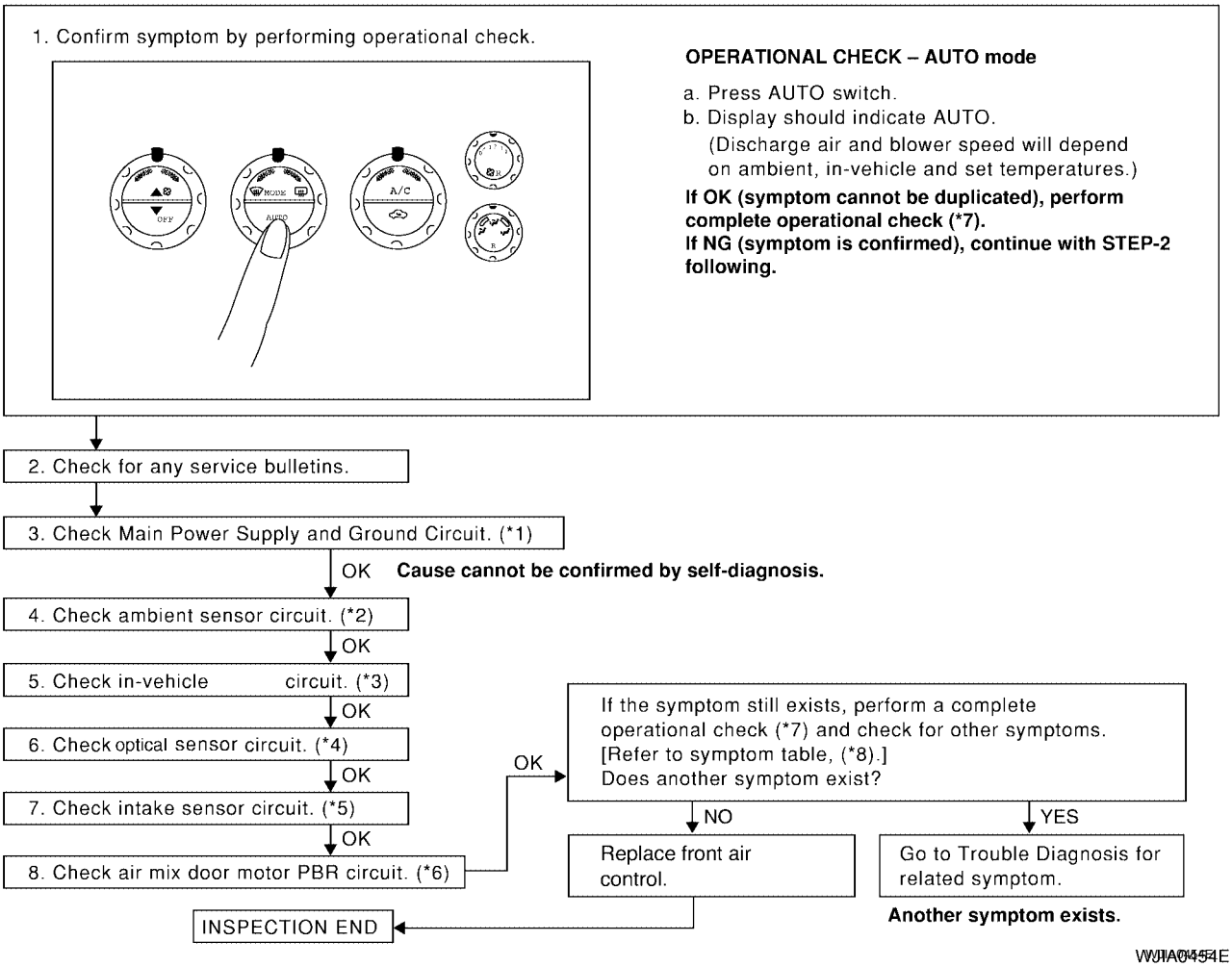

*1 ATC-59, "Power Supply and Ground Circuit for Front Air Control".
*2 ATC-123, "Ambient Sensor Circuit".
*3 ATC-126, "In-vehicle Sensor Circuit".
*4 ATC-129, "Optical Sensor Circuit".
*5 ATC-131, "Intake Sensor Circuit".
*6 ATC-66, "Air Mix Door Motor Circuit".
*7 ATC-55, "Operational Check (Front)".
*8 ATC-35, "SYMPTOM TABLE".

Memory Function

EJS001VP

SYMPTOM: Memory function does not operate.

INSPECTION FLOW

1. Confirm symptom by performing the following operational check.

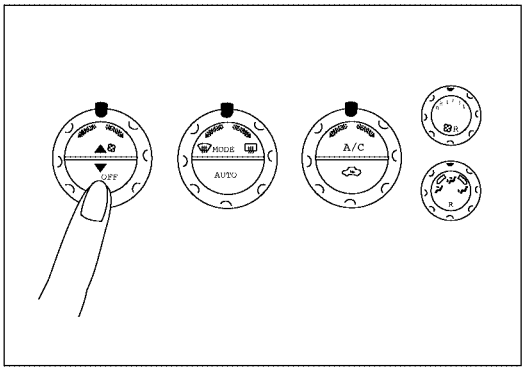

OPERATIONAL CHECK – Memory function

a. Set the temperature 90˚F or 32˚C.
b. Press OFF switch.
c. Turn the ignition off.
d. Turn the ignition on.
e. Press the AUTO switch.
f. Confirm that the set temperature remains at previous temperature.
g. Press OFF switch.

If OK (symptom cannot be duplicated), perform complete operational check (*2).
If NG (symptom is confirmed), continue with STEP-2 following.

↓

2. Check for any service bulletins.

↓

3. Check Main Power Supply and Ground Circuit. (*1)

↓ OK

4. Replace front air control.

↓

5. FINAL CHECK
Go to self-diagnosis procedure (*3).

WJIA0455E

*1 ATC-59, "Power Supply and Ground Circuit for Front Air Control".
*2 ATC-55, "Operational Check (Front)".
*3 ATC-53, "A/C System Self-diagnosis Function".

Water Valve Circuit

EJS00273

COMPONENT DESCRIPTION

Water Valve

The water valve cuts the flow of engine coolant to the front and rear heater cores to allow for maximum cooling during A/C operation. It is controlled by the front air control throught the water valve relay.

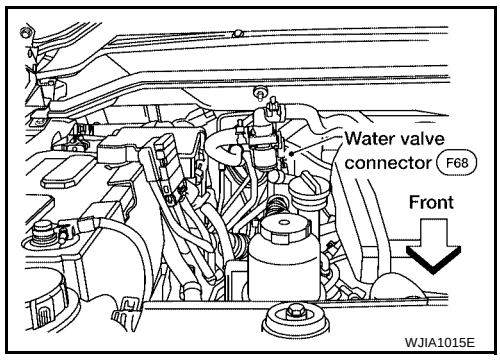

WJIA1015E

DIAGNOSTIC PROCEDURE FOR WATER VALVE

1. CHECK WATER VALVE RELAY POWER INPUT CIRCUITS

1. Turn ignition switch OFF.
2. Disconnect water valve relay connector M7.
3. Check voltage between water valve relay harness connector terminals and ground.

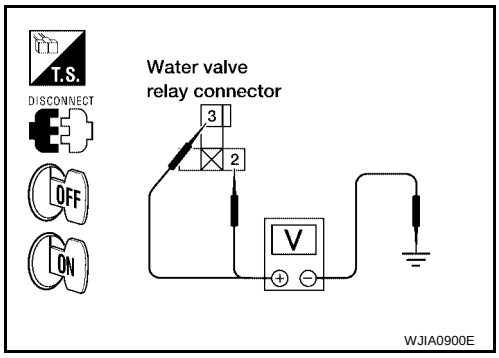

Terminals			Ignition switch position	
(+)		(-)	OFF	ON
Water valve relay connector	Terminal No. (Wire color)			
M7	2 (Y/G)	Ground	Battery voltage	Battery voltage
	3 (G/Y)		0V	Battery voltage

OK or NG

OK >> GO TO 2.
NG >> Repair harness or connector.

2. CHECK WATER VALVE CONTROL

1. Turn ignition switch ON.
2. Select MAX A/C with mode switch.
3. Check continuity between water valve relay harness connector M7 terminal 1 (W/G) and ground, as MAX A/C is switched OFF and ON.

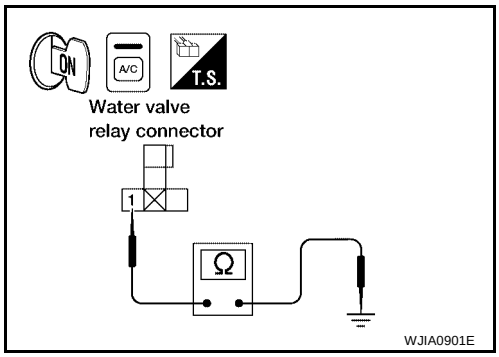

Terminals			Condition	Continuity
(+)		(-)		
Water valve relay connector	Terminal No. (Wire color)			
M7	1 (W/G)	Ground	MAX A/C: ON	Yes
			MAX A/C: OFF	No

OK or NG

OK >> GO TO 4.
NG >> GO TO 3.

3. CHECK WATER VALVE CONTROL OUTPUT CIRCUIT

1. Turn ignition switch OFF.
2. Disconnect front air control connector M50.
3. Check continuity between water valve relay harness connector M7 terminal 1 (W/G) and front air control harness connector M50 terminal 29 (W/G).

   1 - 29 : Continuity should exist.

4. Check continuity between water valve relay harness connector M7 terminal 1 (W/G) and ground.

   1 - Ground : Continuity should not exist.

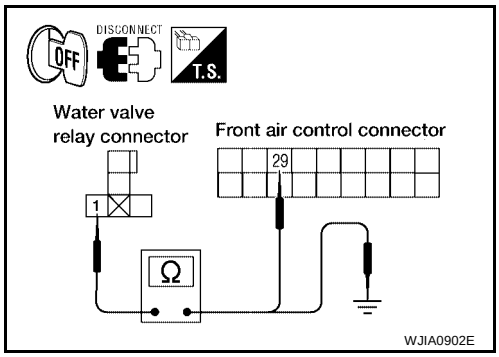

OK or NG

OK >> Replace front air control. Refer to ATC-133, "FRONT AIR CONTROL" .
NG >> Repair harness or connector.

4. CHECK WATER VALVE RELAY

Check water valve relay. Refer to ATC-122, "Water Valve Relay" .

OK or NG

OK >> GO TO 5
NG >> Replace water valve relay.

5. CHECK WATER VALVE GROUND CIRCUIT

1. Turn ignition switch OFF.
2. Disconnect water valve connector F68.
3. Check continuity between water valve harness connector F68 terminal - (B) and ground.

(-) - Ground : Continuity should exist.

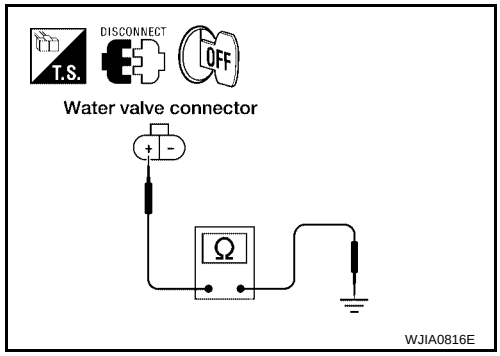

OK or NG

OK >> GO TO 6.
NG >> Repair harness or connector.

6. CHECK WATER VALVE POWER CIRCUIT

1. Check continuity between water valve relay connector terminal 5 (Y/L) and water valve connector F68 terminal + (Y/L)

5 - + : Continuity should exist.

2. Check continuity between water valve relay harness connector M7 terminal 5 (Y/L) and ground.

5 - Ground : Continuity should not exist.

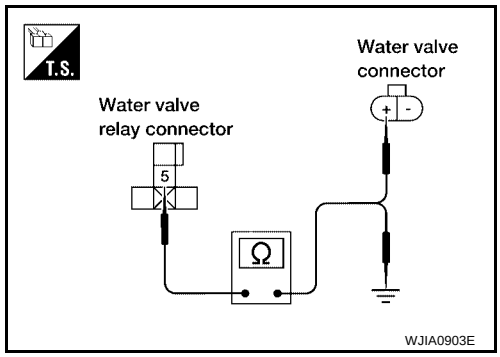

OK or NG

OK >> Replace water valve.
NG >> Repair harness or connector.

COMPONENT INSPECTION

Water Valve Relay

Check continuity between terminals by supplying 12 volts and ground to coil side terminals of relay.

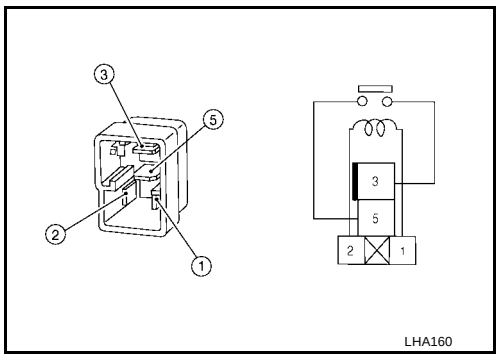

Ambient Sensor Circuit

EJS001VQ

COMPONENT DESCRIPTION

Ambient Sensor

The ambient sensor is attached on the radiator core support (left side). It detects ambient temperature and converts it into a resistance value which is then input into the front air control.

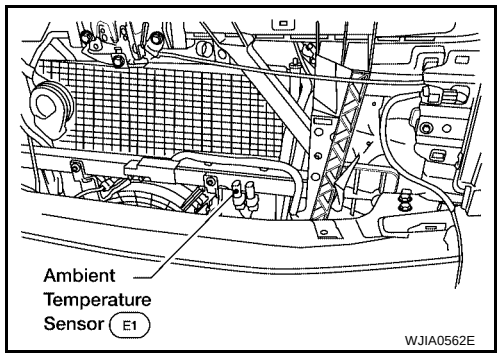

AMBIENT TEMPERATURE INPUT PROCESS

The front air control includes a processing circuit for the ambient sensor input. However, when the temperature detected by the ambient sensor increases quickly, the processing circuit retards the front air control function. It only allows the front air control to recognize an ambient temperature increase of 0.33°C (0.6°F) per 100 seconds.

This prevents constant adjustments due to momentary conditions, such as stopping after high speed driving. Although the actual ambient temperature has not changed, the temperature detected by the ambient sensor will increase. This is because the heat from the engine compartment can radiate to the front grille area, location of the ambient sensor.

DIAGNOSTIC PROCEDURE FOR AMBIENT SENSOR

SYMPTOM: Ambient sensor circuit is open or shorted. (40 or 41 is indicated on front air control as a result of conducting the front air control self-diagnosis)

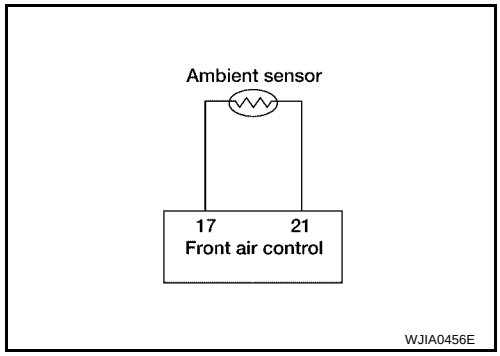

1. CHECK VOLTAGE BETWEEN AMBIENT SENSOR AND GROUND

1. Disconnect ambient sensor connector.
2. Turn ignition switch ON.
3. Check voltage between ambient sensor harness connector E1 terminal 2 (V/R) and ground.

2 - Ground : Approx. 5V

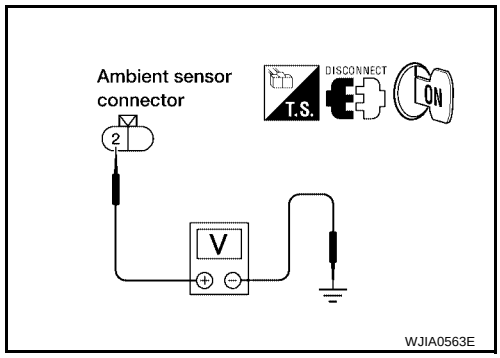

OK or NG

OK >> GO TO 2.
NG >> GO TO 4.

2. CHECK CIRCUIT CONTINUITY BETWEEN AMBIENT SENSOR AND FRONT AIR CONTROL

1. Turn ignition switch OFF.
2. Disconnect front air control connector.
3. Check continuity between ambient sensor harness connector E1 terminal 1 (P) and front air control harness connector M49 terminal 17 (P).

1 - 17 : Continuity should exist.

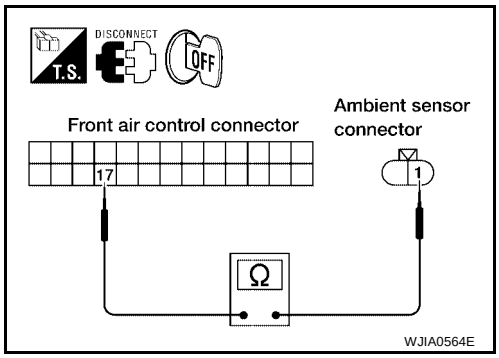

OK or NG

OK >> GO TO 3.
NG >> Repair harness or connector.

3. CHECK AMBIENT SENSOR

Refer to ATC-125, "Ambient Sensor" .

OK or NG

OK >> 1. Replace front air control.
2. Go to self-diagnosis ATC-53, "A/C System Self-diagnosis Function" and perform self-diagnosis.

NG >> 1. Replace ambient sensor.
2. Go to self-diagnosis ATC-53, "A/C System Self-diagnosis Function" and perform self-diagnosis.

4. CHECK CIRCUIT CONTINUITY BETWEEN AMBIENT SENSOR AND FRONT AIR CONTROL

1. Turn ignition switch OFF.
2. Disconnect front air control connector.
3. Check continuity between ambient sensor harness connector E1 terminal 2 (V/R) and front air control harness connector M49 terminal 21 (V/R).

2 - 21 : Continuity should exist.

4. Check continuity between ambient sensor harness connector E1 terminal 2 (V/R) and ground.

2 - Ground : Continuity should not exist.

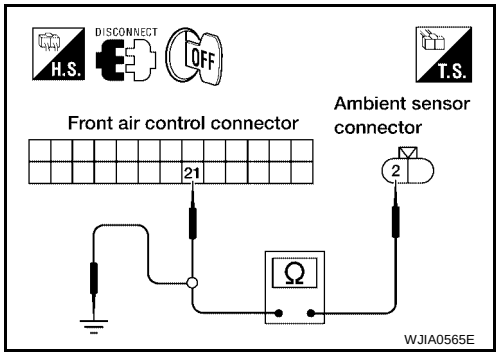

OK or NG

OK >> 1. Replace front air control.
2. Go to self-diagnosis ATC-53, "A/C System Self-diagnosis Function" and perform self-diagnosis.

NG >> Repair harness or connector.

COMPONENT INSPECTION

Ambient Sensor

After disconnecting ambient sensor connector E1, measure resistance between terminals 2 and 1 at sensor component side, using the table below.

Temperature °C (°F)	Resistance kΩ
–15 (5)	12.73
–10 (14)	9.92
–5 (23)	7.80
0 (32)	6.19
5 (41)	4.95
10 (50)	3.99
15 (59)	3.24
20 (68)	2.65
25 (77)	2.19
30 (86)	1.81
35 (95)	1.51
40 (104)	1.27
45 (113)	1.07

If NG, replace ambient sensor.

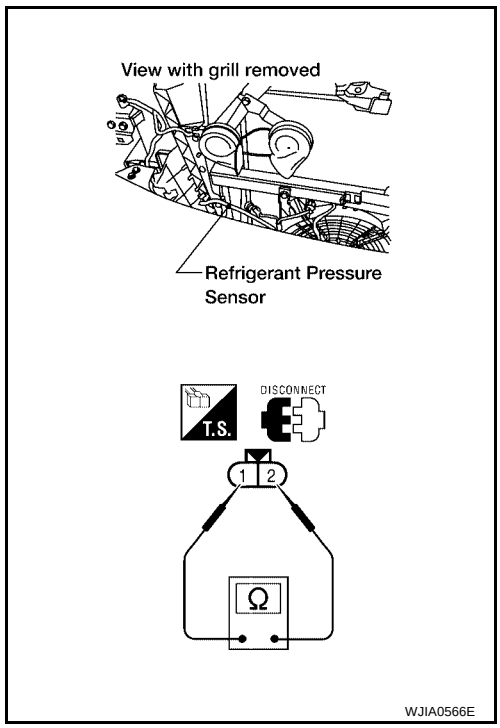

In-vehicle Sensor Circuit

EJS001VR

COMPONENT DESCRIPTION

In-vehicle Sensor

The in-vehicle sensor is located on instrument lower Driver panel. It converts variations in temperature of passenger compartment air (drawn in through the integrated fan) into a resistance value. It is then input into the front air control.

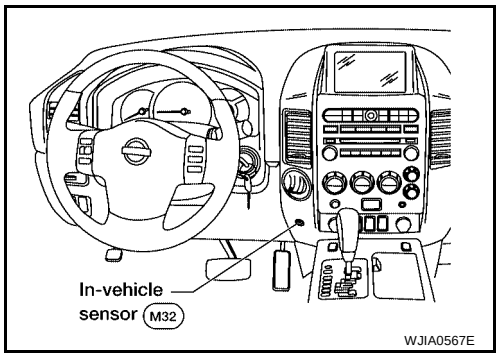

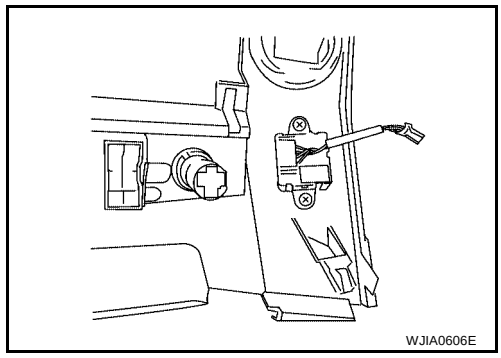

DIAGNOSTIC PROCEDURE FOR IN-VEHICLE SENSOR

SYMPTOM: In-vehicle sensor circuit is open or shorted. (30 or 31 is indicated on front air control as a result of conducting Self-diagnosis.

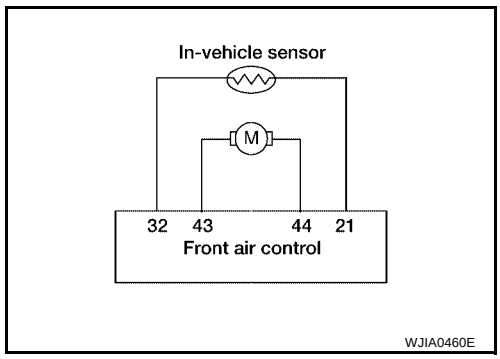

1. CHECK IN-VEHICLE SENSOR CIRCUIT

Are diagnostic codes 44 or 46 present?

YES or NO

YES >> GO TO 6.
NO >> GO TO 2.

2. CHECK VOLTAGE BETWEEN IN-VEHICLE SENSOR AND GROUND

1. Disconnect in-vehicle sensor connector.
2. Turn ignition switch ON.
3. Check voltage between in-vehicle sensor harness connector M32 terminal 4 (LG/R) and ground.

4 - Ground : Approx. 5V.

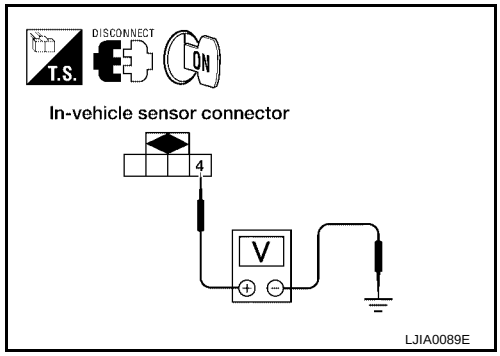

OK or NG

OK >> GO TO 3.
NG >> GO TO 5.

3. CHECK CIRCUIT CONTINUITY BETWEEN IN-VEHICLE SENSOR AND FRONT AIR CONTROL

1. Turn ignition switch OFF.
2. Disconnect front air control connector M49.
3. Check continuity between in-vehicle sensor harness connector M32 terminal 1 (V/R) and front air control harness connector M49 terminal 21 (V/R).

1 - 21 : Continuity should exist.

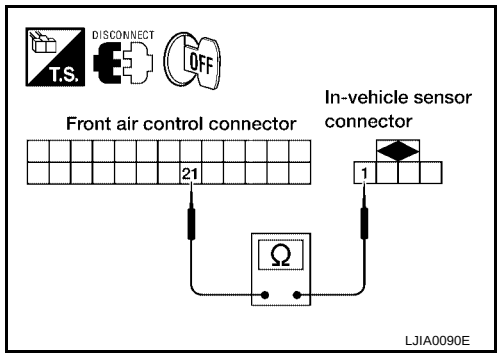

OK or NG

OK >> GO TO 4.
NG >> Repair harness or connector.

4. CHECK IN-VEHICLE SENSOR

Refer to ATC-129, "In-vehicle Sensor" .

OK or NG

OK >> 1. Replace front air control.
2. Go to ATC-53, "A/C System Self-diagnosis Function" and perform self-diagnosis.

NG >> 1. Replace in-vehicle sensor.
2. Go to ATC-53, "A/C System Self-diagnosis Function" and perform self-diagnosis.

5. CHECK CIRCUIT CONTINUITY BETWEEN IN-VEHICLE SENSOR AND FRONT AIR CONTROL

1. Turn ignition switch OFF.
2. Disconnect front air control connector.
3. Check continuity between in-vehicle sensor harness connector M32 terminal 4 (LG/R) and front air control harness connector M50 terminal 32 (LG/R).

   4 - 32 : Continuity should exist.

4. Check continuity between in-vehicle sensor harness connector M32 terminal 4 (LG/R) and ground.

   4 - Ground Continuity should not exist.

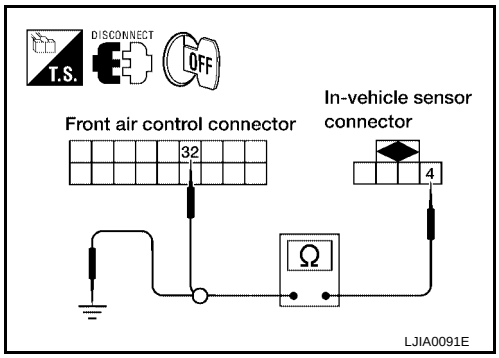

OK or NG

OK >> 1. Replace front air control.
2. Go to self-diagnosis ATC-53, "A/C System Self-diagnosis Function" and perform self-diagnosis.

NG >> Repair harness or connector.

6. CHECK CIRCUIT CONTINUITY BETWEEN IN-VEHICLE SENSOR MOTOR AND FRONT AIR CONTROL (SELF-DIAGNOSIS CODES 44 OR 46)

1. Turn ignition switch OFF.
2. Disconnect front air control connector and in-vehicle sensor connector.
3. Check continuity between in-vehicle sensor harness connector M32 terminal 2 (O/B) and 3 (BR/Y) and front air control harness connector M50 terminal 44 (O/B) and 43 (BR/Y).

   2 - 44 : Continuity should exist.
   3 - 43 : Continuity should exist.

4. Check continuity between in-vehicle sensor harness connector M32 terminal 2 (O/B) and 3 (BR/Y) and ground.

   2, 3 - Ground :Continuity should not exist.

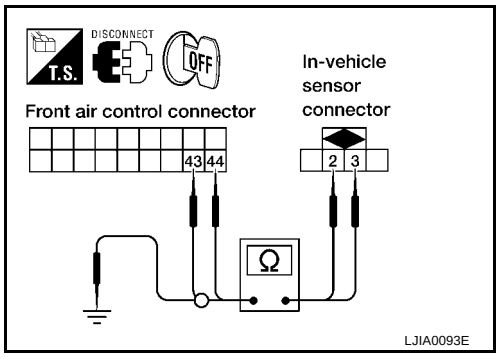

OK or NG

OK >> 1. Replace front air control.
2. Go to ATC-53, "A/C System Self-diagnosis Function" and perform self-diagnosis.

NG >> Repair harness or connector.

COMPONENT INSPECTION

In-vehicle Sensor

After disconnecting in-vehicle sensor connector M32, measure resistance between terminals 1 and 2 at sensor component side, using the table below.

Temperature °C (°F)	Resistance kΩ
–15 (5)	21.40
–10 (14)	16.15
–5 (23)	12.29
0 (32)	9.41
5 (41)	7.27
10 (50)	5.66
15 (59)	4.45
20 (68)	3.51
25 (77)	2.79
30 (86)	2.24
35 (95)	1.80
40 (104)	1.45
45 (113)	1.18

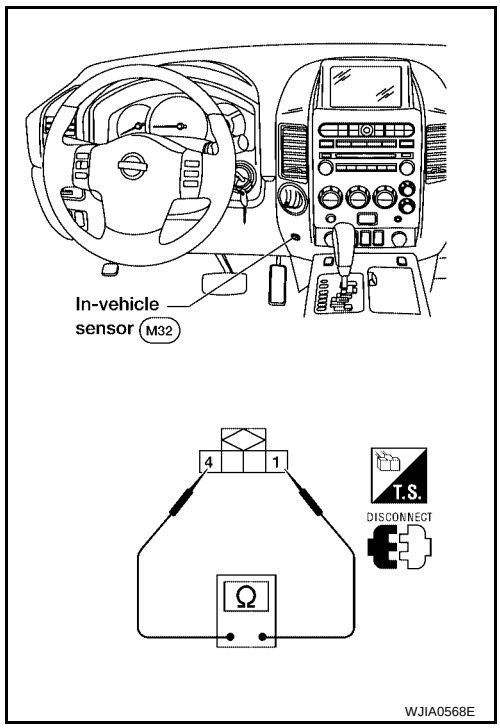

If NG, replace in-vehicle sensor.

Optical Sensor Circuit

EJS001VS

COMPONENT DESCRIPTION

The optical sensor is located on the passenger side defroster grille. It detects sunload entering through windshield by means of a photo diode. The sensor converts the sunload into a current value which is then input into the front air control.

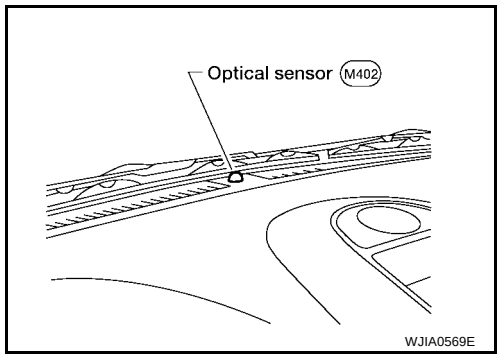

OPTICAL INPUT PROCESS

The front air control includes a processing circuit which averages the variations in detected sunload over a period of time. This prevents adjustments in the ATC system operation due to small or quick variations in detected sunload.

For example, consider driving along a road bordered by an occasional group of large trees. The sunload detected by the optical sensor will vary whenever the trees obstruct the sunlight. The processing circuit averages the detected sunload over a period of time, so that the (insignificant) effect of the trees momentarily obstructing the sunlight does not cause any change in the ATC system operation. On the other hand, shortly after entering a long tunnel, the system will recognize the change in sunload, and the system will react accordingly.

DIAGNOSTIC PROCEDURE FOR OPTICAL SENSOR

SYMPTOM: Optical sensor circuit is open or shorted. [50 (Driver) or 52 (Passenger) is indicated on front air control as a result of conducting self-diagnosis.]

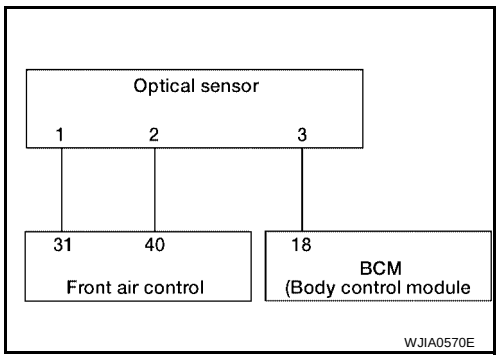

1. CHECK CIRCUIT CONTINUITY BETWEEN OPTICAL SENSOR AND FRONT AIR CONTROL

1. Turn ignition switch OFF.
2. Disconnect front air control connector and optical sensor connector.
3. Check continuity between optical sensor harness connector M402 terminal 1 (W/V) and 2 (G/O) and front air control harness connector M50 terminal 31 (W/V) and 40 (G/O).

   1 - 31 : Continuity should exist.

   2 - 40 : Continuity should exist.

4. Check continuity between optical sensor harness connector M402 terminal 1 (W/V) and 2 (G/O) and ground.

   1, 2 - Ground. : Continuity should not exist.

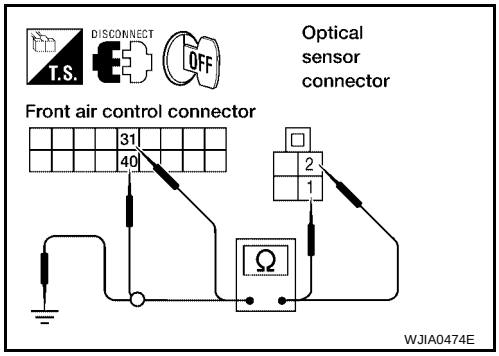

OK or NG

OK >> GO TO 2.
NG >> Repair harness or connector.

2. CHECK CIRCUIT CONTINUITY BETWEEN OPTICAL SENSOR AND BCM

1. Turn ignition switch OFF.
2. Disconnect BCM connector and optical sensor connector.
3. Check continuity between optical sensor harness connector M402 terminal 3 (P) and BCM harness connector M18 terminal 18 (P).

   3 - 18 : Continuity should exist.

4. Check continuity between optical sensor harness connector M402 terminal 3 (P) and ground.

   3 - Ground : Continuity should not exist.

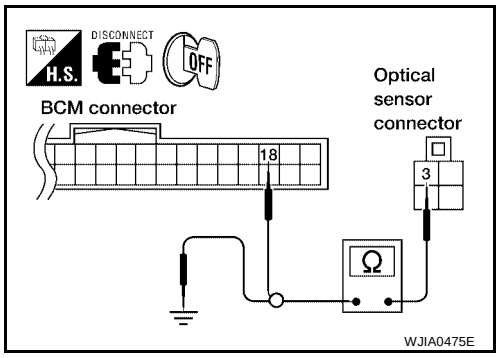

OK or NG

OK >> Replace optical sensor.
NG >> Repair harness or connector.

Intake Sensor Circuit

EJS001VT

COMPONENT DESCRIPTION

Intake Sensor

The intake sensor is located on the heater & cooling unit. It converts temperature of air after it passes through the evaporator into a resistance value which is then input to the front air control.

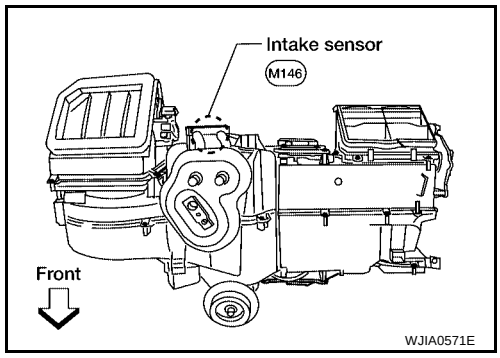

DIAGNOSTIC PROCEDURE FOR INTAKE SENSOR

SYMPTOM: Intake sensor circuit is open or shorted. (56 or 57 is indicated on front air control as a result of conducting Self-diagnosis).

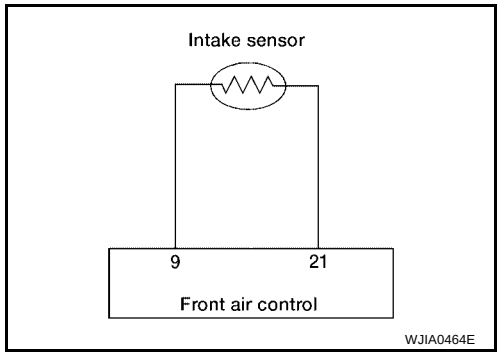

1. CHECK VOLTAGE BETWEEN INTAKE SENSOR AND GROUND

1. Disconnect intake sensor connector.
2. Turn ignition switch ON.
3. Check voltage between intake sensor harness connector M146 terminal 2 (L/R) and ground.

2 - Ground : Approx. 5V

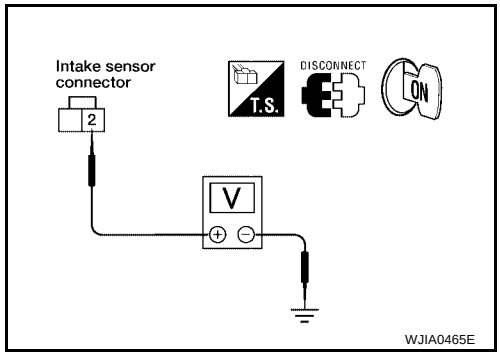

OK or NG

OK >> GO TO 2.
NG >> GO TO 4.

2. CHECK CIRCUIT CONTINUITY BETWEEN INTAKE SENSOR AND FRONT AIR CONTROL

1. Turn ignition switch OFF.
2. Disconnect front air control connector.
3. Check continuity between intake sensor harness connector M146 terminal 1 (V/R) and front air control harness connector M49 terminal 21 (V/R).

1 - 21 : Continuity should exist.

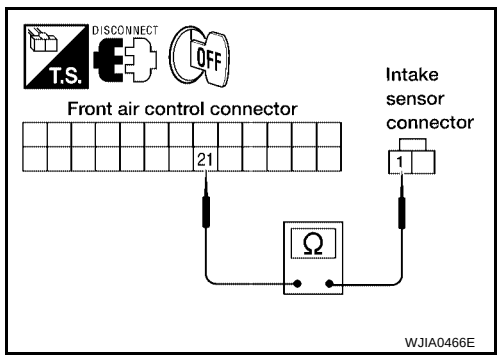

OK or NG

OK >> GO TO 3.
NG >> Repair harness or connector.

3. CHECK INTAKE SENSOR

Refer to ATC-132, "Intake Sensor" .

OK or NG

OK >> 1. Replace front air control.
2. Go to self-diagnosis ATC-53, "A/C System Self-diagnosis Function" and perform self-diagnosis.

NG >> 1. Replace intake sensor.
2. Go to self-diagnosis ATC-53, "A/C System Self-diagnosis Function" and perform self-diagnosis.

4. CHECK CIRCUIT CONTINUITY BETWEEN INTAKE SENSOR AND FRONT AIR CONTROL

1. Turn ignition switch OFF.
2. Disconnect front air control connector.
3. Check continuity between intake sensor harness connector M146 terminal 2 (L/R) and front air control harness connector M49 terminal 9 (L/R).

2 - 9 : Continuity should exist.

4. Check continuity between intake sensor harness connector M146 terminal 2 (L/R) and ground.

2 - Ground : Continuity should not exist.

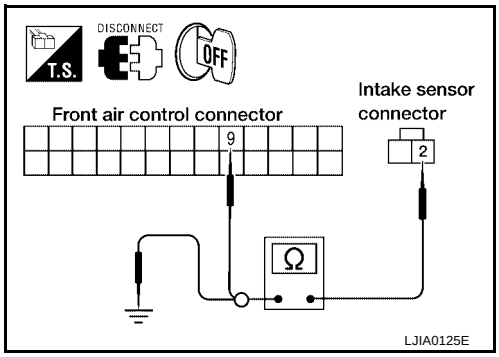

OK or NG

OK >> 1. Replace front air control.
2. Go to self-diagnosis ATC-53, "A/C System Self-diagnosis Function" and perform self-diagnosis.

NG >> Repair harness or connector.

COMPONENT INSPECTION

Intake Sensor

After disconnecting intake sensor connector, measure resistance between terminals 1 and 2 at sensor harness side, using the table below.

Temperature °C (°F)	Resistance kΩ
–15 (5)	209.0
–10 (14)	160.0
–5 (23)	123.0
0 (32)	95.8
5 (41)	74.9
10 (50)	58.9
15 (59)	46.7
20 (68)	37.3
25 (77)	30.0
30 (86)	24.2
35 (95)	19.7
40 (104)	16.1
45 (113)	13.2

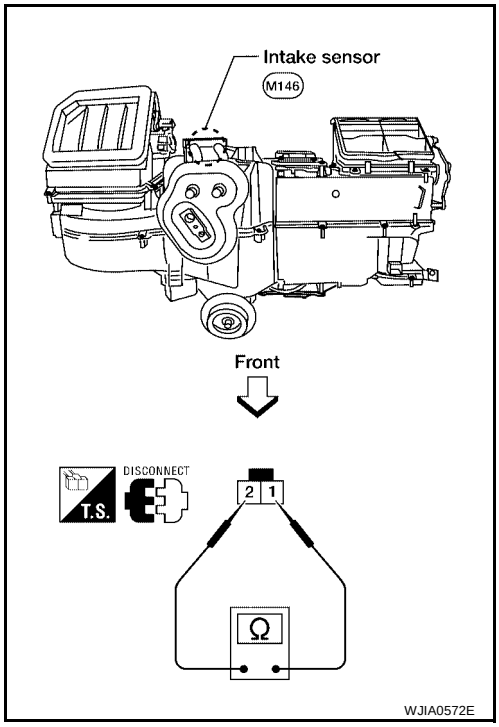

If NG, replace intake sensor.

CONTROL UNIT

PFP:27500

Removal and Installation

EJS001VU

FRONT AIR CONTROL

Removal

1. Remove the five control knobs from the front air control unit.
2. Remove the cluster lid C. Refer to IP-11, "CLUSTER LID C" .
3. Remove the four screws securing the front air control unit to cluster lid C.
4. Remove the front air control unit.

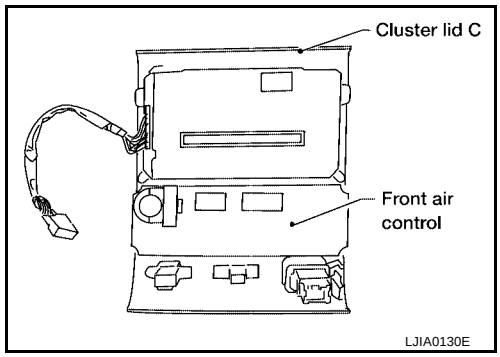

Installation

Installation is in the reverse order of removal.

REAR AIR CONTROL

Removal

1. Remove the overhead console from the headliner. Refer to EI-33, "HEADLINING" .
2. Remove the four screws and remove the rear air control.

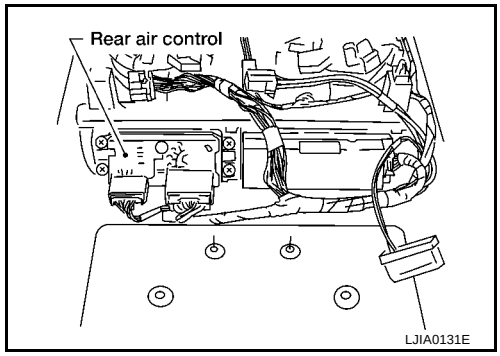

Installation

Installation is in the reverse order of removal.

AMBIENT SENSOR

PFP:27722

Removal and Installation

EJS001VV

REMOVAL

1. Disconnect the ambient sensor electrical connector.

   NOTE:
   The ambient sensor is located behind the front bumper, in front of the condenser.

2. Release the ambient sensor clip and then remove the ambient sensor.

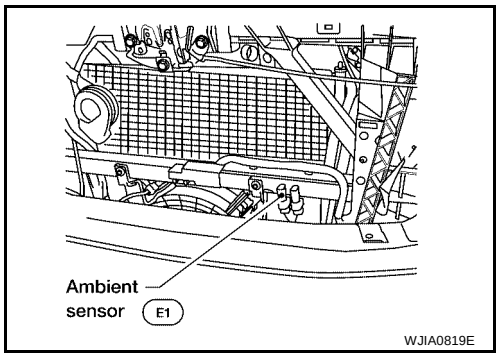

INSTALLATION

Installation is in the reverse order of removal.

IN-VEHICLE SENSOR

PFP:27720

Removal and Installation

EJS001VW

REMOVAL

1. Remove the cluster lid D. Refer to IP-12, "CLUSTER LID D" .
2. Remove the two screws and remove the in-vehicle sensor.

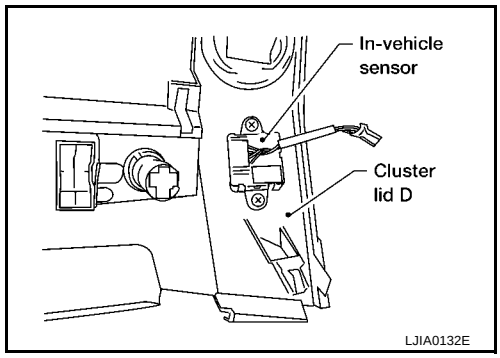

INSTALLATION

Installation is in the reverse order of removal.

OPTICAL SENSOR

PFP:28576

Removal and Installation

EJS001VX

The optical sensor is located in the top center of the instrument panel. Refer to LT-63, "Removal and Installation of Optical Sensor" .

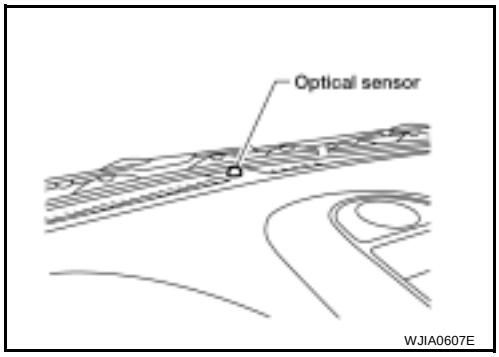

INTAKE SENSOR

PFP:27723

Removal and Installation

EJS001VY

REMOVAL

1. Remove the instrument panel. Refer to IP-10, "Removal and Installation" .
2. Disconnect the intake sensor electrical connector.

   NOTE:
   The intake sensor is located on the top of the front heater and cooling unit assembly next to the A/C evaporator cover.
3. Twist the intake sensor to remove the intake sensor from the front heater and cooling unit assembly.

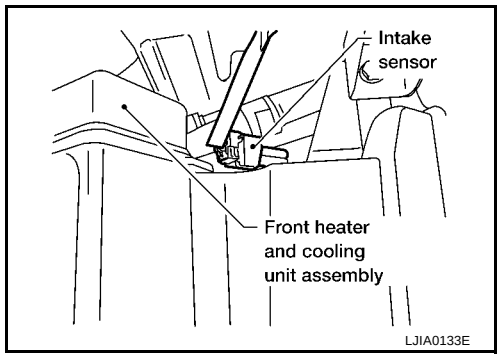

INSTALLATION

Installation is in the reverse order of removal.

BLOWER MOTOR

PFP:27226

Components

EJS001VZ

Front Blower Motor

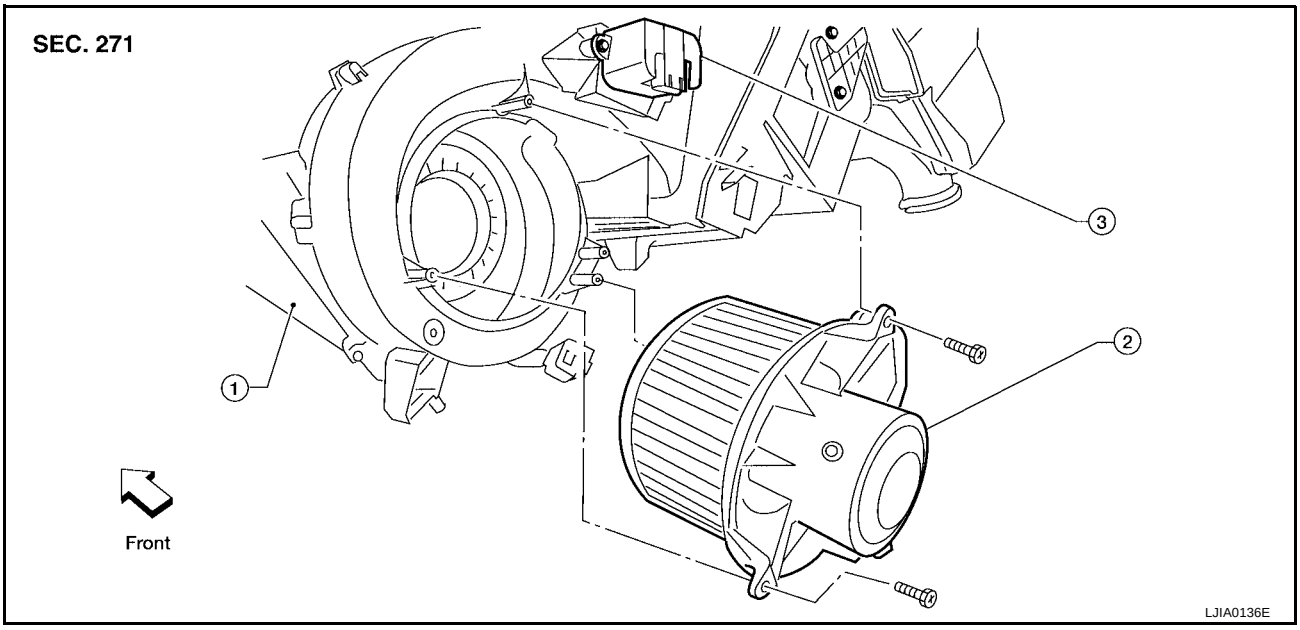

1. Front heater and cooling unit assembly
2. Front blower motor
3. Variable blower control

Rear Blower Motor

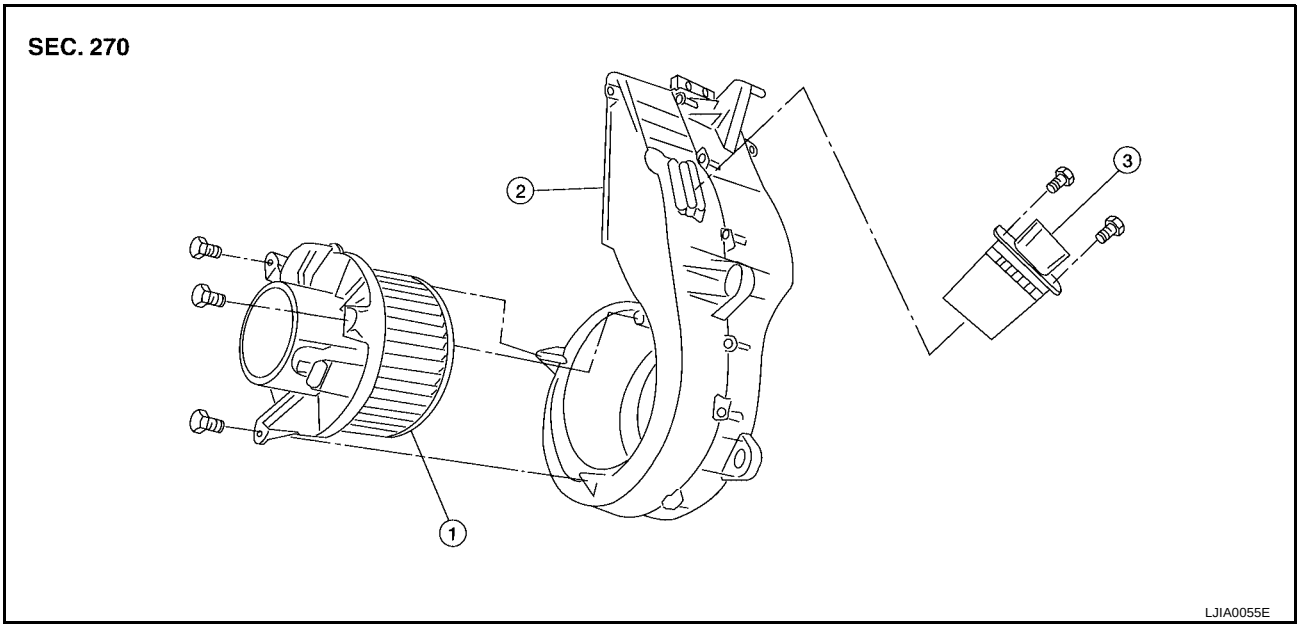

1. Rear blower motor
2. Rear blower motor case
3. Rear blower motor resistor

Removal and Installation

EJS001W0

FRONT BLOWER MOTOR

Removal

1. Remove the glove box assembly. Refer to IP-10, "Removal and Installation" .
2. Disconnect the front blower motor electrical connector.
3. Remove the three screws and remove the front blower motor.

Installation

Installation is in the reverse order of removal.

REAR BLOWER MOTOR

Removal

1. Remove the rear RH interior trim panel. Refer to EI-31, "CENTER PILLAR LOWER FINISHER" .
2. Disconnect the rear blower motor electrical connector.
3. Remove the three screws and remove the rear blower motor.

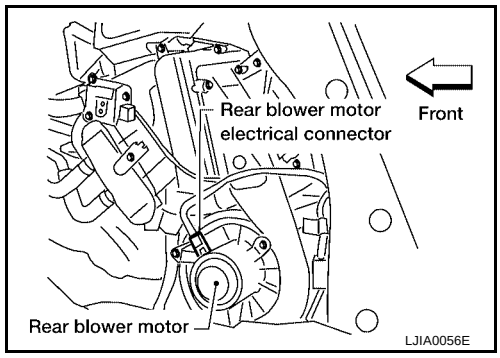

Installation

Installation is in the reverse order of removal.

IN-CABIN MICROFILTER

PFP:27277

Removal and Installation

EJS001W1

FUNCTION

The air inside the passenger compartment is filtered by the in-cabin microfilters when the heater or A/C controls are set on either the recirculation or fresh mode. The two in-cabin microfilters are located in the front heater and cooling unit assembly. The rear heater and cooling unit assembly only draws in air from the passenger compartment to recirculate into the passenger compartment, so the rear heater and cooling unit assembly is not equipped with in-cabin microfilters.

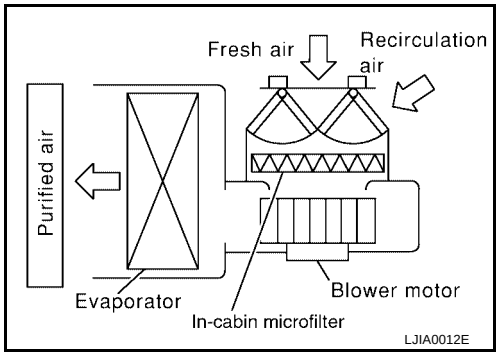

REPLACEMENT TIMING

Replacement of the two in-cabin microfilters is recommended on a regular interval depending on the driving conditions. Refer to MA-7, "PERIODIC MAINTENANCE" . It may also be necessary to replace the two in-cabin microfilters as part of a component replacement if the in-cabin microfilters are damaged.

REPLACEMENT PROCEDURE

1. Remove the two lower glove box hinge pins to remove the glove box from the instrument panel and let it hang from the cord.

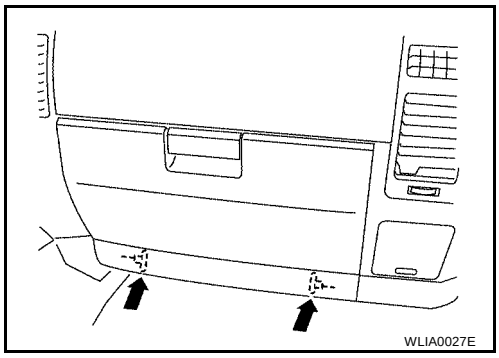

2. Remove the screw and remove the in-cabin microfilter cover.
3. Remove the in-cabin microfilters from the front heater and cooling unit assembly housing.

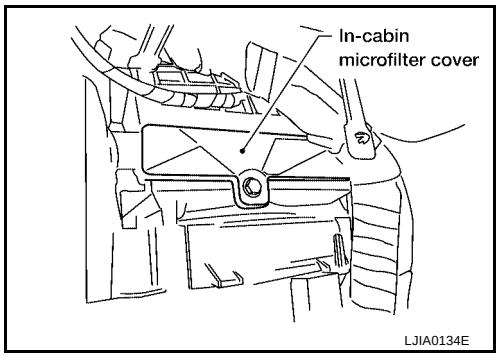

4. Insert the first new in-cabin microfilter into the front heater and cooling unit assembly housing and slide it over to the right. Insert the second new in-cabin microfilter into the front heater and cooling unit assembly housing.

   NOTE:
   The in-cabin microfilters are marked with air flow arrows. The end of the microfilter with the arrow should face the rear of the vehicle. The arrows should point downward.

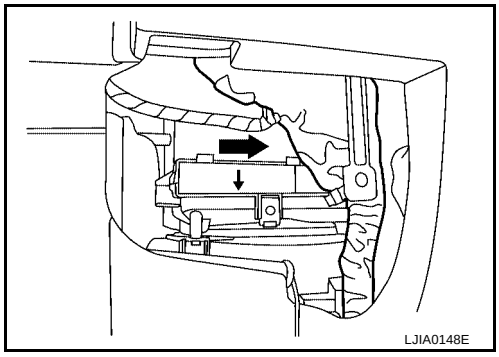

5. Install the in-cabin microfilter cover.

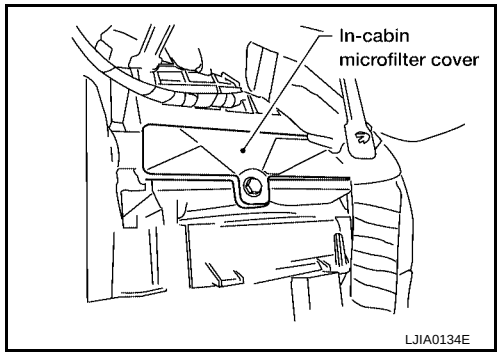

6. Install the lower glove box in the instrument panel and secure it with the two hinge pins.

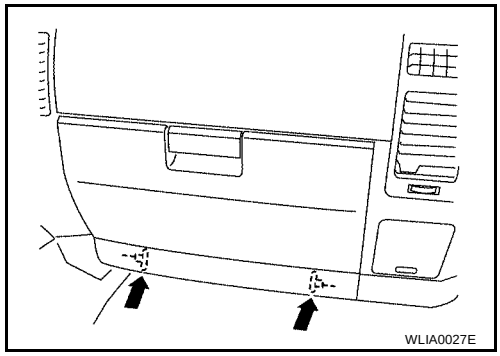

HEATER & COOLING UNIT ASSEMBLY

PFP:27110

Components

EJS001W2

Front Heater and Cooling Unit Assembly

SEC. 271 • 276 • 278

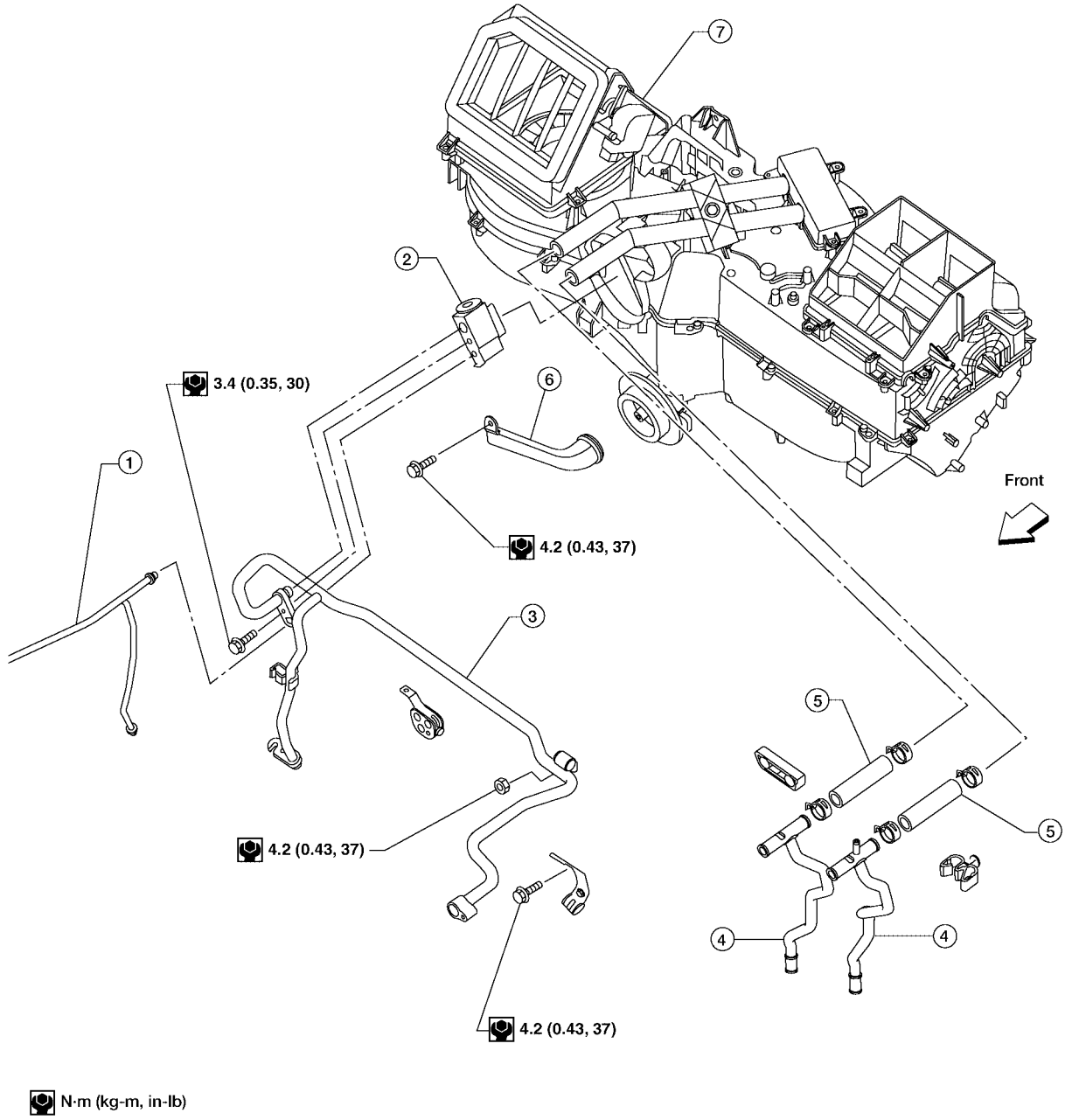

WJIA0957E

1. High-pressure A/C pipe
2. Front expansion valve
3. Low-pressure A/C pipe
4. Front heater core pipe
5. Front heater core hose
6. A/C drain hose
7. Front heater and cooling unit assembly

Rear Heater and Cooling Unit Assembly

SEC. 270 • 276

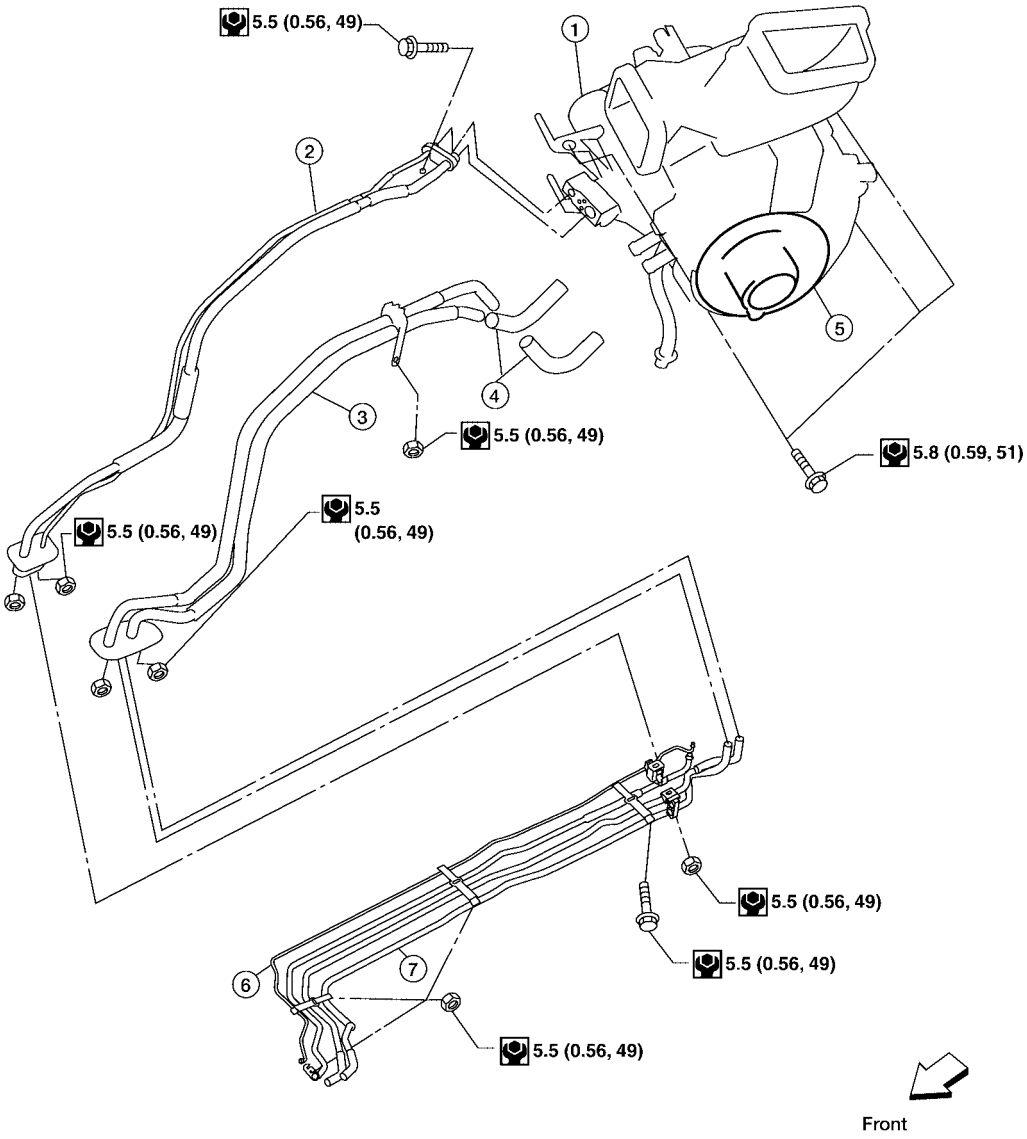

N·m (kg-m, in-lb)

LJIA0066E

1. Rear heater and cooling unit assembly
2. Rear A/C pipes
3. Rear heater core pipes
4. Rear heater core hose
5. Rear blower motor
6. Underfloor rear A/C pipes
7. Underfloor rear heater core pipes

Removal and Installation

EJS001W3

FRONT HEATER AND COOLING UNIT ASSEMBLY

Removal

1. Discharge the refrigerant from the A/C system. Refer to ATC-160, "Discharging Refrigerant" .
2. Drain the coolant from the engine cooling system. Refer to MA-13, "DRAINING ENGINE COOLANT" .
3. Remove the cowl top extension. Refer to EI-18, "Removal and Installation" .
4. Remove the exhaust system. Refer to EX-3, "Removal and Installation" .
5. Disconnect the front heater hoses from the front heater core.
6. Disconnect the high/low pressure pipes from the front expansion valve.

7. Move the two front seats to the rearmost position on the seat track.
8. Remove the instrument panel and console panel. Refer to IP-10, "Removal and Installation" .
9. Remove the steering column. Refer to PS-9, "Removal and Installation" .
10. Disconnect the instrument panel wire harness at the RH and LH in-line connector brackets, and the fuse block (J/B) electrical connectors. Refer to PG-39, "Harness Layout" .
11. Disconnect the steering member from each side of the vehicle body.
12. Remove the front heater and cooling unit assembly with it attached to the steering member, from the vehicle.

    CAUTION:
    Use care not to damage the seats and interior trim panels when removing the front heater and cooling unit assembly with it attached to the steering member.
13. Remove the front heater and cooling unit assembly from the steering member.

Installation

Installation is in the reverse order of removal.

CAUTION:

- **Replace the O-ring of the low-pressure pipe and high-pressure pipe with a new one, and apply compressor oil to it when installing it.**
- **After charging the refrigerant, check for leaks.**

NOTE:

- Fill the engine cooling system with the specified coolant mixture. Refer to MA-14, "REFILLING ENGINE COOLANT" .
- Recharge the A/C system. Refer to ATC-160, "Evacuating System and Charging Refrigerant" .

REAR HEATER AND COOLING UNIT ASSEMBLY

Removal

1. Discharge the refrigerant from the A/C system. Refer to ATC-160, "Discharging Refrigerant" .
2. Drain the coolant from the engine cooling system. Refer to MA-13, "DRAINING ENGINE COOLANT" .
3. Disconnect the rear heater core hoses from the rear heater core.
4. Disconnect the rear A/C pipes from the rear expansion valve.
5. Remove the rear RH interior trim panel. Refer to EI-30, "Removal and Installation" .
6. Disconnect the following electrical connectors:
   - Rear blower motor
   - Rear blower motor resistor
   - Rear air mix door motor
7. Disconnect the ducts from the rear heater and cooling unit assembly.
8. Remove the rear heater and cooling unit assembly.

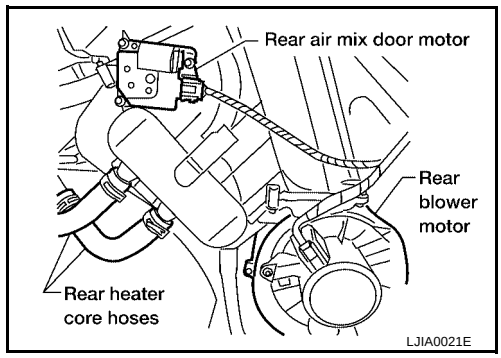

Installation

Installation is in the reverse order of removal.

CAUTION:

- **Replace the O-ring of the low-pressure pipe and high-pressure pipe with a new one, and apply compressor oil to it when installing it.**
- **After charging the refrigerant, check for leaks.**

NOTE:

- Fill the engine cooling system with the specified coolant mixture. Refer to MA-14, "REFILLING ENGINE COOLANT" .
- Recharge the A/C system. Refer to ATC-160, "Evacuating System and Charging Refrigerant" .

HEATER CORE

PFP:27140

Components

EJS001W4

Front Heater and Cooling Unit Assembly

SEC. 271

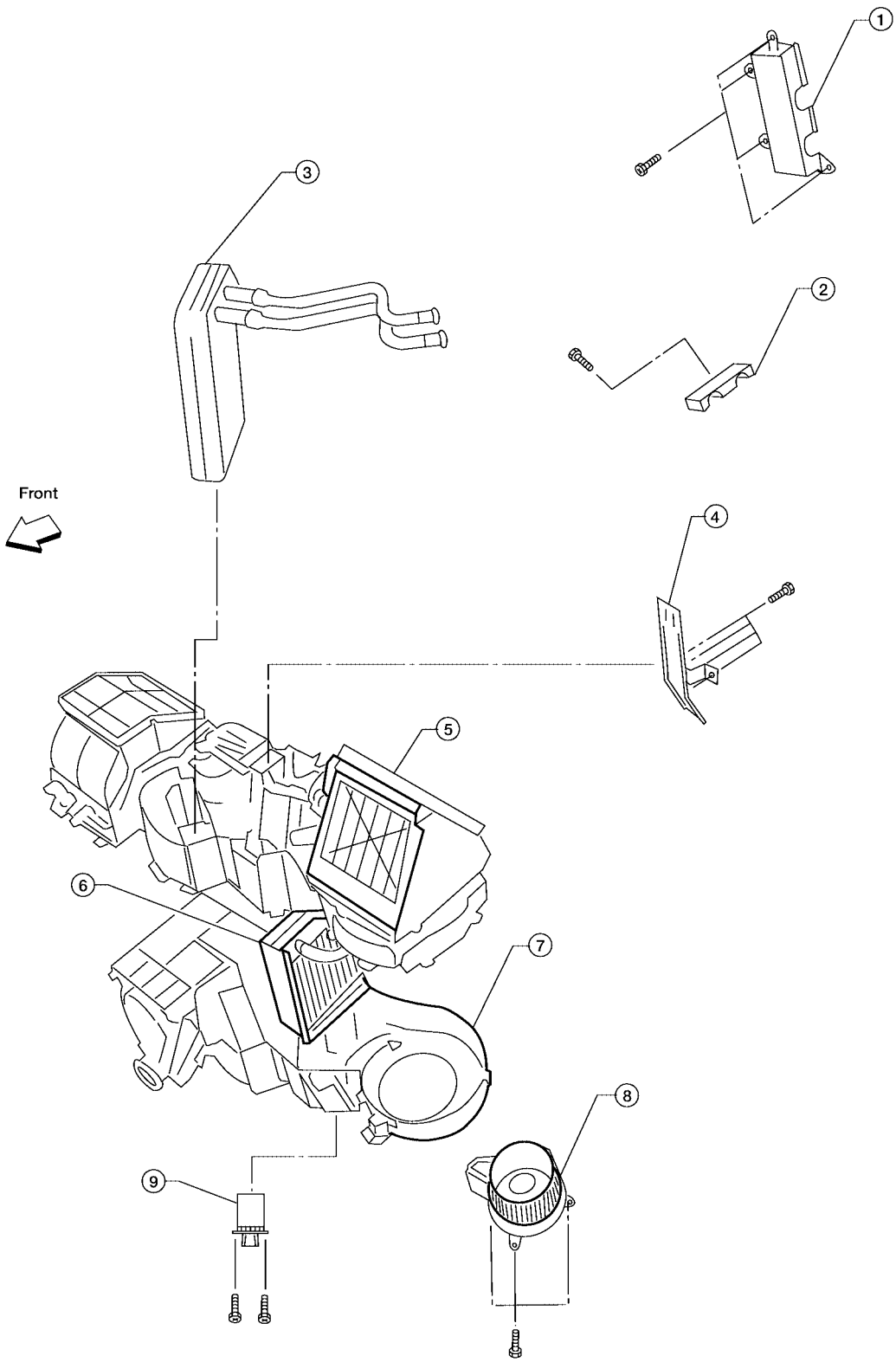

1.	Heater core cover	2.	Heater core pipe bracket	3.	Heater core
4.	Upper bracket	5.	Upper heater and cooling unit case	6.	A/C evaporator
7.	Lower heater and cooling unit case	8.	Blower motor	9.	Variable blower control

Rear Heater and Cooling Unit Assembly

SEC. 274

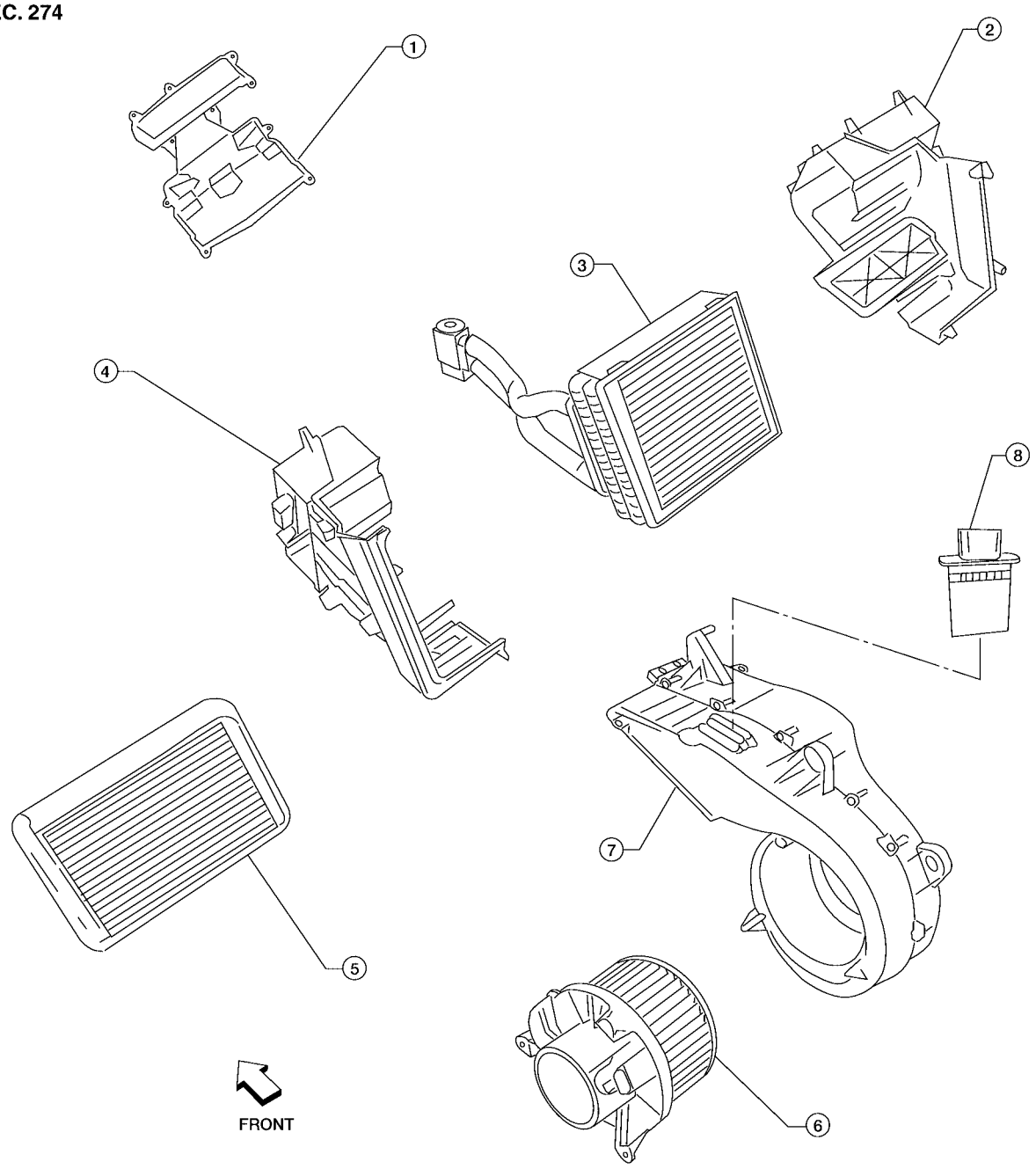

LJIA0135E

1.	Front cover	2.	Evaporator and heater core case	3.	Evaporator
4.	Side cover	5.	Heater core	6.	Blower motor
7.	Blower motor case	8.	Blower motor resistor		

Removal and Installation

EJS001W5

FRONT HEATER CORE

Removal

1. Remove the front heater and cooling unit assembly. Refer to ATC-143, "FRONT HEATER AND COOLING UNIT ASSEMBLY" .
2. Remove the four screws and remove the upper bracket.
3. Remove the four screws and remove the heater core cover.
4. Remove the heater core pipe bracket.

5. Remove the heater core.

   NOTE:
   If the in-cabin microfilters are contaminated from coolant leaking from the heater core, replace the in-cabin microfilters with new ones before installing the new heater core.

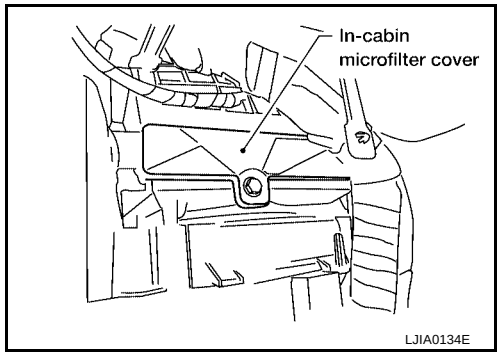

Installation

Installation is in the reverse order of removal.

REAR HEATER CORE

Removal

1. Partially drain the engine cooling system. Refer to MA-13, "DRAINING ENGINE COOLANT" .
2. Remove the rear RH interior trim panel. Refer to EI-30, "Removal and Installation" .
3. Disconnect the rear heater hoses from the heater core.

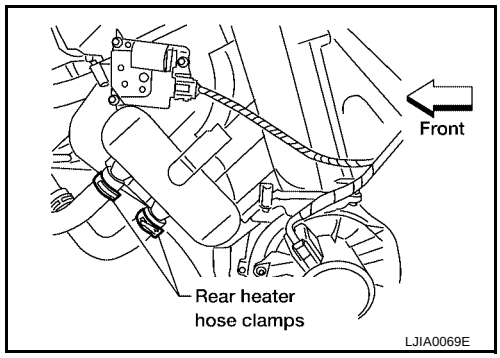

4. Remove the rear heater core bracket.
5. Remove the heater core.

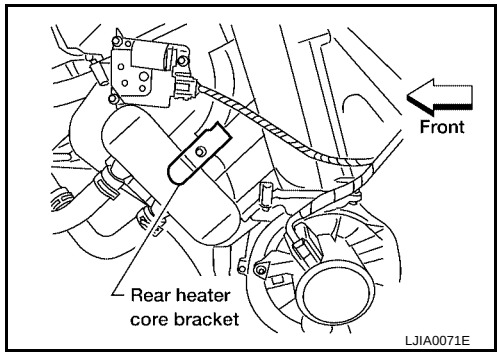

Installation

Installation is in the reverse order of removal.

DEFROSTER DOOR MOTOR

PFP:27733

Removal and Installation

EJS001W7

Defroster Door Motor - Front Heater and Cooling Unit Assembly

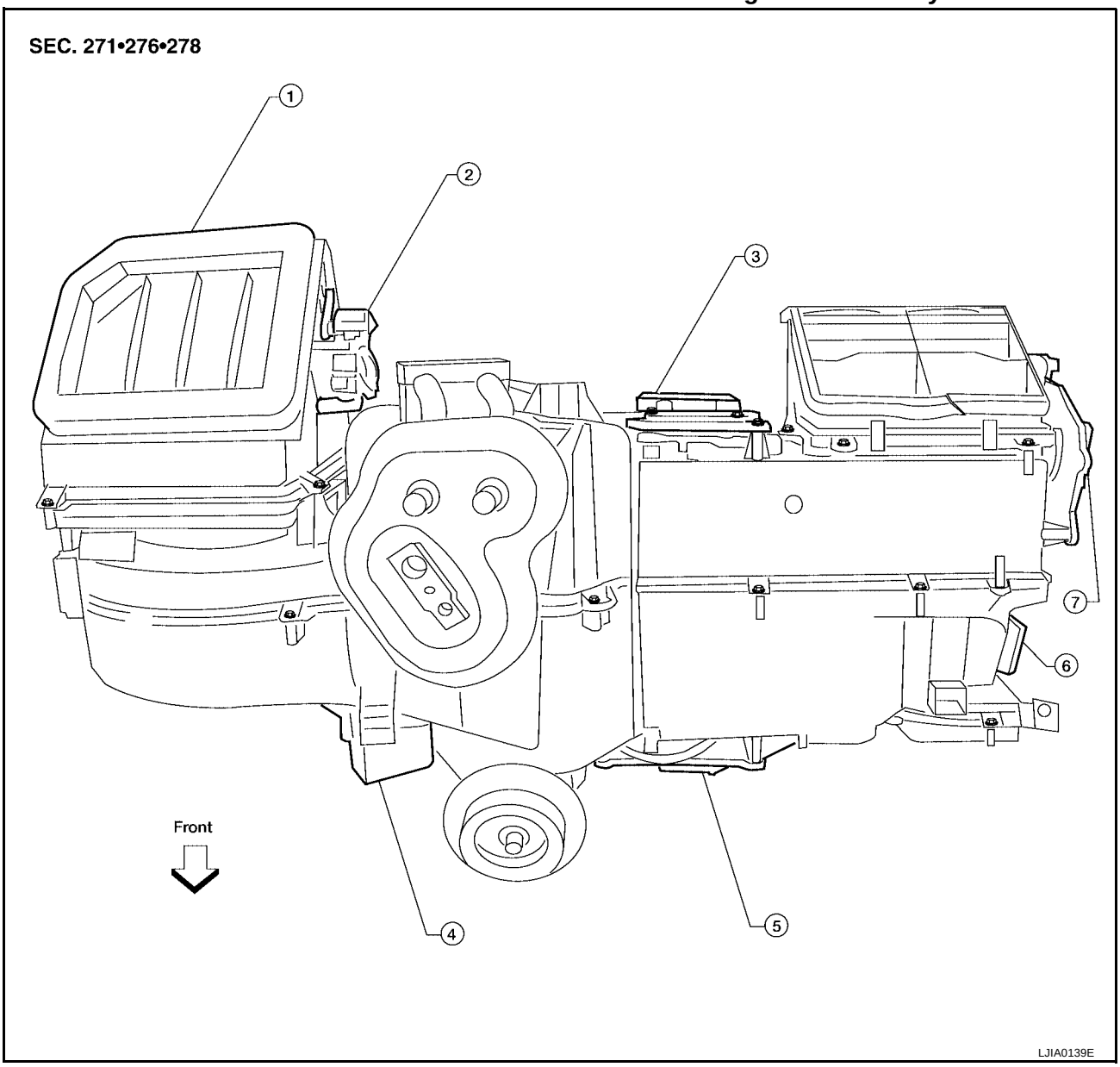

1. Front heater and cooling unit assembly
2. Intake door motor
3. Air mix door motor (driver)
4. Variable blower control
5. Air mix door motor (passenger)
6. Mode door motor
7. Defroster door motor

REMOVAL

1. Remove the front heater and cooling unit assembly. Refer to ATC-143, "FRONT HEATER AND COOLING UNIT ASSEMBLY" .
2. Remove the steering member from the front heater and cooling unit assembly.
3. Disconnect the defroster door motor electrical connector.
4. Remove the three screws and remove the defroster door motor.

INSTALLATION

Installation is in the reverse order of removal.

INTAKE DOOR MOTOR

PFP:27730

Removal and Installation

EJS001W9

Intake Door Motor - Front Heater and Cooling Unit Assembly

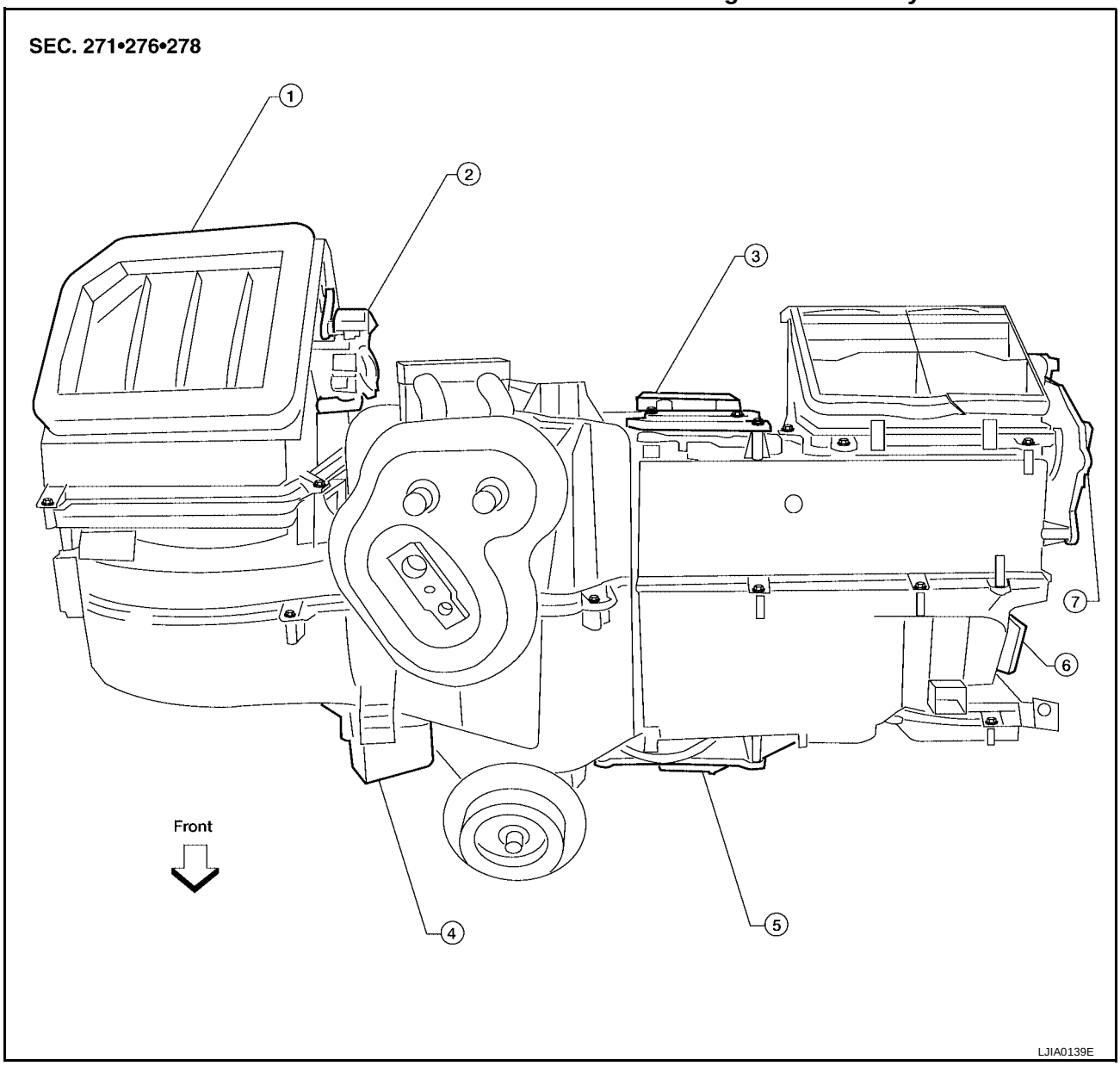

1. Front heater and cooling unit assembly	2. Intake door motor	3. Air mix door motor (driver)
4. Variable blower control	5. Air mix door motor (passenger)	6. Mode door motor
7. Defroster door motor		

REMOVAL

1. Remove the front heater and cooling unit assembly. Refer to ATC-143, "FRONT HEATER AND COOLING UNIT ASSEMBLY" .
2. Remove the steering member from the front heater and cooling unit assembly.
3. Disconnect the intake door motor electrical connector.
4. Remove the three screws and remove the intake door motor.

INSTALLATION

Installation is in the reverse order of removal.

MODE DOOR MOTOR

PFP:27731

Removal and Installation

EJS001WA

Mode Door Motor - Front Heater and Cooling Unit Assembly

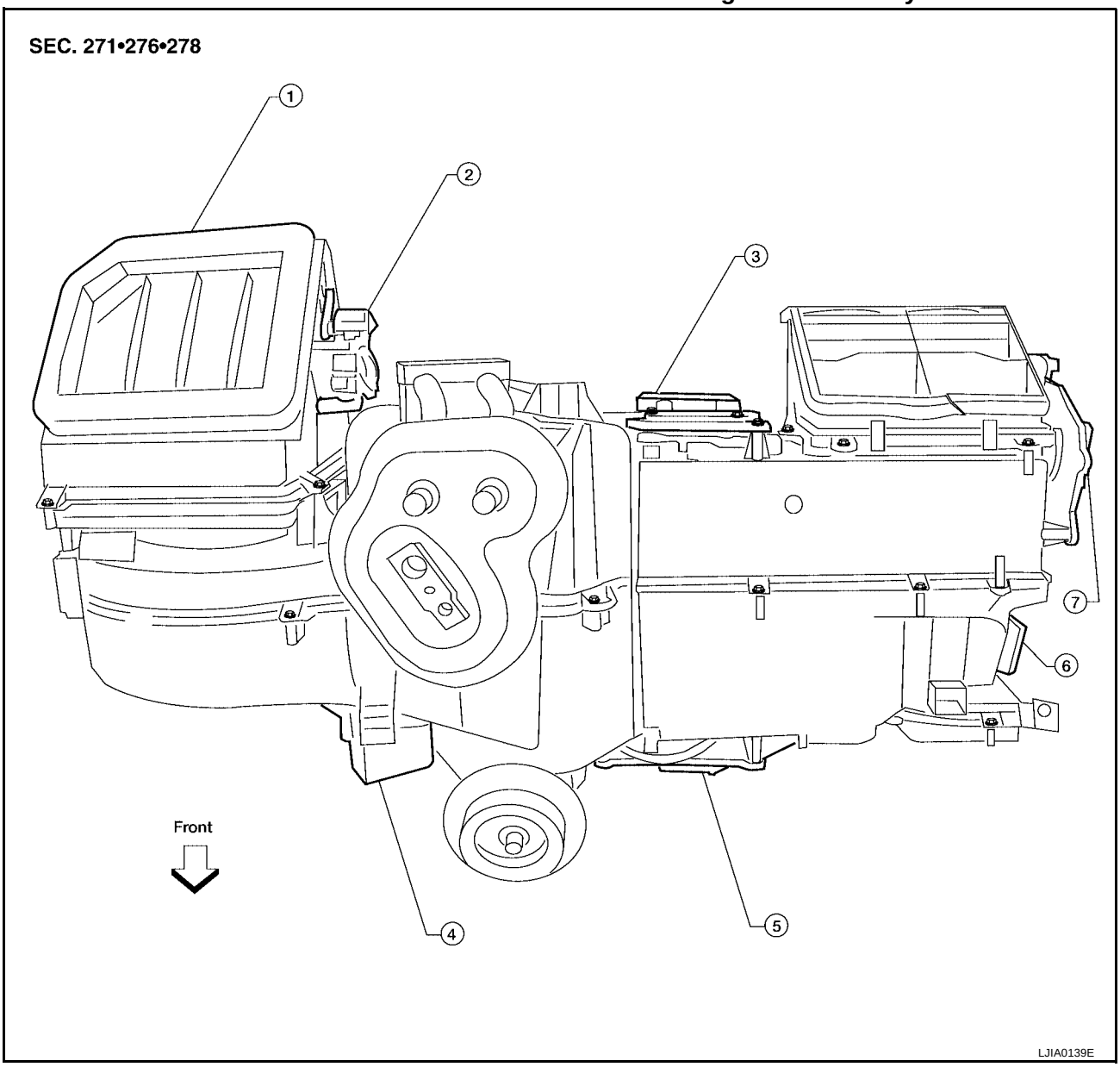

1. Front heater and cooling unit assembly
2. Intake door motor
3. Air mix door motor (driver)
4. Variable blower control
5. Air mix door motor (passenger)
6. Mode door motor
7. Defroster door motor

REMOVAL

1. Remove the front heater and cooling unit assembly. Refer to ATC-143, "FRONT HEATER AND COOLING UNIT ASSEMBLY" .
2. Remove the steering member from the front heater and cooling unit assembly.
3. Disconnect the mode door motor electrical connector.
4. Remove the two screws and remove the mode door motor.

INSTALLATION

Installation is in the reverse order of removal.

AIR MIX DOOR MOTOR

PFP:27732

Components

EJS001WB

Air Mix Door Motors - Front Heater and Cooling Unit Assembly

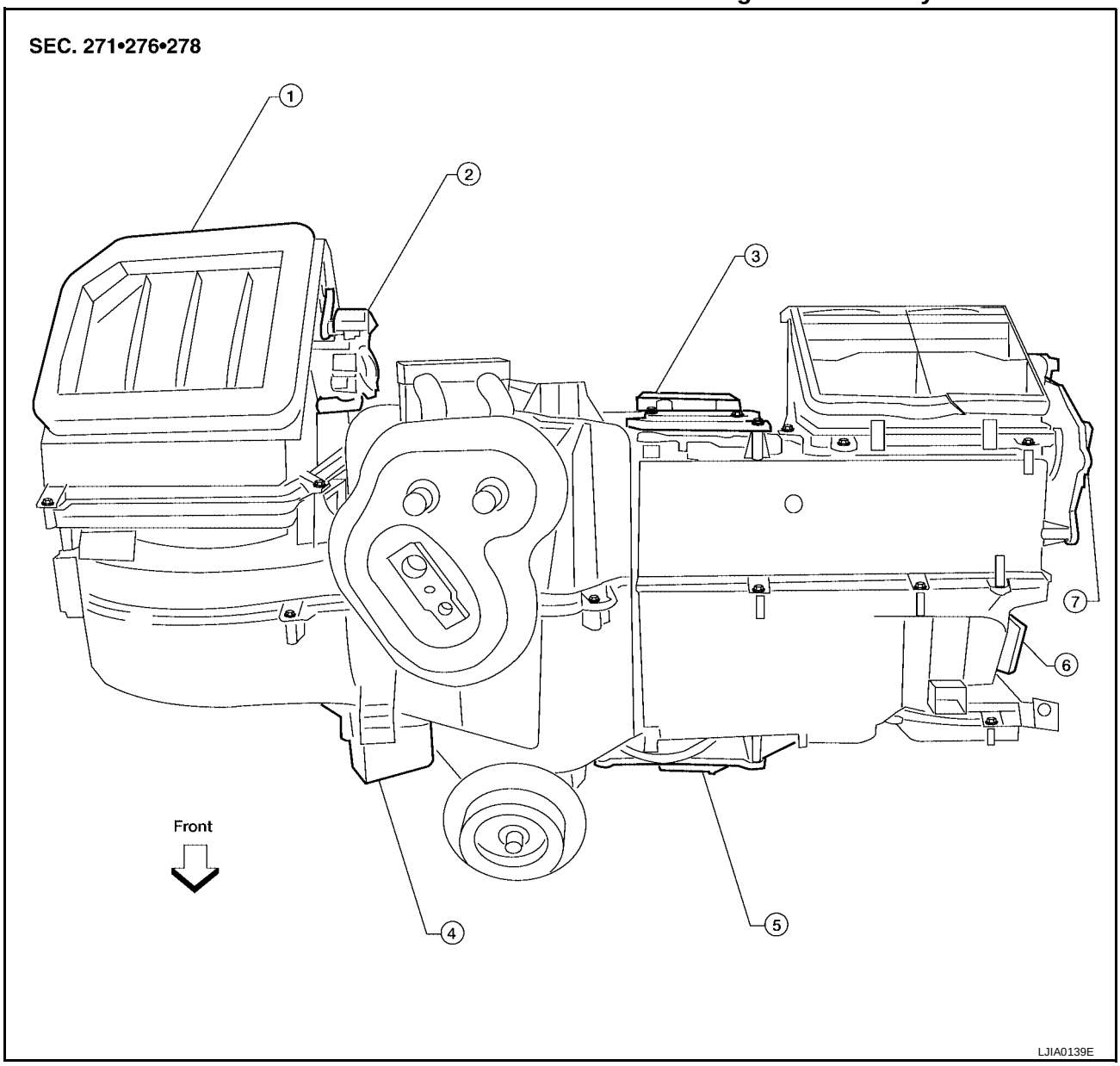

1. Front heater and cooling unit assembly	2. Intake door motor	3. Air mix door motor (driver)
4. Variable blower control	5. Air mix door motor (passenger)	6. Mode door motor
7. Defroster door motor		

Removal and Installation

EJS001WC

FRONT AIR MIX DOOR MOTOR (DRIVER)

Removal

1. Remove the front heater and cooling unit assembly. Refer to ATC-143, "FRONT HEATER AND COOLING UNIT ASSEMBLY" .
2. Remove the steering member from the front heater and cooling unit assembly.
3. Disconnect the air mix door motor electrical connector.
4. Remove the three screws and remove the air mix door motor.

Installation

Installation is in the reverse order of removal.

FRONT AIR MIX DOOR MOTOR (PASSENGER)

Removal

1. Remove the front heater and cooling unit assembly. Refer to ATC-143, "FRONT HEATER AND COOLING UNIT ASSEMBLY" .
2. Remove the steering member from the front heater and cooling unit assembly.
3. Disconnect the air mix door motor electrical connector.
4. Remove the three screws and remove the air mix door motor.

Installation

Installation is in the reverse order of removal.

REAR AIR MIX DOOR MOTOR

Removal

1. Remove the RH rear interior trim panel. Refer to EI-30, "Removal and Installation" .
2. Disconnect the rear air mix door motor electrical connector.
3. Remove the three screws and remove the rear air mix door motor.

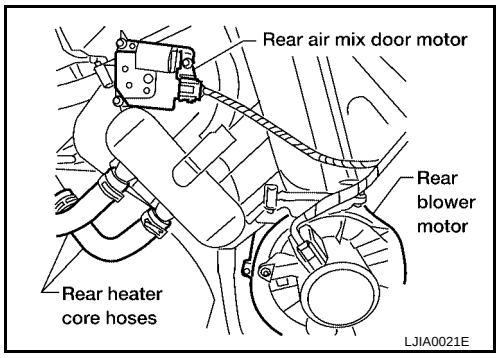

Installation

Installation is in the reverse order of removal.

VARIABLE BLOWER CONTROL

PFP:27200

Removal and Installation

EJS001WD

Variable Blower Control - Front Heater and Cooling Unit Assembly

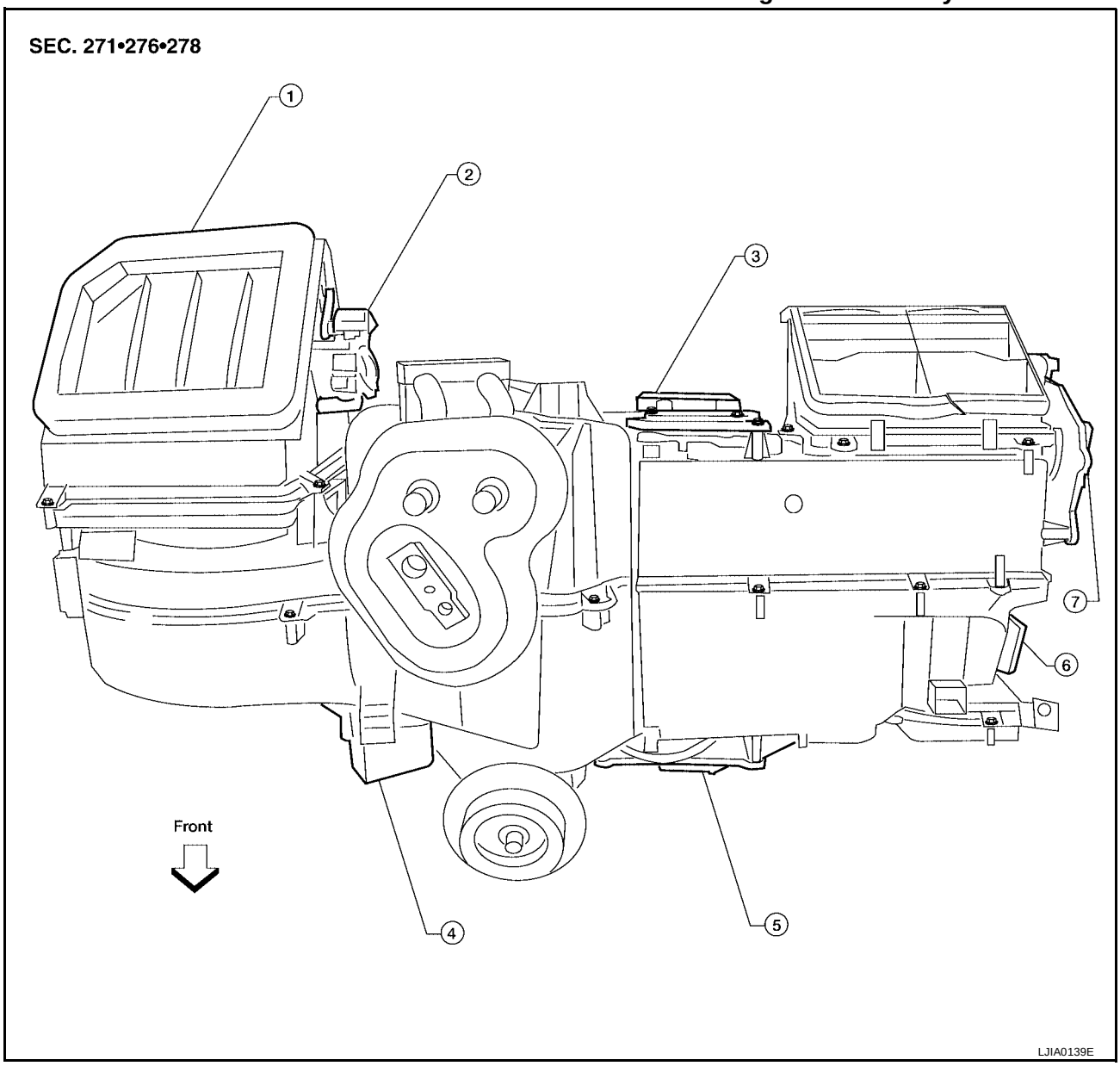

1. Front heater and cooling unit assembly
2. Intake door motor
3. Air mix door motor (driver)
4. Variable blower control
5. Air mix door motor (passenger)
6. Mode door motor
7. Defroster door motor

REMOVAL

1. Remove the front heater and cooling unit assembly. Refer to ATC-143, "FRONT HEATER AND COOLING UNIT ASSEMBLY" .
2. Remove the steering member from the front heater and cooling unit assembly.
3. Disconnect the variable blower control electrical connector.
4. Remove the two screws and remove the variable blower control.

INSTALLATION

Installation is in the reverse order of removal.

REAR BLOWER MOTOR RESISTOR

PFP:27150

Removal and Installation

EJS001WE

Rear Blower Motor Resistor

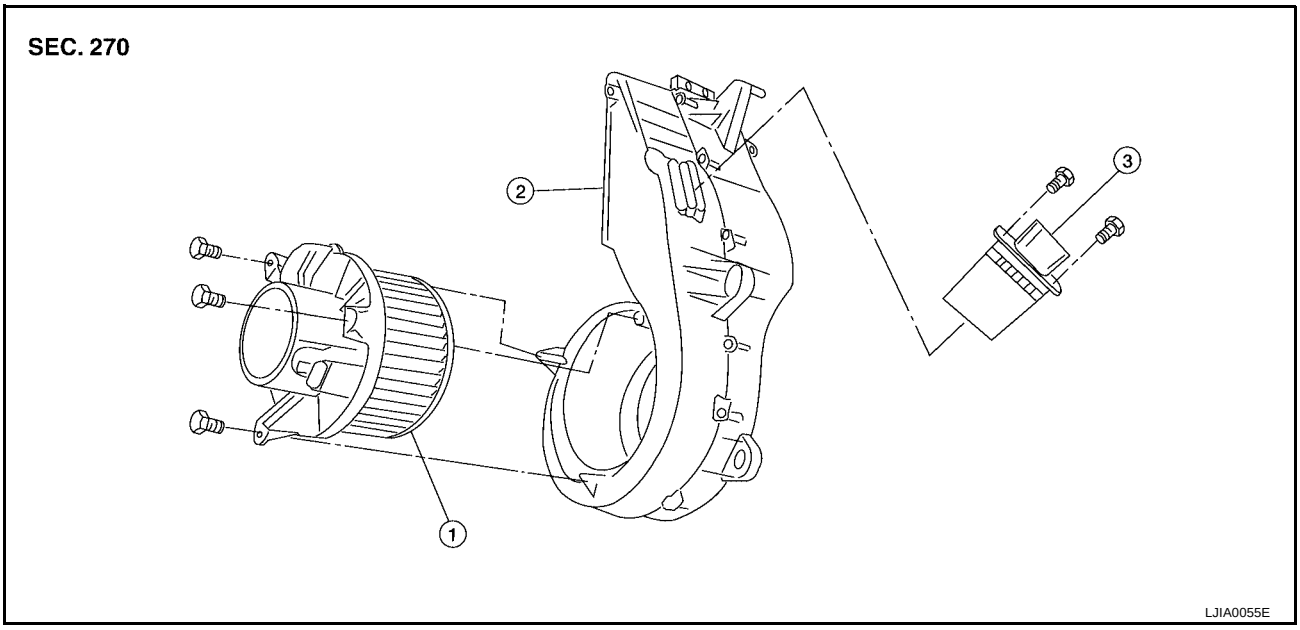

1. Rear blower motor
2. Rear blower motor case
3. Rear blower motor resistor

REMOVAL

1. Remove the rear RH interior trim panel. Refer to EI-30, "Removal and Installation" .
2. Disconnect the rear blower motor resistor electrical connector.
3. Remove the two screws and remove the rear blower motor resistor.

INSTALLATION

Installation is in the reverse order of removal.

DUCTS AND GRILLES

PFP:27860

Components

EJS001WF

Ducts - Front Heater and Cooling Unit Assembly

SEC. 270 • 271

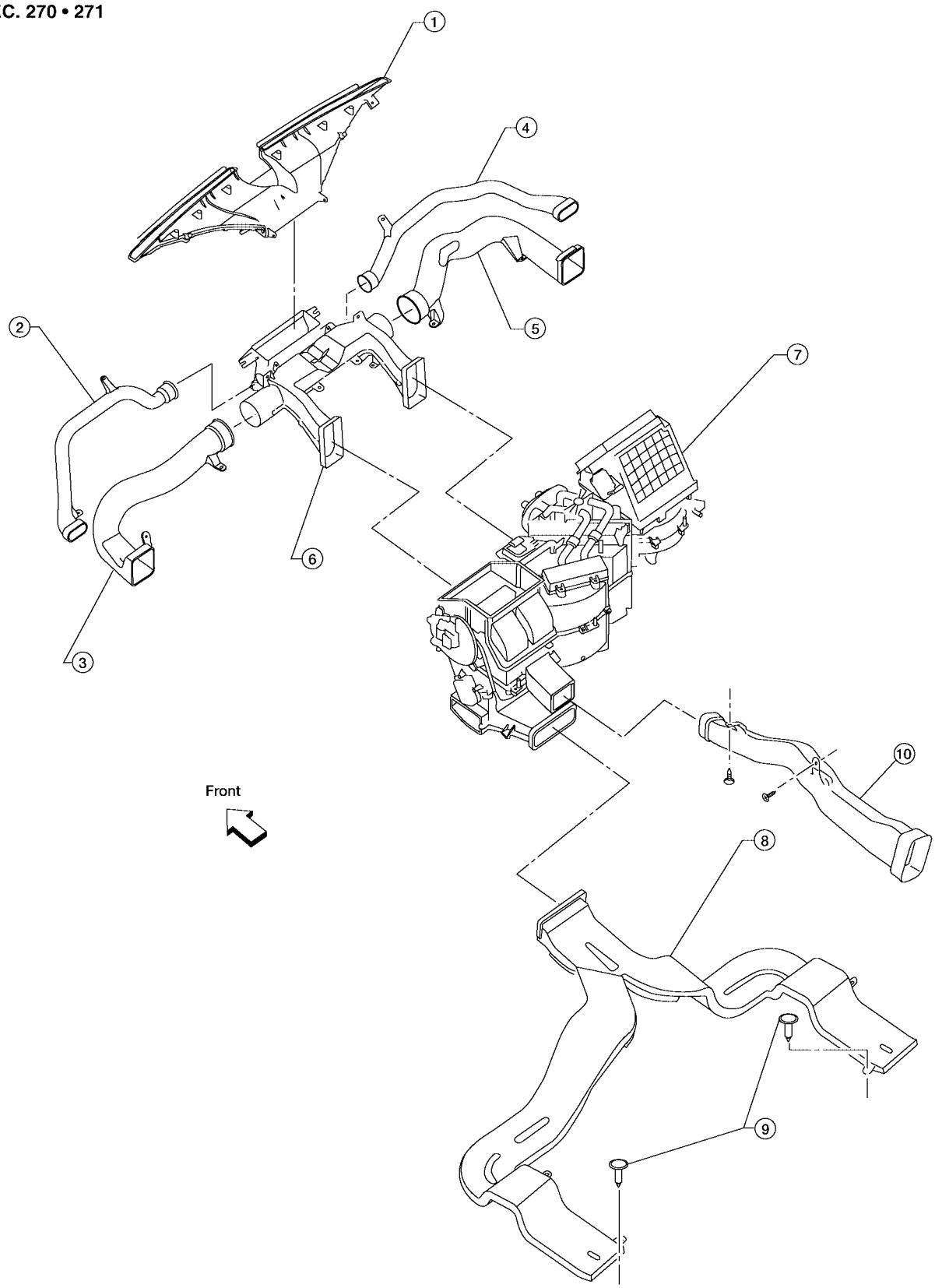

WJIA0956E

1. Defroster nozzle
2. LH side demister duct
3. LH ventilator duct
4. RH side demister duct
5. RH ventilator duct
6. Center ventilator duct
7. Front heater and cooling unit assembly
8. Floor duct
9. Clips
10. Heat duct

Ducts - Rear Heater and Cooling Unit Assembly

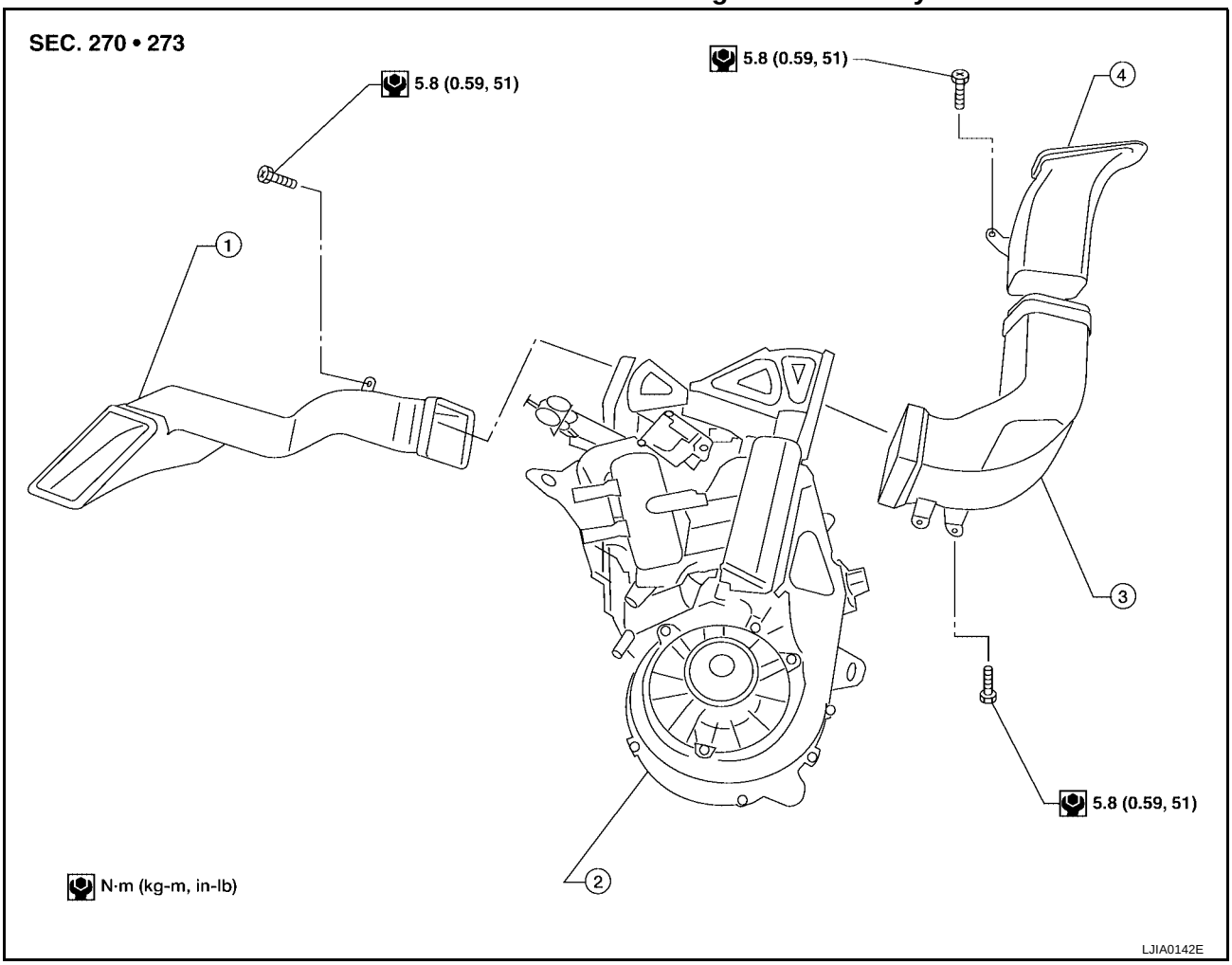

1. Rear floor duct
2. Rear heater and cooling unit assembly
3. Rear lower overhead duct
4. Rear upper overhead duct

Grilles

SEC. 685 • 970

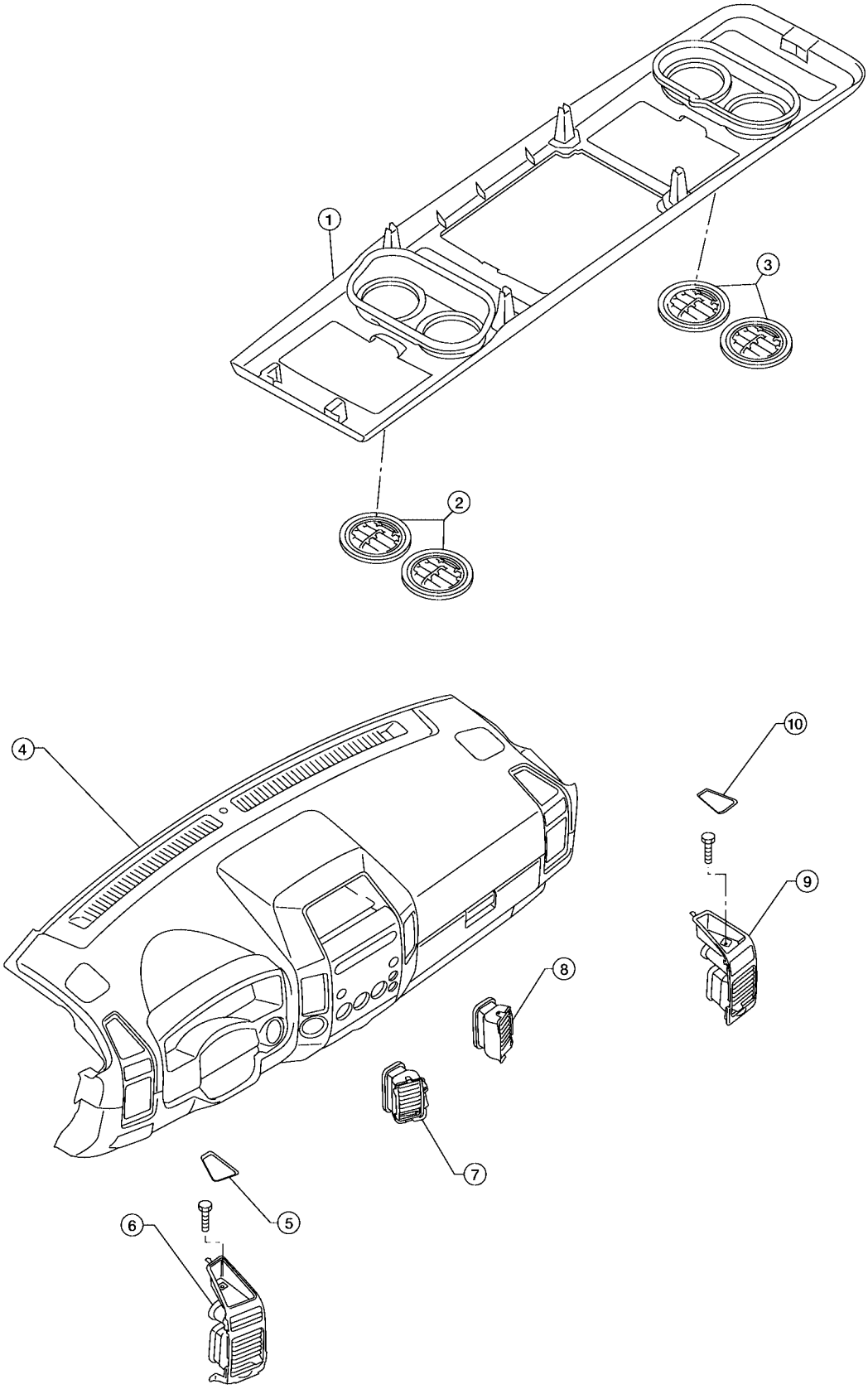

1. Overhead console trim panel
2. Overhead console front grilles (front)
3. Overhead console rear grilles (rear)
4. Instrument panel
5. Storage tray bottom cover (LH)
6. LH side ventilator and demister grille

7. LH ventilator grille
8. RH ventilator grille
9. RH side ventilator and demister grille
10. Storage tray bottom cover (RH)

Removal and Installation

EJS001WG

CENTER CONSOLE HEAT DUCT AND REAR FINISHER ASSEMBLY GRILLE

Removal

The center console must be removed and disassembled to remove the heat duct and rear finisher assembly grille. Refer to IP-15, "Center Console" .

Installation

Installation is in the reverse order of removal.

DEFROSTER NOZZLE

Removal

1. Remove the instrument panel trim. Refer to IP-10, "Removal and Installation" .
2. Remove the defroster nozzle.

Installation

Installation is in the reverse order of removal.

RH AND LH SIDE DEMISTER DUCT

Removal

1. Remove the instrument panel trim. Refer to IP-10, "Removal and Installation" .
2. Remove the RH or LH side demister duct.

Installation

Installation is in the reverse order of removal.

RH AND LH VENTILATOR DUCT

Removal

1. Remove the instrument panel trim. Refer to IP-10, "Removal and Installation" .
2. Remove the RH or LH ventilator duct.

Installation

Installation is in the reverse order of removal.

CENTER VENTILATOR DUCT

Removal

1. Remove the instrument panel trim. Refer to IP-10, "Removal and Installation" .
2. Remove the defroster nozzle.
3. Remove the RH and LH side demister ducts.
4. Remove the RH and LH ventilator ducts.
5. Remove the center ventilator duct.

Installation

Installation is in the reverse order of removal.

FLOOR DUCT

Removal

1. Remove the floor carpet. Refer to EI-32, "Removal and Installation" .
2. Remove the two clips and remove the floor duct.

Installation

Installation is in the reverse order of removal.

REAR OVERHEAD DUCTS

Removal

1. Remove the rear RH interior trim panel. Refer to EI-30, "Removal and Installation" .
2. Remove the headliner. Refer to EI-33, "HEADLINING" .

NOTE:
The rear headliner duct connected to the rear overhead duct is part of the headlining trim panel and is replaced as an assembly.

3. Remove the two bolts and remove the rear upper and lower overhead ducts.

Installation

Installation is in the reverse order of removal.

REAR FLOOR DUCT

Removal

1. Remove the rear RH interior trim panel. Refer to EI-30, "Removal and Installation" .
2. Reposition the floor carpet out of the way.
3. Remove the two bolts and remove the rear floor duct.

Installation

Installation is in the reverse order of removal.

GRILLES

Removal

1. Remove the interior trim panels as necessary. Refer to IP-10, "Removal and Installation" or EI-33, "HEADLINING" .
2. Remove the grille from the interior trim panel.

   NOTE:
   To remove the overhead console front and rear grilles, turn the grille counter-clockwise to release the grille from the overhead console trim panel.

Installation

Installation is in the reverse order of removal.

REFRIGERANT LINES

PFP:92600

HFC-134a (R-134a) Service Procedure

EJS001WH

SETTING OF SERVICE TOOLS AND EQUIPMENT

Discharging Refrigerant

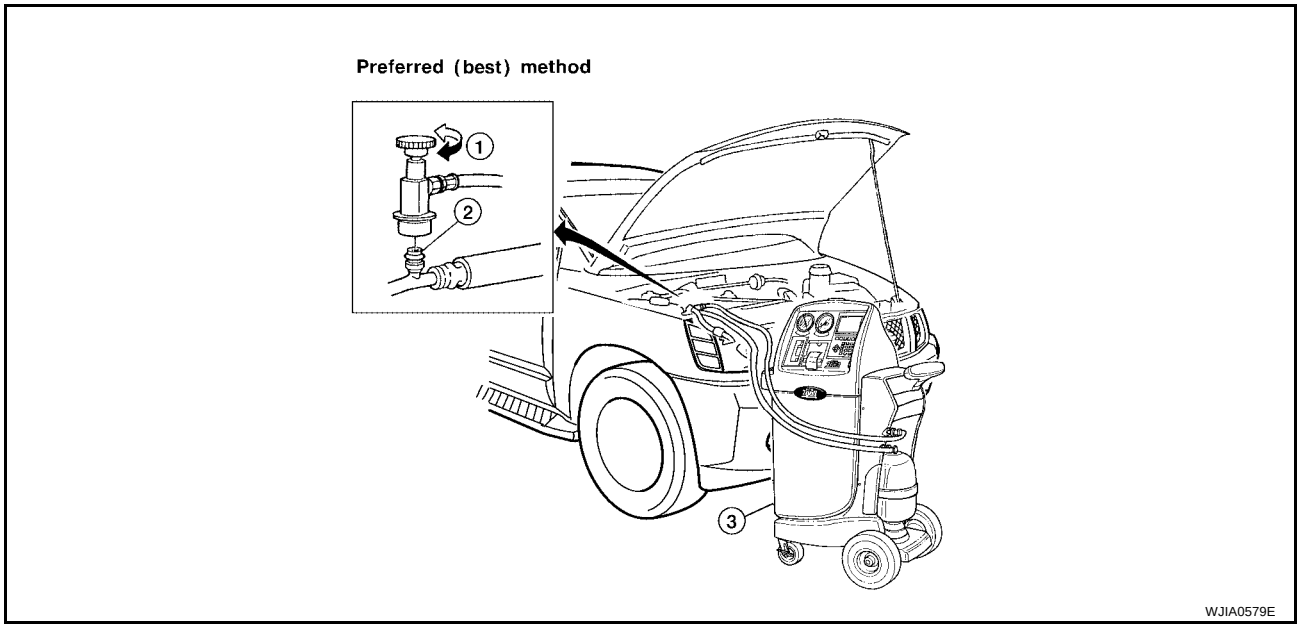

1. Shut-off valve
2. A/C service valve
3. Recovery/recycling equipment

WARNING:

Avoid breathing A/C refrigerant and lubricant vapor or mist. Exposure may irritate eyes, nose and throat. Remove HFC-134a (R-134a) refrigerant from the A/C system using certified service equipment meeting requirements of SAE J2210 HFC-134a (R-134a) recycling equipment or SAE J2201 HFC-134a (R-134a) recovery equipment. If an accidental system discharge occurs, ventilate the work area before resuming service. Additional health and safety information may be obtained from the refrigerant and lubricant manufacturers.

Evacuating System and Charging Refrigerant

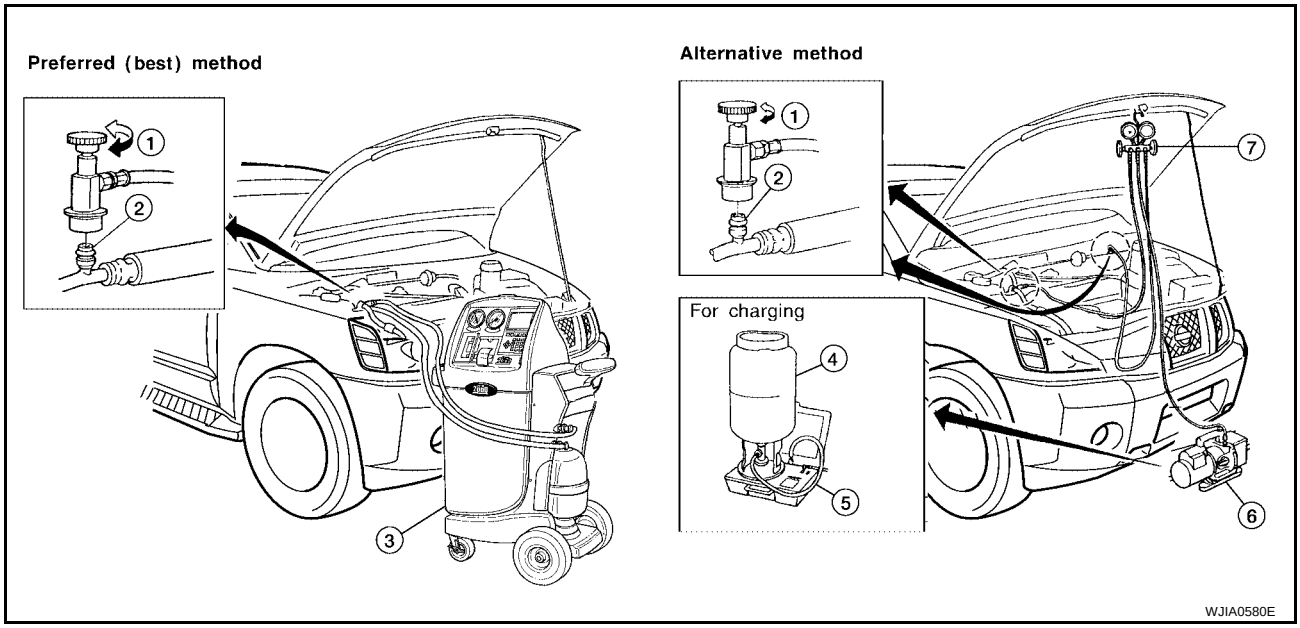

1. Shut-off valve
2. A/C service valve
3. Recovery/recycling equipment
4. Refrigerant container (HFC-134a)
5. Weight scale (J-39650)
6. Evacuating vacuum pump (J-39699)
7. Manifold gauge set (J-39183)

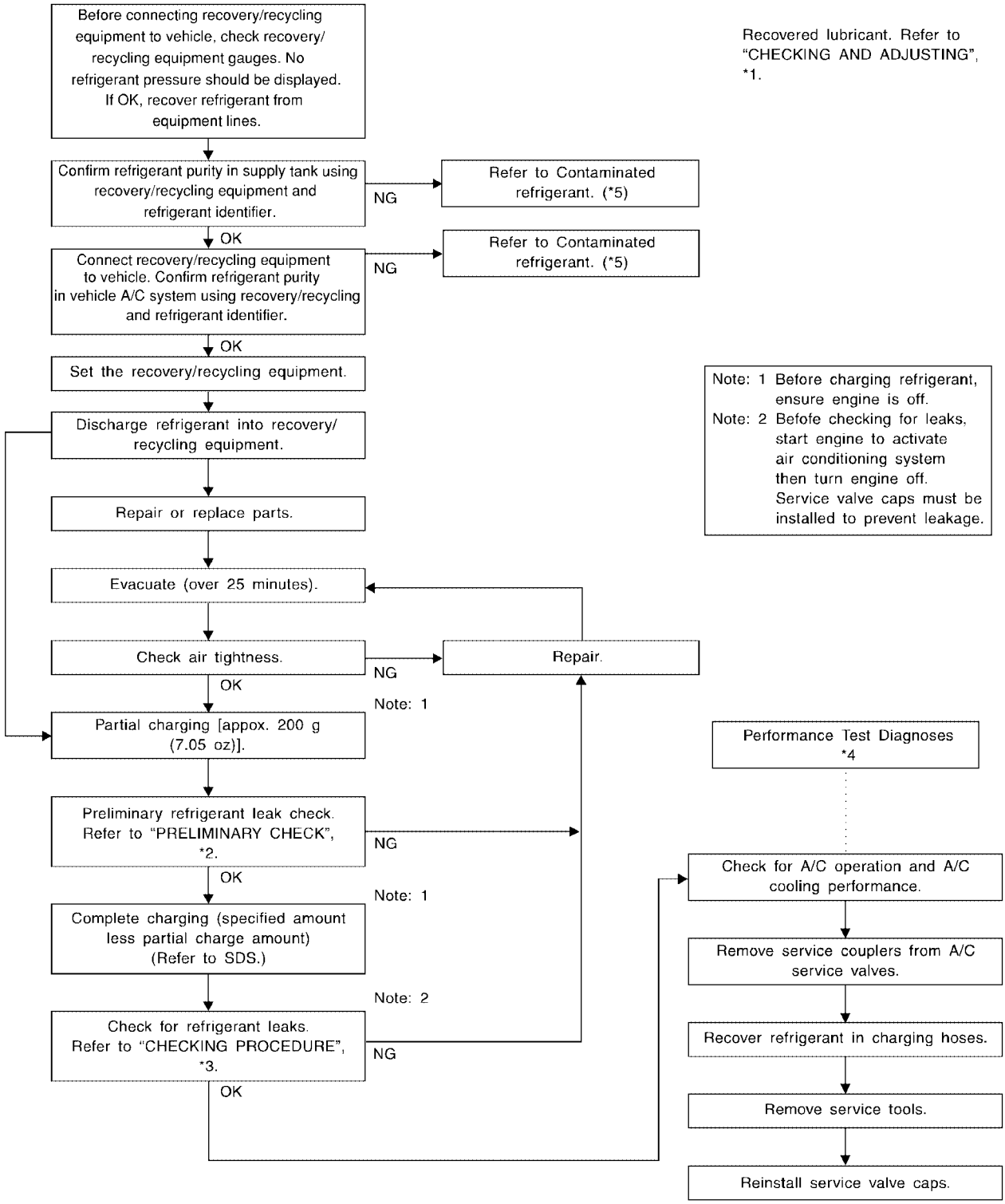

*1 ATC-22, "CHECKING AND ADJUSTING" .

*2 ATC-174, "Checking for Refrigerant Leaks".

*3 ATC-174, "Checking for Refrigerant Leaks".

*4 ATC-109, "PERFORMANCE TEST DIAGNOSES".

*5 ATC-5, "Contaminated Refrigerant".

Components

EJS001WI

Front A/C Compressor and Condenser

SEC. 214 • 271 • 274 • 276

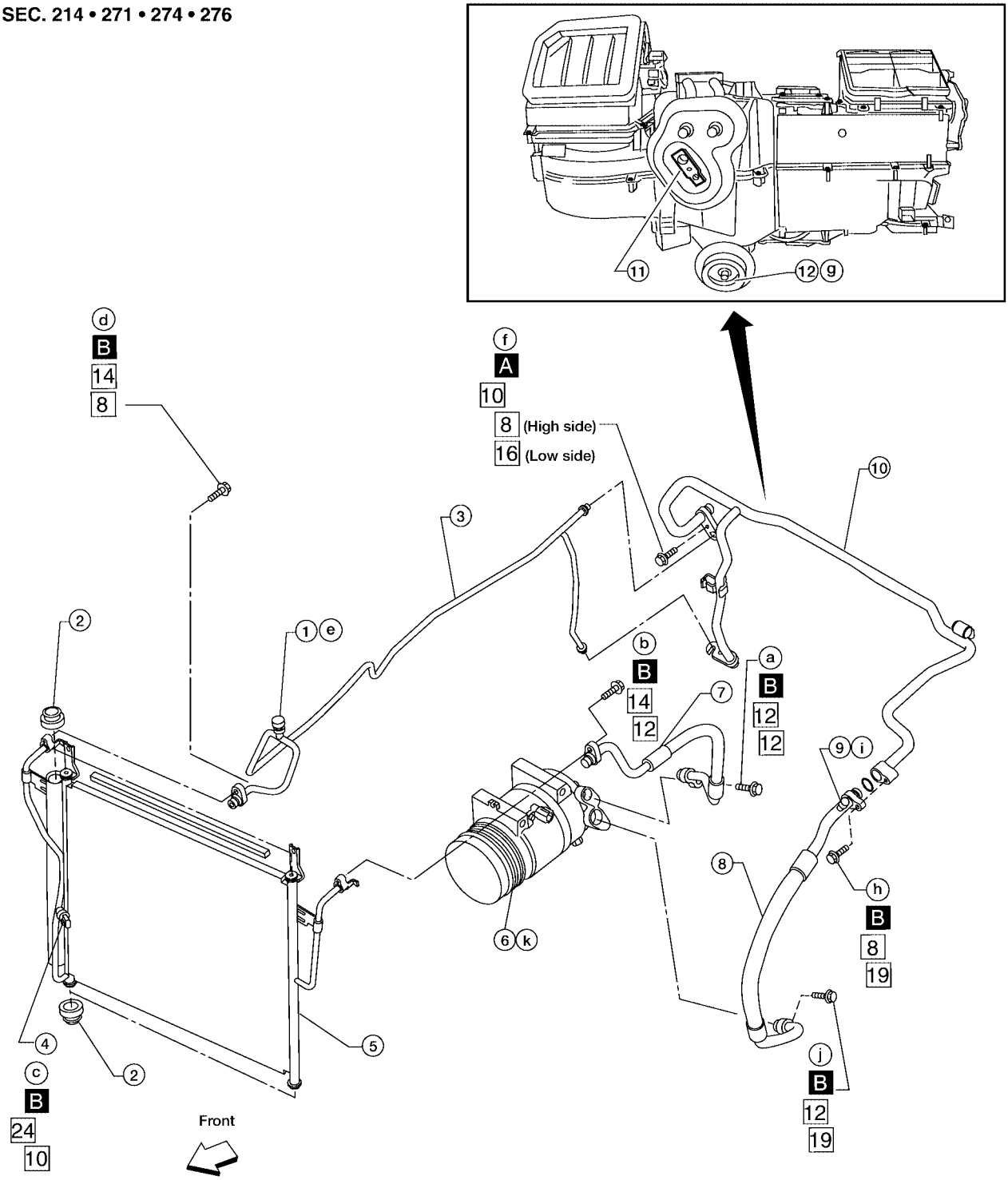

○ : Refrigerant leak checking order (a-k)

□ : Tightening torque

□ □ : Wrench size

□ : O-ring size

: N·m (kg-m, in-lb)

A : 3.4 (0.35 , 30)

B : 9.3 (0.95 , 82)

WJIA1578E

1. High-pressure service valve
2. Grommet
3. High-pressure pipe
4. Refrigerant pressure sensor
5. Condenser
6. Compressor shaft seal
7. High-pressure flexible hose
8. Low-pressure flexible hose
9. Low-pressure service valve
10. Low-pressure pipe
11. Expansion valve (front)
12. Drain hose

Rear A/C

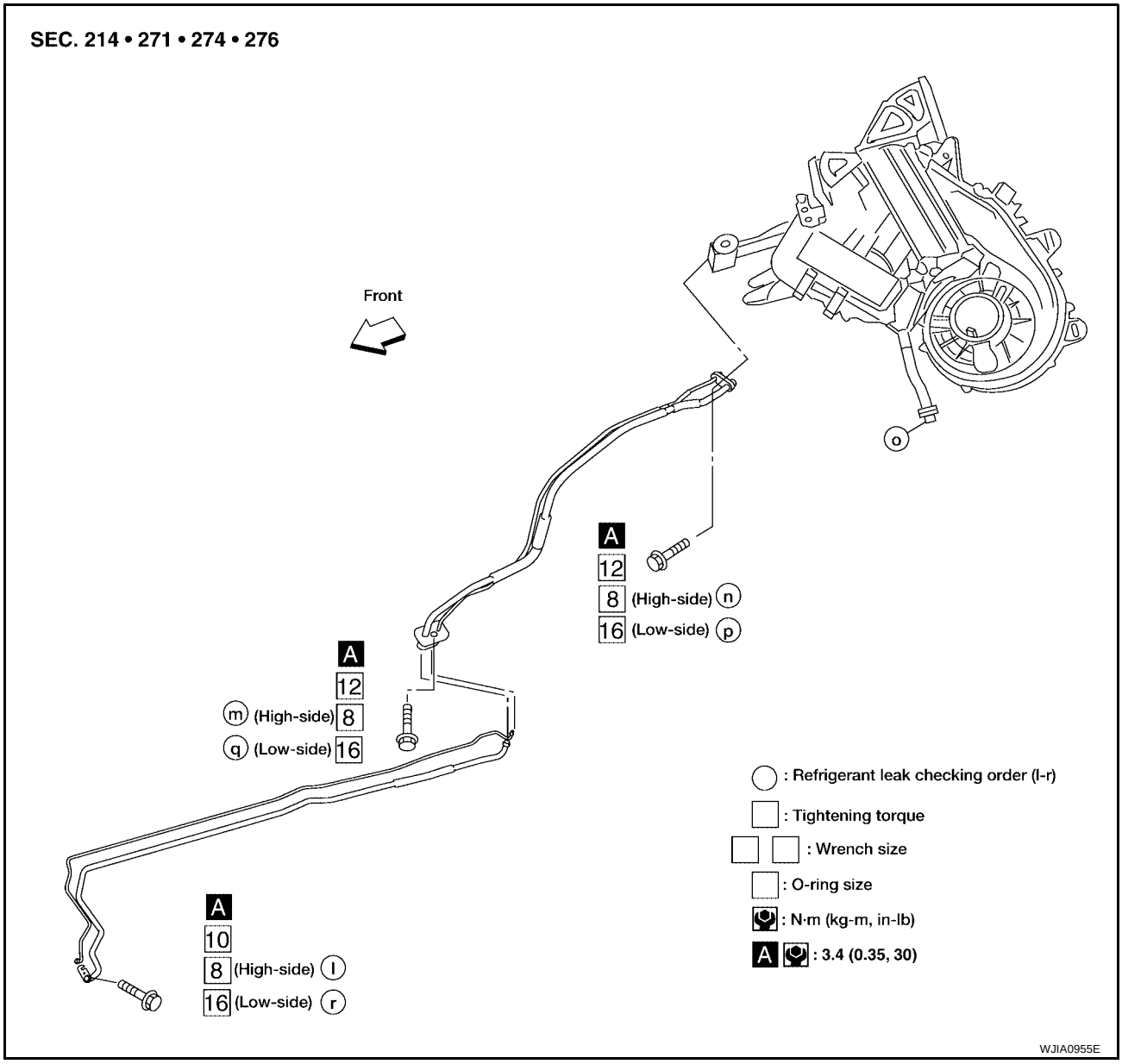

NOTE:
Refer to ATC-7, "Precautions for Refrigerant Connection" .

Removal and Installation for Compressor

EJS001WJ

A/C Compressor Mounting

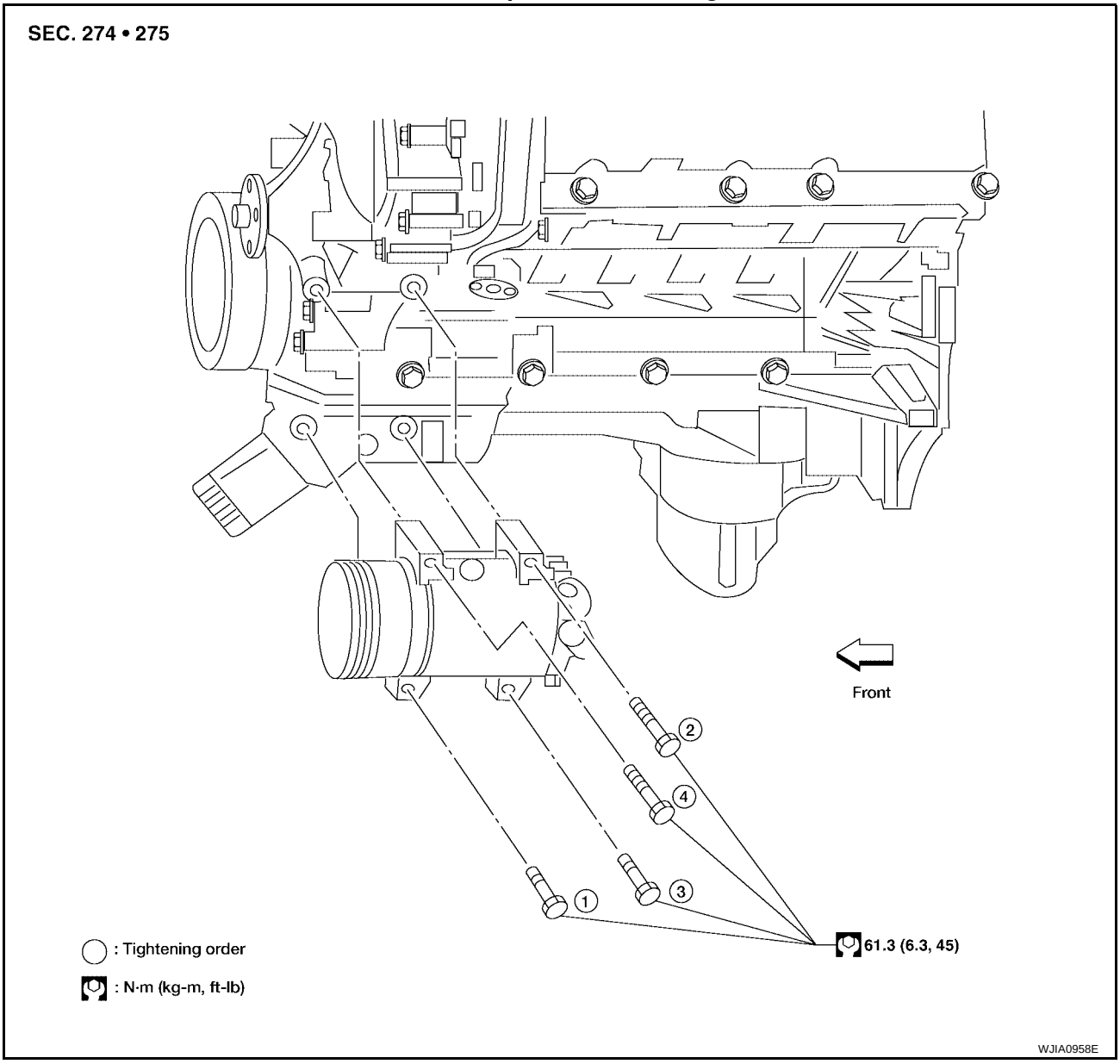

REMOVAL

1. Discharge the refrigerant. Refer to ATC-160, "HFC-134a (R-134a) Service Procedure" .
2. Remove the front right wheel and tire assembly. Refer to WT-6, "Rotation" .
3. Remove the engine under cover and the splash shield using power tool.
4. Remove the engine air cleaner and air ducts. Refer to EM-14, "AIR CLEANER AND AIR DUCT" .
5. Remove the drive belt. Refer to EM-12, "DRIVE BELTS" .
6. Disconnect the compressor electrical connector.
7. Disconnect the high-pressure flexible hose and low-pressure flexible hose from the compressor.

   CAUTION:
   Cap or wrap the joint of the pipe with suitable material such as vinyl tape to avoid the entry of air.
8. Remove the compressor bolts and nut using power tools.

INSTALLATION

Installation is in the reverse order of removal.

CAUTION:

- **Replace the O-ring of the low-pressure flexible hose and high-pressure flexible hose with a new one, apply compressor oil to the O-rings before installation.**
- **After recharging the A/C system with refrigerant, check for leaks.**

Removal and Installation for Compressor Clutch

EJS001WK

Magnet Clutch Assembly

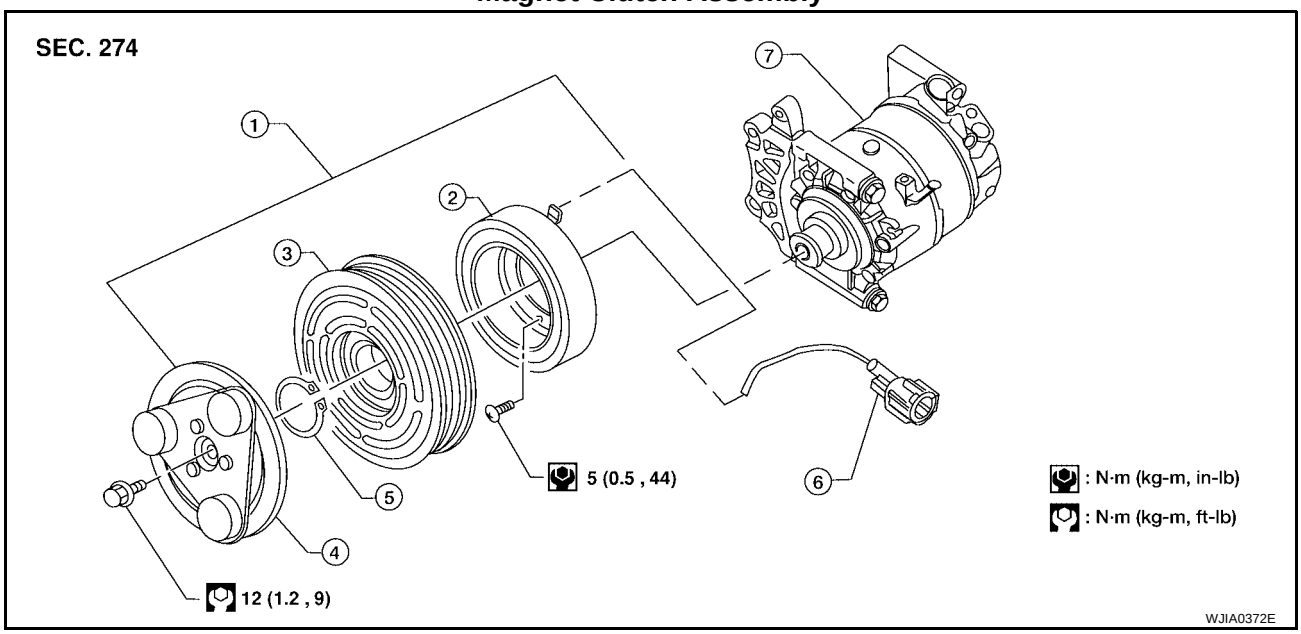

1. Magnet clutch assembly
2. Magnet coil
3. Pulley
4. Clutch disc
5. Snap ring
6. Thermal protector (built in)
7. Compressor

REMOVAL

1. Remove the compressor. Refer to ATC-164, "Removal and Installation for Compressor" .
2. Remove the center bolt while holding the clutch disc stationary using Tool as shown.

   Tool number : J-44614

3. Remove the clutch disc.

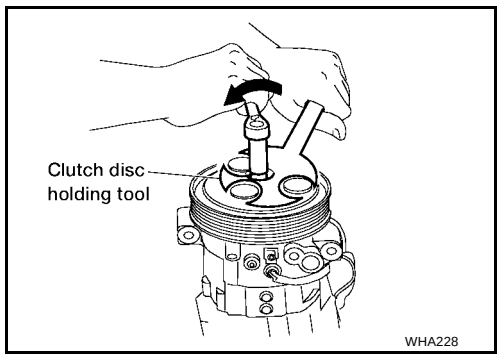

4. Remove the snap ring using external snap ring pliers or suitable tool.

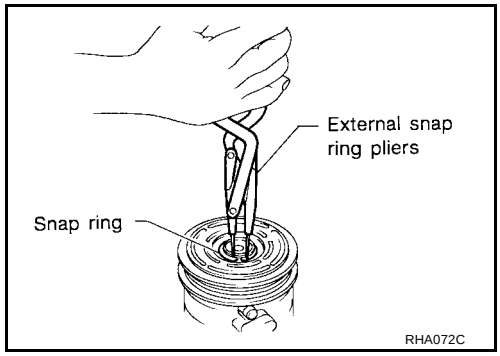

5. Remove the pulley using Tool with a small adapter. Position the small adapter on the end of the drive shaft and the center of the puller on the small adapter.

   CAUTION:
   To prevent deformation of the pulley groove, the puller claws should be hooked under the pulley groove and not into the pulley groove.

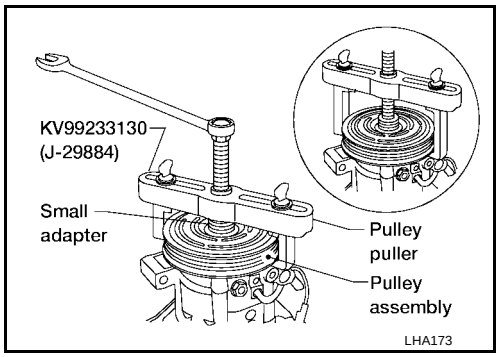

6. Remove the magnet coil harness clip using a screwdriver, remove the three magnet coil fixing screws and remove the magnet coil.

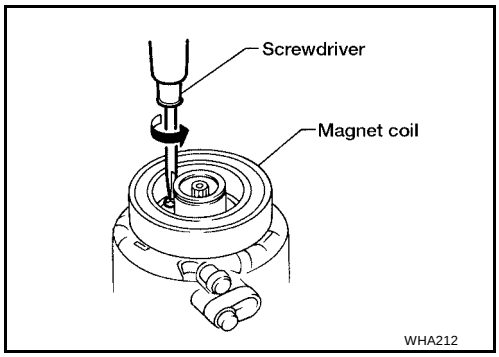

INSPECTION

Clutch Disc

If the contact surface shows signs of damage due to excessive heat, replace clutch disc and pulley.

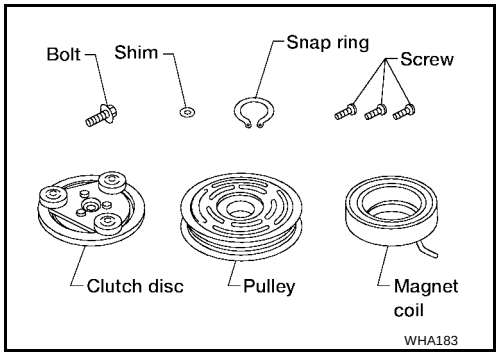

Pulley

Check the appearance of the pulley assembly. If contact surface of pulley shows signs of excessive grooving, replace clutch disc and pulley. The contact surfaces of the pulley assembly should be cleaned with a suitable solvent before reinstallation.

Coil

Check magnet coil for loose connections or any cracked insulation.

INSTALLATION

1. Install the magnet coil.

   CAUTION:
   Be sure to align the magnet coil pin with the hole in the compressor front head.

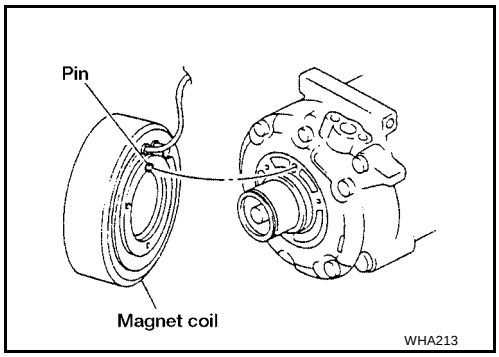

2. Install the magnet coil harness clip using a screwdriver.
3. Install the pulley assembly using Tool and a wrench, then install the snap ring using snap ring pliers.

   Tool number : — (J-38873-A)

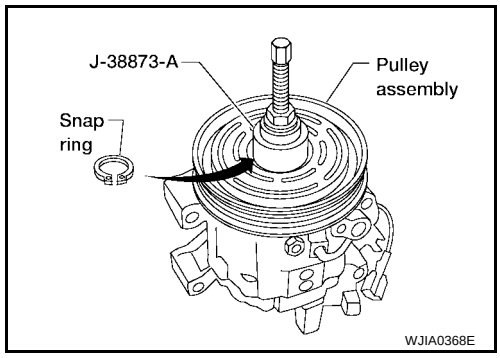

4. Install the clutch disc on the compressor shaft, together with the original shim(s). Press the clutch disc down by hand.

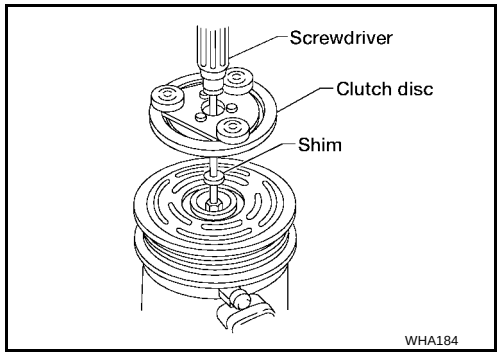

5. Install the clutch pulley bolt using Tool, to prevent the clutch disc from turning and tighten the bolt to specification. Refer to ATC-162, "Components" .

   Tool number : J-44614

   CAUTION:
   After tightening the clutch pulley bolt, check that the clutch pulley rotates smoothly.

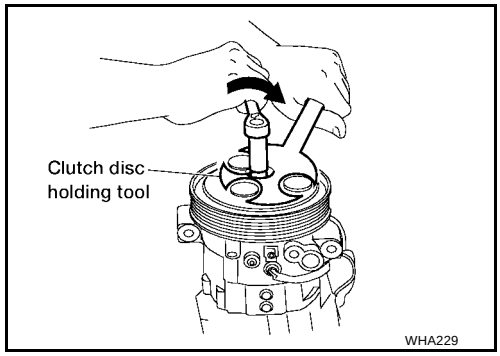

6. Check the pulley clearance all the way around the clutch disc as shown.

   Clutch disc-to-pulley clearance : 0.3 - 0.6 mm (0.012 - 0.024 in)

7. If the specified clearance is not obtained, replace the adjusting spacer to readjust.
8. Connect the compressor electrical connector.
9. Install the drive belt. Refer to EM-12, "DRIVE BELTS" .
10. Install the engine under cover and the splash shield.

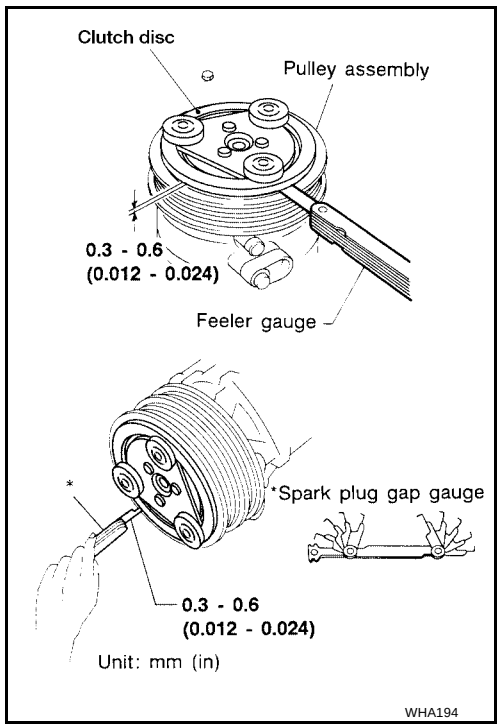

BREAK-IN OPERATION

When replacing compressor clutch assembly, always conduct the break-in operation. This is done by engaging and disengaging the clutch about 30 times. Break-in operation raises the level of transmitted torque.

Removal and Installation for Low-pressure Flexible Hose

EJS001WL

REMOVAL

1. Remove the engine room cover using power tools.
2. Remove the engine air cleaner and air ducts. Refer to EM-14, "AIR CLEANER AND AIR DUCT"
3. Remove the cowl top extension. Refer to EI-18, "COWL TOP" .
4. Discharge the refrigerant. Refer to ATC-160, "HFC-134a (R-134a) Service Procedure" .

   CAUTION:
   Cap or wrap the joint of the pipe with suitable material such as vinyl tape to avoid the entry of air.
5. Remove the low-pressure flexible hose. Refer to ATC-162, "Components" .

INSTALLATION

Installation is in the reverse order of removal.
Refer to ATC-162, "Components" .

CAUTION:

- **Replace the O-ring of the low-pressure flexible hose with a new one, then apply compressor oil to it when installing it.**
- **After charging refrigerant, check for leaks.**

Removal and Installation for High-pressure Flexible Hose

EJS001WM

REMOVAL

1. Remove the engine under cover.
2. Remove the engine air cleaner and air ducts. Refer to EM-14, "AIR CLEANER AND AIR DUCT" .
3. Discharge the refrigerant. Refer to ATC-160, "HFC-134a (R-134a) Service Procedure" .
4. Remove the high-pressure flexible hose. Refer to ATC-162, "Components" .

   CAUTION:
   Cap or wrap the joint of the pipe with suitable material such as vinyl tape to avoid the entry of air.

INSTALLATION

Installation is in the reverse order of removal.
Refer to ATC-162, "Components" .

CAUTION:

- **Replace the O-ring of the high-pressure flexible hose with a new one, then apply compressor oil to it when installing it.**
- **After charging refrigerant, check for leaks.**

Removal and Installation for High-pressure Pipe

EJS001WN

REMOVAL

1. Remove the cowl top extension. Refer to EI-18, "COWL TOP" .
2. Disconnect the battery negative cable.
3. Reposition the IPDM E/R aside.
4. Remove the front right wheel and tire assembly. Refer to WT-6, "Rotation" .
5. Position aside the front floor insulator.
6. Discharge the refrigerant. Refer to ATC-160, "HFC-134a (R-134a) Service Procedure" .
7. Remove the low pressure pipe. Refer to ATC-169, "Removal and Installation for Low-pressure Pipe" .
8. Remove the high-pressure pipe. Refer to ATC-162, "Components" .

   CAUTION:
   Cap or wrap the joint of the pipe with suitable material such as vinyl tape to avoid the entry of air.

INSTALLATION

Installation is in the reverse order of removal.
Refer to ATC-162, "Components" .

CAUTION:
- **Replace the O-ring of the high-pressure pipe with a new one, then apply compressor oil to it when installing it.**
- **After charging refrigerant, check for leaks.**

Removal and Installation for Low-pressure Pipe

EJS001WO

REMOVAL

1. Discharge the refrigerant. Refer to ATC-160, "HFC-134a (R-134a) Service Procedure" .
2. Remove the cowl top and the cowl top extension. Refer to EI-18, "COWL TOP" .
3. Remove the low-pressure pipe. Refer to ATC-162, "Components" .

   CAUTION:
   Cap or wrap the joint of the pipes with suitable material such as vinyl tape to avoid the entry of air.

INSTALLATION

Installation is in the reverse order of removal.
Refer to ATC-162, "Components" .

CAUTION:
- **Replace the O-ring of the high/low-pressure pipe with a new one, then apply compressor oil to it when installing it.**
- **After charging refrigerant, check for leaks.**

Removal and Installation for Refrigerant Pressure Sensor

EJS001WP

REMOVAL

1. Discharge the refrigerant. Refer to ATC-160, "HFC-134a (R-134a) Service Procedure" .
2. Disconnect the refrigerant pressure sensor electrical connector and remove the refrigerant pressure sensor from the condenser.

   CAUTION:
   Be careful not to damage the condenser fins.

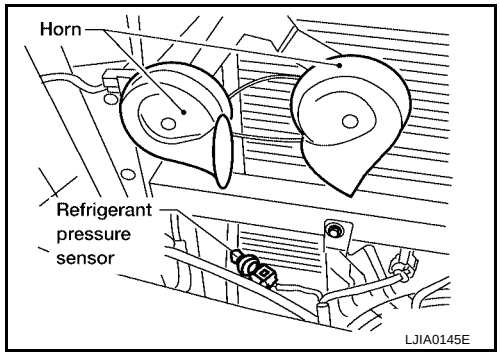

INSTALLATION

Installation is in the reverse order of removal.
Refer to ATC-162, "Components" .

CAUTION:
- **Be careful not to damage the condenser fins.**
- **Apply compressor oil to the O-ring of the refrigerant pressure sensor when installing it.**
- **After charging refrigerant, check for leaks.**

Removal and Installation for Condenser

EJS001WQ

REMOVAL

1. Discharge the refrigerant. Refer to ATC-160, "HFC-134a (R-134a) Service Procedure" .
2. Remove the radiator. Refer to CO-10, "RADIATOR" .

   CAUTION:
   Be careful not to damage the core surface of the condenser and the radiator.
3. Disconnect the high-pressure flexible hose and the high-pressure pipe from the condenser.

   CAUTION:
   Cap or wrap the joint of the pipe with suitable material such as vinyl tape to avoid the entry of air.

4. Disconnect the refrigerant pressure sensor connector.
   - Remove the refrigerant pressure sensor from the condenser as necessary.
5. Lift the condenser out of the mounting grommets to remove the condenser.

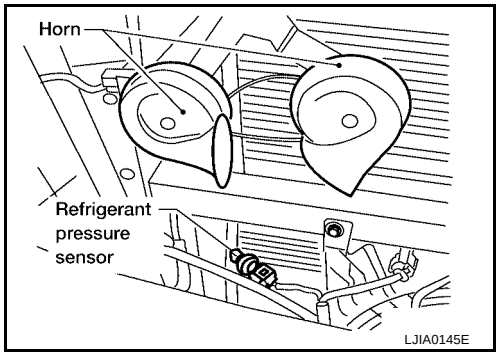

INSTALLATION

Installation is in the reverse order of removal.
Refer to ATC-162, "Components" .

CAUTION:

- **Replace the O-rings of the high-pressure pipe and the high-pressure flexible hose with new ones, then apply compressor oil to them after installing them.**
- **After charging refrigerant, check for leaks.**
- **Replace the grommets as necessary.**

Removal and Installation for Front Evaporator

EJS001WR

Front Heater and Cooling Unit Assembly

SEC. 271

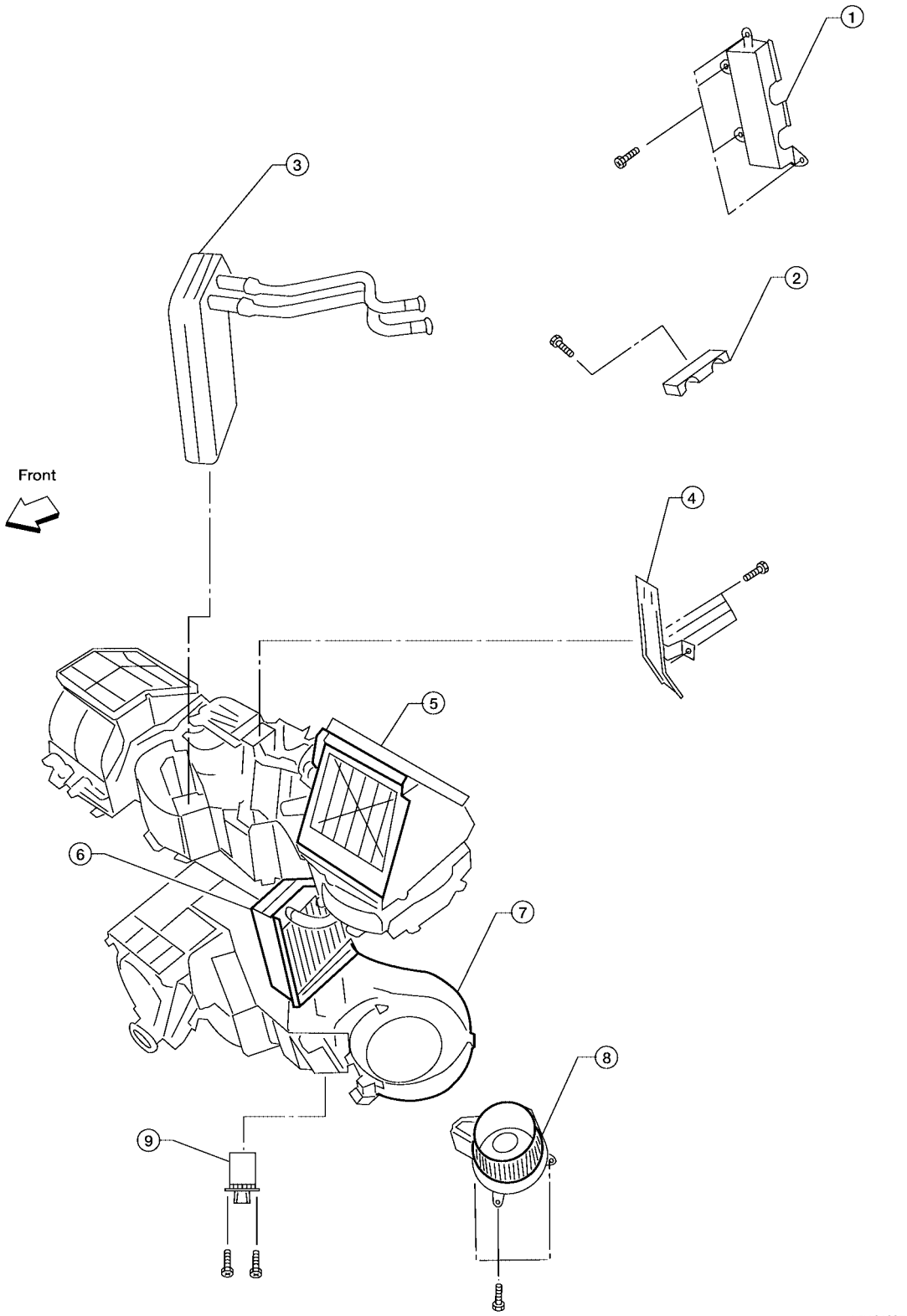

1.	Heater core cover	2.	Heater core pipe bracket	3.	Heater core
4.	Upper bracket	5.	Upper heater and cooling unit case	6.	A/C evaporator
7.	Lower heater and cooling unit case	8.	Blower motor	9.	Variable blower control

REMOVAL

1. Remove the front heater core. Refer to ATC-146, "FRONT HEATER CORE" .

2. Remove the defroster mode door arm.
3. Separate the heater core and cooling unit case.
4. Remove the evaporator.

INSTALLATION

Installation is in the reverse order of removal.

CAUTION:

Replace the O-rings on the low-pressure flexible hose and the high-pressure pipe with new ones. Apply compressor oil to the O-rings before installing them.

Removal and Installation for Rear Evaporator

EJS001WS

Rear Heater and Cooling Unit Assembly

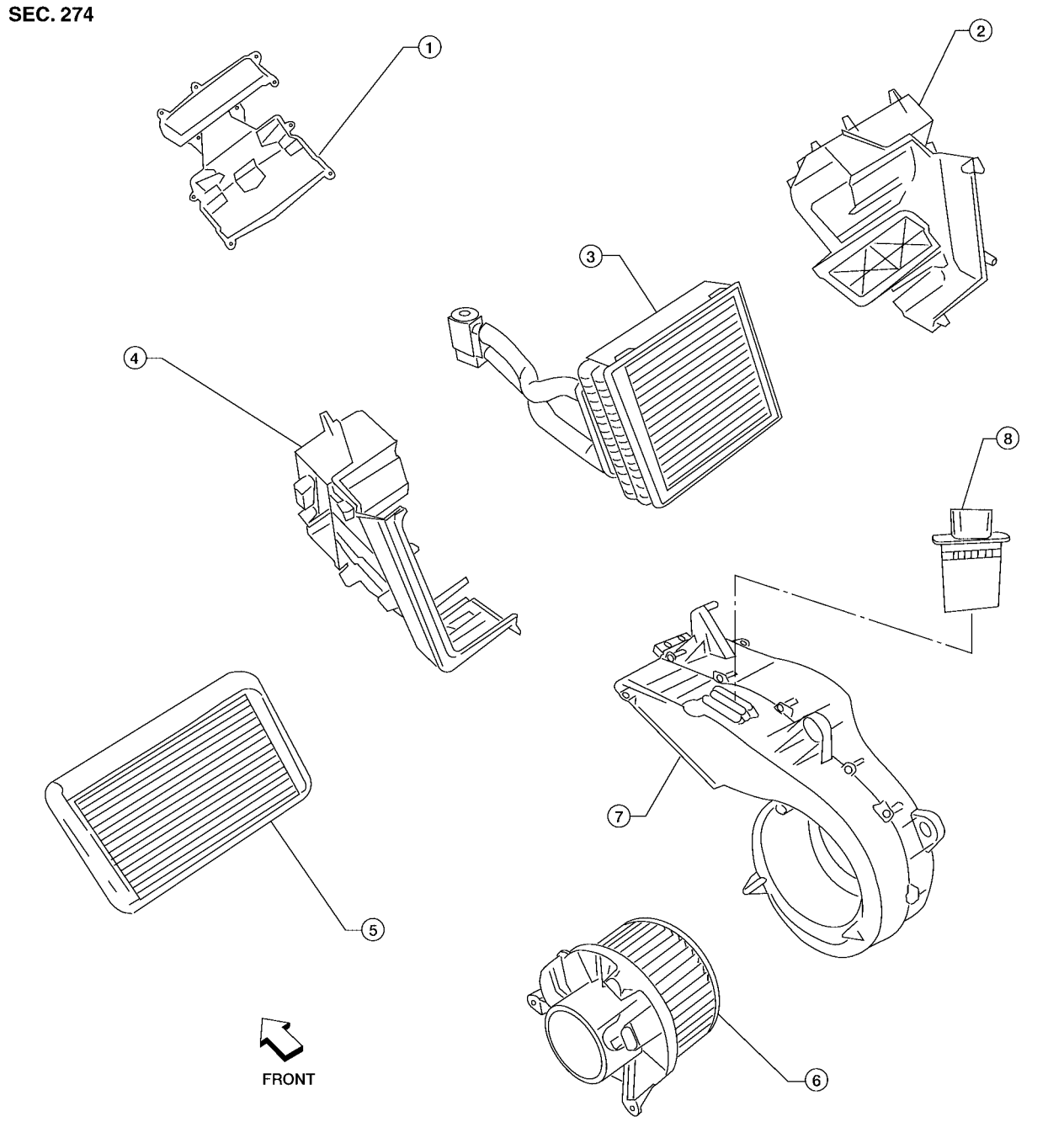

LJIA0135E

1. Front cover
2. Evaporator and heater core case
3. Evaporator
4. Side cover
5. Heater core
6. Rear blower motor
7. Blower motor case
8. Rear blower motor resistor

REMOVAL

1. Remove the rear heater and cooling unit assembly from the vehicle. Refer to ATC-144, "REAR HEATER AND COOLING UNIT ASSEMBLY" .
2. Remove the rear blower motor.
3. Remove the rear blower speed resistor.
4. Remove the rear air mix door motor.
5. Remove the rear duct and blend door assembly. Refer to ATC-158, "DEFROSTER NOZZLE" .
6. Disassemble the rear heater and cooling unit assembly to remove the evaporator.

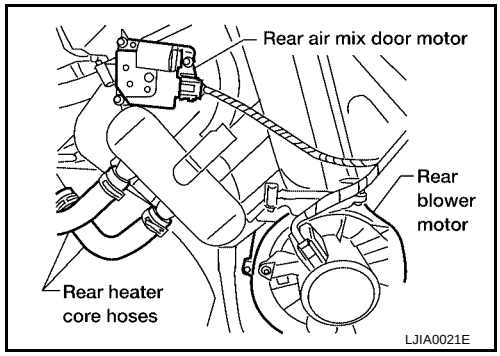

INSTALLATION

Installation is in the reverse order of removal.

CAUTION:

- **Replace the O-rings on the rear A/C pipes with new ones. Apply compressor oil to the O-rings before installing them.**
- **After charging refrigerant, check for leaks.**

Removal and Installation for Front Expansion Valve

EJS001WT

REMOVAL

1. Discharge the refrigerant. Refer to ATC-160, "HFC-134a (R-134a) Service Procedure" .
2. Remove the front heater and cooling unit assembly. Refer to ATC-143, "FRONT HEATER AND COOLING UNIT ASSEMBLY" .
3. Remove the cooler grommet.
4. Remove the expansion valve.

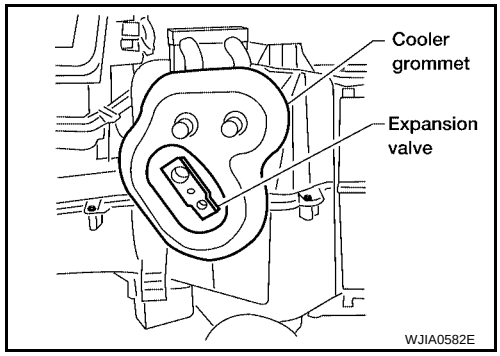

INSTALLATION

Installation is in the reverse order of removal.

Expansion valve bolts	**: 4 N·m (0.41 kg-m, 35 in-lb)**
A/C refrigerant pipe to expansion valve bolt	**: Refer to ATC-162, "Components" .**

CAUTION:

- **Replace the O-rings on the A/C refrigerant pipes with new ones, then apply compressor oil to them when installing them.**
- **After charging refrigerant, check for leaks.**

Removal and Installation for Rear Expansion Valve

EJS001WU

REMOVAL

1. Discharge the refrigerant. Refer to ATC-160, "HFC-134a (R-134a) Service Procedure" .
2. Remove the rear RH interior side trim panel. Refer to EI-30, "Removal and Installation" .
3. Disconnect the A/C refrigerant pipes from the expansion valve.

CAUTION:
Cap or wrap the A/C refrigerant pipe ends with a suitable material such as vinyl tape to avoid the entry of air and contaminants.

4. Remove the expansion valve.

INSTALLATION

Installation is in the reverse order of removal.

Expansion valve bolts	**: 4 N·m (0.41 kg-m, 35 in-lb)**
A/C refrigerant pipe to expansion valve bolt	**: Refer to ATC-162, "Components"**

CAUTION:
- **Replace the O-rings on the A/C refrigerant pipes with new ones, then apply compressor oil to them when installing them.**
- **After charging refrigerant, check for leaks.**

Checking for Refrigerant Leaks

EJS001WV

Perform a visual inspection of all refrigeration parts, fittings, hoses and components for signs of A/C lubricant leakage, damage, and corrosion. Any A/C lubricant leakage may indicate an area of refrigerant leakage. Allow extra inspection time in these areas when using either an electronic refrigerant leak detector (J-41995) or fluorescent dye leak detector (J-42220).
If any dye is observed using a fluorescent dye leak detector (J-42220), confirm the leak using a electronic refrigerant leak detector (J-41995). It is possible that the dye is from a prior leak that was repaired and not properly cleaned.
When searching for leaks, do not stop when one leak is found but continue to check for additional leaks at all system components and connections.
When searching for refrigerant leaks using an electronic refrigerant leak detector (J-41995), move the probe along the suspected leak area at 25 - 50 mm (1 - 2 in) per second and no further than 6 mm (1/4 in) from the component.

CAUTION:
Moving the electronic refrigerant leak detector probe slower and closer to the suspected leak area will improve the chances of finding a leak.

Checking System for Leaks Using the Fluorescent Dye Leak Detector

EJS001WW

1. Check the A/C system for leaks using the fluorescent dye leak detector (and safety goggles) (J-42220) in a low sunlight area (area without windows preferable). Illuminate all components, fittings and lines. The dye will appear as a bright green/yellow area at the point of leakage. Fluorescent dye observed at the evaporator drain opening indicates an evaporator core assembly leak (tubes, core or expansion valve).
2. If the suspected area is difficult to see, use an adjustable mirror or wipe the area with a clean shop rag or cloth, then inspect the shop rag or cloth with the fluorescent dye leak detector (J-42220) for dye residue.
3. After the leak is repaired, remove any residual dye using dye cleaner (J-43872) to prevent future misdiagnosis.
4. Perform a system performance check and then verify the leak repair using a electronic refrigerant leak detector (J-41995).

   NOTE:
   - Other gases in the work area or substances on the A/C components, for example, anti-freeze, windshield washer fluid, solvents and lubricants, may falsely trigger the leak detector. Make sure the surfaces to be checked are clean.
   - Clean with a dry cloth or blow off with shop air.
   - Do not allow the sensor tip of the electronic refrigerant leak detector (J-41995) to contact with any substance. This can also cause false readings and may damage the detector.

Dye Injection

EJS001WX

NOTE:
This procedure is only necessary when recharging the system or when the compressor has seized and must be replaced.

1. Check the A/C system static (at rest) pressure. Pressure must be at least 345 kPa (3.52 kg/cm^2 , 50 psi).

2. Pour one bottle 7.4 cc (1/4 ounce) of the HFC-134a (R-134a) fluorescent leak detection dye (J-41447) into the HFC-134a (R-134a) dye injector (J-41459).

   CAUTION:
   If repairing the A/C system or replacing a component, pour the HFC-134a (R-134a) fluorescent leak detection dye (J-41447) directly into the open system connection and proceed with the service procedures.
3. Connect the injector tool (J-41459) to the low-pressure service valve.
4. Start the engine and switch the A/C system ON.
5. When the A/C system is operating (compressor running), inject one bottle 7.4 cc (1/4 ounce) of HFC-134a (R-134a) fluorescent leak detection dye (J-41447) through the low-pressure service valve using HFC-134a (R-134a) dye injector (J-41459). Refer to the manufacturer's operating instructions.
6. With the engine still running, disconnect the HFC-134a (R-134a) dye injector (J-41459) from the low-pressure service valve.
7. Operate the A/C system for a minimum of 20 minutes to mix the HFC-134a (R-134a) fluorescent leak detection dye (J-41447) with the A/C system oil. Depending on the leak size, operating conditions and location of the leak, it may take from minutes to days for the HFC-134a (R-134a) fluorescent leak detection dye to penetrate an A/C system leak and become visible.

Electronic Refrigerant Leak Detector

EJS001WY

PRECAUTIONS FOR HANDLING LEAK DETECTOR

NOTE:
When performing a refrigerant leak check, use a electronic refrigerant leak detector (J-41995) or equivalent. Ensure that the electronic refrigerant leak detector (J-41995) is calibrated and set properly according to the manufacturer's operating instructions.

The electronic refrigerant leak detector (J-41995) is a delicate device. To use the leak detector properly, read the manufacturer's operating instructions and perform any specified maintenance.

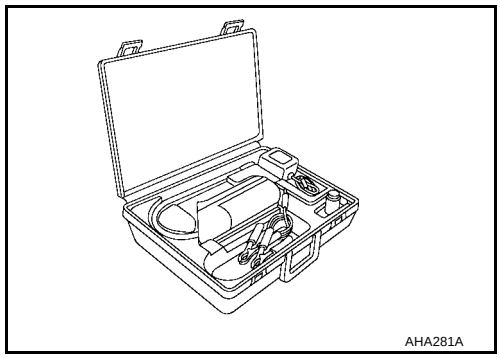

1. Position the probe approximately 5 mm (3/16 in) away from the point to be checked as shown.

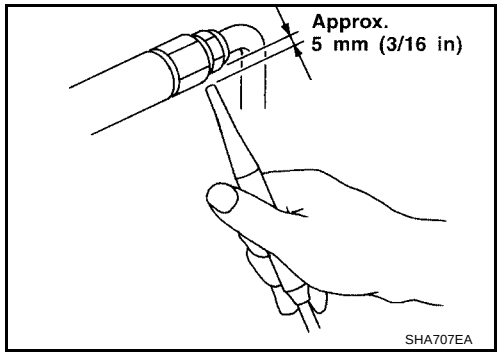

2. When checking for leaks, circle each fitting completely with the probe as shown.

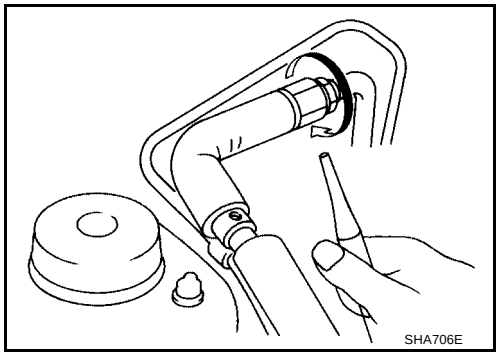

3. Move the probe along each component at a speed of approximately 25 - 50 mm (1 - 2 in)/second as shown.

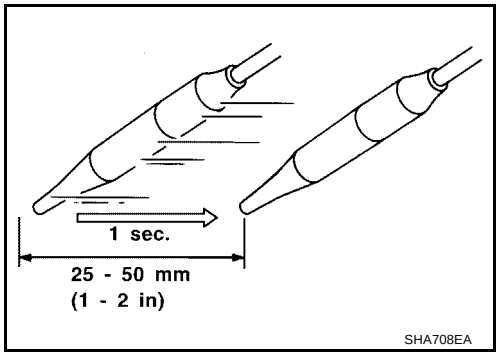

CHECKING PROCEDURE

NOTE:
To prevent inaccurate or false readings, make sure there is no refrigerant vapor, shop chemicals, or cigarette smoke in the vicinity of the vehicle. Perform the leak test in a calm area (low air/wind movement) so that the leaking refrigerant is not dispersed.

1. Turn the engine OFF.
2. Connect the manifold gauge set (J-39183-C) to the A/C service ports. Refer to ATC-160, "SETTING OF SERVICE TOOLS AND EQUIPMENT" .
3. Check if the A/C refrigerant pressure is at least 345 kPa (3.52 kg/cm^2 , 50 psi) above a temperature of 16°C (61°F). If less than specification, recover/evacuate and recharge the system with the specified amount of refrigerant. Refer to ATC-160, "HFC-134a (R-134a) Service Procedure" .

   NOTE:
   At temperatures below 16°C (61°F), leaks may not be detected since the system may not reach 345 kPa (3.52 kg/cm^2 , 50 psi) pressure.
4. Perform the leak test from the high-pressure side (front A/C compressor discharge “a” to evaporator inlet “f” or rear piping connection “l”) to the low-pressure side (front A/C evaporator drain hose “g” to shaft seal “k” and rear A/C evaporator drain hose “o” to piping connection “r”). Refer to ATC-162, "Components" . Clean the component to be checked and carefully move the electronic refrigerant leak detector probe completely around the following connections and components.
   - Check the compressor shaft seal
   - Check the high and low-pressure pipe and hose fittings, relief valve, and compressor shaft seal
   - Check the liquid tank
   - Check the refrigerant pressure sensor
   - Check all around the service valves. Check that the service valve caps are screwed tightly on the service valves (to prevent leaks).

     NOTE:
     After removing manifold gauge set (J-39183-C) from the service valves, wipe any residue from the service valves to prevent any false readings by the electronic refrigerant leak detector (J-41995).
   - Evaporator
     With engine OFF, turn blower fan on “High” for at least 15 seconds to dissipate any refrigerant trace in the heater and cooling unit assembly. Wait a minimum of 10 minutes accumulation time (refer to the manufacturer's recommended procedure for actual wait time) before inserting the electronic refrigerant leak detector probe into the heater and cooling unit assembly drain hose.

NOTE:
Keep the probe inserted for at least 10 seconds. Use caution not to contaminate the probe tip with water or dirt that may be in the drain hose.

5. If a leak is detected, verify at least once by blowing compressed air into the area of the suspected leak, then repeat the leak check.
6. Do not stop when one leak is found. Continue to check for additional leaks at all system components and connections.
7. If no leaks are found, perform steps 8 - 11.
8. Start the engine.
9. Set the heater A/C controls as follows:

NOTE:
For the automatic system, turn OFF the automatic controls and set the heater A/C controls manually.

a. A/C switch to ON
b. Air flow to VENT mode
c. Intake position to RECIRCULATION mode
d. Temperature to MAX cold
e. Blower speed to HIGH

10. Run the engine at 1,500 rpm for at least 2 minutes.
11. Turn the engine OFF and perform the leak check again following steps 4 through 6 above.
Refrigerant leaks should be checked immediately after turning the engine OFF. Begin with the leak detector at the compressor. The pressure on the high pressure side will gradually drop after the refrigerant circulation stops and pressure on the low pressure side will gradually rise, as shown in the graph. Some leaks are more easily detected when the pressure is high.

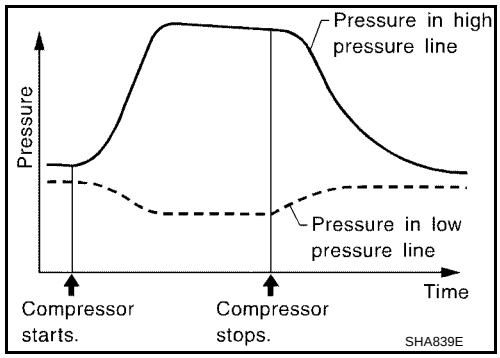

12. Before connecting the recovery/recycling equipment to the vehicle, check the recovery/recycling equipment gauges. No refrigerant pressure should be displayed. If pressure is displayed, recover the refrigerant from the equipment lines and then check the refrigerant purity.
13. Confirm refrigerant purity in supply tank using recovery/recycling equipment and refrigerant identifier equipment (J-41810-NI).
14. Confirm the refrigerant purity in the vehicle's A/C system using recovery/recycling equipment and refrigerant identifier equipment (J-41810-NI).
15. Discharge the A/C system using recovery/recycling equipment. Repair the leaking fitting or component as necessary.
16. Evacuate and recharge the A/C system and perform the leak test to confirm that there are no refrigerant leaks.
17. Conduct the Operational Check to ensure system works properly. Refer to ATC-55, "Operational Check (Front)" .

SERVICE DATA AND SPECIFICATIONS (SDS)

PFP:00030

Service Data and Specifications (SDS)

EJS001WZ

COMPRESSOR

Make	ZEXEL VALEO CLIMATE CONTROL
Model	DKS-17D
Type	Swash plate
Displacement	175.5 cm^3 (10.7 in^3) / revolution
Cylinder bore × stroke	30.5 mm (1.20 in) x 24.0 mm (0.94 in)
Direction of rotation	Clockwise (viewed from drive end)
Drive belt	Poly V

LUBRICANT

Name	NISSAN A/C System Lubricant Type S (DH-PS)
Part number	KLH00-PAGS0
Capacity	290 m ℓ (9.8 US fl oz, 10.2 Imp fl oz)

REFRIGERANT

Type	HFC 134a (R-134a)
Capacity	1.08 ± 0.05 kg (2.38 ± 0.11 lb)

ENGINE IDLING SPEED

Refer to EC-31, "Idle Speed and Ignition Timing Check" .

BELT TENSION

Refer to MA-13, "DRIVE BELT TENSION" .