Edition: September 2003
Revision: January 2005
Publication No. SM4E-1T60U2

NISSAN PATHFINDER ARMADA
MODEL TA60 SERIES

QUICK REFERENCE INDEX

FOREWORD

This manual contains maintenance and repair procedures for the 2004 NISSAN PATHFINDER ARMADA.

In order to assure your safety and the efficient functioning of the vehicle, this manual should be read thoroughly. It is especially important that the PRECAUTIONS in the GI section be completely understood before starting any repair task.

All information in this manual is based on the latest product information at the time of publication. The right is reserved to make changes in specifications and methods at any time without notice.

IMPORTANT SAFETY NOTICE

The proper performance of service is essential for both the safety of the technician and the efficient functioning of the vehicle.
The service methods in this Service Manual are described in such a manner that the service may be performed safely and accurately.
Service varies with the procedures used, the skills of the technician and the tools and parts available. Accordingly, anyone using service procedures, tools or parts which are not specifically recommended by NISSAN must first be completely satisfied that neither personal safety nor the vehicle's safety will be jeopardized by the service method selected.

NISSAN NORTH AMERICA, INC.
Technical Publications Department
Gardena, California

PLEASE HELP MAKE THIS SERVICE MANUAL BETTER!

Your comments are important to NISSAN and will help us to improve our Service Manuals.

Use this form to report any issues or comments you may have regarding our Service Manuals.

Please print this form and type or write your comments below. Mail or fax to:

Nissan North America, Inc.
Technical Service Information
39001 Sunrise Drive, P.O. Box 9200
Farmington Hills, MI USA 48331
FAX: (248) 488-3910

SERVICE MANUAL: Model: _____ **Year:** _____

PUBLICATION NO. (Refer to Quick Reference Index): _____

Please describe any Service Manual issues or problems in detail:

Page number(s) _____ *Note: Please include a copy of each page, marked with your comments.*

_____

_____

_____

_____

_____

_____

_____

Are the trouble diagnosis procedures logical and easy to use? (circle your answer) YES NO

If no, what page number(s)?_____*Note: Please include a copy of each page, marked with your comments.*

Please describe the issue or problem in detail: _____

_____

_____

_____

Is the organization of the manual clear and easy to follow? (circle your answer) YES NO

Please comment: _____

_____

_____

_____

_____

What information should be included in NISSAN Service Manuals to better support you in servicing or repairing customer vehicles?

_____

_____

_____

_____

DATE: _____ YOUR NAME: _____ POSITION: _____

DEALER: _____ DEALER NO.: _____ ADDRESS: _____

CITY:_____ STATE/PROV./COUNTRY: _____ ZIP/POSTAL CODE: _____

QUICK REFERENCE CHART PATHFINDER ARMADA

PFP:00000

Engine Tune-Up Data

ELS000YK

Engine Specifications

Cylinder arrangement		V-8
Displacement		5,552 cm^3 (338.80 in^3)
Bore and stroke		98 x 92 mm (3.86 x 3.62 in)
Valve arrangement		DOHC
Firing order		1-8-7-3-6-5-4-2
Number of piston rings	Compression	2
	Oil	1
Number of main bearings		5
Compression ratio		9.8:1
Compression pressure	Standard	1,520 kPa (15.5 kg/cm^2 , 220 psi) / 200 rpm
	Minimum	1,324 kPa (13.5 kg/cm^2 , 192 psi) / 200 rpm
	Differential limit between cylinders	98 kPa (1.0 kg/cm^2 , 14 psi) / 300 rpm
Cylinder number	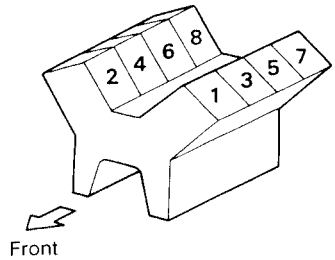 SEM957C	
Valve timing	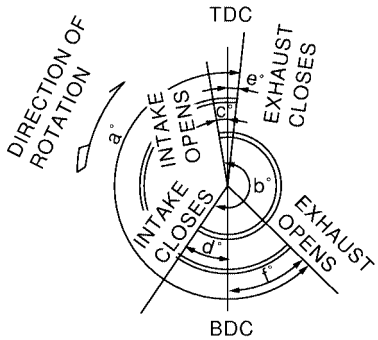 PBIC0187E	

Unit: degree

a	b	c	d	e	f
232°	230°	2°	48°	3°	49°

Drive Belt Deflection and Tension

Tension of drive belts	Auto adjustment by auto tensioner

Spark Plugs (Double Platinum Tipped)

Make	NGK
Standard type	PLFR5A-11
Hot type	PLFR4A-11

Cold type	PLFR6A-11
Gap (nominal)	1.1 mm (0.043 in)

Front Wheel Alignment (Unladen*1)

ELS00112

Drive type			4x2	4x4
Camber Degree minute (decimal degree)	Minimum		-0° 51′ (-0.85°)	-0° 34′ (-0.57°)
	Nominal		-0° 6′ (-0.10°)	0° 11′ (0.18°)
	Maximum		0° 39′ (0.65°)	0° 56′ (0.93°)
	Cross camber		0° 45′ (0.75°) or less	0° 45′ (0.75°) or less
Caster Degree minute (decimal degree)	Minimum	Standard	2° 43′ (2.72°)	2° 18′ (2.30°)
		Air leveling	3° 7′ (3.12°)	2° 41′ (2.68°)
	Nominal	Standard	3° 28′ (3.47°)	3° 3′ (3.05°)
		Air leveling	3° 52′ (3.87°)	3° 26′ (3.43°)
	Maximum	Standard	4° 13′ (4.22°)	3° 48′ (3.80°)
		Air leveling	4° 37′ (4.62°)	4° 11′ (4.18°)
	Cross caster		0° 45′ (0.75°) or less	0° 45′ (0.75°) or less
Kingpin inclination Degree minute (decimal degree)			13° 32′ (13.53°)	13° 13′ (13.22°)

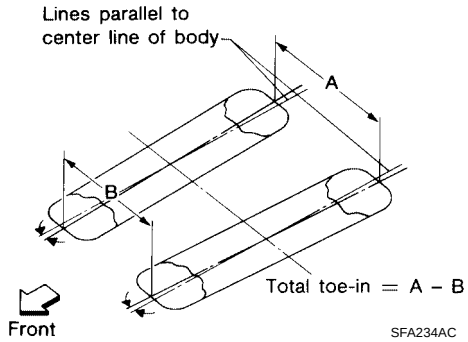

Total toe-in	Distance (A – B)	Minimum	1.8 mm (0.07 in)	1.8 mm (0.07 in)
		Nominal	2.8 mm (0.11 in)	2.8 mm (0.11 in)
		Maximum	3.8 mm (0.15 in)	3.8 mm (0.15 in)
	Angle (left plus right) Degree minute (Decimal degree)	Minimum	0° 3′ (0.05°)	0° 3′ (0.05°)
		Nominal	0° 5′ (0.8°)	0° 5′ (0.8°)
		Maximum	0° 7′ (0.12°)	0° 7′ (0.12°)
Wheel turning angle (full turn)	Inside Degree minute (Decimal degree)		34° 30′ – 38° 30′ *2 (34.50° – 38.50°)	34° 56′ – 38° 56′ *4 (34.93° – 38.93°)
	Outside Degree minute (Decimal degree)		30° 58′ – 34° 58′ *3 (30.97° – 34.97°)	31° 01′ – 35° 01′ *5 (31.02° – 35.02°)

*1: Fuel, radiator coolant and engine oil full. Spare tire, jack, hand tools and mats in designated positions.
*2: Target value 37° 30′ (37.50°)
*3: Target value 33° 58′ (33.97°)
*4: Target value 37° 56′ (37.93°)
*5: Target value 34° 01′ (34.02°)

Rear Wheel Alignment (Unladen*1)

ELS000ZS

Applied model		Without air leveling	With air leveling
Camber Degree minute (decimal degree)	Minimum	-0° 25′ (0.4°)	-1° 0′ (-1°)
	Nominal	0° 5′ (0.1°)	-0° 30′ (-0.5°)
	Maximum	0° 35′ (0.6°)	0° 0′ (0°)
	Cross camber	0° 45' (0.75°) or less	

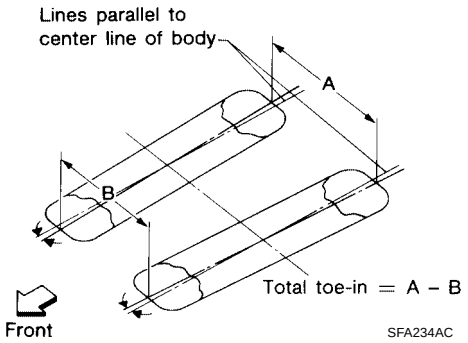

Total toe-in	Distance (A - B)	Minimum	- 2.4 mm (0.094 in)	0 mm (0 in)
		Nominal	0.9 mm (0.035 in)	3.3 mm (0.130 in)
		Maximum	4.2 mm (0.165 in)	6.6 mm (0.260 in)
		Cross toe	2 mm (0.079 in) or less	
	Angle (left plus right) Degree minute (decimal degree)	Minimum	-0° 5' (-0.8°)	0° 0' (0°)
		Nominal	0° 2' (0.03°)	0° 7' (0.11°)
		Maximum	0° 9' (0.14°)	0° 14' (0.22°)
		Cross toe	0° 8' (0.14°) or less	

*1: Fuel tank, engine coolant and engine oil full. Spare tire, jack, hand tools and mats in designated positions.

Brake

ELS000ZT

Unit: mm (in)

Front brake	Brake model	CLZ31VC
	Rotor outer diameter × thickness	320 × 26 (12.60 × 1.02)
	Pad Length × width × thickness	111.0 × 73.5 × 9.5 (4.73 × 2.894 × 0.374)
	Cylinder bore diameter	51 (2.01)
Rear brake	Brake model	AD14VE
	Rotor outer diameter × thickness	320 × 14 (12.60 × 0.55)
	Pad Length × width × thickness	83.0 × 33.0 × 8.5 (3.268 × 1.299 × 0.335)
	Cylinder bore diameter	48 (1.89)
Control valve	Valve model	Electric brake force distribution
Brake booster	Booster model	C215T
	Diaphragm diameter	215 (8.46)
Recommended brake fluid		Genuine NISSAN Heavy Duty Brake Fluid or equivalent DOT 3 (US FMVSS No. 116)

QUICK REFERENCE CHART PATHFINDER ARMADA

2004

Disc Brake - Repair Limits

ELS000ZU

Unit: mm (in)

Brake model		CLZ31VC (Front)	AD14VE (Rear)
Brake Pad	Standard thickness (new)	11.88 (0.468)	12.13 (0.478)
	Repair limit thickness	1.0 (0.039)	1.0 (0.039)
Disc rotor	Standard thickness (new)	26.0 (1.024)	14.0 (0.551)
	Repair limit thickness	24.5 (0.965)	12.0 (0.472)
	Maximum uneven wear (measured at 8 positions)	0.015 (0.0006)	0.015 (0.0006)
	Runout limit (with it attached to the vehicle)	0.04 (0.0016)	0.05 (0.0020)

Brake Pedal

ELS000ZV

Brake pedal height (from dash panel top surface)	182.3 – 192.3 mm (7.18 – 7.57 in)
Depressed pedal height [under a force of 490 N (50 kg, 110 lb) with engine running]	More than 90.3 mm (3.55 in)
Clearance between stopper rubber and the threaded end of stop lamp switch	0.74 – 1.96 mm (0.029 – 0.077 in)
Pedal play	3 – 11 mm (0.12 – 0.43 in)

Refill Capacities

ELS000YO

Description		Capacity (Approximate)		
		Metric	US measure	Imp measure
Fuel		105.8 ℓ	28 gal	23 1/4 gal
Engine oil Drain and refill	With oil filter change	6.2 ℓ	6 1/2 qt	5 1/2 qt
	Without oil filter change	5.9 ℓ	6 1/4 qt	5 1/4 qt
Dry engine (engine overhaul)		7.6 ℓ	8 qt	6 3/4 qt
Cooling system	With reservoir at MAX level	14.4 ℓ	3 3/4 gal	3 1/8 gal
Automatic transmission fluid (ATF)		10.6 ℓ	11 1/4 qt	9 3/8 qt
Rear final drive oil		1.75 ℓ	3 3/4 pt	3 1/8 pt
Transfer fluid		3.0 ℓ	3 1/8 qt	2 5/8 qt
Front final drive oil		1.6 ℓ	3 3/8 pt	2 7/8 pt
Power steering fluid (PSF)		1.0 ℓ	2 1/8 pt	1 3/4 pt
Windshield washer fluid		4.5 ℓ	1 1/4 gal	1 gal
Air conditioning system refrigerant		1.08 ± 0.05 kg	2.38 ± 0.11 lb	2.38 ± 0.11 lb
Air conditioning system lubricant		290 mℓ	9.8 fl oz	10.2 fl oz