SECTION SE
SEAT

A B C D E F G H I SE K L M N O P

CONTENTS

BASIC INSPECTION

DIAGNOSIS AND REPAIR WORKFLOW

Work Flow

INFOID:0000000001572429

WORK FLOW

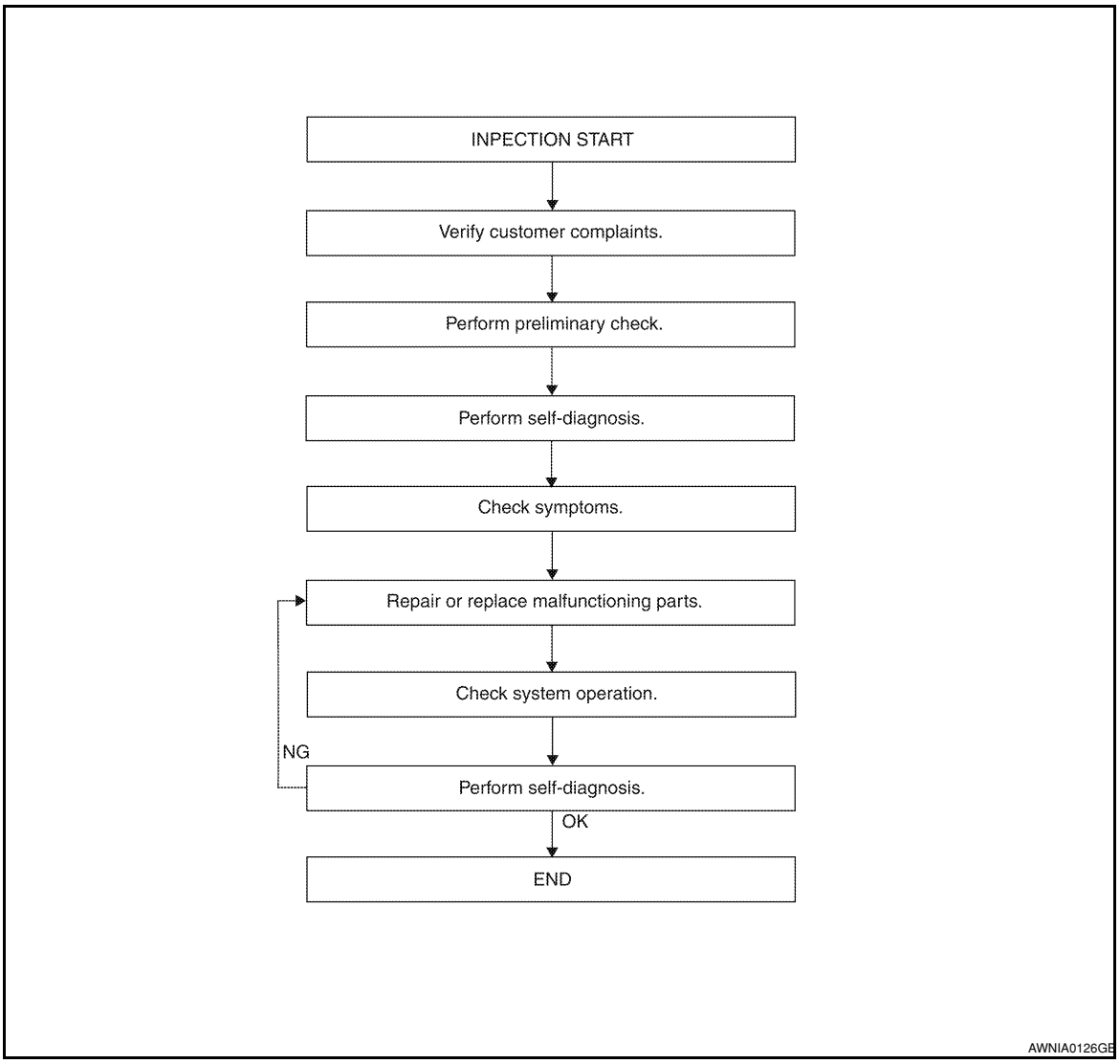

DETAILED FLOW

1. CUSTOMER INFORMATION

Interview the customer to obtain detailed information about the symptom.

>> GO TO 2

2. PRELIMINARY CHECK

Perform preliminary check. Refer to SE-5, "Preliminary Check".

>> GO TO 3

3. SELF-DIAGNOSIS

Perform self-diagnosis. Refer to SE-29, "DTC Index".

>> GO TO 4

4. SYMPTOM

Check for symptoms. Refer to SE-31, "Symptom Table".

>> GO TO 5

5. MALFUNCTIONING PARTS

Repair or replace the applicable parts.

>> GO TO 6

6. SYSTEM OPERATION

Check system operation.

>> GO TO 7

7. SELF-DIAGNOSIS

Perform self-diagnosis. Refer to SE-29, "DTC Index".

Are any fault codes indicated?

YES >> GO TO 5
NO >> Inspection End.

INSPECTION AND ADJUSTMENT

Preliminary Check

INFOID:0000000001346443

1. FOREIGN OBJECTS

Check the following:
- objects on or behind the seats that could cause binding
- objects under the seats that may be interfering with the seat's moving parts

Are there any foreign objects that could be causing interference with the seats?

YES >> Remove objects.
NO >> GO TO 2.

2. WIRING CONNECTIONS

1. Disconnect third row power folding seat control unit and seat motor harness connectors.
2. Check terminals for damage or loose connections.
3. Reconnect harness connectors.

Are any connectors damaged or loose?

YES >> Repair or replace damaged parts.
NO >> GO TO 3.

3. POWER AND GROUND

Check power supply and ground circuits for third row power folding seat control unit. Refer to SE-21, "Power Supply and Ground Circuit Check for Third Row Power Folding Seat Control Unit".

Is the inspection result normal?

YES >> Refer to SE-29, "DTC Index".
NO >> Repair or replace as necessary.

FUNCTION DIAGNOSIS

THIRD ROW POWER FOLDING SEAT

System Description

INFOID:0000000001346461

The third row power folding seat system is capable of allowing a user to fold up or down either the left or right third row seat using a set of front or rear mounted switches.

THIRD ROW POWER FOLDING SEAT CONTROL UNIT

The third row power folding seat control unit is located in the control unit/cross beam assembly underneath the LH third row seat. It receives signals from the third row power folding seat switches, TCM and the Hall effect switches mounted in the LH and RH seat motors. The control unit has self-diagnosis capability through chime codes and may be accessed by turning the ignition switch ON and OFF three times. The control unit drives the LH and RH seat motors to fold them up and down.

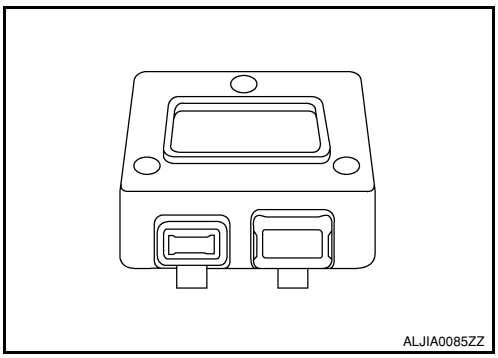

THIRD ROW POWER FOLDING SEAT SWITCH

The third row power folding seat switches are located in pairs on the luggage side finisher RH. A switch must be held in order for the seat to move.

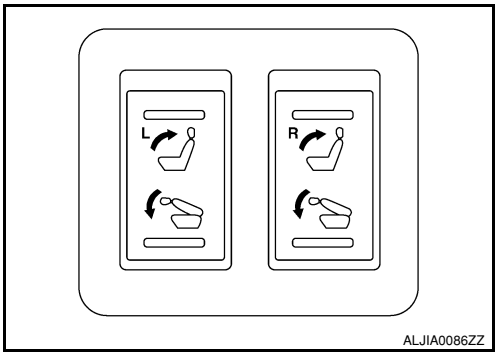

THIRD ROW POWER FOLDING SEAT MOTORS

The third row power folding seat motors are located in the seat motor/hinge assembly. There are two motors, one for LH and one for RH seat folding operations. Power and ground are provided to the motors by the third row power folding seat control unit. The control unit reverses polarity to the motors to raise or lower the seat. The motors also contain Hall effect switches. These switches send signals back to the control unit which help it determine fully open and closed positions.

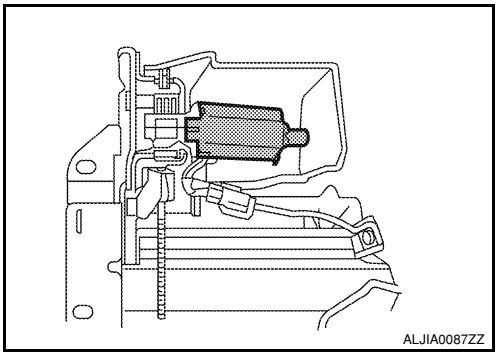

Component Parts Location

INFOID:0000000001346462

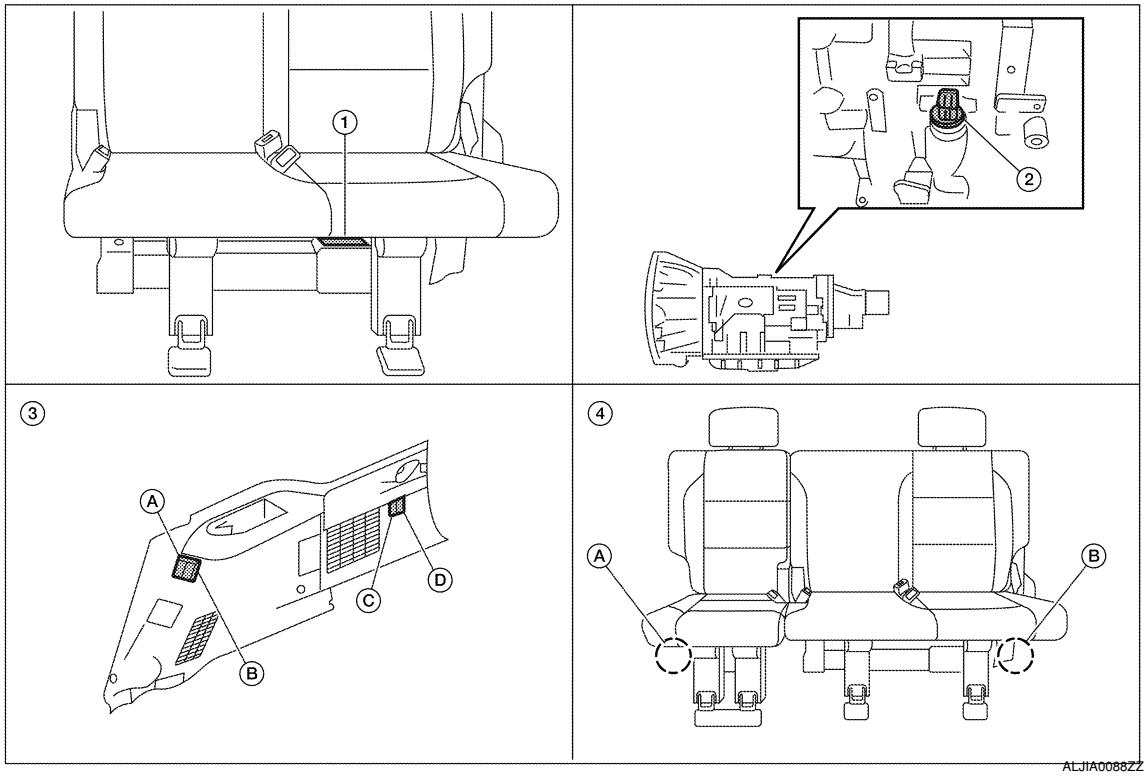

1. Third row power folding seat control unit B401, B402
2. A/T Assembly F9
3. Third row power folding seat switches
   A: Third row power folding seat switch LH side (front) B164
   B: Third row power folding seat switch RH side (front) B162
   C: Third row power folding seat switch LH side (rear) B165
   D: Third row power folding seat switch RH side (rear) B163
4. Third row power folding seat motors
   A: RH (40%) seat B426
   B: LH (60%) seat B403

Component Description

INFOID:0000000001346463

Component	Function
Third row power folding seat control unit	• Receive inputs from third row power folding seat switches and A/T assembly (PNP switch) • Drive third row power folding seat motors • Performs self-diagnostics
A/T assembly	Provide PNP switch signal to third row power folding seat control unit
Third row power folding seat switches	Provide fold up/fold down ground signals to third row power folding seat control unit
Third row power folding seat motors	• Fold seats up and down • Provide feedback signals to third row power folding seat control unit

COMPONENT DIAGNOSIS

POWER SEAT

Wiring Diagram — Driver Side Without Automatic Drive Positioner —

INFOID:0000000001308833

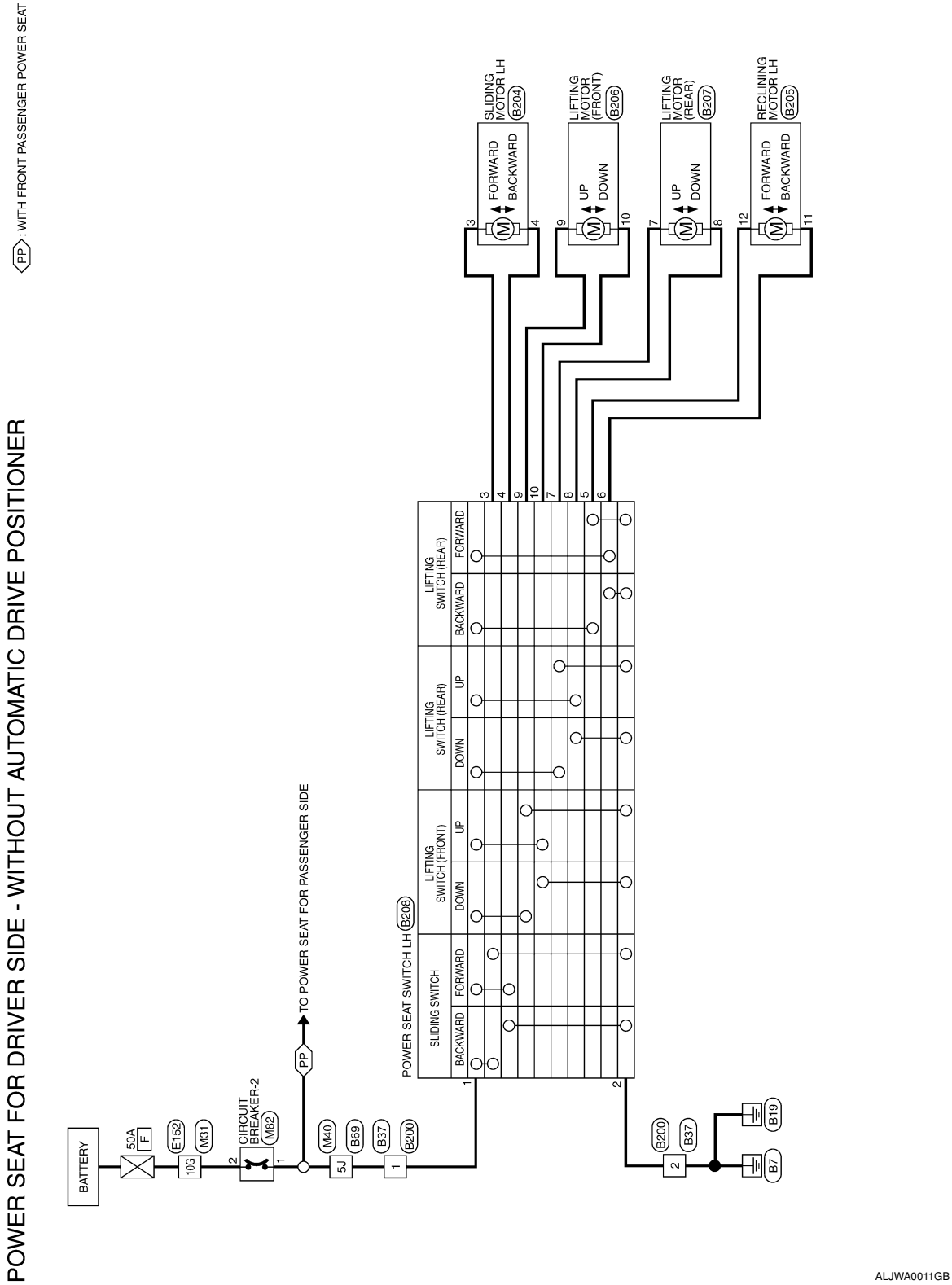

POWER SEAT FOR DRIVER SIDE CONNECTORS - WITHOUT AUTOMATIC DRIVE POSITIONER

Connector No.	M31
Connector Name	WIRE TO WIRE
Connector Color	WHITE

Terminal No.	Color of Wire	Signal Name
10G	W/B	–

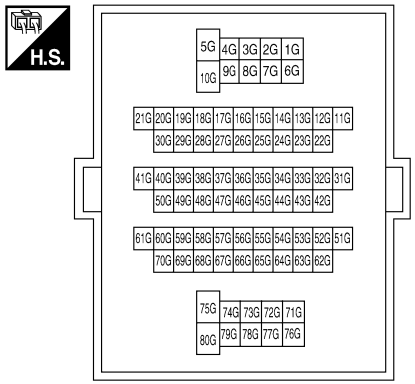

Connector No.	M40
Connector Name	WIRE TO WIRE
Connector Color	WHITE

Terminal No.	Color of Wire	Signal Name
5J	L/B	–

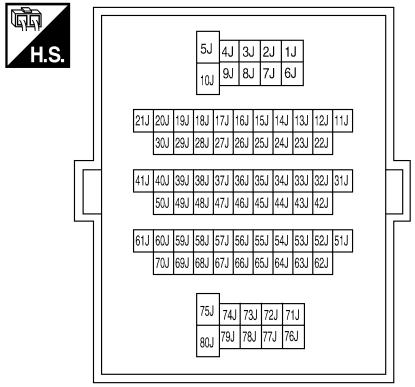

ALJIA0069GB

Connector No.	M82
Connector Name	CIRCUIT BREAKER-2
Connector Color	GRAY

Terminal No.	Color of Wire	Signal Name
1	W/B	–
2	L/B	–

Connector No.	E152
Connector Name	WIRE TO WIRE
Connector Color	WHITE

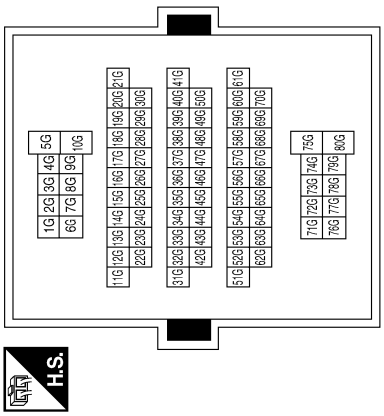

Terminal No.	Color of Wire	Signal Name
10G	W/B	–

Connector No.	B37
Connector Name	WIRE TO WIRE
Connector Color	WHITE

Terminal No.	Color of Wire	Signal Name
1	L/B	–
2	B/W	–

Connector No.	B69
Connector Name	WIRE TO WIRE
Connector Color	WHITE

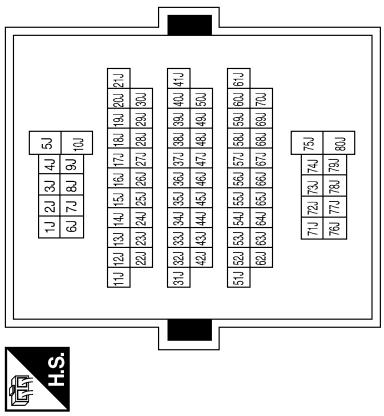

Terminal No.	Color of Wire	Signal Name
5J	L/B	–

Connector No.	B200
Connector Name	WIRE TO WIRE
Connector Color	WHITE

Terminal No.	Color of Wire	Signal Name
1	L/B	–
2	B/W	–

ALJIA0070GB

Connector No.	B204
Connector Name	SLIDING MOTOR LH
Connector Color	BLACK

Terminal No.	Color of Wire	Signal Name
3	W	–
4	O/B	–

Connector No.	B205
Connector Name	RECLINING MOTOR LH
Connector Color	BROWN

Terminal No.	Color of Wire	Signal Name
11	R/B	–
12	B/O	–

Connector No.	B206
Connector Name	LIFTING MOTOR (FRONT)
Connector Color	WHITE

Terminal No.	Color of Wire	Signal Name
9	W	–
10	G/R	–

Connector No.	B207
Connector Name	LIFTING MOTOR (REAR)
Connector Color	GRAY

Terminal No.	Color of Wire	Signal Name
7	L/R	–
8	B/W	–

Connector No.	B208
Connector Name	POWER SEAT SWITCH LH
Connector Color	WHITE

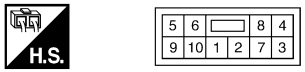

Terminal No.	Color of Wire	Signal Name
1	P/B	–
2	R/W	–

Terminal No.	Color of Wire	Signal Name
5	L/B	–
6	Y/B	–
7	R/B	–
8	G/W	–
9	O/B	–
10	G/B	–

ALJIA0071GB

Wiring Diagram — Passenger Side —

INFOID:0000000001586942

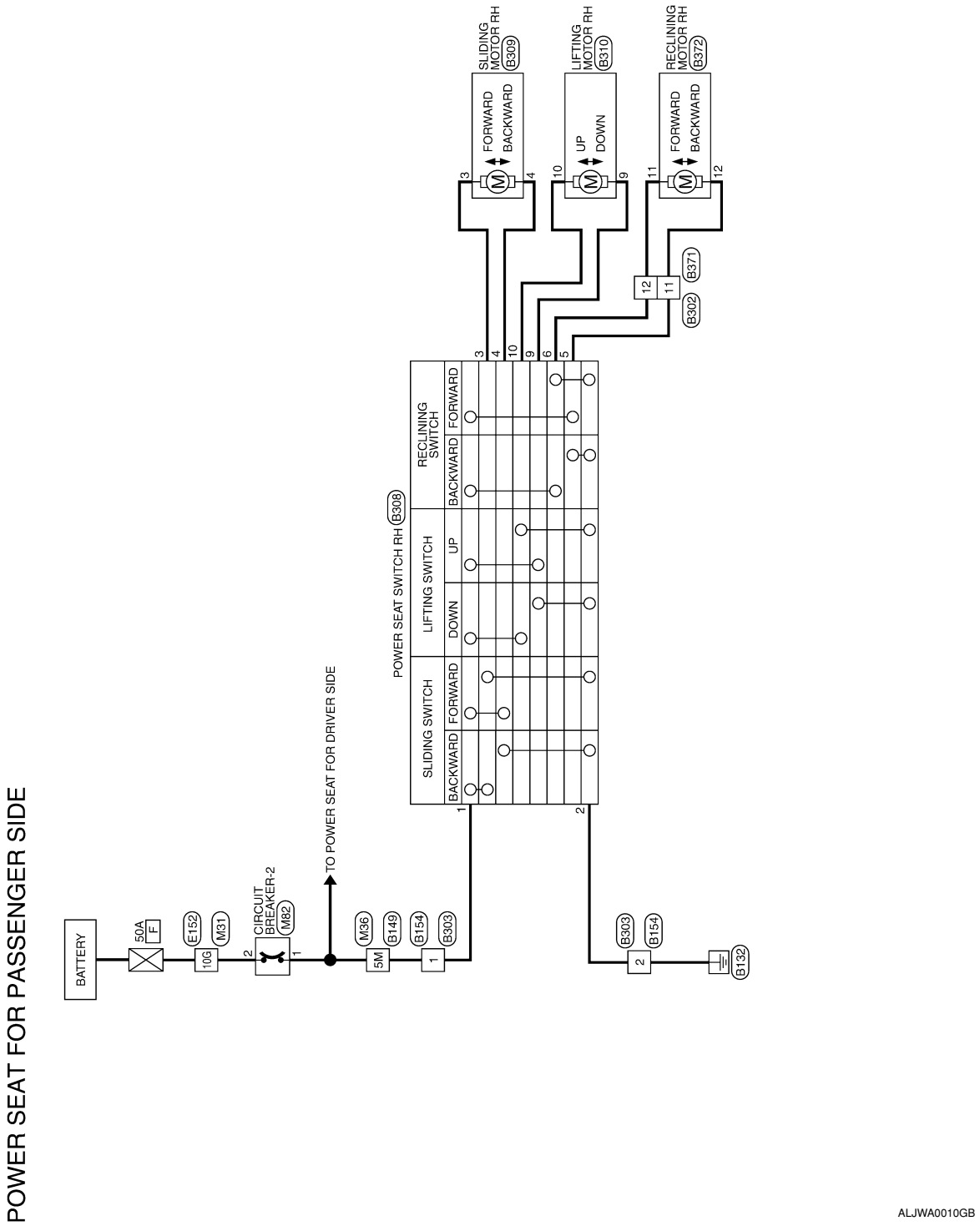

POWER SEAT FOR PASSENGER SIDE CONNECTORS

Connector No.	M31
Connector Name	WIRE TO WIRE
Connector Color	WHITE

H.S.

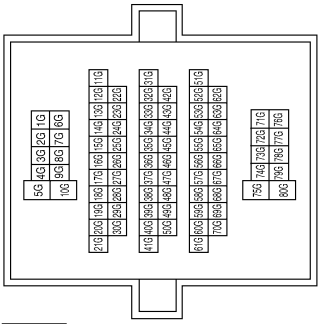

Terminal No.	Color of Wire	Signal Name
10G	W/B	–

Connector No.	M36
Connector Name	WIRE TO WIRE
Connector Color	WHITE

H.S.

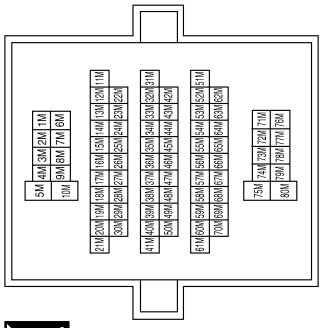

Terminal No.	Color of Wire	Signal Name
5M	W/L	–

Connector No.	M82
Connector Name	CIRCUIT BREAKER-2
Connector Color	GRAY

H.S.

Terminal No.	Color of Wire	Signal Name
1	L/B	–
2	W/B	–

Connector No.	E152
Connector Name	WIRE TO WIRE
Connector Color	WHITE

H.S.

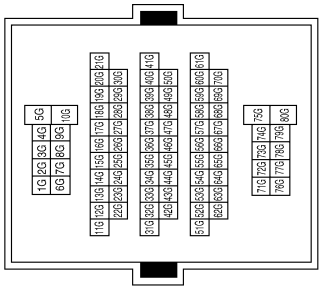

Terminal No.	Color of Wire	Signal Name
10G	W/B	–

ALJIA0072GB

Connector No.	B149
Connector Name	WIRE TO WIRE
Connector Color	WHITE

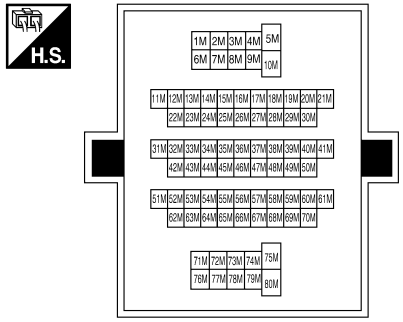

Terminal No.	Color of Wire	Signal Name
5M	W/L	–

Connector No.	B154
Connector Name	WIRE TO WIRE
Connector Color	WHITE

Terminal No.	Color of Wire	Signal Name
1	W/L	–
2	B	–

Connector No.	B302
Connector Name	WIRE TO WIRE
Connector Color	WHITE

Terminal No.	Color of Wire	Signal Name
11	G	–
12	B/Y	–

Connector No.	B303
Connector Name	WIRE TO WIRE
Connector Color	WHITE

Terminal No.	Color of Wire	Signal Name
1	W/L	–
2	B	–

Connector No.	B308
Connector Name	POWER SEAT SWITCH RH
Connector Color	WHITE

Terminal No.	Color of Wire	Signal Name
1	Y	—
2	R	
3	W/B	—
4	BR	
5	G	—
6	B/Y	
9	GR	—
10	W	

Connector No.	B309
Connector Name	SLIDING MOTOR RH
Connector Color	BLACK

Terminal No.	Color of Wire	Signal Name
3	W/B	–
4	BR	–

ALJIA0073GB

Connector No.	B310
Connector Name	LIFTING MOTOR RH
Connector Color	WHITE

Terminal No.	Color of Wire	Signal Name
9	W	–
10	GR	–

Connector No.	B371
Connector Name	WIRE TO WIRE
Connector Color	GRAY

Terminal No.	Color of Wire	Signal Name
11	B/O	–
12	R/B	–

Connector No.	B372
Connector Name	RECLINING MOTOR RH
Connector Color	WHITE

Terminal No.	Color of Wire	Signal Name
11	R/B	–
12	B/O	–

ALJIA0074GB

HEATED SEAT

Description

INFOID:0000000001306759

- When handling seat, be extremely careful not to scratch heating unit.
- Front passenger seat cushion and seatbacks equipped with airbags cannot be disassembled. They are replaced as assemblies only.
- Do not use any organic solvent, such as thinner, benzene, alcohol, etc. to clean trim.

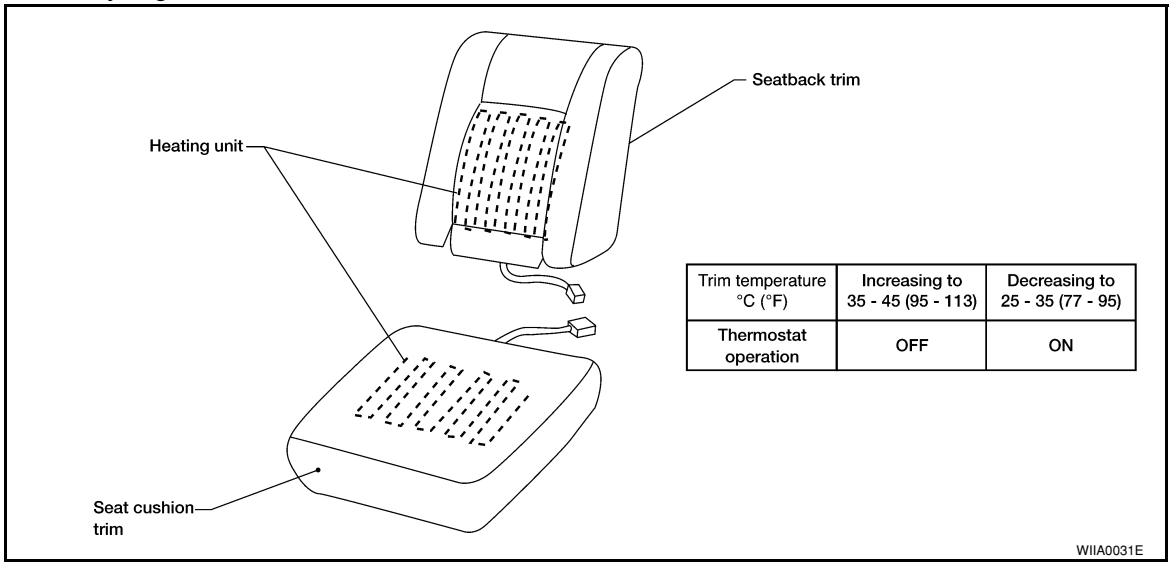

Trim temperature °C (°F)	Increasing to 35 - 45 (95 - 113)	Decreasing to 25 - 35 (77 - 95)
Thermostat operation	OFF	ON

Wiring Diagram

INFOID:0000000001308834

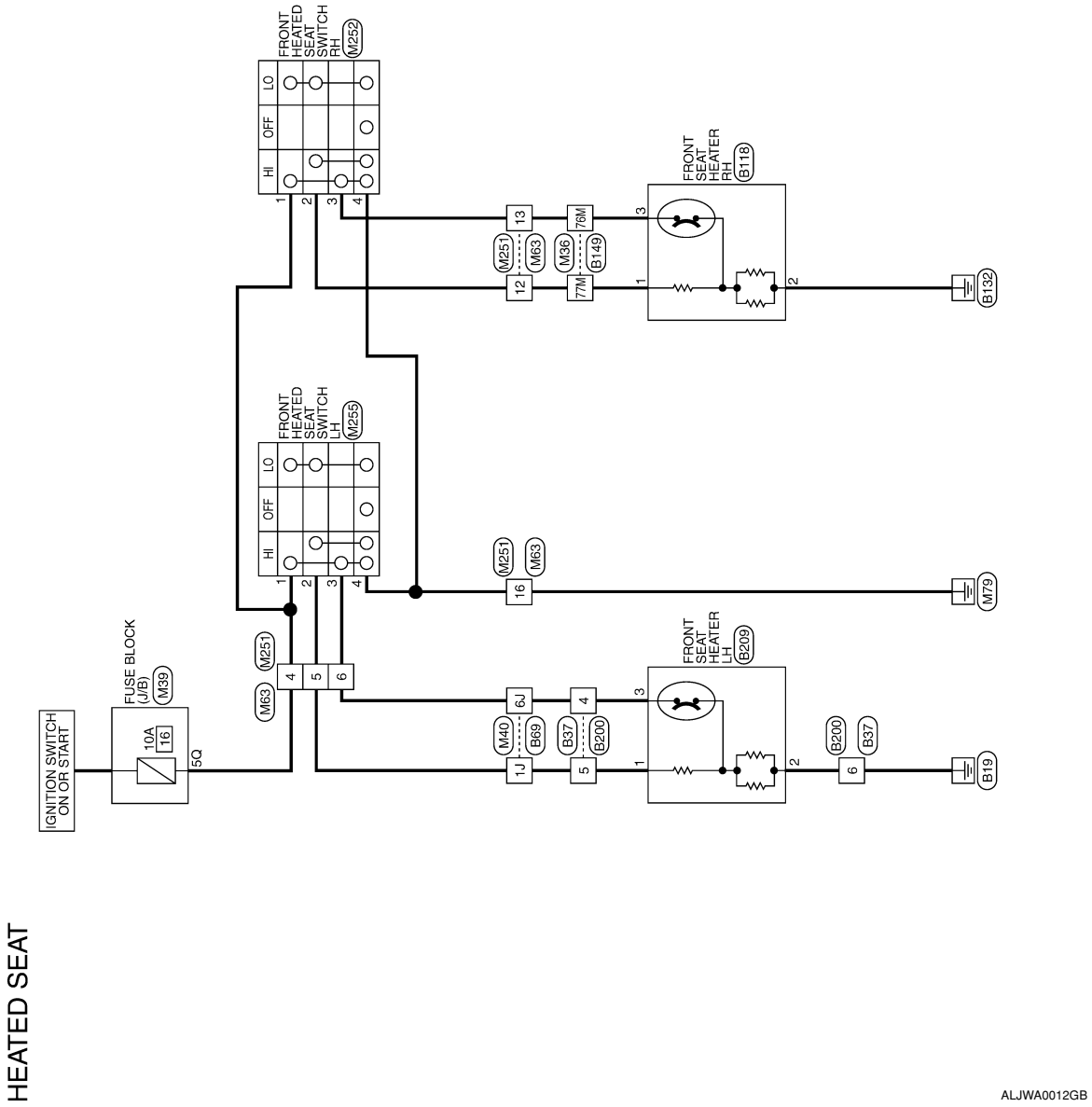

HEATED SEAT CONNECTORS

Connector No.	M36
Connector Name	WIRE TO WIRE
Connector Color	WHITE

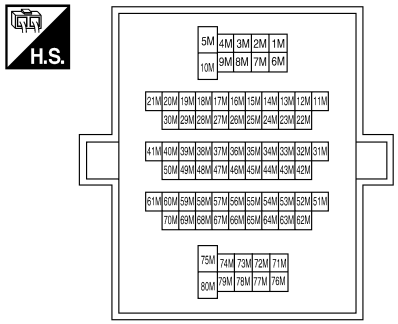

Terminal No.	Color of Wire	Signal Name
76M	GR/B	–
77M	GR/L	–

Connector No.	M39
Connector Name	FUSE BLOCK (J/B)
Connector Color	WHITE

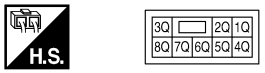

Terminal No.	Color of Wire	Signal Name
5Q	G	–

Connector No.	M40
Connector Name	WIRE TO WIRE
Connector Color	WHITE

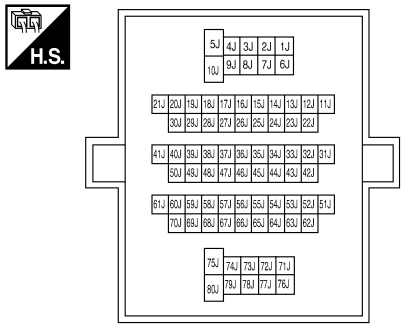

Terminal No.	Color of Wire	Signal Name
1J	GR	–
6J	L/B	–

Connector No.	M63
Connector Name	WIRE TO WIRE
Connector Color	BROWN

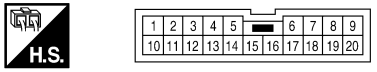

Terminal No.	Color of Wire	Signal Name
4	G	–
5	GR	–
6	L/B	–
12	GR/L	–
13	GR/B	–
16	B	–

ALIJIA0061GB

Connector No.	M251
Connector Name	WIRE TO WIRE
Connector Color	BROWN

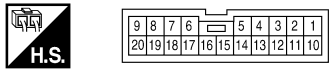

Terminal No.	Color of Wire	Signal Name
4	G	–
5	GR	–
6	L/B	–
12	GR/L	–
13	GR/B	–
16	B	–

Connector No.	M252
Connector Name	FRONT HEATED SEAT SWITCH RH
Connector Color	BROWN

Terminal No.	Color of Wire	Signal Name
1	G	–
2	GR/L	–
3	GR/B	–
4	B	–

Connector No.	M255
Connector Name	FRONT HEATED SEAT SWITCH LH
Connector Color	BROWN

Terminal No.	Color of Wire	Signal Name
1	G	–
2	GR	–
3	L/B	–
4	B	–

Connector No.	B37
Connector Name	WIRE TO WIRE (WITH AUTOMATIC DRIVE POSITIONER)
Connector Color	WHITE

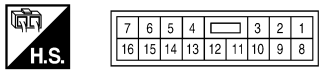

Terminal No.	Color of Wire	Signal Name
4	L/B	–
5	GR	–
6	B	–

Connector No.	B37
Connector Name	WIRE TO WIRE (WITHOUT AUTOMATIC DRIVE POSITIONER)
Connector Color	WHITE

Terminal No.	Color of Wire	Signal Name
4	L/B	–
5	GR	–
6	B	–

ALJIA0062GB

Connector No.	B69
Connector Name	WIRE TO WIRE
Connector Color	WHITE

H.S.

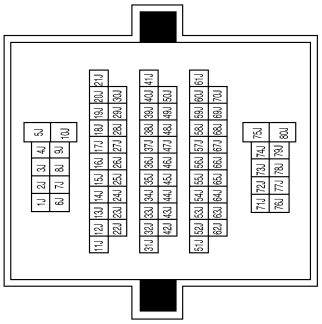

Terminal No.	Color of Wire	Signal Name
1J	GR	–
6J	L/B	–

Connector No.	B118
Connector Name	FRONT SEAT HEATER RH
Connector Color	WHITE

H.S.

Terminal No.	Color of Wire	Signal Name
1	GR/L	–
2	B	–
3	GR/B	–

Connector No.	B149
Connector Name	WIRE TO WIRE
Connector Color	WHITE

H.S.

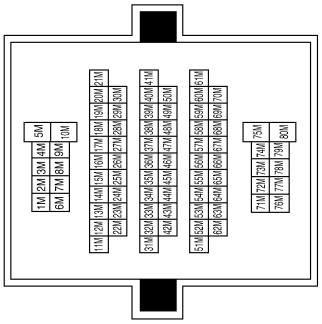

Terminal No.	Color of Wire	Signal Name
76M	GR/B	–
77M	GR/L	–

Connector No.	B200
Connector Name	WIRE TO WIRE (WITH AUTOMATIC DRIVE POSITIONER)
Connector Color	WHITE

H.S.

Terminal No.	Color of Wire	Signal Name
4	L/B	–
5	GR	–
6	B	–

Connector No.	B200
Connector Name	WIRE TO WIRE (WITHOUT AUTOMATIC DRIVE POSITIONER)
Connector Color	WHITE

H.S.

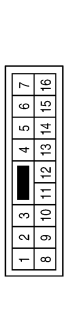

Terminal No.	Color of Wire	Signal Name
4	L/B	–
5	GR	–
6	B	–

Connector No.	B209
Connector Name	FRONT SEAT HEATER LH
Connector Color	WHITE

H.S.

Terminal No.	Color of Wire	Signal Name
1	GR	–
2	B	–
3	L/B	–

ALJIA0063GB

THIRD SEAT

Power Supply and Ground Circuit Check for Third Row Power Folding Seat Control Unit

INFOID:0000000001349101

1. CHECK FUSES AND FUSIBLE LINK

Check for blown fuses or fusible link.

Unit	Power source	Fuse or Fusible Link	Location
Third row power folding seat control unit	Battery	F	Fuse and fusible link box
		19	Fuse block (J/B)
	Ignition switch ON or START	14	

Are any fuses or fusible links blown?

YES >> Install new fuse. Eliminate cause of malfunction if fuse blows again.
NO >> GO TO 2

2. POWER SUPPLY CIRCUIT CHECK

1. Disconnect third row power folding seat control unit connectors B401 and B402.
2. Check voltage between third row power folding seat control unit harness connectors B401, B402 terminals 1, 8, 13, 14 and ground.

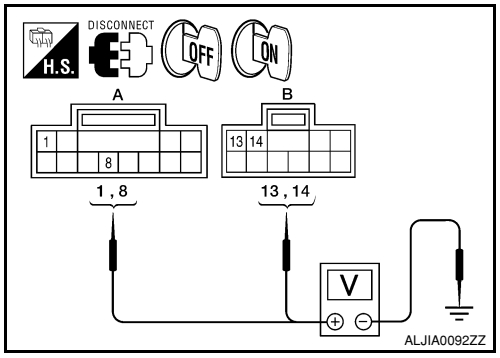

Terminals			Ignition switch position		
(+)		(–)	OFF	ON	START
Connector	Terminal				
A: B401	1	Ground	Battery voltage		
	8		0V	Battery voltage	
B: B402	13		Battery voltage		
	14		Battery voltage		

Are the inspection results normal?

YES >> GO TO 3
NO >> Check harness for open between third row power folding seat control unit and fuse or fusible link.

3. GROUND CIRCUIT CHECK

1. Turn ignition switch OFF.
2. Check continuity between third row power folding seat control unit harness connector B402 terminals 16, 18, 21 and ground.

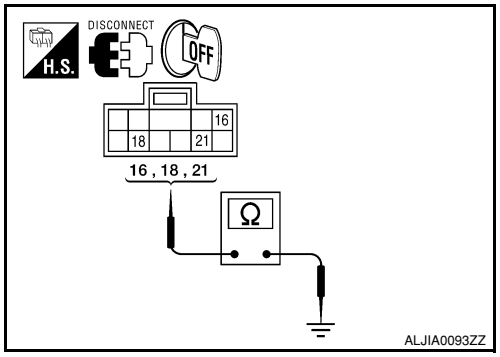

Terminals			Continuity
(+)		(–)	
Connector	Terminal		
B402	16	Ground	Yes
	18		
	21		

Do all terminals have ground?

YES >> Inspection End.
NO >> Check harness for ground.

Third Row Power Folding Seat Switch

INFOID:0000000001346491

1. CHECK THIRD ROW POWER FOLDING SEAT SWITCH OPERATION

1. Turn ignition switch OFF.
2. Disconnect third row power folding seat switch.
3. Check continuity between third row power folding seat switch terminals 2, 3 and 4.

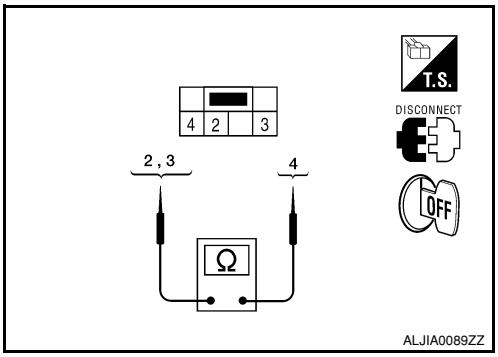

Terminals		Condition	Continuity
2	4	Press switch button to fold up.	Yes
3	4	Press switch button to fold down.	Yes

Do you have continuity?

YES >> Inspection End.
NO >> Replace third row power folding seat switch. Refer to INT-18, "Removal and Installation".

Third Row Power Folding Seat Motor

INFOID:0000000001346492

1. CHECK MOTOR OPERATION

1. Turn ignition switch OFF.
2. Disconnect third row power folding seat motor connector B403 or B426.
3. Check operation by applying battery voltage to motor terminals 3 and 4.

CAUTION:
- **Do not operate motor for more than 3 seconds.**
- **Be careful not to overheat the harness.**
- **Third row power folding seat control unit may have to relearn fold up/down positions after testing.**

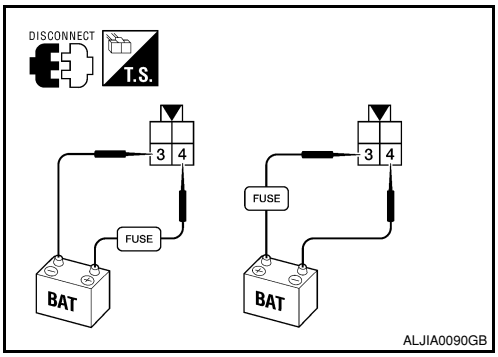

Terminal	Motor	Seat
3 (Battery positive) - 4 (Battery negative)	Rotates counter-clockwise	Down
4 (Battery positive) - 3 (Battery negative)	Rotates clockwise	Up

Does the motor rotate in both directions?

YES >> GO TO 2.
NO >> Replace third row power seat motor. Refer to SE-60, "Exploded View".

2. CHECK RESISTANCE IN MOTOR

Check resistance between motor terminals 3 and 4.

3 - 4 : Approx. 0.5 Ω

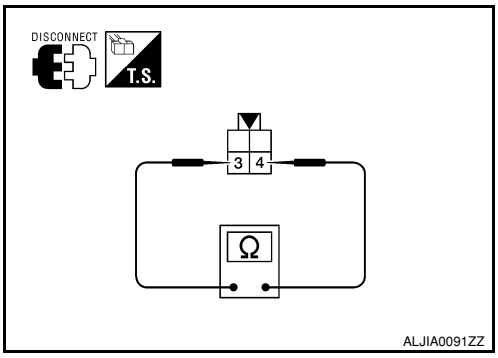

Is the resistance reading of the motor normal?

YES >> Inspection End.
NO >> Replace third row power seat motor. Refer to SE-60, "Exploded View".

ECU DIAGNOSIS

THIRD ROW POWER FOLDING SEAT CONTROL UNIT

Reference Value

INFOID:0000000001346519

TERMINAL LAYOUT

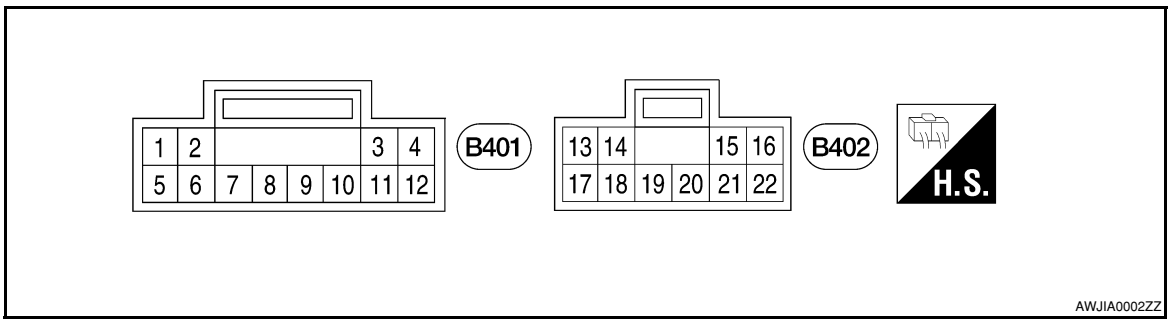

PHYSICAL VALUES

Terminal No. +	Terminal No. -	Wire color	Description: Signal name	Description: Input/Output	Condition	Voltage (V) (Approx.)
1	Ground	Y/R	Battery	Input	—	Battery voltage
3	Ground	LG	40% seat switch signal (down)	Output	Push either third row power folding seat switch RH (down)	0
					Third row power folding seat switch (RH) released	Battery voltage
4	Ground	V	60% seat switch signal (down)	Output	Push either third row power folding seat switch LH (down)	0
					Third row power folding seat switch (LH) released	Battery voltage
7	Ground	G/R	Park signal	Input	A/T selector lever in P or N	Battery voltage
					A/T selector lever not in P or N	0
8	Ground	O/L	Ignition signal	Input	Ignition switch ON or START	Battery voltage
					Ignition switch OFF	0
9	Ground	G/B	40% seat Hall signal	Input	—	9V
10	Ground	O/B	60% seat Hall signal	Input	—	9V
11	Ground	SB	40% seat switch signal (up)	Output	Push either third row power folding seat switch RH (up)	0
					Third row power folding seat switch (RH) released	Battery voltage
12	Ground	O	60% seat switch signal (up)	Output	Push either third row power folding seat switch LH (up)	0
					Third row power folding seat switch (LH) released	Battery voltage
13	Ground	W	Battery	Input	—	Battery voltage
14	Ground	W	Battery	Input	—	Battery voltage
15	Ground	Y/B	Hall switch ground	—	—	—
16	Ground	B	Switch ground	—	—	—
17	Ground	W/L	60% Seat motor	Output	—	Battery voltage
18	Ground	B	Ground	—	—	—
19	Ground	R/W	60% Seat motor	Output	—	Battery voltage

Terminal No.		Wire color	Description		Condition	Voltage (V) (Approx.)
+	-		Signal name	Input/ Output		
20	Ground	G/W	40% Seat motor	Output	—	Battery voltage
21	Ground	B	Ground	—	—	—
22	Ground	PU	40% Seat motor	Output	—	Battery voltage

Wiring Diagram

INFOID:0000000001308901

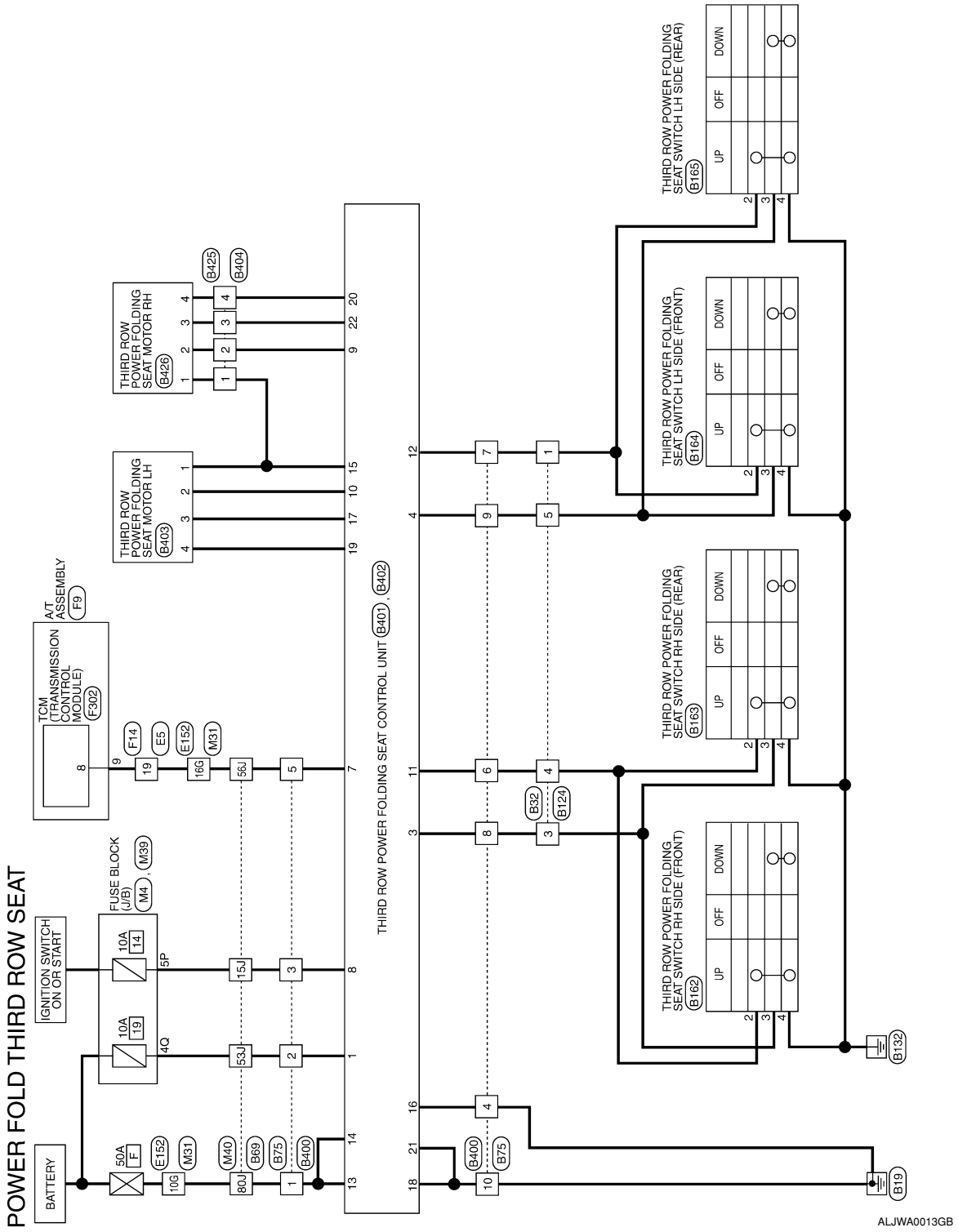

POWER FOLD THIRD ROW SEAT CONNECTORS

Connector No.	M4
Connector Name	FUSE BLOCK (J/B)
Connector Color	WHITE

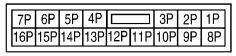

Terminal No.	Color of Wire	Signal Name
5P	O/L	–

Connector No.	M31
Connector Name	WIRE TO WIRE
Connector Color	WHITE

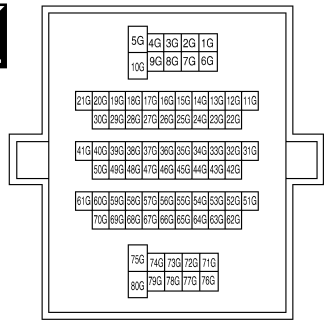

Terminal No.	Color of Wire	Signal Name
10G	W/B	–
16G	B/R	–

Connector No.	M39
Connector Name	FUSE BLOCK (J/B)
Connector Color	WHITE

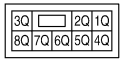

Terminal No.	Color of Wire	Signal Name
4Q	Y/R	–

Connector No.	M40
Connector Name	WIRE TO WIRE
Connector Color	WHITE

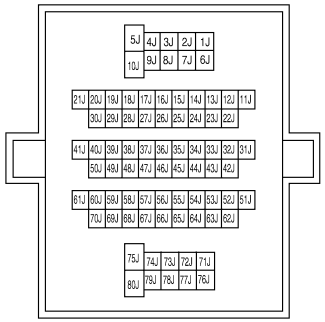

Terminal No.	Color of Wire	Signal Name
15J	O/L	–
53J	Y/R	–
56J	GR/R	–
80J	W	–

ALJIA0065GB

Connector No.	E5
Connector Name	WIRE TO WIRE
Connector Color	WHITE

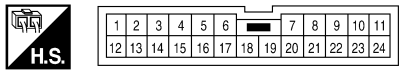

Terminal No.	Color of Wire	Signal Name
19	B/R	–

Connector No.	E152
Connector Name	WIRE TO WIRE
Connector Color	WHITE

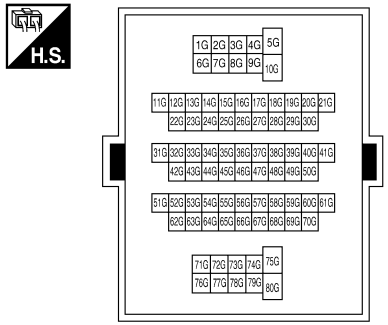

Terminal No.	Color of Wire	Signal Name
10G	W/B	–
16G	B/R	–

Connector No.	F9
Connector Name	A/T ASSEMBLY
Connector Color	GREEN

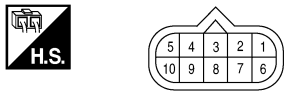

Terminal No.	Color of Wire	Signal Name
9	B/R	–

Connector No.	F14
Connector Name	WIRE TO WIRE
Connector Color	WHITE

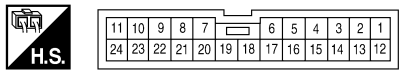

Terminal No.	Color of Wire	Signal Name
19	B/R	–

Connector No.	F502
Connector Name	TCM (TRANSMISSION CONTROL MODULE)
Connector Color	GRAY

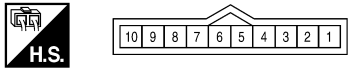

Terminal No.	Color of Wire	Signal Name
8	G	START-RLY

ALJIA0066GB

Connector No.	B32
Connector Name	WIRE TO WIRE
Connector Color	WHITE

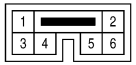

Terminal No.	Color of Wire	Signal Name
1	O	–
3	LG	–
4	SB	–
5	V	–

Connector No.	B69
Connector Name	WIRE TO WIRE
Connector Color	WHITE

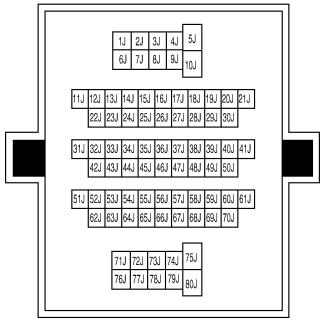

Terminal No.	Color of Wire	Signal Name
15J	O/L	–
53J	Y/R	–
56J	GR/R	–
80J	W	–

Connector No.	B75
Connector Name	WIRE TO WIRE
Connector Color	WHITE

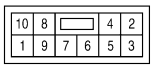

Terminal No.	Color of Wire	Signal Name
1	W	–

Terminal No.	Color of Wire	Signal Name
2	Y/R	–
3	O/L	–
4	B	–
5	GR/R	–
6	SB	–
7	O	–
8	LG	–
9	V	–
10	B	–

Connector No.	B124
Connector Name	WIRE TO WIRE
Connector Color	WHITE

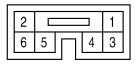

Terminal No.	Color of Wire	Signal Name
1	O	–
3	LG	–
4	SB	–
5	V	–

ALJIA0067GB

Connector No.	B162
Connector Name	THIRD ROW POWER FOLDING SEAT SWITCH RH SIDE (FRONT)
Connector Color	WHITE

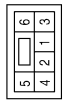

H.S.

Terminal No.	Color of Wire	Signal Name
2	SB	–
3	LG	–
4	BR	–

Connector No.	B163
Connector Name	THIRD ROW POWER FOLDING SEAT SWITCH RH SIDE (REAR)
Connector Color	BROWN

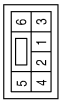

H.S.

Terminal No.	Color of Wire	Signal Name
2	SB	–
3	LG	–
4	BR	–

Connector No.	B164
Connector Name	THIRD ROW POWER FOLDING SEAT SWITCH LH SIDE (FRONT)
Connector Color	BROWN

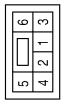

H.S.

Terminal No.	Color of Wire	Signal Name
2	O	–
3	V	–
4	BR	–

Connector No.	B165
Connector Name	THIRD ROW POWER FOLDING SEAT SWITCH LH SIDE (REAR)
Connector Color	BROWN

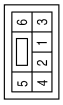

H.S.

Terminal No.	Color of Wire	Signal Name
2	O	–
3	V	–
4	BR	–

Connector No.	B400
Connector Name	WIRE TO WIRE
Connector Color	WHITE

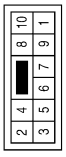

H.S.

Terminal No.	Color of Wire	Signal Name
1	W	–
2	Y/R	–
3	O/L	–
4	B	–
5	GR/R	–
6	SB	–
7	O	–
8	LG	–
9	V	–
10	B	–

Connector No.	B401
Connector Name	THIRD ROW POWER FOLDING SEAT CONTROL UNIT
Connector Color	GRAY

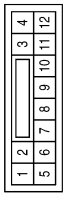

H.S.

Terminal No.	Color of Wire	Signal Name
1	Y/R	BAT LOG
3	LG	40 SW DN
4	V	60 SW DN
7	GR/R	PARK
8	O/L	IGN
9	G/B	HALL+
10	O/B	HALL+
11	SB	40 SW UP
12	O	60 SW UP

ALJIA0068GB

Connector No.	B402
Connector Name	THIRD ROW POWER FOLDING SEAT CONTROL UNIT
Connector Color	WHITE

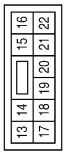

Terminal No.	Color of Wire	Signal Name
13	W	BAT
14	W	BAT
15	Y/B	HALL-
16	B	SW REF
17	W/L	60 DWN
18	B	GND
19	R/W	60 UP
20	G/W	40 UP
21	B	GND
22	V	40 DWN

Connector No.	B403
Connector Name	THIRD ROW POWER FOLDING SEAT MOTOR LH
Connector Color	GRAY

Terminal No.	Color of Wire	Signal Name
1	Y/B	HALL-
2	O/B	HALL+
3	W/L	60 DN
4	R/W	60 UP

Connector No.	B404
Connector Name	WIRE TO WIRE
Connector Color	WHITE

Terminal No.	Color of Wire	Signal Name
1	Y/B	–
2	G/B	–
3	V	–
4	G/W	–

Connector No.	B425
Connector Name	WIRE TO WIRE
Connector Color	WHITE

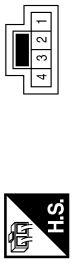

Terminal No.	Color of Wire	Signal Name
1	Y/B	–
2	G/B	–
3	V	–
4	G/W	–

Connector No.	B426
Connector Name	THIRD ROW POWER FOLDING SEAT MOTOR RH
Connector Color	GRAY

Terminal No.	Color of Wire	Signal Name
1	Y/B	–
2	G/B	–
3	V	–
4	G/W	–

ALJIA0094GB

DTC Index

INFOID:0000000001572430

NOTE:
To initiate a chime code sequence cycle, turn the ignition switch ON and OFF 3 times within 5 seconds. The first digit will chime, then a pause, followed by the second digit. For example, a code 13 will have 1 chime, followed by a pause, and then 3 chimes. The third row power folding seat control unit will clear all codes that have been corrected after 255 ignition cycles.

DTC	Malfunction	Service Procedure
11	LH seat has traveled past normal fold down position	1. Perform Preliminary Check. Refer to SE-5, "Preliminary Check". 2. Check third row power folding seat motor LH Hall signal and ground circuits. Refer to SE-36, "Third Row Power Folding Seat Stops Short of its Fully Up or Down Position". 3. Replace third row power folding seat motor LH. Refer to SE-60, "Exploded View".
12	LH seat has traveled past normal fold up position	
13	LH seat actuation cycle has taken too long and timed out	1. Perform Preliminary Check. Refer to SE-5, "Preliminary Check". 2. Check third row power folding seat motor LH motor circuits. Refer to SE-33, "Only One Third Row Power Folding Seat Will Operate". 3. Replace third row power folding seat motor LH. Refer to SE-60, "Exploded View".
14	Third row power folding seat control unit NVRAM data for LH seat position has been corrupted	Replace third row power folding seat control unit. Refer to SE-63, "Power seat cross beam".
15	Power supply to third row power folding seat control unit has been interrupted during LH seat fold up/down cycle	1. Perform Preliminary Check. Refer to SE-5, "Preliminary Check". 2. Replace third row power folding seat control unit. Refer to SE-63, "Power seat cross beam".
21	RH seat has traveled past normal fold down position	1. Perform Preliminary Check. Refer to SE-5, "Preliminary Check". 2. Check third row power folding seat motor RH Hall signal and ground circuits. Refer to SE-36, "Third Row Power Folding Seat Stops Short of its Fully Up or Down Position". 3. Replace third row power folding seat motor RH. Refer to SE-60, "Exploded View".
22	RH seat has traveled past normal fold up position	
23	RH seat actuation cycle has taken too long and timed out	1. Perform Preliminary Check. Refer to SE-5, "Preliminary Check". 2. Check third row power folding seat motor RH motor circuits. Refer to SE-33, "Only One Third Row Power Folding Seat Will Operate". 3. Replace third row power folding seat motor RH. Refer to SE-60, "Exploded View".
24	Third row power folding seat control unit NVRAM data for RH seat position has been corrupted	Replace third row power folding seat control unit. Refer to SE-63, "Power seat cross beam".
25	Power supply to third row power folding seat control unit has been interrupted during RH seat fold up/down cycle	1. Perform Preliminary Check. Refer to SE-5, "Preliminary Check". 2. Replace third row power folding seat control unit. Refer to SE-63, "Power seat cross beam".
33	System normal or END of chime codes	—

Fail Safe

INFOID:0000000001374642

The third row power folding seat will not operate under the following conditions:
- Power supply to the third row power folding seat control unit falls below 9.0V
- One of the third row power folding seat switches is stuck closed
- The A/T selector lever is not in PARK position and the ignition switch is ON

SYMPTOM DIAGNOSIS

THIRD ROW POWER FOLDING SEAT

Symptom Table

INFOID:0000000001374641

Symptom	Reference
None of the third row power folding seats will operate with any switch.	Refer to SE-32, "None of the Third Row Power Folding Seats Will Operate With Any Third Row Power Folding Seat Switch".
Only one third row power folding seat will operate.	Refer to SE-33, "Only One Third Row Power Folding Seat Will Operate".
Third row power folding seat will operate in only one direction.	Refer to SE-35, "Third Row Power Folding Seat Will Operate in Only One Direction".
Third row power folding seat will stop short of its fully up or down position.	Refer to SE-36, "Third Row Power Folding Seat Stops Short of its Fully Up or Down Position".
Third row power folding seat makes excessive noise while moving.	Refer to SE-37, "Third Row Power Folding Seat Makes Excessive Noise While Moving".
Seats make squeak or rattle noise.	Refer to SE-38, "Work Flow".

NONE OF THE THIRD ROW POWER FOLDING SEATS WILL OPERATE WITH ANY SWITCH.

None of the Third Row Power Folding Seats Will Operate With Any Third Row Power Folding Seat Switch

INFOID:0000000001536801

1. PRELIMINARY CHECK

Perform preliminary check. Refer to SE-5, "Preliminary Check".

Are inspection results normal?

YES >> GO TO 2.
NO >> Perform repairs as necessary.

2. THIRD ROW POWER FOLDING SEAT SWITCH GROUND

1. Turn ignition switch OFF.
2. Disconnect any third row power folding seat switch connector.
3. Check continuity between third row power folding seat switch harness connector terminal 4 and ground.

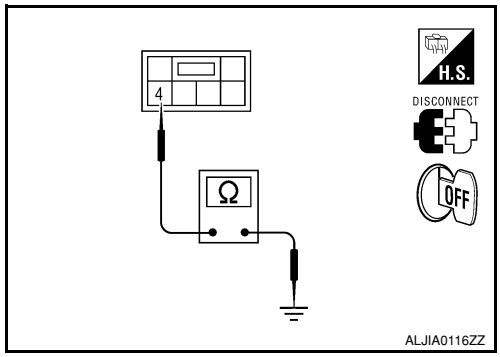

Is there continuity?

YES >> GO TO 3.
NO >> Repair ground circuit.

3. PNP SWITCH SIGNAL

1. Confirm A/T selector lever is in PARK position.
2. Turn ignition switch ON.
3. Check voltage between third row power folding seat control unit harness connector B401 terminal 7 and ground.

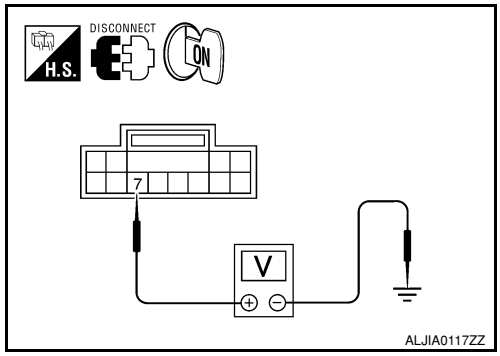

Terminals			Ignition switch
(+)		(-)	ON
Third row power folding seat control unit	Terminal No.		
B401	7	Ground	Battery voltage

Is there battery voltage?

YES >> Replace third row power folding seat control unit. Refer to SE-63, "Power seat cross beam".
NO >> Repair circuit as necessary.

ONLY ONE THIRD ROW POWER FOLDING SEAT WILL OPERATE.

Only One Third Row Power Folding Seat Will Operate

INFOID:0000000001536807

1. PRELIMINARY CHECK

Perform preliminary check. Refer to SE-5, "Preliminary Check".

Are inspection results normal?

YES >> GO TO 2.
NO >> Perform repairs as necessary.

2. THIRD ROW POWER FOLDING SEAT

Determine which seat is malfunctioning.

Is the affected seat the LH (60%) side?

YES >> GO TO 3.
NO >> GO TO 4.

3. THIRD ROW POWER FOLDING SEAT SWITCH LH

1. Turn ignition switch OFF.
2. Disconnect either the front or rear third row power folding seat switch LH connector.
3. Check continuity between the third row power folding seat switch LH harness connector B164 or B165 terminal 4 and ground.

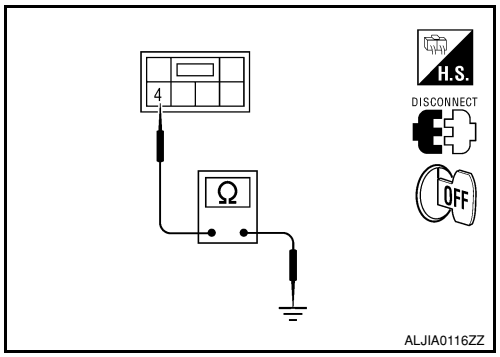

Terminals			Continuity
(+)		(-)	
Third row power folding seat switch LH	Terminal No.		
B164 or B165	4	Ground	Yes

4. Check continuity between any third row power folding seat switch LH harness connector B164 or B165 terminal 2, 3 and third row power folding seat control unit harness connector B401 terminals 4, 12.

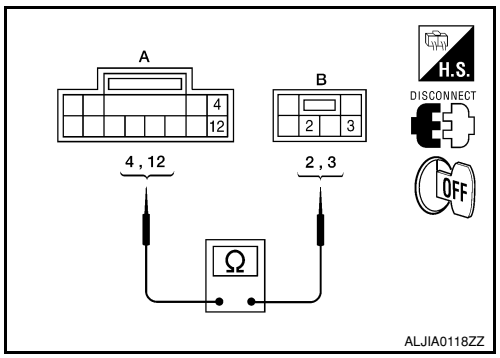

Terminals				Continuity
A		B		
Connector	Terminal	Connector	Terminal	
B401	4	B164 or B165	3	Yes
	12		2	

Are inspection results normal?

YES >> GO TO 5.
NO >> Repair circuits as necessary.

4. THIRD ROW POWER FOLDING SEAT SWITCH RH

1. Turn ignition switch OFF.
2. Disconnect either the front or rear third row power folding seat switch RH connector.

3. Check continuity between any third row power folding seat switch RH harness connector B162 or B163 terminals 2, 3 and third row power folding seat control unit harness connector B401 terminals 3, 11.

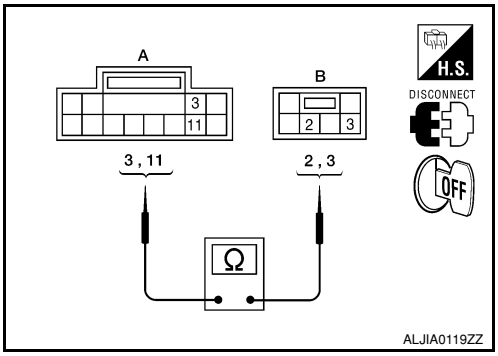

Terminals				Continuity
A		B		
Connector	Terminal	Connector	Terminal	
B401	3	B162 or B163	3	Yes
	11		2	

Is there continuity?

YES >> GO TO 5.
NO >> Repair circuits as necessary.

5. THIRD ROW POWER FOLDING SEAT MOTOR

Check operation of affected third row power folding seat motor. Refer to SE-22, "Third Row Power Folding Seat Motor".

Are inspection results normal?

YES >> GO TO 6.
NO >> Replace third row power folding seat motor. Refer to SE-60, "Exploded View".

6. CHECK CIRCUITS BETWEEN MOTOR AND CONTROL UNIT

Check continuity between third row power folding seat motor harness connector B403 or B426 terminals 3, 4 and third row power folding seat control unit terminals 17, 19 (LH) or 20, 22 (RH).

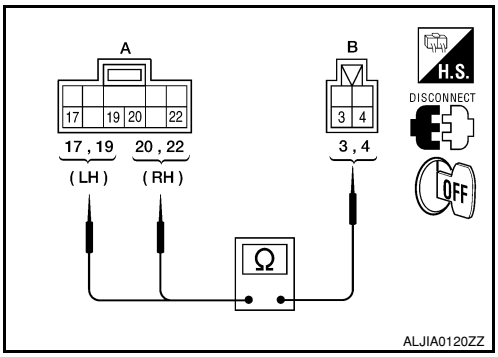

Terminals				Continuity
A		B		
Connector	Terminal	Connector	Terminal	
B402	17 (LH), 22 (RH)	B403 (LH) or B426 (RH)	3	Yes
	19 (LH), 20 (RH)		4	

Are inspection results normal?

YES >> Replace third row power folding seat control unit. Refer to SE-63, "Power seat cross beam".
NO >> Repair circuits as necessary.

THIRD ROW POWER FOLDING SEAT WILL OPERATE IN ONLY ONE DIRECTION.

Third Row Power Folding Seat Will Operate in Only One Direction

INFOID:0000000001536810

1. PRELIMINARY CHECK

Perform preliminary check. Refer to SE-5, "Preliminary Check".

Are inspection results normal?

YES >> GO TO 2.
NO >> Perform repairs as necessary.

2. THIRD ROW POWER FOLDING SEAT

Determine which seat is malfunctioning.

Is the affected seat the LH (60%) side?

YES >> GO TO 3.
NO >> GO TO 4.

3. THIRD ROW POWER FOLDING SEAT SWITCH LH

1. Turn ignition switch OFF.
2. Disconnect any third row power folding seat switch LH connector.
3. Check continuity between third row power folding seat switch LH harness connector B164 or B165 terminal 2, 3 and third row power folding seat control unit harness connector B401 terminals 4, 12.

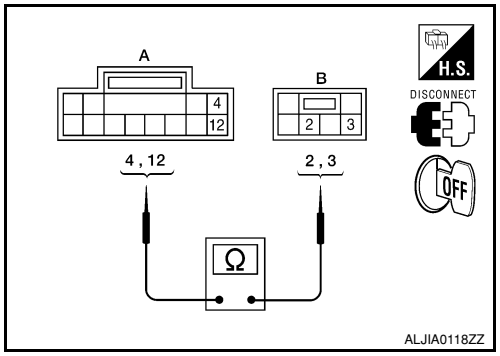

Terminals				Continuity
A		B		
Connector	Terminal	Connector	Terminal	
B401	4	B164 or B165	3	Yes
	12		2	

Is there continuity?

YES >> Replace third row power folding seat control unit. Refer to SE-63, "Power seat cross beam".
NO >> Repair circuits as necessary.

4. THIRD ROW POWER FOLDING SEAT SWITCH RH

1. Turn ignition switch OFF.
2. Disconnect either the front or rear third row power folding seat switch RH connector.
3. Check continuity between third row power folding seat switch RH harness connector B162 or B163 terminals 2, 3 and third row power folding seat control unit harness connector B401 terminals 3, 11.

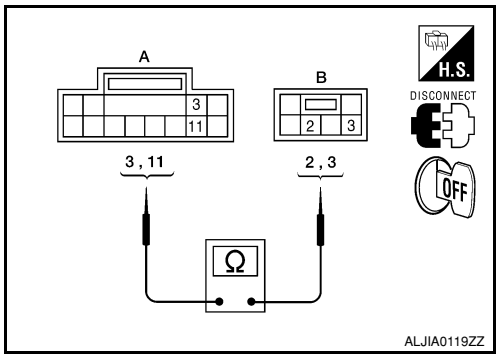

Terminals				Continuity
A		B		
Connector	Terminal	Connector	Terminal	
B401	3	B162 or B163	3	Yes
	11		2	

Is there continuity?

YES >> Replace third row power folding seat control unit. Refer to SE-63, "Power seat cross beam"
NO >> Repair circuits as necessary.

THIRD ROW POWER FOLDING SEAT WILL STOP SHORT OF IT'S FULLY UP OR DOWN POSITION.

Third Row Power Folding Seat Stops Short of its Fully Up or Down Position

INFOID:0000000001536813

1. PRELIMINARY CHECK

Perform preliminary check. Refer to SE-5, "Preliminary Check".

Are inspection results normal?

YES >> GO TO 2.
NO >> Perform repairs as necessary.

2. CHECK HISTORY

Check to see if a previous normal seat folding operation was interrupted due to low voltage condition.

Was voltage interrupted?

YES >> Perform learn procedure by operating affected seat until seat reaches full open/closed position.
NO >> GO TO 3.

3. THIRD ROW POWER FOLDING SEAT MOTOR

1. Turn ignition switch OFF.
2. Disconnect third row power folding seat motor harness connector and third row power folding seat control unit harness connector.
3. Check continuity between third row power folding seat motor harness connector B403 (LH) or B426 (RH) terminals 1, 2 and third row power folding seat control unit harness connector terminals 10, 15 (LH) or 9, 15 (RH).

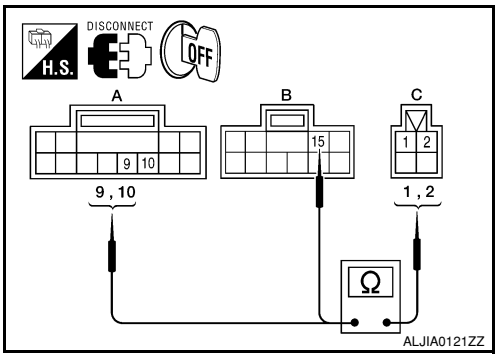

Terminals				Continuity
Connector	Terminal	Connector	Terminal	
A: B401	9 (RH)	C: B426 (RH)	2	Yes
	10 (LH)	C: B403 (LH)		
B: B402	15 (LH/RH)	C: B426 (RH)	1	
		C: B403 (LH)		

Is there continuity?

YES >> Replace affected third row power folding seat motor. Refer to SE-60, "Exploded View".
NO >> Repair circuits as necessary.

THIRD ROW POWER FOLDING SEAT MAKES EXCESSIVE NOISE WHILE MOVING.

Third Row Power Folding Seat Makes Excessive Noise While Moving

INFOID:0000000001536816

1. PRELIMINARY CHECK

Perform preliminary check. Refer to SE-5, "Preliminary Check".

Are inspection results normal?

YES >> Inspect shaft assembly for binding. If OK, replace affected third row power folding seat motor. Refer to SE-60, "Exploded View".

NO >> Perform repairs as necessary.

SQUEAK AND RATTLE TROUBLE DIAGNOSES

Work Flow

INFOID:0000000001306707

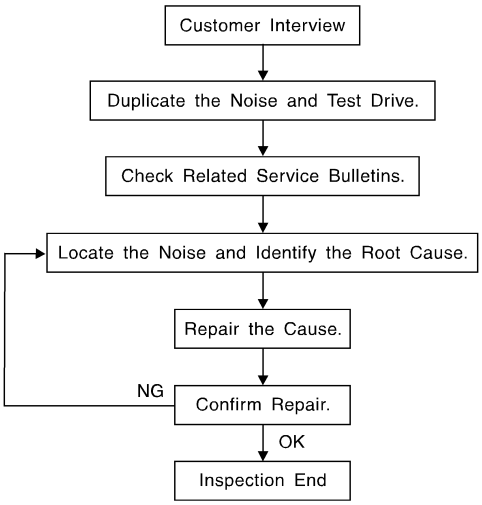

SBT842

CUSTOMER INTERVIEW

Interview the customer if possible, to determine the conditions that exist when the noise occurs. Use the Diagnostic Worksheet during the interview to document the facts and conditions when the noise occurs and any customer's comments; refer to SE-42, "Diagnostic Worksheet" . This information is necessary to duplicate the conditions that exist when the noise occurs.

- The customer may not be able to provide a detailed description or the location of the noise. Attempt to obtain all the facts and conditions that exist when the noise occurs (or does not occur).
- If there is more than one noise in the vehicle, be sure to diagnose and repair the noise that the customer is concerned about. This can be accomplished by test driving the vehicle with the customer.
- After identifying the type of noise, isolate the noise in terms of its characteristics. The noise characteristics are provided so the customer, service adviser and technician are all speaking the same language when defining the noise.
- Squeak —(Like tennis shoes on a clean floor)
  Squeak characteristics include the light contact/fast movement/brought on by road conditions/hard surfaces = higher pitch noise/softer surfaces = lower pitch noises/edge to surface = chirping.
- Creak—(Like walking on an old wooden floor)
  Creak characteristics include firm contact/slow movement/twisting with a rotational movement/pitch dependent on materials/often brought on by activity.
- Rattle—(Like shaking a baby rattle)
  Rattle characteristics include the fast repeated contact/vibration or similar movement/loose parts/missing clip or fastener/incorrect clearance.
- Knock —(Like a knock on a door)
  Knock characteristics include hollow sounding/sometimes repeating/often brought on by driver action.
- Tick—(Like a clock second hand)
  Tick characteristics include gentle contacting of light materials/loose components/can be caused by driver action or road conditions.
- Thump—(Heavy, muffled knock noise)
  Thump characteristics include softer knock/dead sound often brought on by activity.
- Buzz—(Like a bumble bee)
  Buzz characteristics include high frequency rattle/firm contact.
- Often the degree of acceptable noise level will vary depending upon the person. A noise that you may judge as acceptable may be very irritating to the customer.
- Weather conditions, especially humidity and temperature, may have a great effect on noise level.

DUPLICATE THE NOISE AND TEST DRIVE

If possible, drive the vehicle with the customer until the noise is duplicated. Note any additional information on the Diagnostic Worksheet regarding the conditions or location of the noise. This information can be used to duplicate the same conditions when you confirm the repair.

If the noise can be duplicated easily during the test drive, to help identify the source of the noise, try to duplicate the noise with the vehicle stopped by doing one or all of the following:

1) Close a door.
2) Tap or push/pull around the area where the noise appears to be coming from.
3) Rev the engine.
4) Use a floor jack to recreate vehicle “twist”.
5) At idle, apply engine load (electrical load, half-clutch on M/T model, drive position on A/T model).
6) Raise the vehicle on a hoist and hit a tire with a rubber hammer.

- Drive the vehicle and attempt to duplicate the conditions the customer states exist when the noise occurs.
- If it is difficult to duplicate the noise, drive the vehicle slowly on an undulating or rough road to stress the vehicle body.

CHECK RELATED SERVICE BULLETINS

After verifying the customer concern or symptom, check ASIST for Technical Service Bulletins (TSBs) related to that concern or symptom.
If a TSB relates to the symptom, follow the procedure to repair the noise.

LOCATE THE NOISE AND IDENTIFY THE ROOT CAUSE

1. Narrow down the noise to a general area.To help pinpoint the source of the noise, use a listening tool (Chassis Ear: J-39570, Engine Ear: J-39565 and mechanic's stethoscope).
2. Narrow down the noise to a more specific area and identify the cause of the noise by:

- removing the components in the area that you suspect the noise is coming from.
  Do not use too much force when removing clips and fasteners, otherwise clips and fasteners can be broken or lost during the repair, resulting in the creation of new noise.
- tapping or pushing/pulling the component that you suspect is causing the noise.
  Do not tap or push/pull the component with excessive force, otherwise the noise will be eliminated only temporarily.
- feeling for a vibration with your hand by touching the component(s) that you suspect is (are) causing the noise.
- placing a piece of paper between components that you suspect are causing the noise.
- looking for loose components and contact marks.
  Refer to SE-40, "Generic Squeak and Rattle Troubleshooting" .

REPAIR THE CAUSE

- If the cause is a loose component, tighten the component securely.
- If the cause is insufficient clearance between components:
- separate components by repositioning or loosening and retightening the component, if possible.
- insulate components with a suitable insulator such as urethane pads, foam blocks, felt cloth tape or urethane tape. A NISSAN Squeak and Rattle Kit (J-43980) is available through your authorized NISSAN Parts Department.

CAUTION:
Do not use excessive force as many components are constructed of plastic and may be damaged.
Always check with the Parts Department for the latest parts information.
The following materials are contained in the NISSAN Squeak and Rattle Kit (J-43980). Each item can be ordered separately as needed.
URETHANE PADS [1.5 mm (0.059 in) thick]
Insulates connectors, harness, etc.
76268-9E005: 100×135 mm (3.94×5.31 in)/76884-71L01: 60×85 mm (2.36×3.35 in)/76884-71L02: 15×25 mm (0.59×0.98 in)
INSULATOR (Foam blocks)
Insulates components from contact. Can be used to fill space behind a panel.
73982-9E000: 45 mm (1.77 in) thick, 50×50 mm (1.97×1.97 in)/73982-50Y00: 10 mm (0.39 in) thick, 50×50 mm (1.97×1.97 in)
INSULATOR (Light foam block)
80845-71L00: 30 mm (1.18 in) thick, 30×50 mm (1.18×1.97 in)
FELT CLOTH TAPE
Used to insulate where movement does not occur. Ideal for instrument panel applications.
68370-4B000: 15×25 mm (0.59×0.98 in) pad/68239-13E00: 5 mm (0.20 in) wide tape roll. The following materials not found in the kit can also be used to repair squeaks and rattles.
UHMW (TEFLON) TAPE
Insulates where slight movement is present. Ideal for instrument panel applications.

SILICONE GREASE
Used instead of UHMW tape that will be visible or not fit.
Note: Will only last a few months.
SILICONE SPRAY
Use when grease cannot be applied.
DUCT TAPE
Use to eliminate movement.

CONFIRM THE REPAIR

Confirm that the cause of a noise is repaired by test driving the vehicle. Operate the vehicle under the same conditions as when the noise originally occurred. Refer to the notes on the Diagnostic Worksheet.

Generic Squeak and Rattle Troubleshooting

INFOID:0000000001306708

Refer to Table of Contents for specific component removal and installation information.

INSTRUMENT PANEL

Most incidents are caused by contact and movement between:

1. The cluster lid A and instrument panel
2. Acrylic lens and combination meter housing
3. Instrument panel to front pillar garnish
4. Instrument panel to windshield
5. Instrument panel mounting pins
6. Wiring harnesses behind the combination meter
7. A/C defroster duct and duct joint

These incidents can usually be located by tapping or moving the components to duplicate the noise or by pressing on the components while driving to stop the noise. Most of these incidents can be repaired by applying felt cloth tape or silicone spray (in hard to reach areas). Urethane pads can be used to insulate wiring harness.

CAUTION:
Do not use silicone spray to isolate a squeak or rattle. If you saturate the area with silicone, you will not be able to recheck the repair.

CENTER CONSOLE

Components to pay attention to include:

1. Shifter assembly cover to finisher
2. A/C control unit and cluster lid C
3. Wiring harnesses behind audio and A/C control unit

The instrument panel repair and isolation procedures also apply to the center console.

DOORS

Pay attention to the:

1. Finisher and inner panel making a slapping noise
2. Inside handle escutcheon to door finisher
3. Wiring harnesses tapping
4. Door striker out of alignment causing a popping noise on starts and stops

Tapping or moving the components or pressing on them while driving to duplicate the conditions can isolate many of these incidents. You can usually insulate the areas with felt cloth tape or insulator foam blocks from the NISSAN Squeak and Rattle Kit (J-43980) to repair the noise.

TRUNK

Trunk noises are often caused by a loose jack or loose items put into the trunk by the owner.
In addition look for:

1. Trunk lid bumpers out of adjustment
2. Trunk lid striker out of adjustment
3. The trunk lid torsion bars knocking together
4. A loose license plate or bracket

Most of these incidents can be repaired by adjusting, securing or insulating the item(s) or component(s) causing the noise.

SUNROOF/HEADLINING

Noises in the sunroof/headlining area can often be traced to one of the following:

1. Sunroof lid, rail, linkage or seals making a rattle or light knocking noise
2. Sun visor shaft shaking in the holder
3. Front or rear windshield touching headliner and squeaking

Again, pressing on the components to stop the noise while duplicating the conditions can isolate most of these incidents. Repairs usually consist of insulating with felt cloth tape.

OVERHEAD CONSOLE (FRONT AND REAR)

Overhead console noises are often caused by the console panel clips not being engaged correctly. Most of these incidents are repaired by pushing up on the console at the clip locations until the clips engage.
In addition look for:

1. Loose harness or harness connectors.
2. Front console map/reading lamp lense loose.
3. Loose screws at console attachment points.

SEATS

When isolating seat noise it's important to note the position the seat is in and the load placed on the seat when the noise is present. These conditions should be duplicated when verifying and isolating the cause of the noise.
Cause of seat noise include:

1. Headrest rods and holder
2. A squeak between the seat pad cushion and frame
3. The rear seatback lock and bracket

These noises can be isolated by moving or pressing on the suspected components while duplicating the conditions under which the noise occurs. Most of these incidents can be repaired by repositioning the component or applying urethane tape to the contact area.

UNDERHOOD

Some interior noise may be caused by components under the hood or on the engine wall. The noise is then transmitted into the passenger compartment.
Causes of transmitted underhood noise include:

1. Any component mounted to the engine wall
2. Components that pass through the engine wall
3. Engine wall mounts and connectors
4. Loose radiator mounting pins
5. Hood bumpers out of adjustment
6. Hood striker out of adjustment

These noises can be difficult to isolate since they cannot be reached from the interior of the vehicle. The best method is to secure, move or insulate one component at a time and test drive the vehicle. Also, engine RPM or load can be changed to isolate the noise. Repairs can usually be made by moving, adjusting, securing, or insulating the component causing the noise.

Diagnostic Worksheet

INFOID:0000000001306709

Dear Customer:
We are concerned about your satisfaction with your vehicle. Repairing a squeak or rattle sometimes can be very difficult. To help us fix your vehicle right the first time, please take a moment to note the area of the vehicle where the squeak or rattle occurs and under what conditions. You may be asked to take a test drive with a service advisor or technician to ensure we confirm the noise you are hearing.

SQUEAK & RATTLE DIAGNOSTIC WORKSHEET

I. WHERE DOES THE NOISE COME FROM? (circle the area of the vehicle)
The illustrations are for reference only, and may not reflect the actual configuration of your vehicle.

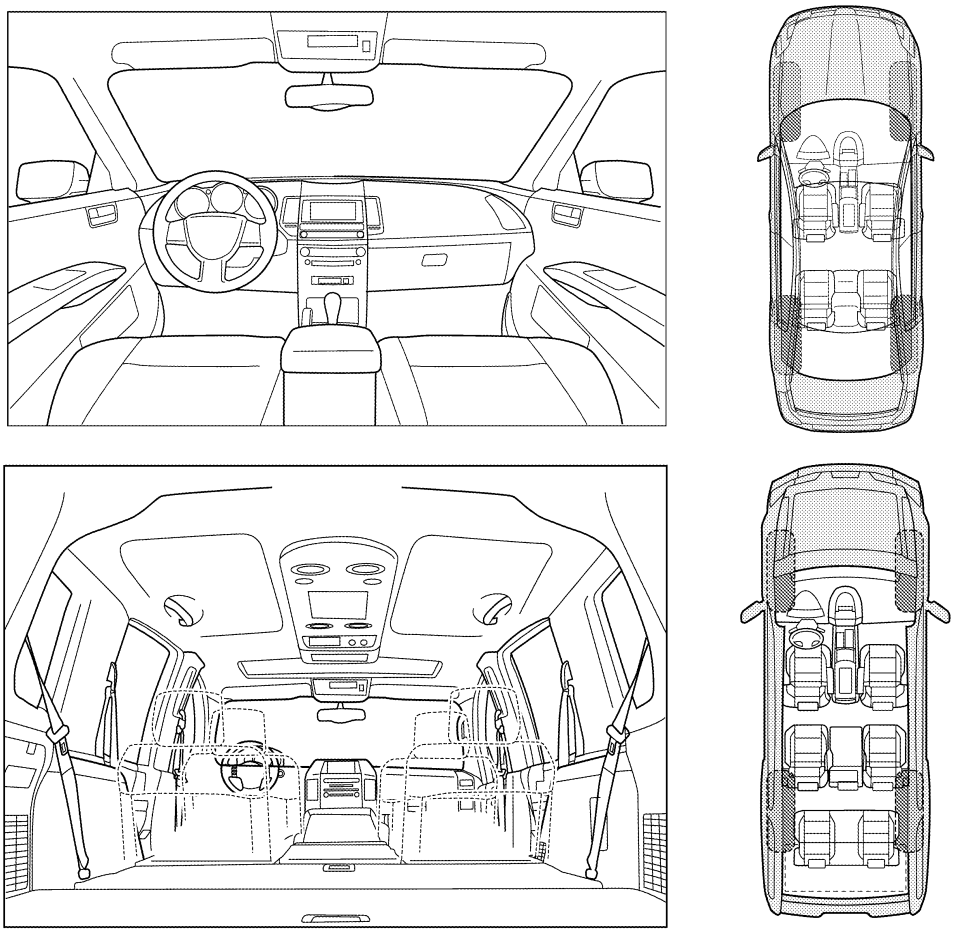

Continue to page 2 of the worksheet and briefly describe the location of the noise or rattle. In addition, please indicate the conditions which are present when the noise occurs.

-1-

LAIA0072E

SQUEAK & RATTLE DIAGNOSTIC WORKSHEET - page 2

Briefly describe the location where the noise occurs:

_____

_____

II. WHEN DOES IT OCCUR? (please check the boxes that apply)

- ☐ Anytime
- ☐ 1st time in the morning
- ☐ Only when it is cold outside
- ☐ Only when it is hot outside
- ☐ After sitting out in the rain
- ☐ When it is raining or wet
- ☐ Dry or dusty conditions
- ☐ Other:

III. WHEN DRIVING:

- ☐ Through driveways
- ☐ Over rough roads
- ☐ Over speed bumps
- ☐ Only about ____ mph
- ☐ On acceleration
- ☐ Coming to a stop
- ☐ On turns: left, right or either (circle)
- ☐ With passengers or cargo
- ☐ Other: _____
- ☐ After driving _____ miles or _____ minutes

IV. WHAT TYPE OF NOISE

- ☐ Squeak (like tennis shoes on a clean floor)
- ☐ Creak (like walking on an old wooden floor)
- ☐ Rattle (like shaking a baby rattle)
- ☐ Knock (like a knock at the door)
- ☐ Tick (like a clock second hand)
- ☐ Thump (heavy muffled knock noise)
- ☐ Buzz (like a bumble bee)

TO BE COMPLETED BY DEALERSHIP PERSONNEL

Test Drive Notes:

_____

_____

_____

	YES	NO	Initials of person performing
Vehicle test driven with customer	☐	☐	_____
- Noise verified on test drive	☐	☐	_____
- Noise source located and repaired	☐	☐	_____
- Follow up test drive performed to confirm repair	☐	☐	_____

LAIA0071E

VIN: _____ Customer Name _____

W.O.# _____ Date: _____

This form must be attached to Work Order

PRECAUTION

PRECAUTIONS

Precaution for Supplemental Restraint System (SRS) "AIR BAG" and "SEAT BELT PRE-TENSIONER"

INFOID:0000000001306703

The Supplemental Restraint System such as “AIR BAG” and “SEAT BELT PRE-TENSIONER”, used along with a front seat belt, helps to reduce the risk or severity of injury to the driver and front passenger for certain types of collision. This system includes seat belt switch inputs and dual stage front air bag modules. The SRS system uses the seat belt switches to determine the front air bag deployment, and may only deploy one front air bag, depending on the severity of a collision and whether the front occupants are belted or unbelted.
Information necessary to service the system safely is included in the SR and SB section of this Service Manual.

WARNING:

- **To avoid rendering the SRS inoperative, which could increase the risk of personal injury or death in the event of a collision which would result in air bag inflation, all maintenance must be performed by an authorized NISSAN/INFINITI dealer.**
- **Improper maintenance, including incorrect removal and installation of the SRS, can lead to personal injury caused by unintentional activation of the system. For removal of Spiral Cable and Air Bag Module, see the SR section.**
- **Do not use electrical test equipment on any circuit related to the SRS unless instructed to in this Service Manual. SRS wiring harnesses can be identified by yellow and/or orange harnesses or harness connectors.**

Precaution for Work

INFOID:0000000001306704

- When removing or disassembling each component, be careful not to damage or deform it. If a component may be subject to interference, be sure to protect it with a shop cloth.
- When removing (disengaging) components with a screwdriver or similar tool, be sure to wrap the component with a shop cloth or vinyl tape to protect it.
- Protect the removed parts with a shop cloth and keep them.
- Replace a deformed or damaged clip.
- If a part is specified as a non-reusable part, always replace it with new one.
- Be sure to tighten bolts and nuts securely to the specified torque.
- After re-installation is completed, be sure to check that each part works normally.
- Follow the steps below to clean components.
- Water soluble foul: Dip a soft cloth into lukewarm water, and wring the water out of the cloth to wipe the fouled area.
  Then rub with a soft and dry cloth.
- Oily foul: Dip a soft cloth into lukewarm water with mild detergent (concentration: within 2 to 3%), and wipe the fouled area.
  Then dip a cloth into fresh water, and wring the water out of the cloth to wipe the detergent off. Then rub with a soft and dry cloth.
- Do not use organic solvent such as thinner, benzene, alcohol, or gasoline.
- For genuine leather seats, use a genuine leather seat cleaner.

PREPARATION

PREPARATION

Special Service Tool

INFOID:0000000001306705

The actual shapes of Kent-Moore tools may differ from those of special service tools illustrated here.

Tool number (Kent-Moore No.) Tool name	Description
— (J-39570) Chassis ear 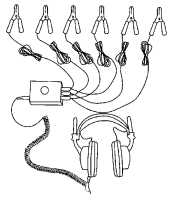 SIIA0993E	Locating the noise
— (J-43980) NISSAN Squeak and Rattle Kit 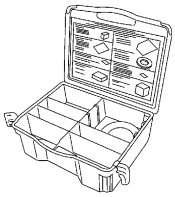 SIIA0994E	Repairing the cause of noise

Commercial Service Tool

INFOID:0000000001306706

(Kent-Moore No.) Tool name	Description
(J-39565) Engine ear 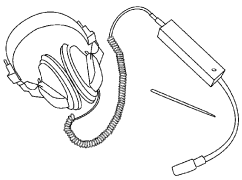 SIIA0995E	Locating the noise

ON-VEHICLE REPAIR

FRONT SEAT

Exploded View

INFOID:0000000001315915

Driver Seat

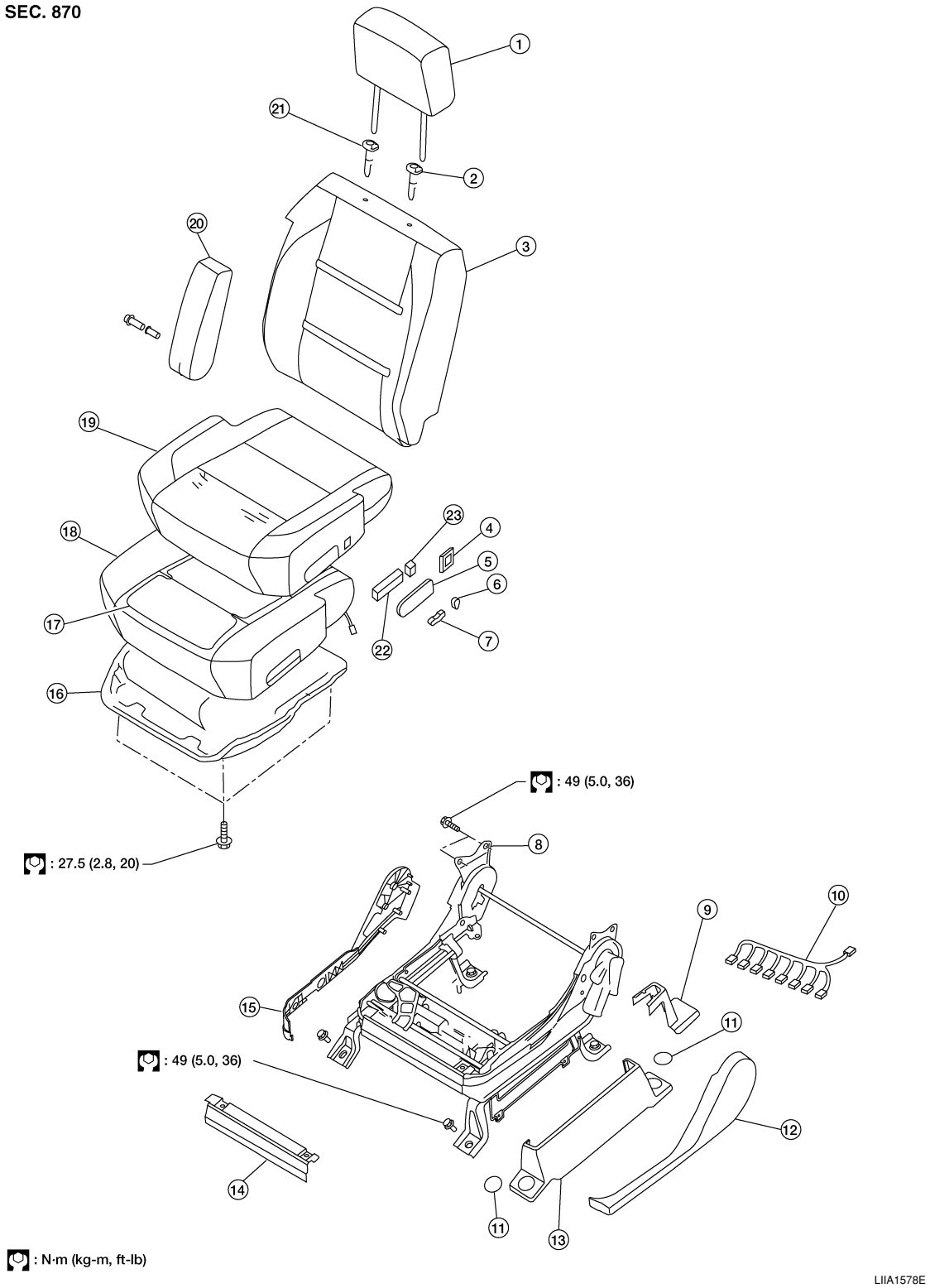

1. Headrest
2. Headrest holder with multi-position lock
3. Seatback assembly
4. Lumbar switch bezel
5. Power seat switch escutcheon
6. Recliner switch knob
7. Slide switch knob
8. Driver power seat frame assembly
9. LH outer leg cover
10. Driver seat wiring harness
11. Bolt cover
12. Seat cushion outer finisher
13. Outer pedestal finisher
14. Seat cushion front finisher
15. Seat cushion inner finisher
16. Seat cushion frame
17. Seat cushion heating element
18. Seat cushion pad
19. Seat cushion trim cover
20. Armrest assembly
21. Headrest holder
22. Seat slide/ recline switch
23. Lumbar switch

Passenger Seat

SEC. 870

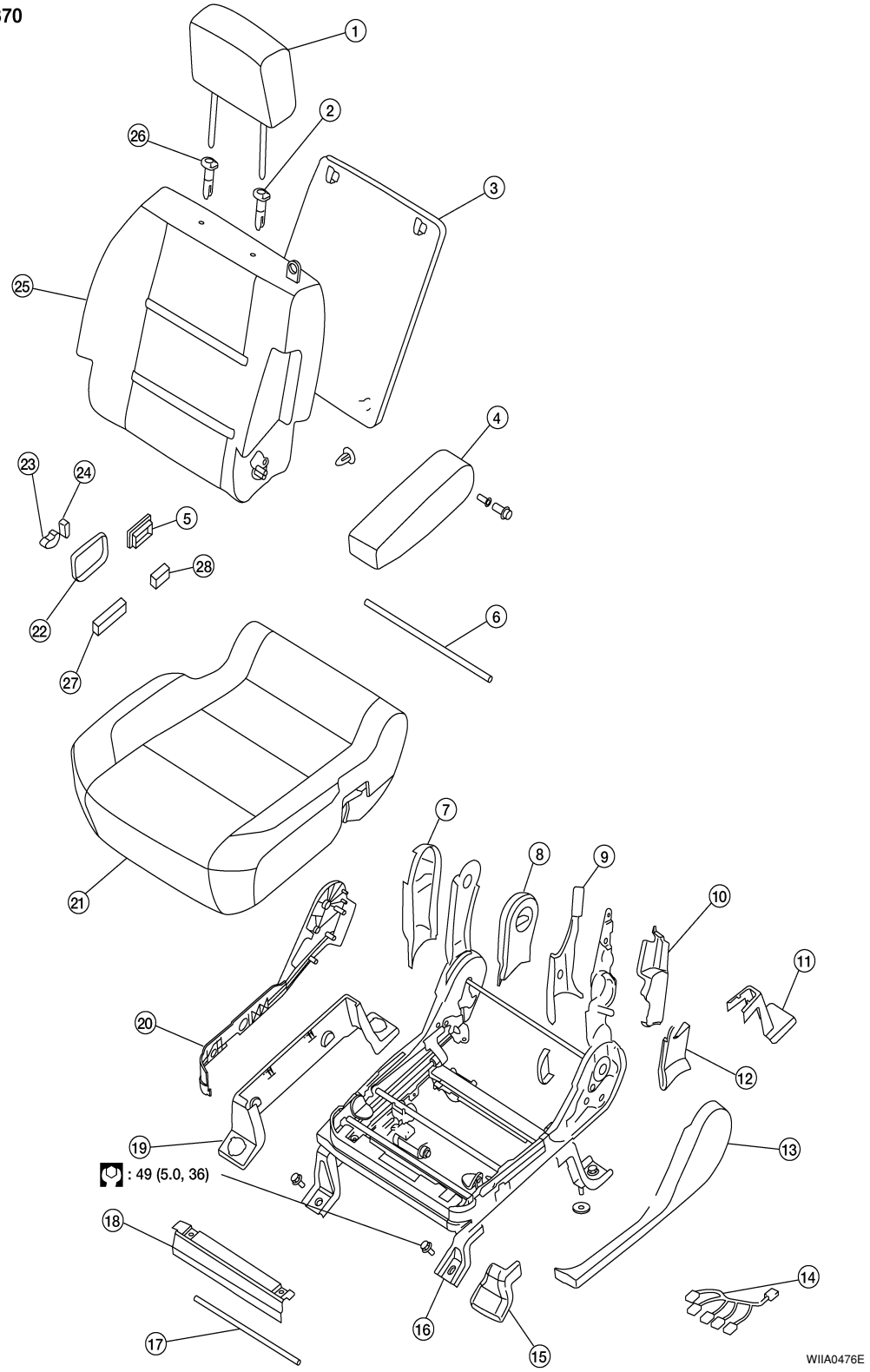

1. Headrest	2. Headrest holder with multi-position lock	3. Seatback board
4. Armrest assembly	5. Lumbar switch bezel	6. Fold flat link bar
7. Outboard reclining arm outer cover	8. Outboard reclining arm inner cover	9. Inboard reclining arm inner cove
10. Latch cover	11. LH outer leg cover	12. Outboard reclining arm inner cover
13. Seat cushion inner cover	14. Passenger seat wiring harness	15. Inner front leg cover
16. Power seat frame assembly	17. NVH assembly	18. Seat cushion front finisher

19. Outer pedestal finisher
20. Seat cushion outer finisher
21. Seat cushion assembly
22. Power seat switch escutcheon
23. Slide switch knob
24. Recliner switch knob
25. Seatback assembly
26. Headrest holder
27. Seat slide/ recline switch
28. Power lumbar switch

Removal and Installation

INFOID:0000000001306761

REMOVAL

CAUTION:

- **When removing or installing the seat trim, handle it carefully to keep dirt out and avoid damage.**
- **Before removing the front seat, turn the ignition switch off, disconnect both battery cables and wait at least 3 minutes.**
- **When checking the power seat circuit for continuity using a circuit tester, do not confuse its connector with the side air bag module connector. Such an error may cause the air bag to deploy.**
- **Do not drop, tilt, or bump the side air bag module while installing the seat. Always handle it with care.**
- **After front side air bag module inflates, front seatback assembly must be replaced.**
- **Front passenger seat is equipped with an Occupant Classification System sensor and control module. Do not disassemble front passenger seat cushion assembly or remove the trim as this will affect the Occupant Classification System calibration.**
- **Always replace passenger seat cushion as an assembly.**

1. Slide the seat until the four body mounting bolts are visible and a tool can be inserted.
   NOTE:
   - If disassembling the seat after removal, set the front/rear cushion lifters to the top position.
2. Disconnect both battery cables and wait at least 3 minutes.
3. Disconnect the side air bag module harness connector.
4. Remove the four body mounting bolts.
5. Disconnect the power seat harness connectors and remove the seat from the vehicle.
   NOTE:
   When removing and installing the seat, use shop cloths to protect the vehicle from damage.

INSTALLATION

Installation is in the reverse order of removal.

SECOND SEAT

Exploded View

INFOID:0000000001315916

Second Row RH

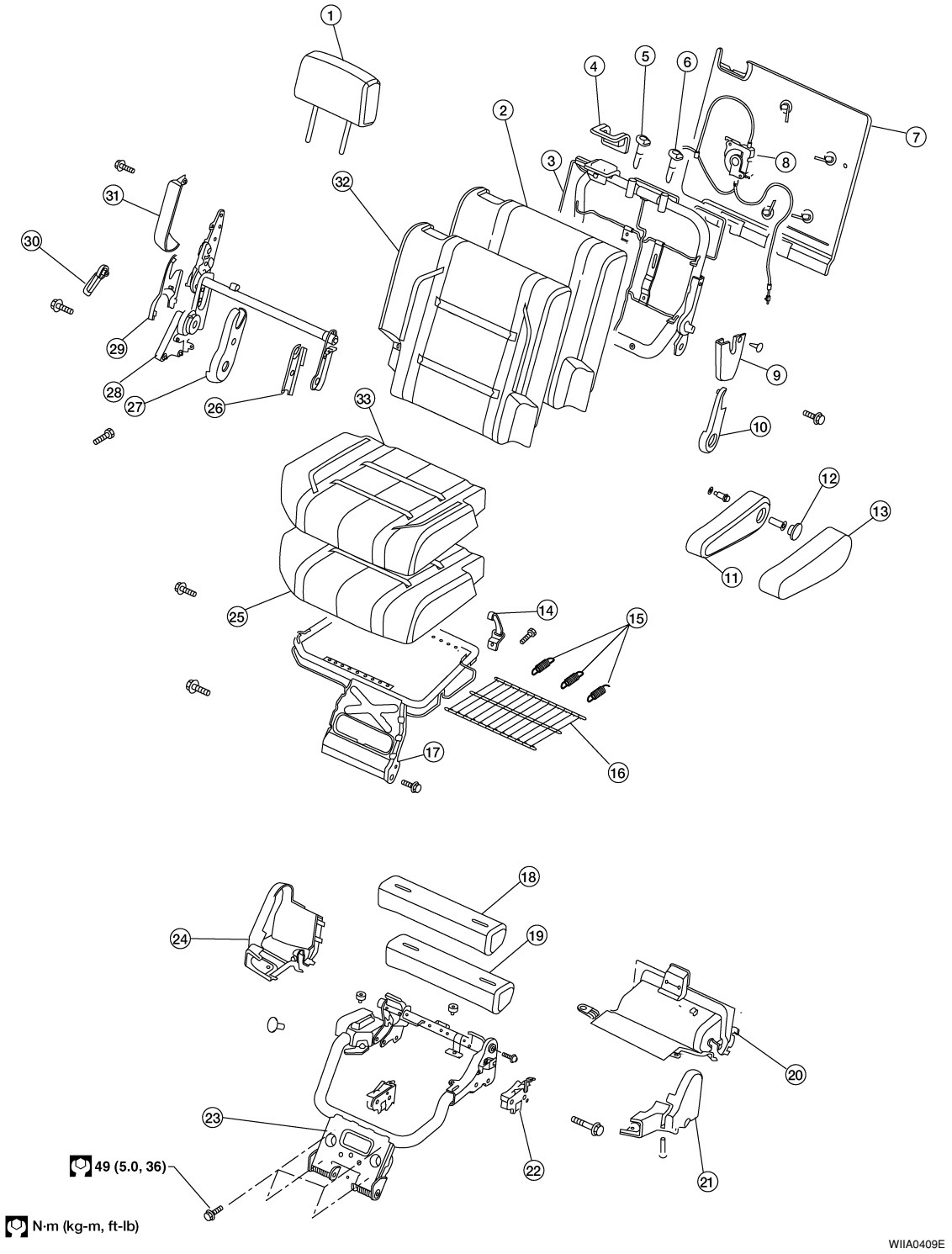

1. Headrest
2. Seatback pad
3. Seatback frame
4. Rear seat bezel
5. RH Headrest guide
6. LH Headrest guide
7. Seat back panel
8. Seat actuator assembly
9. Reclining device inner cover

10. Reclining device inner mid cover	11. Armrest assembly	12. Armrest bolt cover
13. Armrest trim cover	14. Latch assembly	15. Seat cushion mat springs
16. Seat cushion mat	17. Seat cushion frame assembly	18. Seat support trim cover
19. Seat support pad assembly	20. Lower rear seat cover	21. Lower rear seat cover inner
22. Outboard cushion floor latch	23. Seat cushion support frame assembly	24. Lower rear seat cover outer
25. Seat cushion pad	26. Inner inboard reclining device cover	27. Outer inboard reclining device cover
28. Seat latch and recliner release	29. Reclining device outer mid cover	30. Reclining device lever
31. Reclining device outer cover	32. Seatback trim cover	33. Seat cushion trim cover

Second row LH

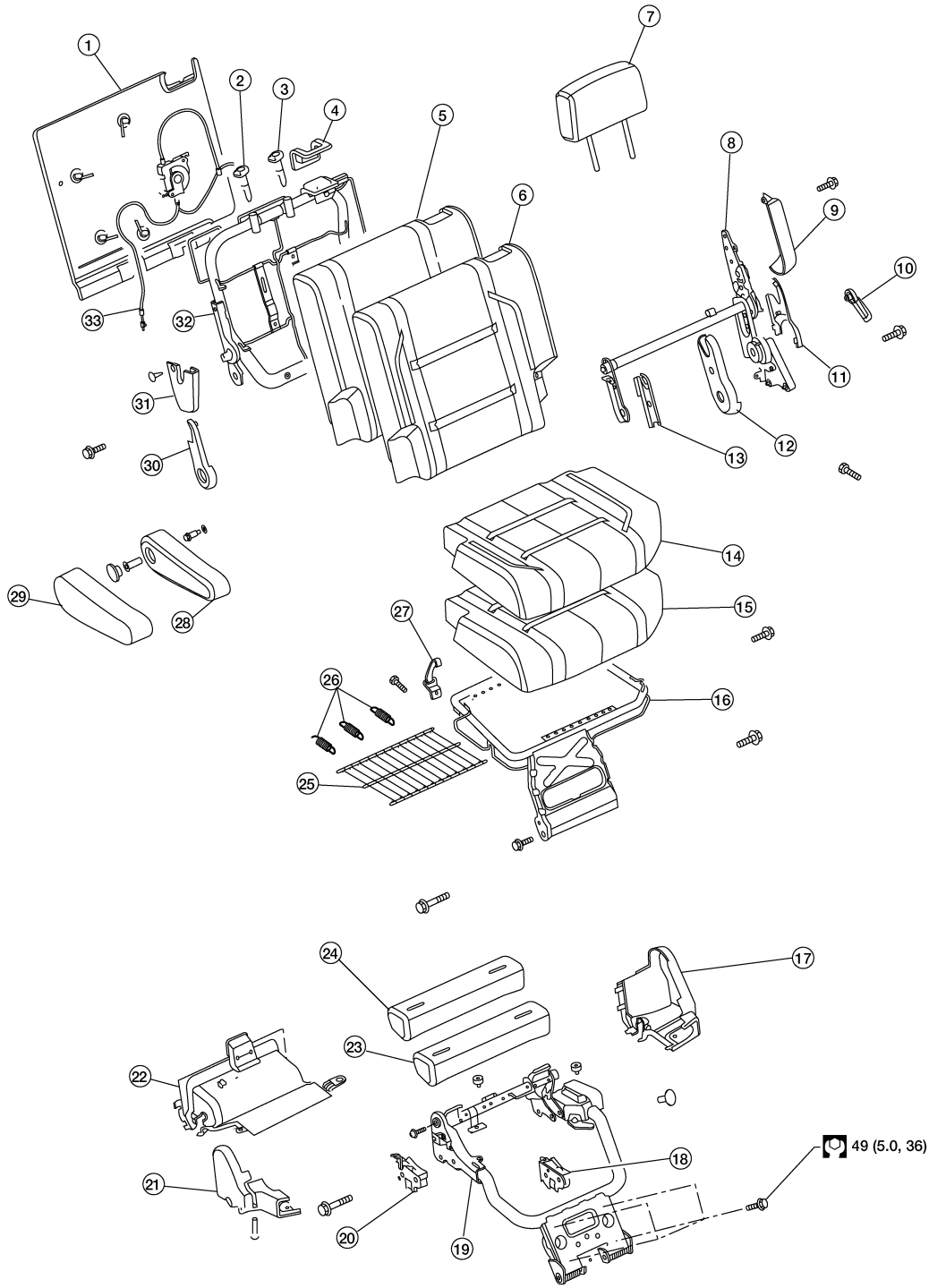

N·m (kg-m, ft-lb)

WIIA0411E

1. Seatback panel
2. RH headrest guide
3. LH headrest guide
4. Rear seat bezel
5. Seatback pad
6. Seatback trim cover
7. Headrest
8. Seat latch and recliner release
9. Reclining device outer cover
10. Reclining device lever
11. Reclining device outer mid cover
12. Outer inboard reclining device cover
13. Inner inboard reclining device cover
14. Seat cushion trim cover
15. Seat cushion pad
16. Seat cushion frame assembly
17. Lower rear seat cover outer
18. Outboard cushion floor latch

19. Seat cushion support frame assembly
20. Inboard cushion floor latch
21. Lower rear seat cover inner
22. Lower rear seat cover
23. Seat support pad assembly
24. Seat support trim cover
25. Seat cushion mat
26. Seat cushion mat springs
27. Latch assembly
28. Armrest assembly
29. Armrest trim cover
30. Reclining device outer cover
31. Reclining device inner mid cover
32. Seatback frame
33. Seat actuator assembly

Second row center

SEC. 861

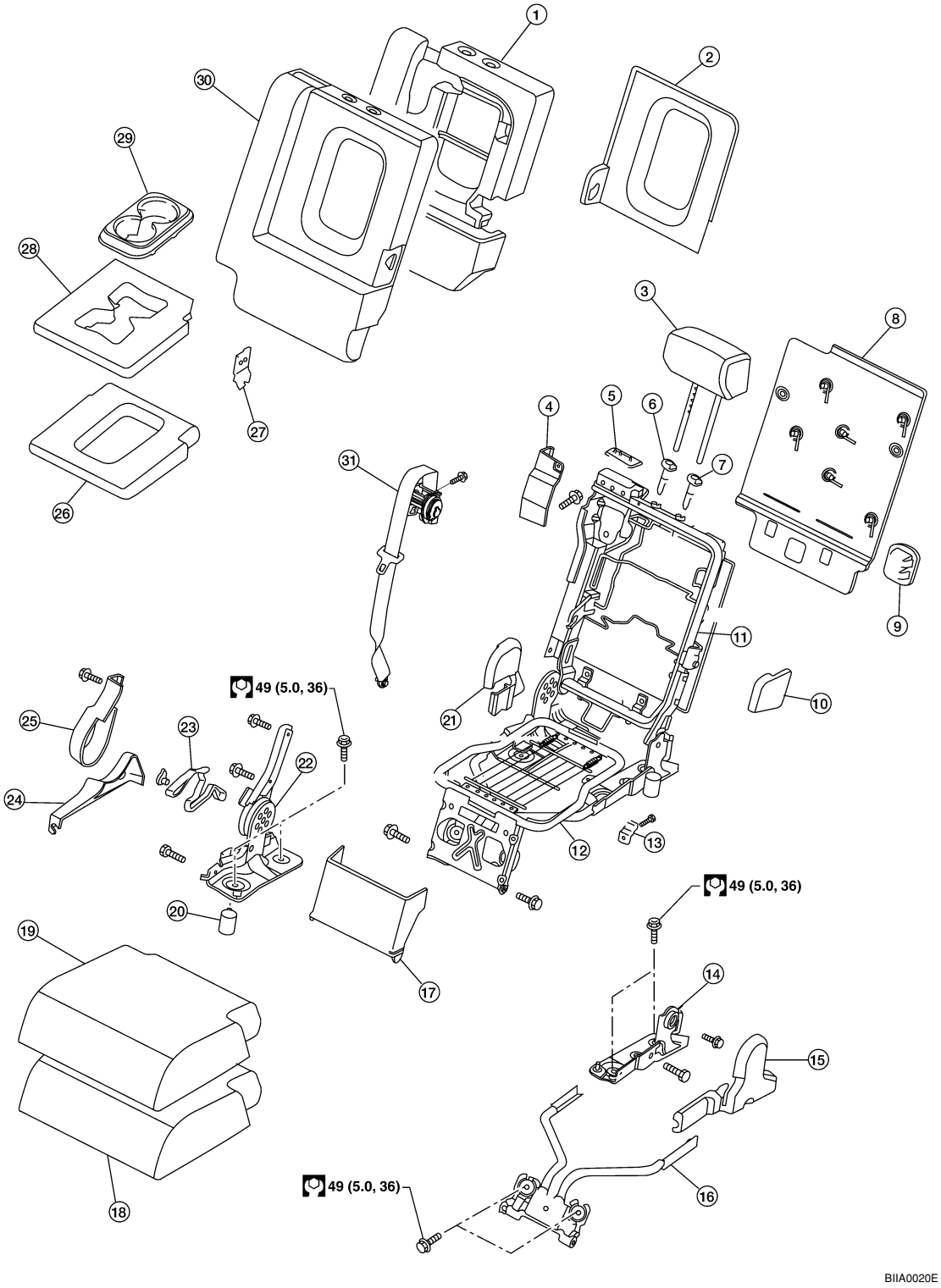

1. Seatback pad
2. Armrest finisher
3. Headrest
4. Seat belt retractor cover
5. Seat belt bezel
6. RH headrest guide locking
7. LH headrest guide free
8. Seatback board
9. Seat bracket cover
10. Armrest pivot bracket cover
11. Seatback frame
12. Seat cushion frame
13. Latch assembly
14. Lower rear pivot bracket support
15. Outer hinge cover
16. Center seat base assembly
17. Link and pivot bracket apron
18. Seat cushion pad
19. Seat cushion trim cover
20. Cushion stop bumper
21. Inner lever cover
22. Seat hinge assembly
23. Seat lever assembly
24. Outer lever cover
25. Seat lock cover
26. Armrest cover
27. Armrest bracket
28. Armrest pad
29. Cup holder
30. Seatback trim cover
31. Seat belt assembly

Second Row Outboard

INFOID:0000000001306763

REMOVAL

1. Remove seat base trim cover.
2. Lift handle and tilt seat forward.
3. Remove seat anchor nuts, bolts and seat assembly.

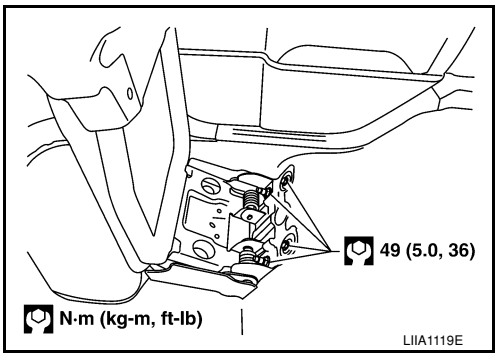

INSTALLATION

Installation is in the reverse order of removal.

Second Row Center

INFOID:0000000001306764

REMOVAL

1. Tilt the seat cushion forward.
2. Remove the seat anchor bolts.
3. Tilt the seat cushion back and remove the seat.

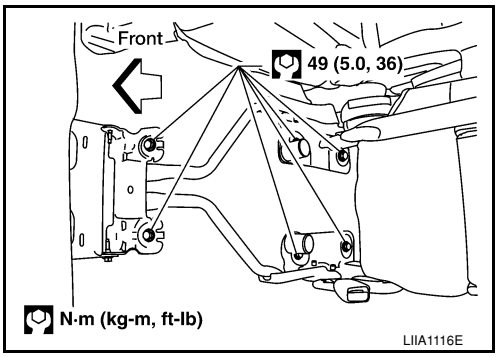

INSTALLATION

Installation is in the reverse order of removal.

THIRD SEAT

W/O Power Folding

INFOID:0000000001315922

Exploded View

INFOID:0000000001315917

Third seat LH

SEC. 882

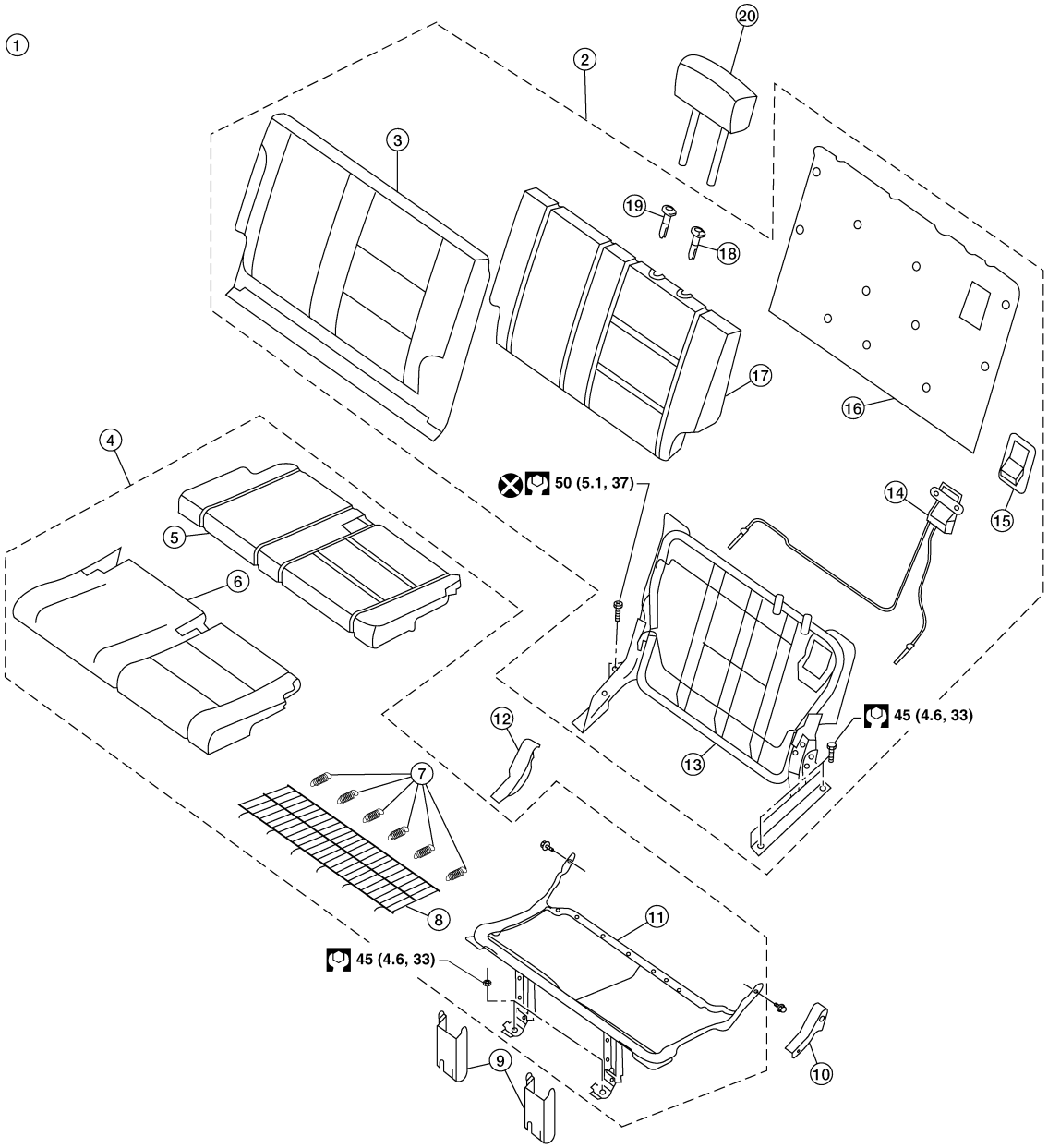

LIIA2322E

1. LH third seat assembly
2. Seatback assembly
3. Seatback trim cover
4. Seat cushion assembly
5. Seat cushion pad
6. Seat cushion trim cover
7. Flex mat springs
8. Flex mat
9. Front link covers
10. RH hinge cover
11. Seat cushion frame
12. LH hinge cover
13. Seatback frame assembly
14. Seatback cable assembly
15. Release handle bezel
16. Seatback board
17. Seatback pad
18. Headrest holder, locking
19. Headrest holder, free
20. Headrest

Third seat RH

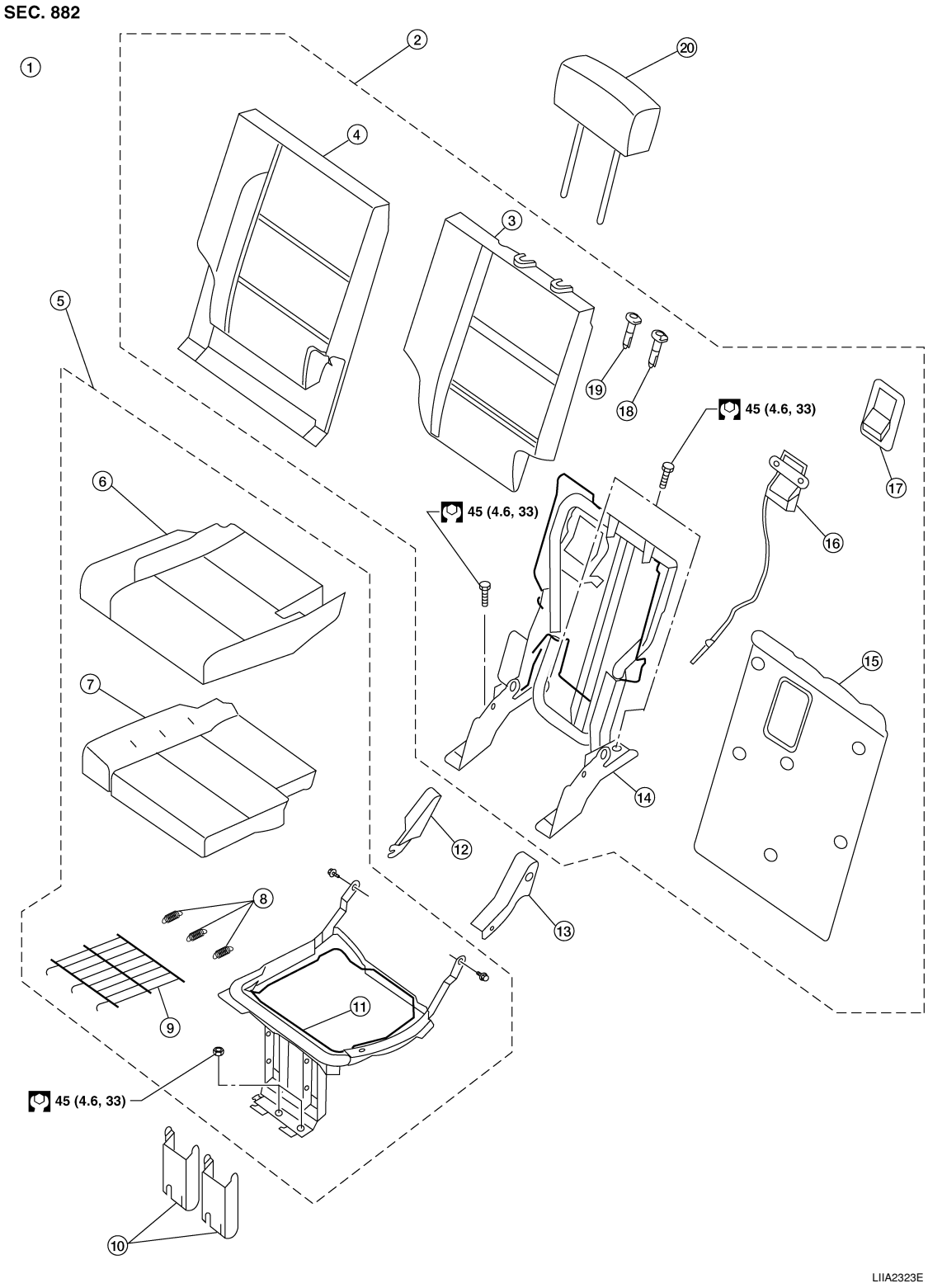

1. RH third seat assembly
2. Seatback assembly
3. Seatback pad
4. Seatback trim cover
5. Seat cushion assembly
6. Seat cushion trim cover
7. Seat cushion pad
8. Flex mat springs
9. Flex mat
10. Front link covers
11. Seat cushion frame
12. RH hinge cover
13. LH hinge cover
14. Seatback frame assembly
15. Seatback board
16. Seatback cable assembly
17. Release handle bezel
18. Headrest holder, locking
19. Headrest holder, free
20. Headrest

LH Side Seat

INFOID:0000000001308907

REMOVAL

1. Remove the storage bin. Refer to INT-18.
2. Remove the lower base trim covers.
3. Remove front link nuts and the LH hinge front bolt.

Front link nuts : 45 N·m (4.6 Kg-m, 33 ft-lb)
LH hinge front bolt : 45 N·m (4.6 Kg-m, 33 ft-lb)

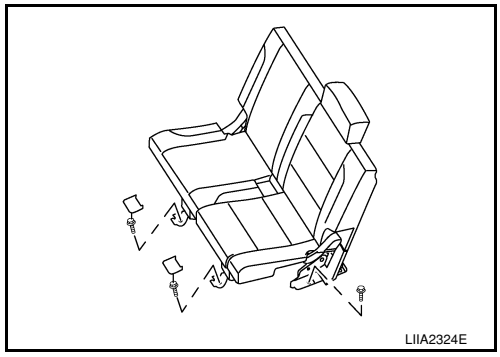

4. Remove push pin (2) and release elastic band (3) from seat frame (1).
   - ⇐: Vehicle front

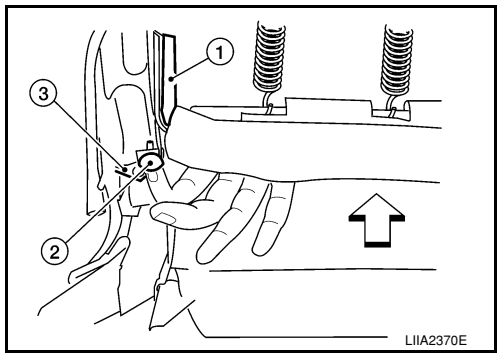

5. Partially lift seatback upright, then remove seat belt buckle (2) from between hinge cover (1) and seat cushion side facing (3).
   - ⇐: Vehicle front

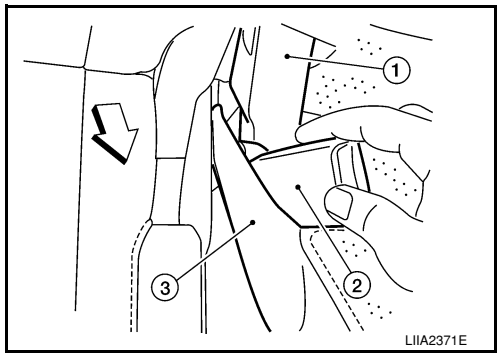

6. Retract the seat into the cargo floor position.
7. Remove the seat hinge rear bolt (A) and seat belt buckle bolt (B) from the seat assembly.

Seat hinge rear bolt : 45 N·m (4.6 Kg-m, 33 ft-lb)
Seat belt buckle bolt : 50 N·m (5.1 Kg-m, 37 ft-lb)

CAUTION:
Discard the seat belt buckle bolt and use a new bolt for installation.

8. Remove the seat assembly.

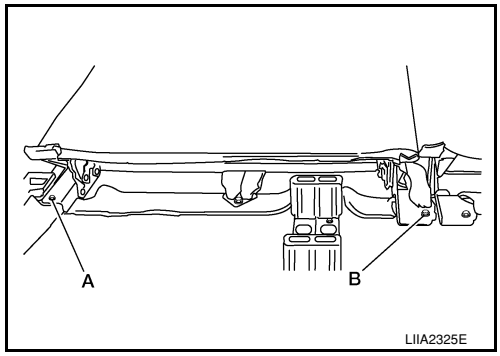

INSTALLATION

Installation is in the reverse order of removal.

RH Side Seat

INFOID:0000000001308908

REMOVAL

1. Remove the storage bin. Refer to INT-18.
2. Remove the lower base trim covers.
3. Remove front link nuts (A) and RH hinge front bolt (B).

Front link nuts : 45 N·m (4.6 Kg-m, 33 ft-lb)
RH hinge front bolt : 45 N·m (4.6 Kg-m, 33 ft-lb)

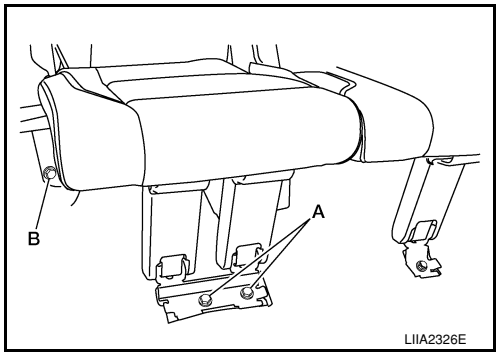

4. Remove push pin (2) and release elastic band (3) from seat frame (1).
   - ⇐: Vehicle front

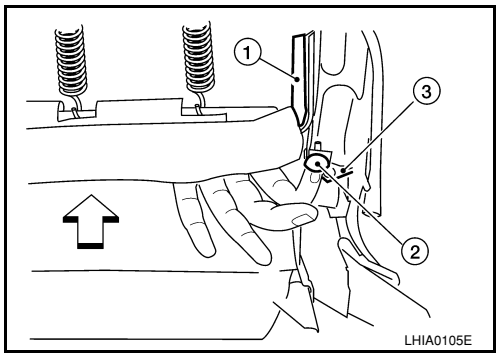

5. Partially lift seatback upright, then remove seat belt buckle (2) from between hinge cover (1) and seat cushion side facing (3).
   - ⇐: Vehicle front
6. Retract the seat into the cargo floor position.

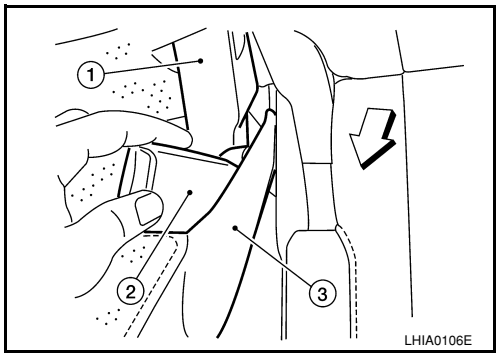

7. Remove the rear bolts from the seat assembly.

Seat hinge rear bolt : 45 N·m (4.6 Kg-m, 33 ft-lb)

8. Remove the seat assembly.

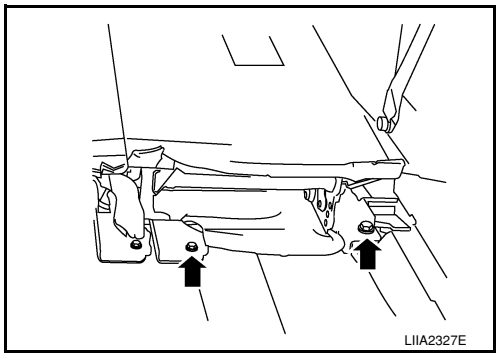

INSTALLATION

Installation is in the reverse order of removal.

Power Folding

INFOID:0000000001315923

Exploded View

INFOID:0000000001315926

Third seat RH

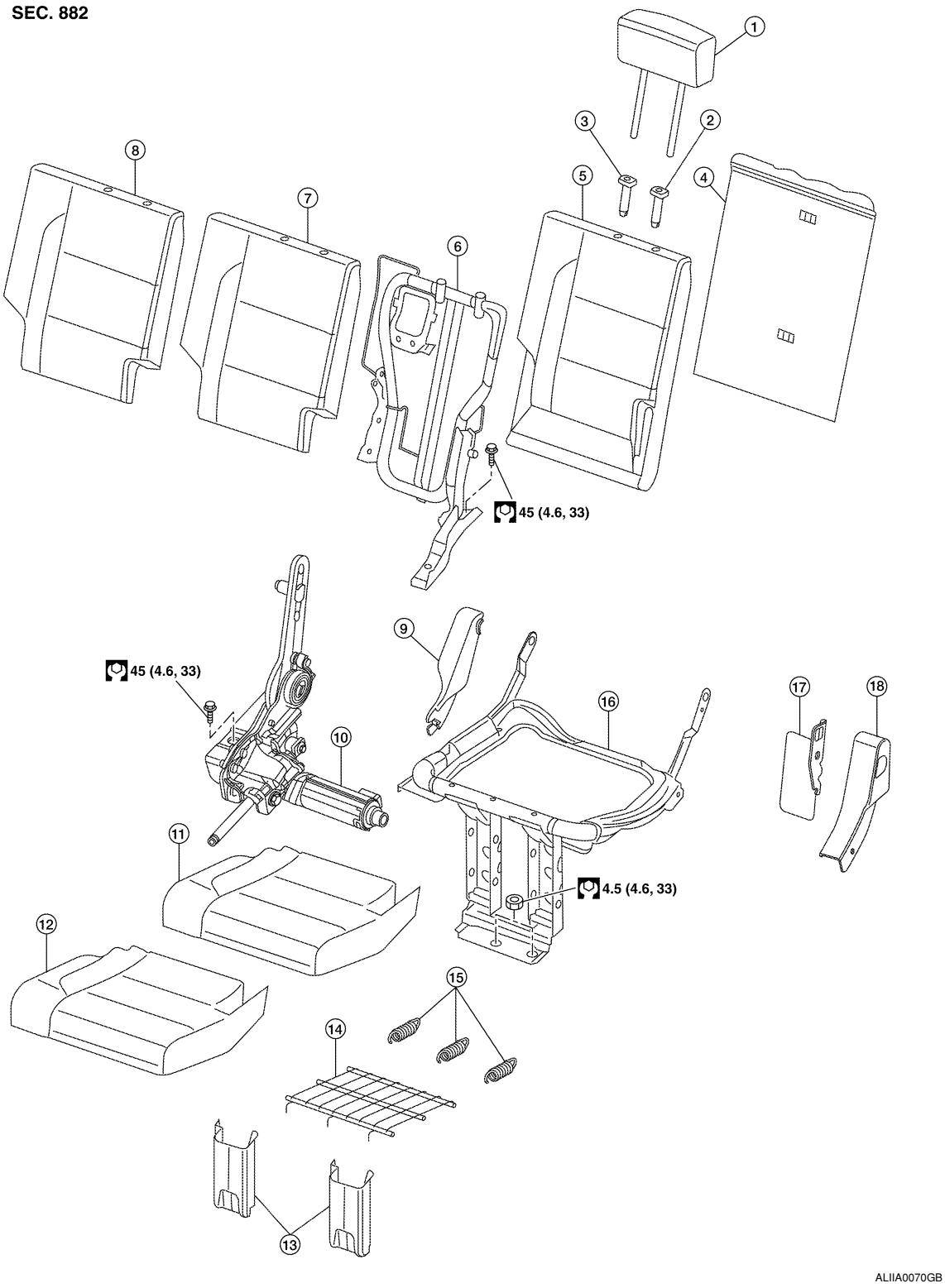

1. Headrest
2. Headrest holder, locking
3. Headrest holder, free
4. Seatback board
5. Seatback pad
6. Seatback frame assembly
7. Seatback cushion
8. Seatback trim cover
9. RH hinge cover

10. Seat motor/hinge assembly
11. Seat cushion
12. Seat cushion trim cover
13. Front link covers
14. Flex mat
15. Flex mat springs
16. Seat cushion frame assembly
17. Side link cover
18. LH hinge cover

Third seat LH

SEC. 882

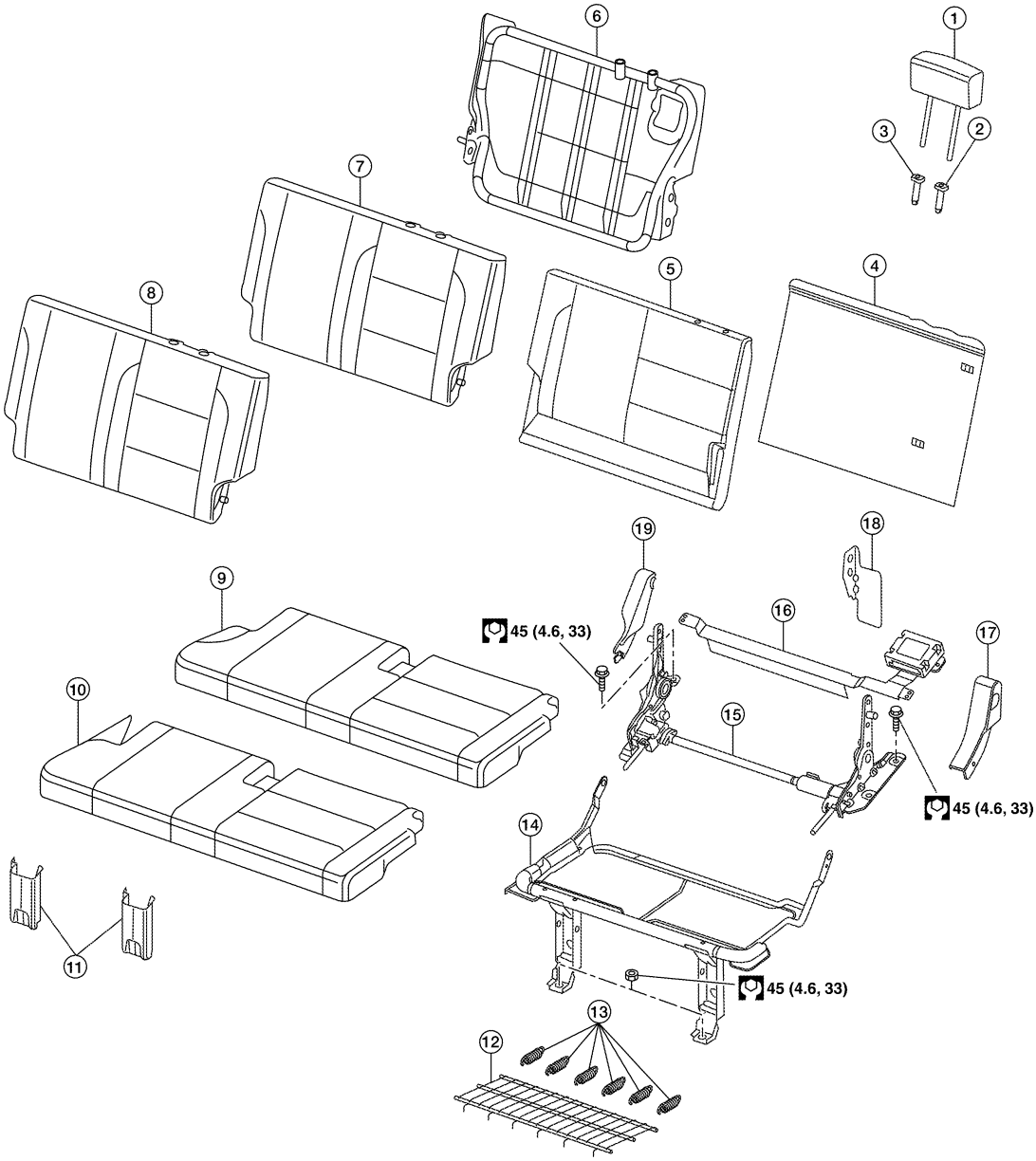

ALIIA0071GB

1. Headrest
2. Headrest holder, locking
3. Headrest holder, free
4. Seatback board
5. Seatback pad
6. Seatback frame assembly
7. Seatback cushion
8. Seatback trim cover
9. Seat cushion

10. Seat cushion trim cover
11. Front link covers
12. Flex mat
13. Flex mat springs
14. Seat cushion frame assembly
15. Seat motor/hinge assembly
16. Control module/cross beam assembly
17. LH hinge cover
18. Side link cover
19. RH hinge cover

LH Side Seat

INFOID:0000000001315924

REMOVAL

1. Remove the storage bin. Refer to INT-18.
2. Remove the lower base trim covers.
3. Remove front link nuts and the LH hinge front bolt.

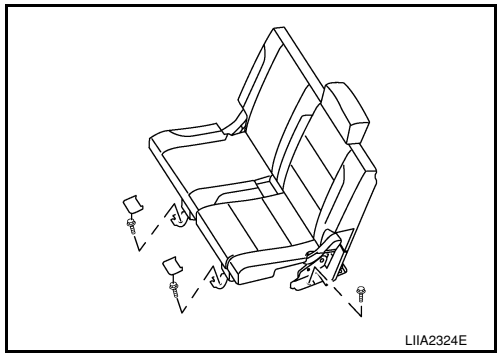

4. Remove push pin (2) and release elastic band (3) from seat frame (1).
   - ⇐: Vehicle front

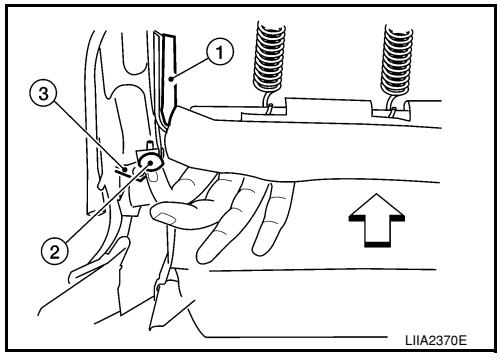

5. Partially lift seatback upright, then remove seat belt buckle (2) from between hinge cover (1) and seat cushion side facing (3).
   - ⇐: Vehicle front

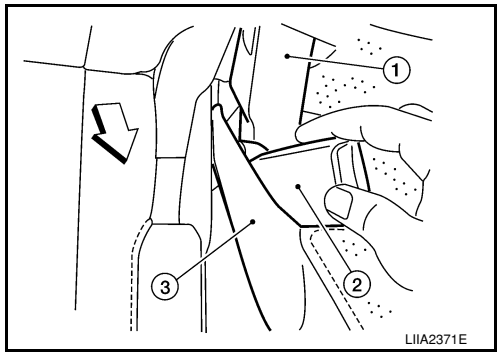

6. Retract the seat into the cargo floor position.

7. Remove the seat hinge rear bolt (A) and seat belt buckle bolt (B) from the seat assembly.

   Seat belt buckle bolt : Refer to XXXX

   CAUTION:
   Discard the seat belt buckle bolt and use a new bolt for installation.
8. Disconnect the seat harness.
9. Remove the seat assembly.

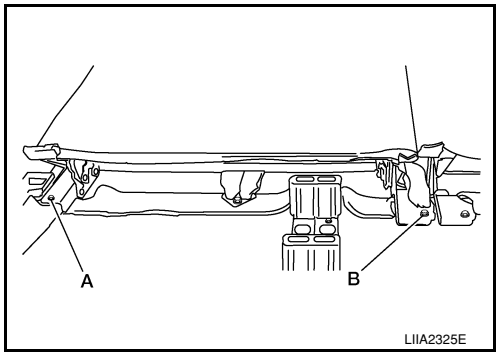

INSTALLATION

Installation is in the reverse order of removal.

Power seat cross beam

INFOID:0000000001534226

REMOVAL

1. Remove the lower seat mount bolts.
2. Fold the seat cushion up.

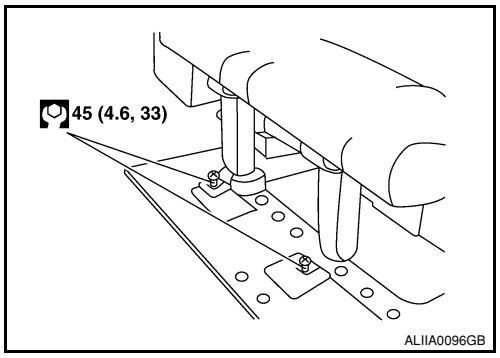

3. Remove the harness connectors from the seat control unit.

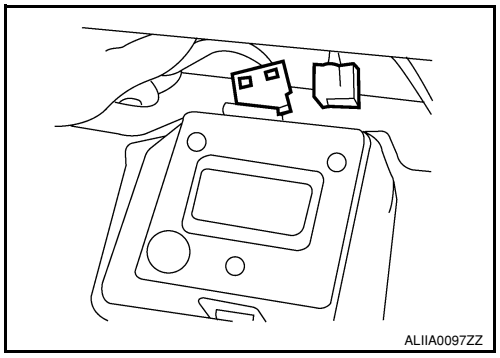

4. Press the front release tab and remove the seat crontrol unit.

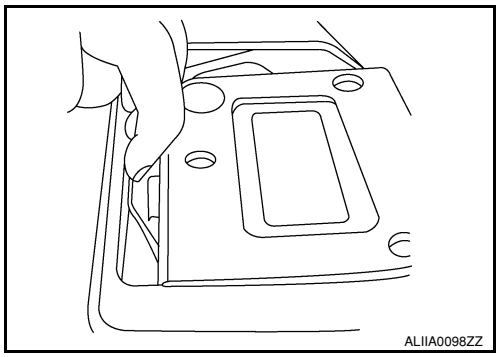

5. Remove the screws (2) from the power seat motor cover assembly.

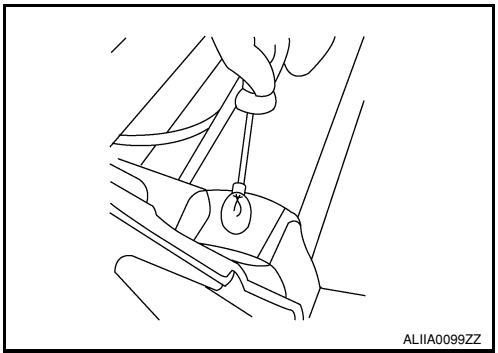

6. Disconnect the wiring harness from the power seat motor cover clips.
7. Remove the power seat motor cover.

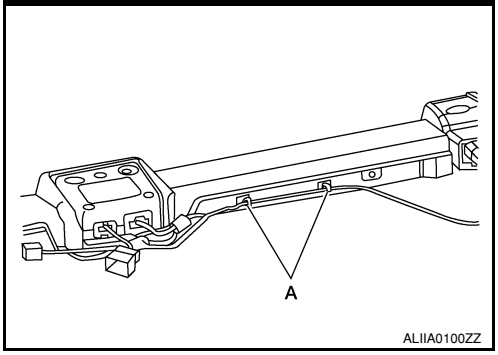

8. Release the power motor cross-beam clip (A) and open the hinged strap.

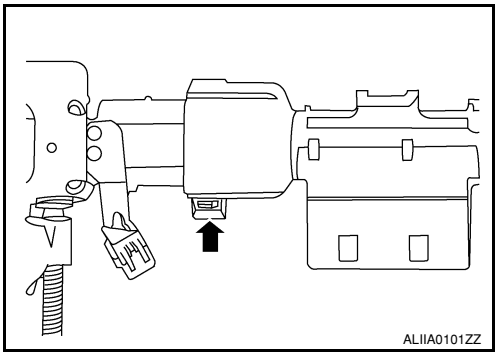

9. Remove the power motor cross-beam screws.

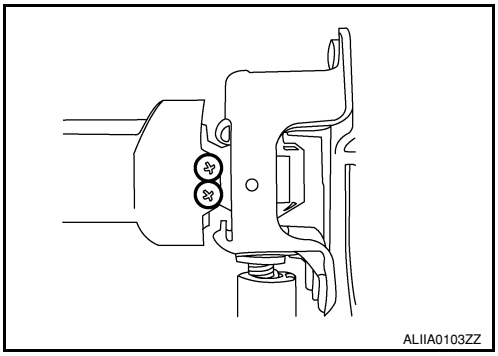

10. Remove the power motor cross-beam.
    NOTICE:
    The cable and conduit will be removed with the cross-beam.
11. Remove the cable and conduit from the cross-beam retainers.

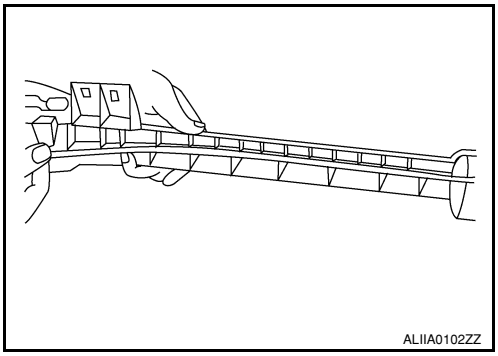

Installation

1. Install the cable into the drive motor and slide the conduit on the motor ferrule.

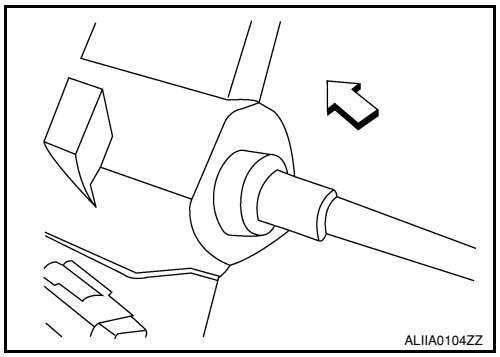

2. Install the cable (A) into the RH seat motor.

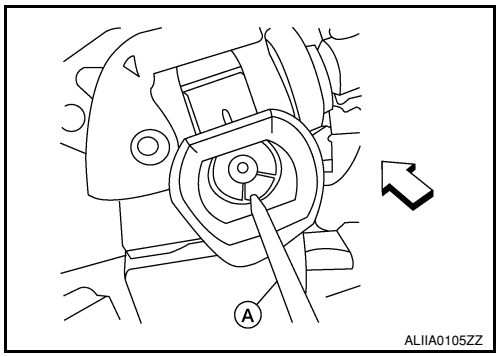

3. Install the power motor cross-beam right side screws

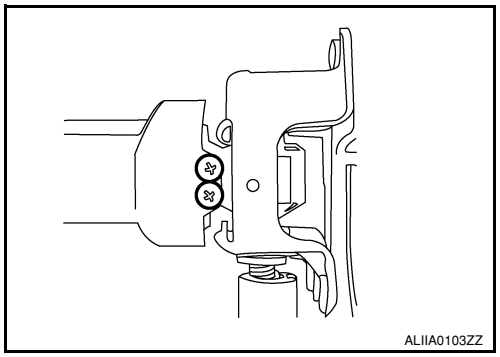

4. Starting at the right side, snap the cable and conduit into the power seat cross-beam retainers.

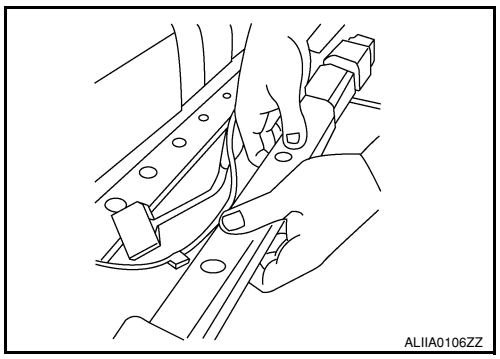

5. Snap the hinged strap retainer around the motor assembly.

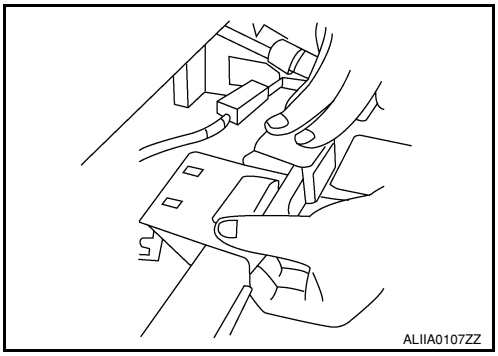

6. Replace the power seat motor cover.

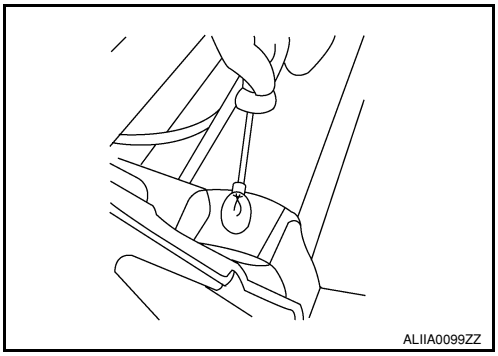

7. Install the seat harness to the power seat motor cover connectors.

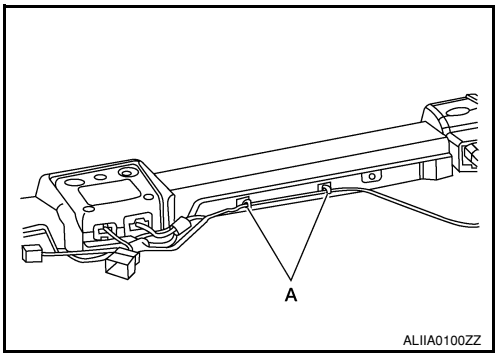

8. Install the seat control unit and connect the seat control unit harness connectors.

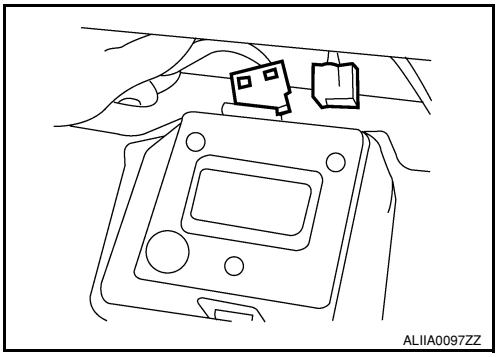

9. Install the lower seat mount bolts.

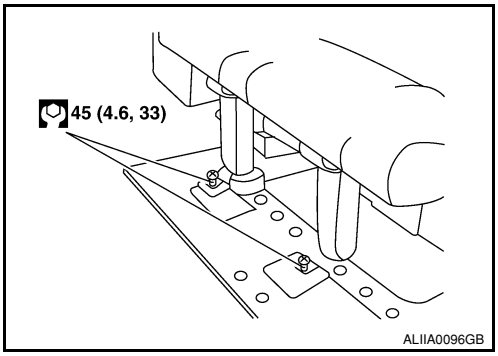

RH Side Seat

INFOID:0000000001315925

REMOVAL

1. Remove the storage bin. Refer to INT-18.
2. Remove the lower base trim covers.
3. Remove front link nuts (A) and RH hinge front bolt (B).

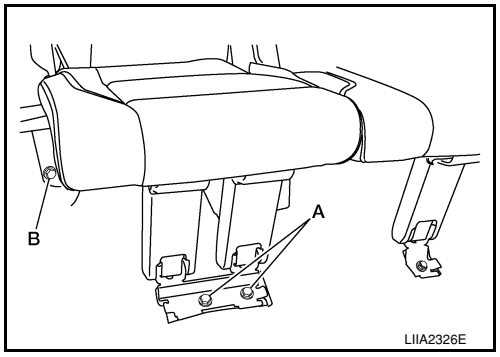

4. Remove push pin (2) and release elastic band (3) from seat frame (1).
   - ⇐: Vehicle front

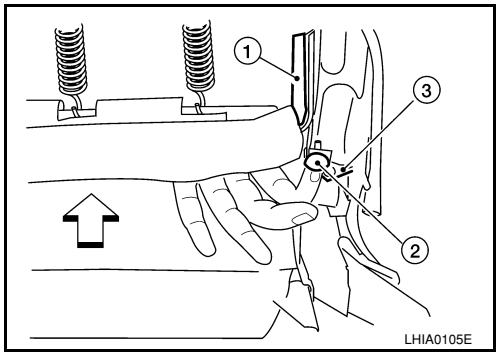

5. Partially lift seatback upright, then remove seat belt buckle (2) from between hinge cover (1) and seat cushion side facing (3).
   - ⇐: Vehicle front
6. Retract the seat into the cargo floor position.

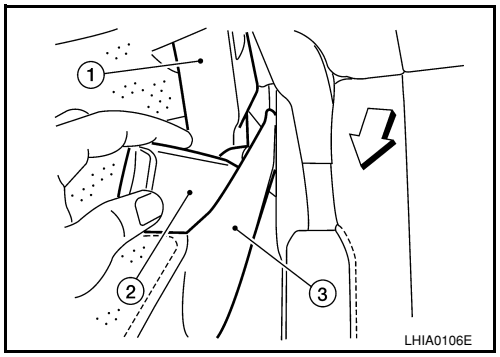

7. Remove the rear bolts from the seat assembly.
8. Disconnect the seat harness.
9. Remove the seat assembly.

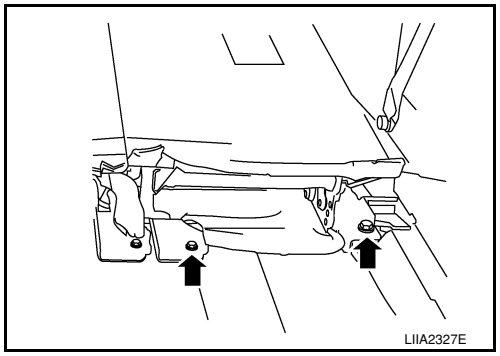

INSTALLATION

Installation is in the reverse order of removal.

DISASSEMBLY AND ASSEMBLY

FRONT SEAT

Exploded View

INFOID:0000000001315918

Driver Seat

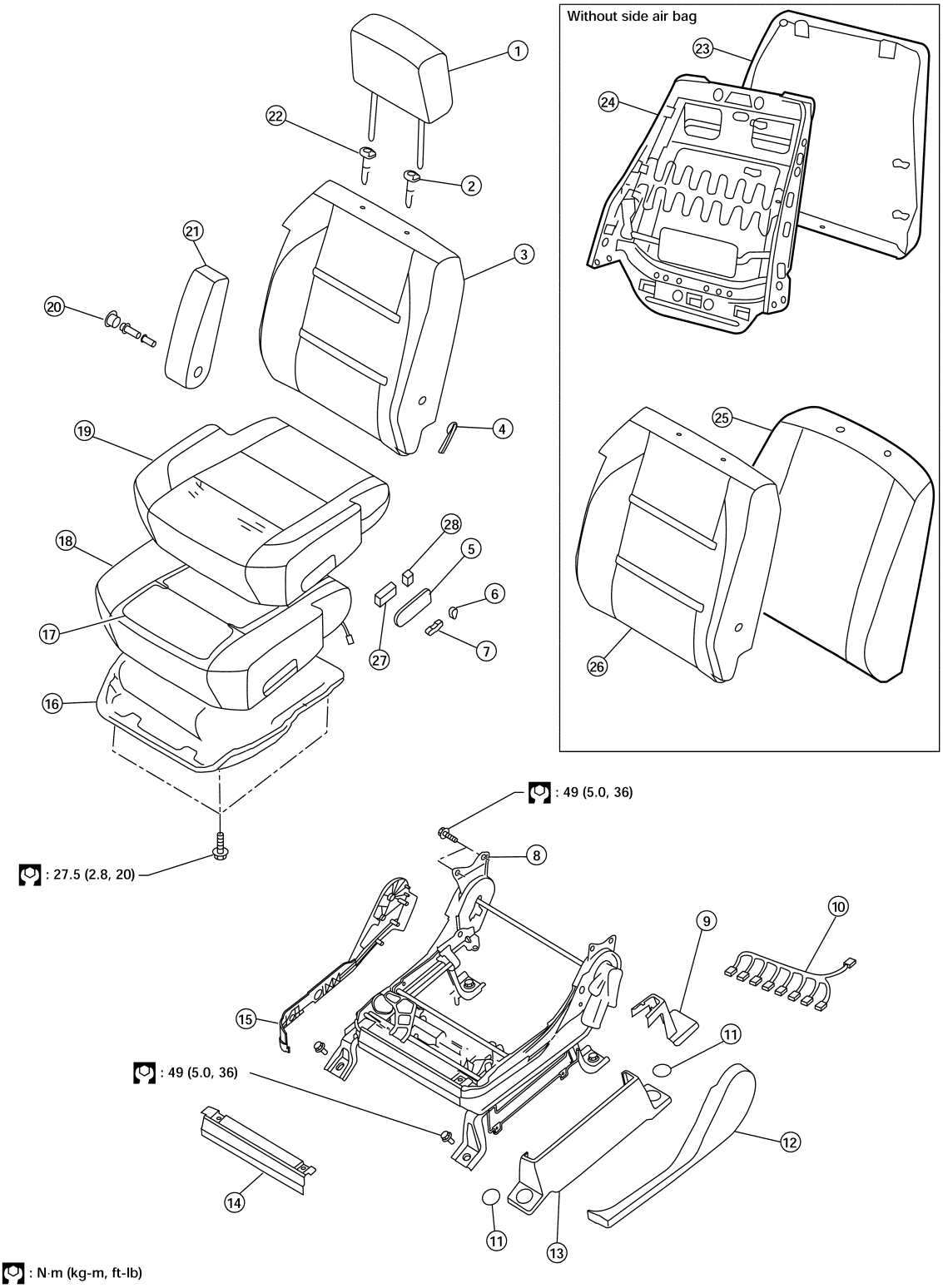

LIIA0927E

1. Headrest
2. Headrest holder with multi position lock
3. Seatback assembly
4. Lumbar support lever
5. Power seat switch escutcheon
6. Recliner switch knob
7. Slide switch knob
8. Driver power seat frame assembly
9. LH outer leg cover
10. Driver seat wiring harness
11. Bolt cover
12. Seat cushion outer finisher
13. Outer pedestal finisher
14. Seat cushion front finisher
15. Seat cushion inner finisher
16. Seat cushion frame
17. Seat cushion heating element
18. Seat cushion pad
19. Seat cushion trim cover
20. Armrest bolt cover
21. Armrest assembly
22. Headrest holder
23. Seatback board
24. Seatback frame
25. Seatback pad
26. Seatback trim cover
27. Seat slide switch
28. Recliner switch

Passenger Seat

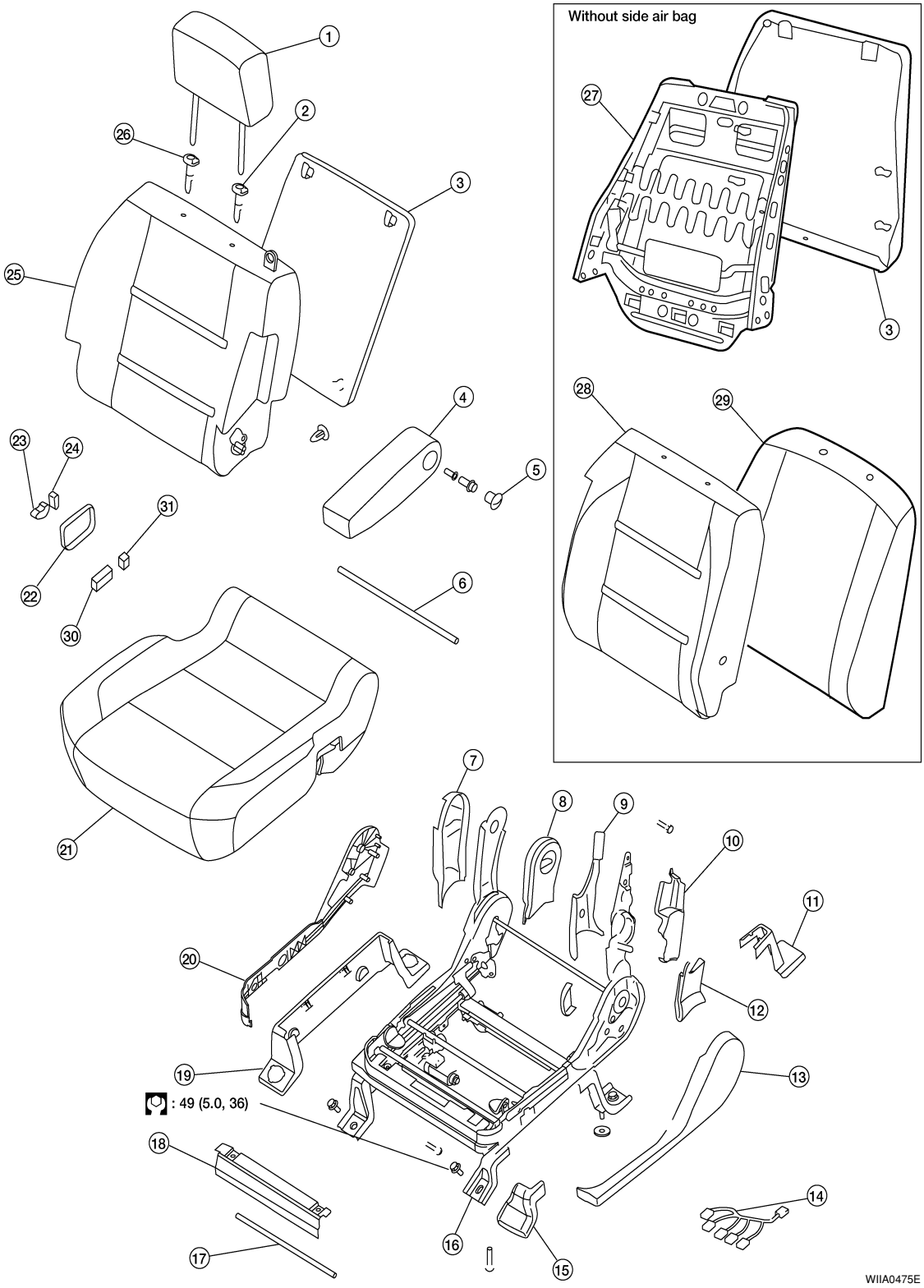

1. Headrest	2. Headrest holder with multi position lock	3. Seatback board
4. Armrest assembly	5. Armrest bolt cover	6. Fold flat link bar
7. Outboard reclining arm outer cover	8. Outboard reclining arm inner cover	9. Inboard reclining arm inner cove
10. Latch cover	11. LH outer leg cover	12. Outboard reclining arm inner cover
13. Seat cushion inner cover	14. Passenger seat wiring harness	15. Inner front leg cover
16. Power seat frame assembly	17. NVH assembly	18. Seat cushion front finisher

19. Outer pedestal finisher
20. Seat cushion outer finisher
21. Seat cushion assembly
22. Power seat switch escutcheon
23. Slide switch knob
24. Recliner switch knob
25. Seatback assembly
26. Headrest holder
27. Seatback frame
28. Seatback trim cover
29. Seatback pad
30. Recliner switch
31. Seat slide switch

Disassembly and Assembly

INFOID:0000000001315914

SEATBACK TRIM AND PAD

WARNING:
Removal of front side air bag module should only be done to allow deployment of front side air bag module prior to disposal of seatback assembly.
NOTE:
- Only complete seatback assemblies can be replaced on vehicles equipped with side air bags.
- Be sure to set the front/rear cushion lifter to the top position.

1. Remove the seatback board from the back of the seatback.

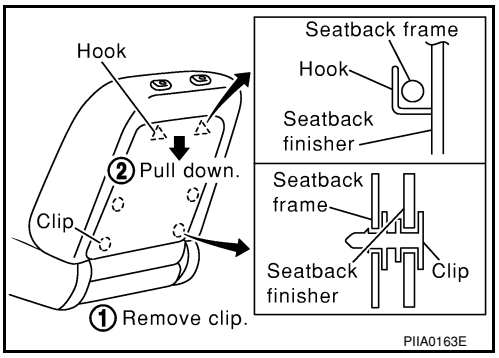

2. Remove the retainer.

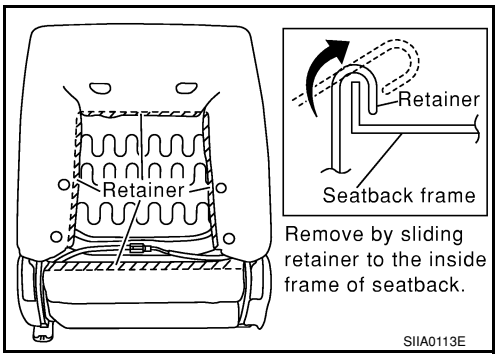

3. Remove the headrest.

4. From inside of the seatback, squeeze the headrest holder tabs at the base of the stay pipe and pull the up to remove.
NOTE:
Before installing the headrest holder, check its orientation (front/rear and right/left).

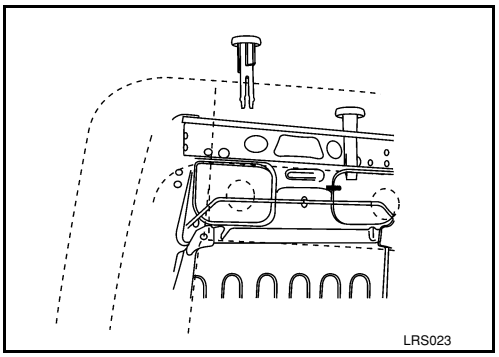

5. Remove the snap ring and the lumbar support lever knob.

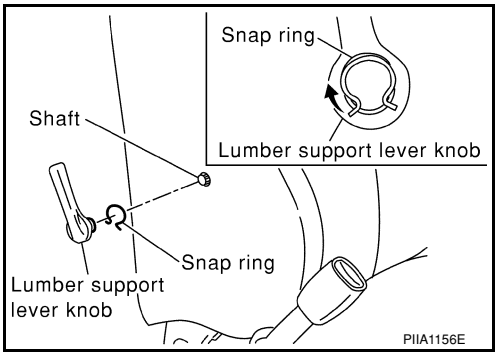

6. Disconnect the seatback heater harness. Remove the seatback trim and pad assembly. Remove the hog ring to separate the seatback trim from the pad and the heater unit.

Removal of seatback assembly

1. After completing the steps 1 and 2 of "Seatback Trim and Pad", remove the side air bag harness connector from the seat cushion.
2. Remove the mounting bolts (2 for each side) and seatback assembly.

Installation of seatback assembly

- Installation is in the reverse order of removal.

SEAT CUSHION TRIM AND PAD (DRIVER) OR SEAT CUSHION ASSEMBLY (PASSENGER)

CAUTION:

- **Front passenger seat is equipped with an Occupant Classification System sensor and control module. Do not disassemble front passenger seat cushion assembly or remove the trim as this will affect the Occupant Classification System calibration.**
- **Always replace passenger seat cushion as an assembly.**
- **when removed, the passenger seat cushion must always be placed pan side UP to prevent damage.**
- **During installation, the wire harness clips must be reinstalled in the holes they were originally in. Do not add clips.**
- **The Occupant Classification System control module can only be replaced as part of the seat cushion assembly.**

NOTE:

If the vehicle has been involved in a collision the seat must be inspected for damage. Refer to SR-17 .

1. Remove the power seat switch knobs and power seat switch escutcheon (or recline knobs on manual seat).

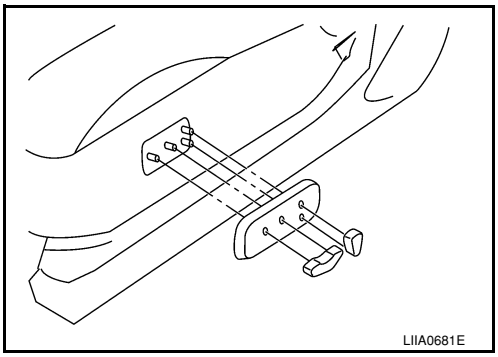

2. Remove the front seat cushion finisher (inner).

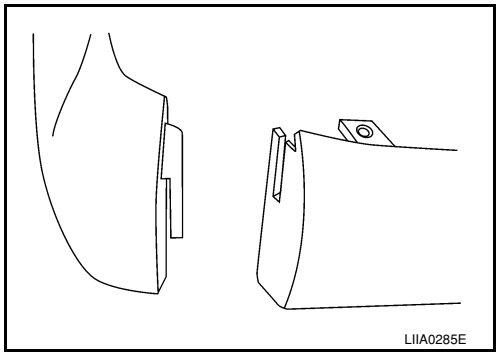

3. Remove the power seat switch screws (or lift knobs on manual seats).
4. Remove four bolts and the seat cushion assembly.

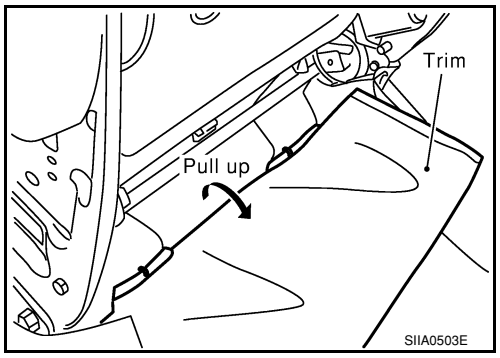

5. Remove the retainer on the seat cushion frame, then remove the harness connector for the seat heater.
6. On the drivers seat only, after removing the seat cushion trim and pad, remove the hog rings to separate the trim cover from the pad and seat cushion heater unit.

SECOND SEAT

Exploded View

INFOID:0000000001315919

Second Row RH

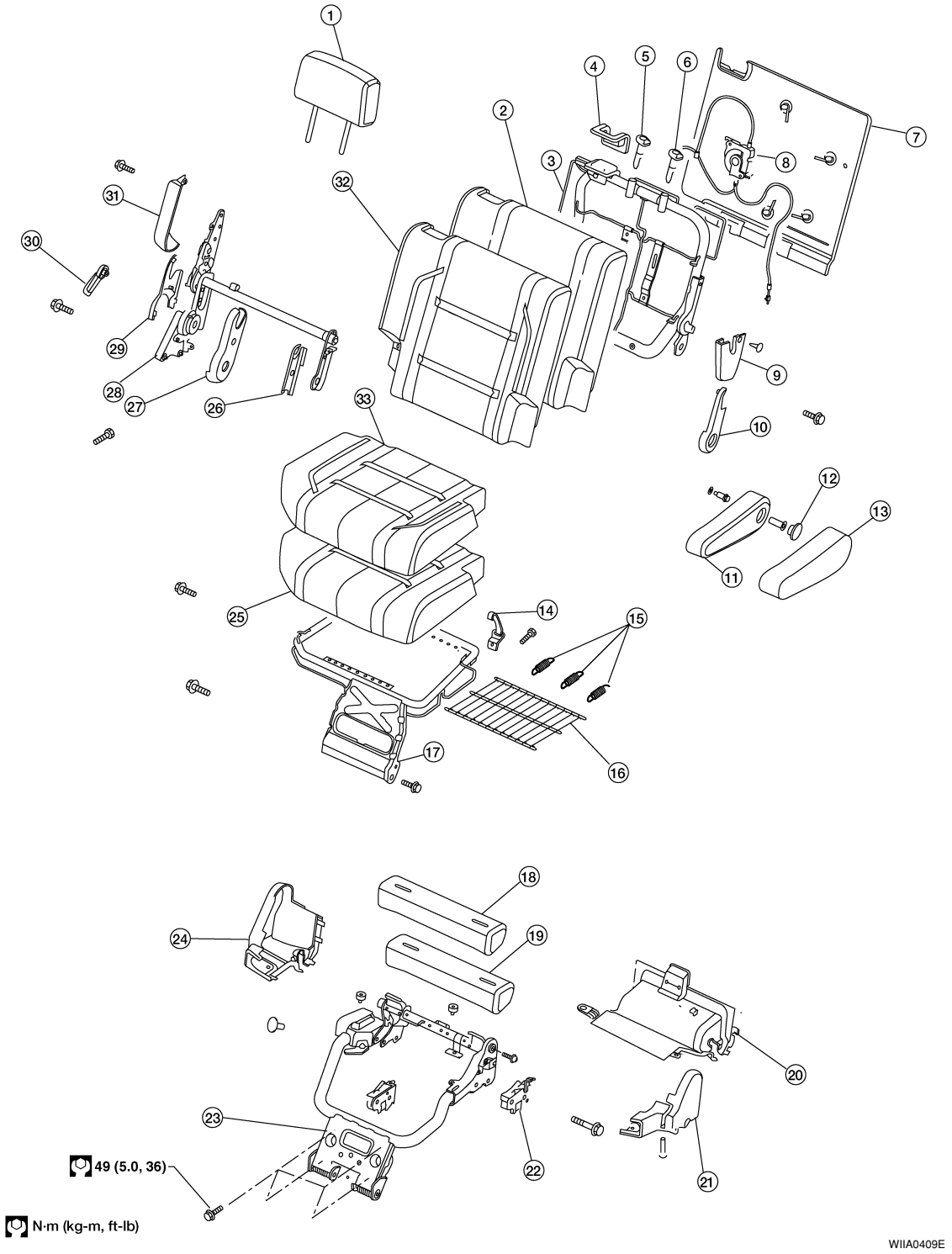

1. Headrest
2. Seatback pad
3. Seatback frame
4. Rear seat bezel
5. RH Headrest guide
6. LH Headrest guide
7. Seat back panel
8. Seat actuator assembly
9. Reclining device inner cover

10. Reclining device inner mid cover
11. Armrest assembly
12. Armrest bolt cover
13. Armrest trim cover
14. Latch assembly
15. Seat cushion mat springs
16. Seat cushion mat
17. Seat cushion frame assembly
18. Seat support trim cover
19. Seat support pad assembly
20. Lower rear seat cover
21. Lower rear seat cover inner
22. Outboard cushion floor latch
23. Seat cushion support frame assembly
24. Lower rear seat cover outer
25. Seat cushion pad
26. Inner inboard reclining device cover
27. Outer inboard reclining device cover
28. Seat latch and recliner release
29. Reclining device outer mid cover
30. Reclining device lever
31. Reclining device outer cover
32. Seatback trim cover
33. Seat cushion trim cover

Second row LH

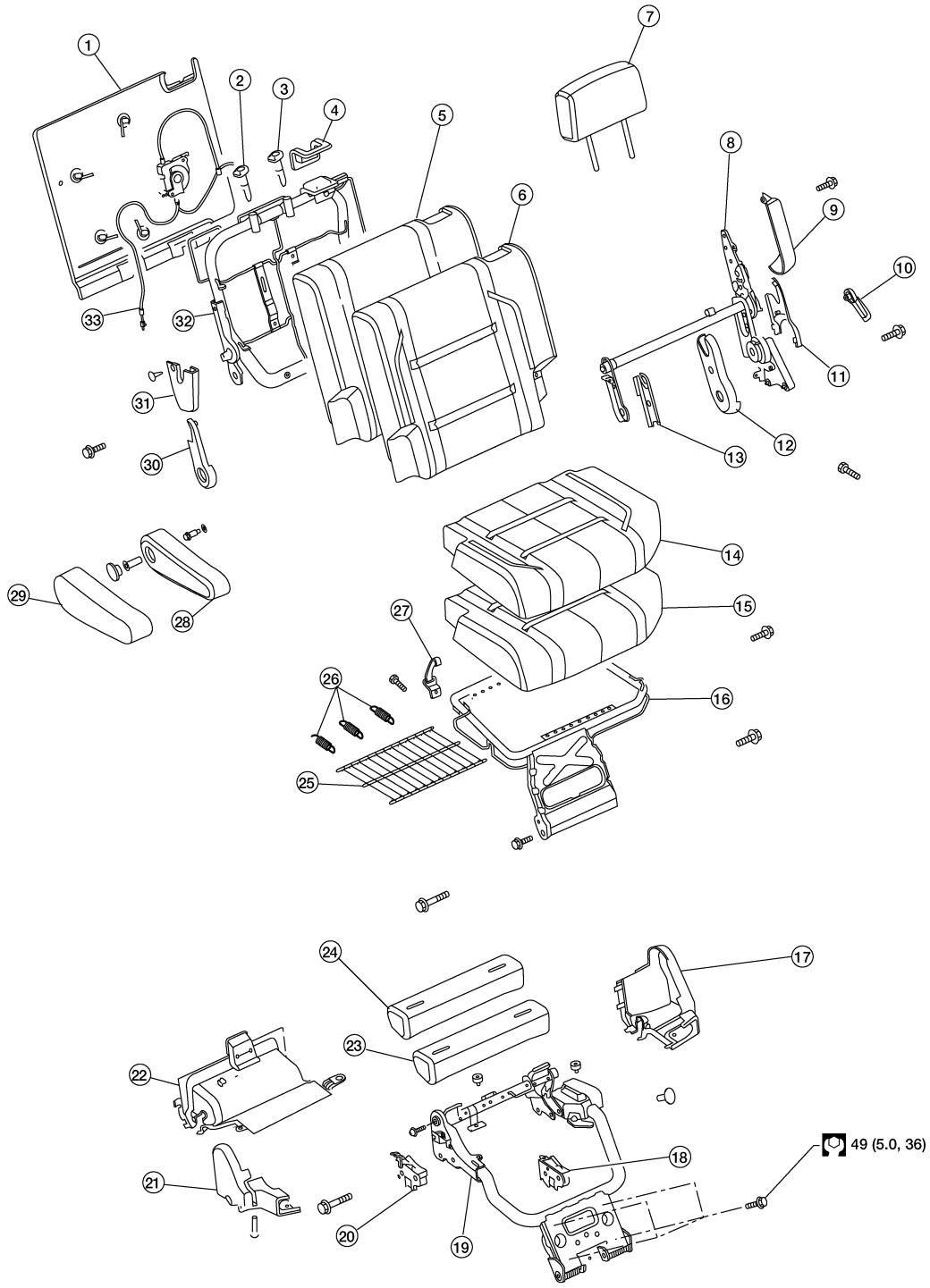

N·m (kg-m, ft-lb)

WIIA0411E

1. Seatback panel
2. RH headrest guide
3. LH headrest guide
4. Rear seat bezel
5. Seatback pad
6. Seatback trim cover
7. Headrest
8. Seat latch and recliner release
9. Reclining device outer cover
10. Reclining device lever
11. Reclining device outer mid cover
12. Outer inboard reclining device cover
13. Inner inboard reclining device cover
14. Seat cushion trim cover
15. Seat cushion pad
16. Seat cushion frame assembly
17. Lower rear seat cover outer
18. Outboard cushion floor latch

19. Seat cushion support frame assembly
20. Inboard cushion floor latch
21. Lower rear seat cover inner
22. Lower rear seat cover
23. Seat support pad assembly
24. Seat support trim cover
25. Seat cushion mat
26. Seat cushion mat springs
27. Latch assembly
28. Armrest assembly
29. Armrest trim cover
30. Reclining device outer cover
31. Reclining device inner mid cover
32. Seatback frame
33. Seat actuator assembly

Second row center

SEC. 861

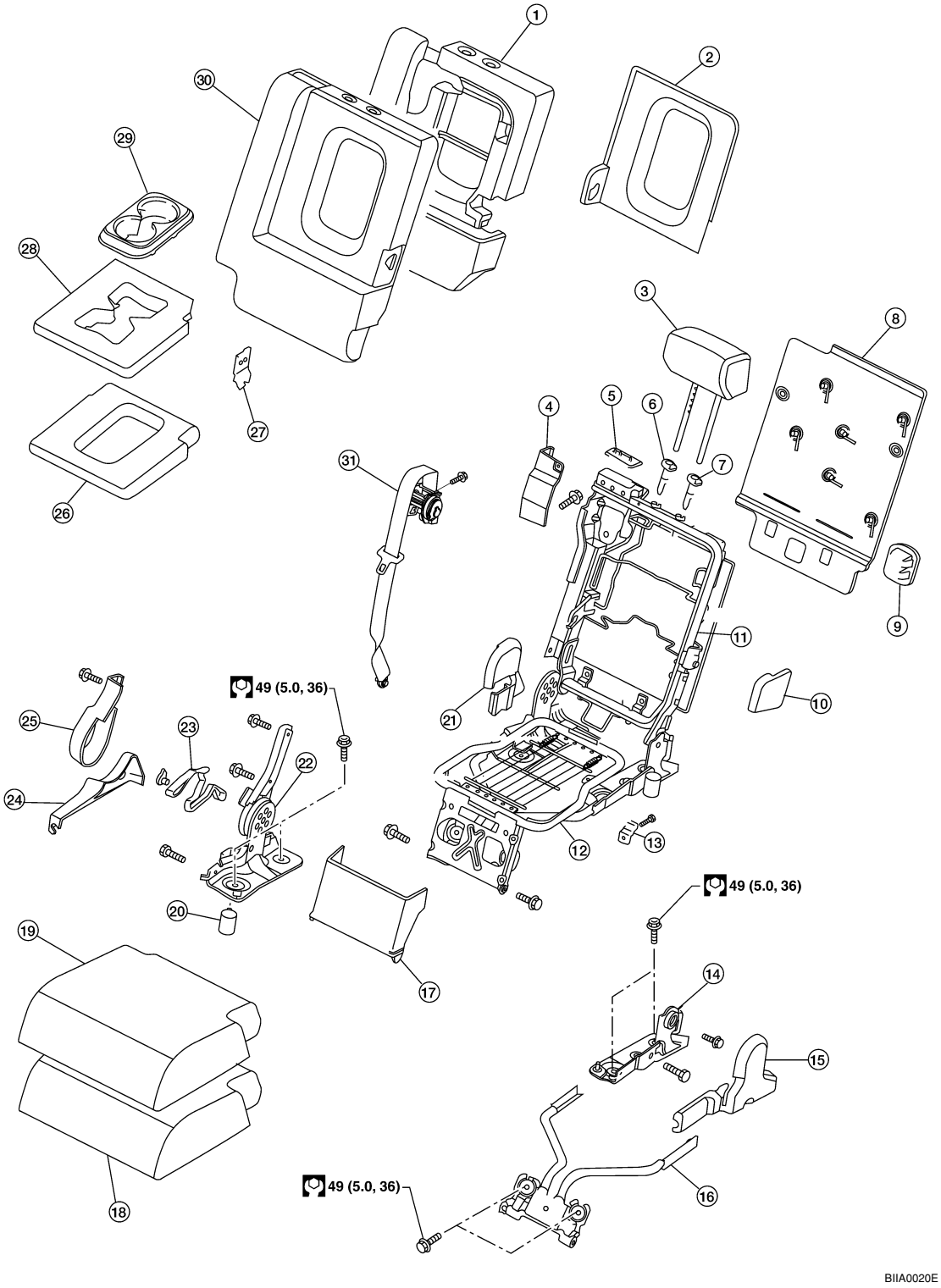

1. Seatback pad
2. Armrest finisher
3. Headrest
4. Seat belt retractor cover
5. Seat belt bezel
6. RH headrest guide locking
7. LH headrest guide free
8. Seatback board
9. Seat bracket cover
10. Armrest pivot bracket cover
11. Seatback frame
12. Seat cushion frame
13. Latch assembly
14. Lower rear pivot bracket support
15. Outer hinge cover
16. Center seat base assembly
17. Link and pivot bracket apron
18. Seat cushion pad
19. Seat cushion trim cover
20. Cushion stop bumper
21. Inner lever cover
22. Seat hinge assembly
23. Seat lever assembly
24. Outer lever cover
25. Seat lock cover
26. Armrest cover
27. Armrest bracket
28. Armrest pad
29. Cup holder
30. Seatback trim cover
31. Seat belt assembly

THIRD SEAT

W/O Power Folding

INFOID:0000000001315921

Exploded View

INFOID:0000000001315920

Third seat LH

SEC. 882

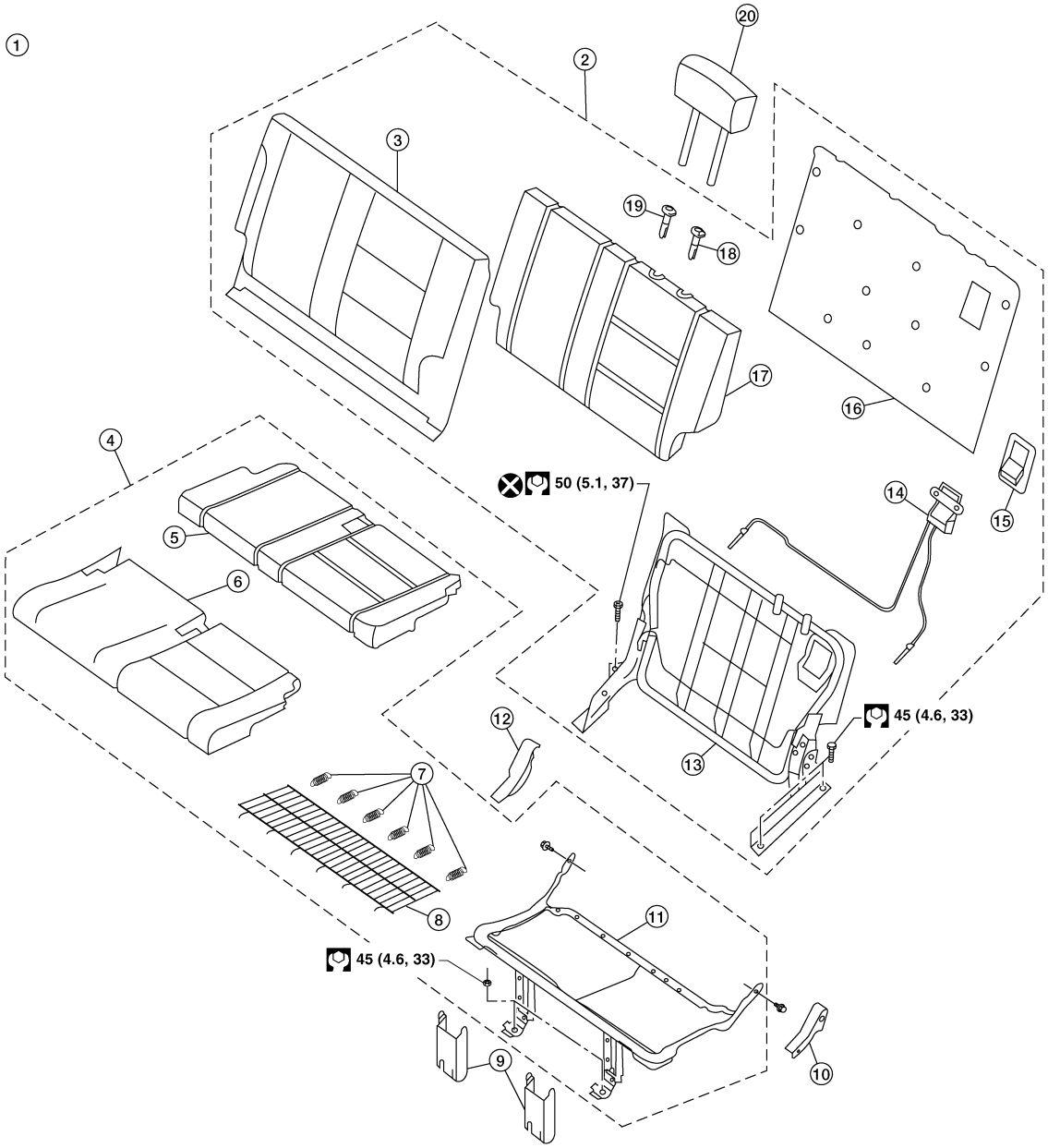

LIIA2322E

1. LH third seat assembly
2. Seatback assembly
3. Seatback trim cover
4. Seat cushion assembly
5. Seat cushion pad
6. Seat cushion trim cover
7. Flex mat springs
8. Flex mat
9. Front link covers
10. RH hinge cover
11. Seat cushion frame
12. LH hinge cover
13. Seatback frame assembly
14. Seatback cable assembly
15. Release handle bezel
16. Seatback board
17. Seatback pad
18. Headrest holder, locking
19. Headrest holder, free
20. Headrest

Third seat RH

SEC. 882

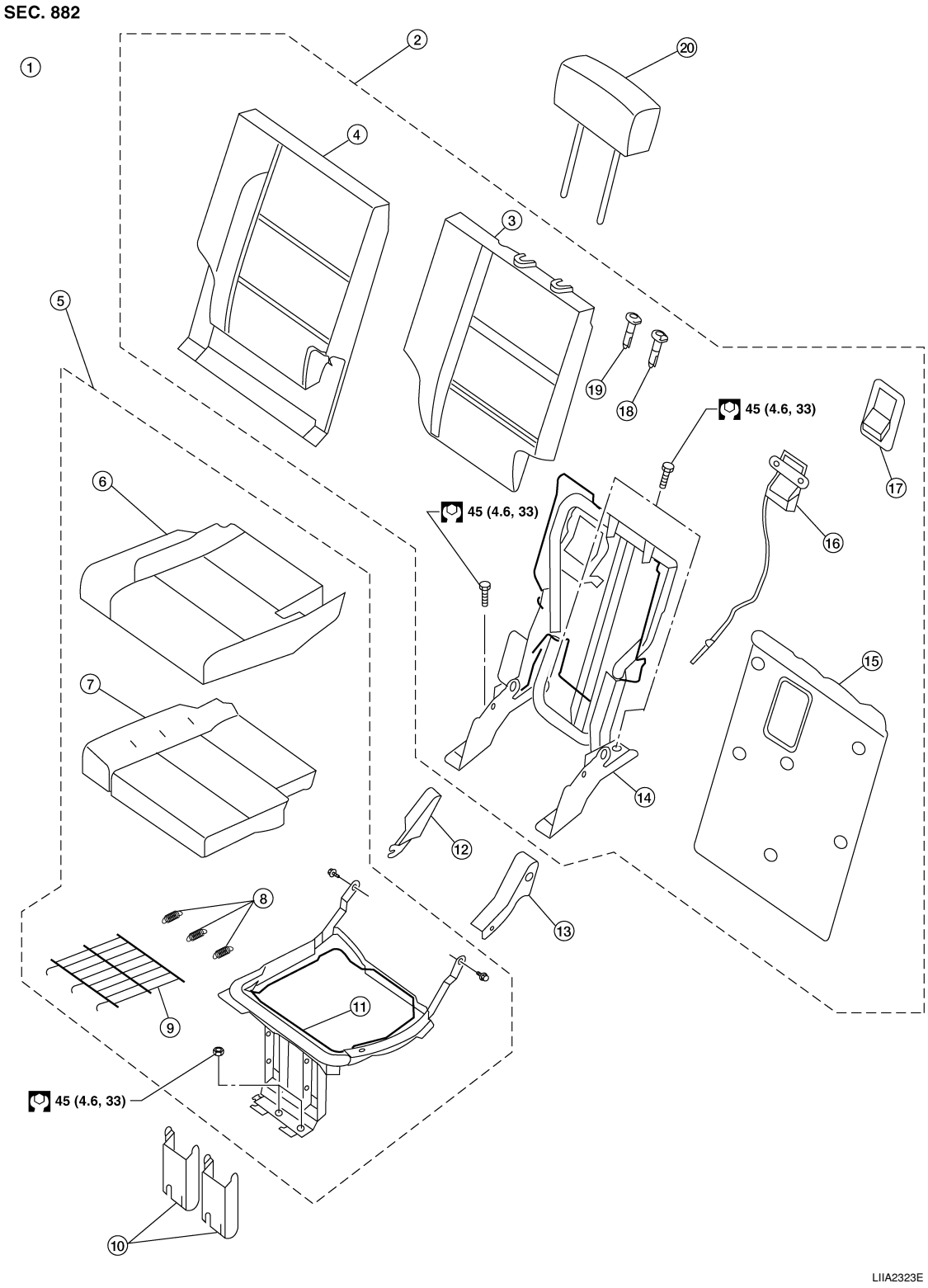

1. RH third seat assembly
2. Seatback assembly
3. Seatback pad
4. Seatback trim cover
5. Seat cushion assembly
6. Seat cushion trim cover
7. Seat cushion pad
8. Flex mat springs
9. Flex mat
10. Front link covers
11. Seat cushion frame
12. RH hinge cover
13. LH hinge cover
14. Seatback frame assembly
15. Seatback board
16. Seatback cable assembly
17. Release handle bezel
18. Headrest holder, locking
19. Headrest holder, free
20. Headrest

LH Side Seat

INFOID:0000000001315909

DISASSEMBLY AND ASSEMBLY

CAUTION:

Discard the seat belt buckle bolt and use a new bolt for installation.

Power Folding

INFOID:0000000001315927

Exploded View

INFOID:0000000001315928

Third seat LH

SEC. 882

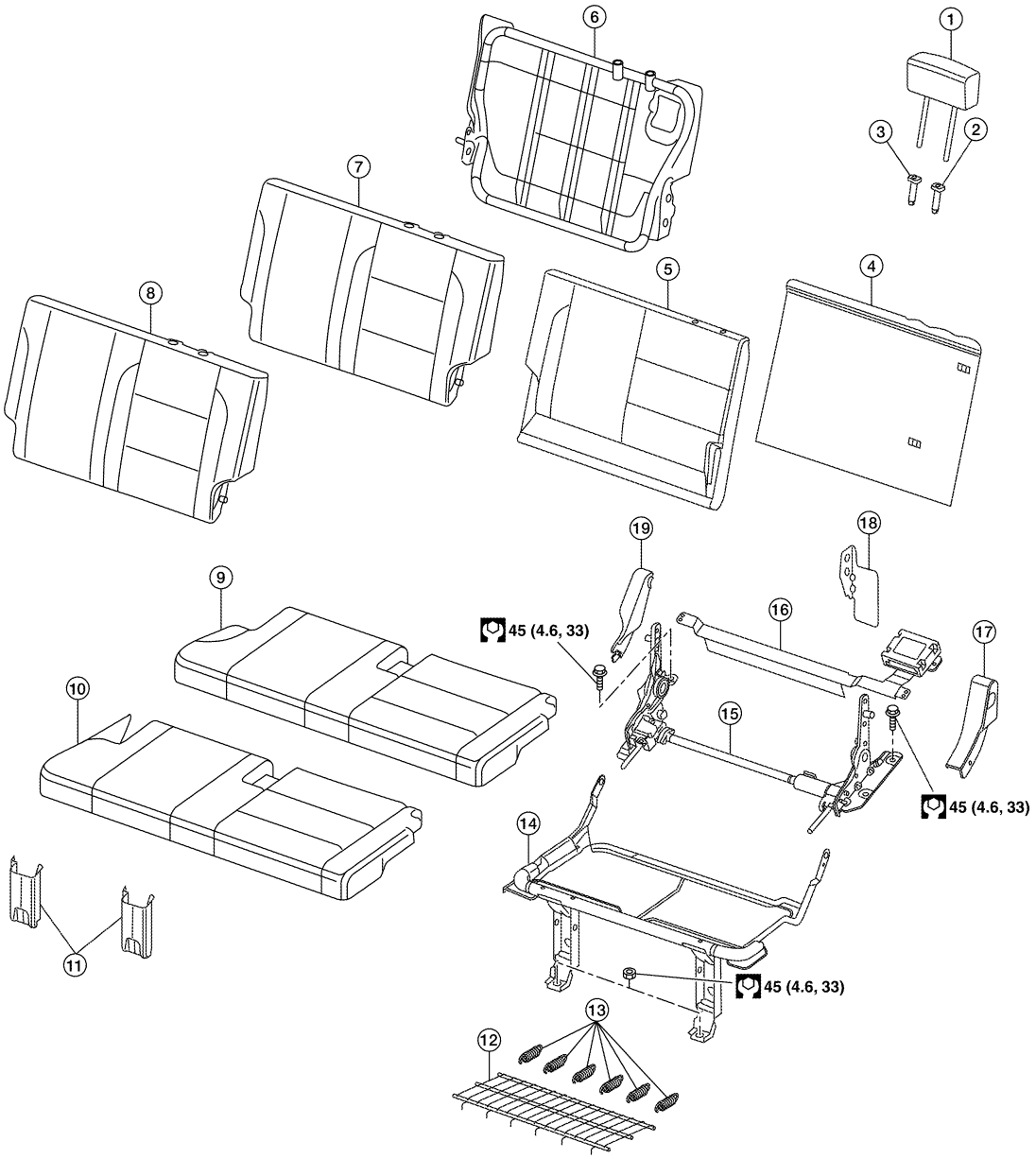

ALIIA0071GB

1. Headrest
2. Headrest holder, locking
3. Headrest holder, free
4. Seatback board
5. Seatback pad
6. Seatback frame assembly
7. Seatback cushion
8. Seatback trim cover
9. Seat cushion

10. Seat cushion trim cover
11. Front link covers
12. Flex mat
13. Flex mat springs
14. Seat cushion frame assembly
15. Seat motor/hinge assembly
16. Control module/cross beam assembly
17. LH hinge cover
18. Side link cover
19. RH hinge cover

CAUTION:
Discard the seat belt buckle bolt and use a new bolt for installation.

Third seat RH

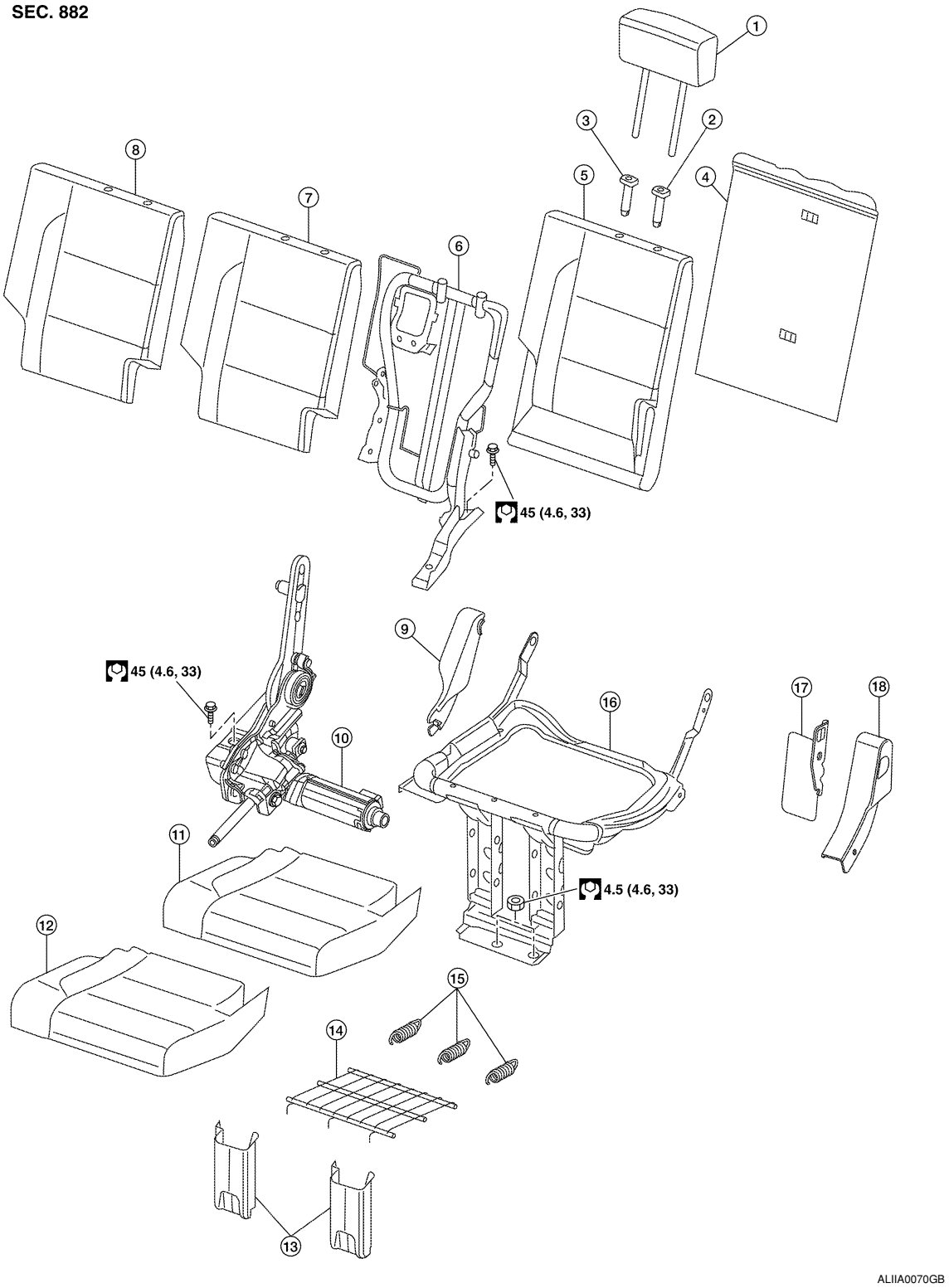

1. Headrest
2. Headrest holder, locking
3. Headrest holder, free
4. Seatback board
5. Seatback pad
6. Seatback frame assembly
7. Seatback cushion
8. Seatback trim cover
9. RH hinge cover
10. Seat motor/hinge assembly
11. Seat cushion
12. Seat cushion trim cover
13. Front link covers
14. Flex mat
15. Flex mat springs
16. Seat cushion frame assembly
17. Side link cover
18. LH hinge cover

LH Side Seat

INFOID:0000000001315929

DISASSEMBLY AND ASSEMBLY

CAUTION:

Discard the seat belt buckle bolt and use a new bolt for installation.