FRONT & REAR SUSPENSION

SECTION SU

CONTENTS

FRONT SUSPENSION 2
Precautions 2
PRECAUTIONS 2
Preparation 2
SPECIAL SERVICE TOOLS 2
COMMERCIAL SERVICE TOOLS 2
Noise, Vibration and Harshness (NVH) Troubleshooting 4
NVH TROUBLESHOOTING CHART 4
Components 5
On-vehicle Service 6
FRONT SUSPENSION PARTS 6
FRONT WHEEL ALIGNMENT 6
Coil Spring and Shock Absorber 10
COMPONENTS 10
REMOVAL AND INSTALLATION 11
DISASSEMBLY 11
INSPECTION 11
ASSEMBLY 12
Stabilizer Bar 12
REMOVAL AND INSTALLATION 12
Transverse Link and Lower Ball Joint 13
REMOVAL AND INSTALLATION 13
INSPECTION 14
Service Data and Specifications (SDS) 15
GENERAL SPECIFICATIONS (FRONT) 15
FRONT WHEEL ALIGNMENT (UNLADEN*1) 16
LOWER BALL JOINT 16
WHEELARCH HEIGHT (UNLADEN*) 17
WHEEL RUNOUT 17
REAR SUSPENSION 18
Precautions 18
PRECAUTIONS 18
Preparation 18
COMMERCIAL SERVICE TOOLS 18
Noise, Vibration and Harshness (NVH) Troubleshooting 18
Components 19
On-vehicle Service 20
REAR SUSPENSION PARTS 20
REAR WHEEL ALIGNMENT 20
Removal and Installation 23
REMOVAL 24
INSTALLATION 24
Coil Spring and Shock Absorber 25
REMOVAL AND INSTALLATION 25
DISASSEMBLY 25
INSPECTION 25
ASSEMBLY 26
Torsion Beam, Lateral Link and Control Rod 26
DISASSEMBLY 26
INSPECTION 26
ASSEMBLY 27
Service Data and Specifications (SDS) 28
GENERAL SPECIFICATIONS (REAR) 28
REAR WHEEL ALIGNMENT (UNLADEN*) 28

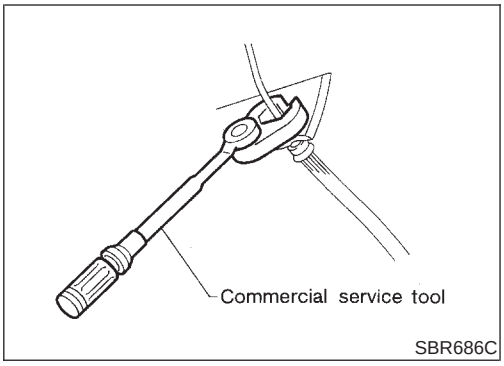

Precautions

PRECAUTIONS

NFSU0001

- **When installing rubber parts, final tightening must be carried out under unladen condition* with tires on ground. Oil will shorten the life of rubber bushes. Be sure to wipe off any spilled oil.**
  ***: Fuel, radiator coolant and engine oil full. Spare tire, jack, hand tools and mats in designated positions.**
- **After installing removed suspension parts, check wheel alignment and adjust if necessary.**
- **Use flare nut wrench when removing or installing brake tubes.**
- **Always torque brake lines when installing.**
- **Lock nuts are unreusable parts; always use new ones. When replacing, do not wipe the oil off the new lock nut before tightening.**

Preparation

SPECIAL SERVICE TOOLS

NFSU0002

The actual shapes of Kent-Moore tools may differ from those of special service tools illustrated here.

Tool number (Kent-Moore No.) Tool name	Description	
HT72520000 (J25730-A) Ball joint remover	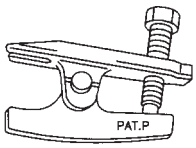 NT146	Removing tie-rod outer end and lower ball joint

COMMERCIAL SERVICE TOOLS

NFSU0003

Tool name	Description	
Attachment Wheel alignment	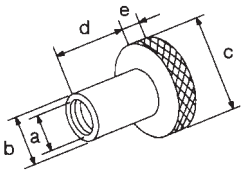 NT148	Measure wheel alignment **a: Screw M24 x 1.5 pitch** **b: 35 mm (1.38 in) dia.** **c: 65 mm (2.56 in) dia.** **d: 56 mm (2.20 in)** **e: 12 mm (0.47 in)**
1 Flare nut crowfoot 2 Torque wrench	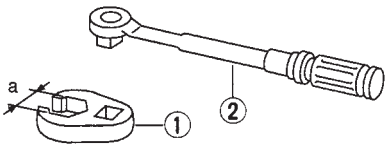 NT360	Removing and installing each brake piping **a: 10 mm (0.39 in)**

Tool name	Description
Spring compressor	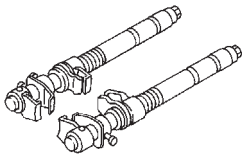 NT717 Removing and installing coil spring

Noise, Vibration and Harshness (NVH) Troubleshooting

=NFSU0004

NVH TROUBLESHOOTING CHART

NFSU0004S01

Use the chart below to help you find the cause of the symptom. If necessary, repair or replace these parts.

		Reference page	SU-5, 19	SU-11, 25	—	—	—	SU-10, 23	SU-6	SU-12	SU-6	—	—	—	—	—	—	AX-3	AX-3	Refer to SUSPENSION in this chart.	Refer to TIRES in this chart.	Refer to ROAD WHEEL in this chart.	BR-7	ST-5
		Possible Cause and SUSPECTED PARTS	Improper installation, looseness	Shock absorber deformation, damage or deflection	Bushing or mounting deterioration	Parts interference	Spring fatigue	Suspension looseness	Incorrect wheel alignment	Stabilizer bar fatigue	Out-of-round	Imbalance	Incorrect air pressure	Uneven tire wear	Deformation or damage	Non-uniformity	Incorrect tire size	DRIVE SHAFT	AXLE	SUSPENSION	TIRES	ROAD WHEEL	BRAKES	STEERING
Symptom	SUSPENSION	Noise	×	×	×	×	×	×										×	×		×	×	×	×
		Shake	×	×	×	×		×										×	×		×	×	×	×
		Vibration	×	×	×	×	×											×	×		×			×
		Shimmy	×	×	×	×			×										×		×	×	×	×
		Judder	×	×	×														×		×	×	×	×
		Poor quality ride or handling	×	×	×	×	×		×	×									×		×	×		
	TIRES	Noise	×								×	×	×	×	×	×		×	×	×		×	×	×
		Shake	×								×	×	×	×	×		×	×	×	×		×	×	×
		Vibration											×				×	×	×	×				×
		Shimmy	×								×	×	×	×	×	×	×		×	×		×	×	×
		Judder	×								×	×	×	×	×		×		×	×		×	×	×
		Poor quality ride or handling	×								×	×	×	×	×		×		×	×		×		
	ROAD WHEEL	Noise	×								×	×			×			×	×	×	×		×	×
		Shake	×								×	×			×			×	×	×	×		×	×
		Shimmy, Judder	×								×	×			×				×	×	×		×	×
		Poor quality ride or handling	×								×	×			×				×	×	×			

×: Applicable

Components

NFSU0005

SEC. 391•400•401

When installing rubber parts, final tightening must be carried out under unladen condition* with tires on ground.
*** Fuel, radiator coolant and engine oil full. Spare tire, jack, hand tools and mats in designated positions.**

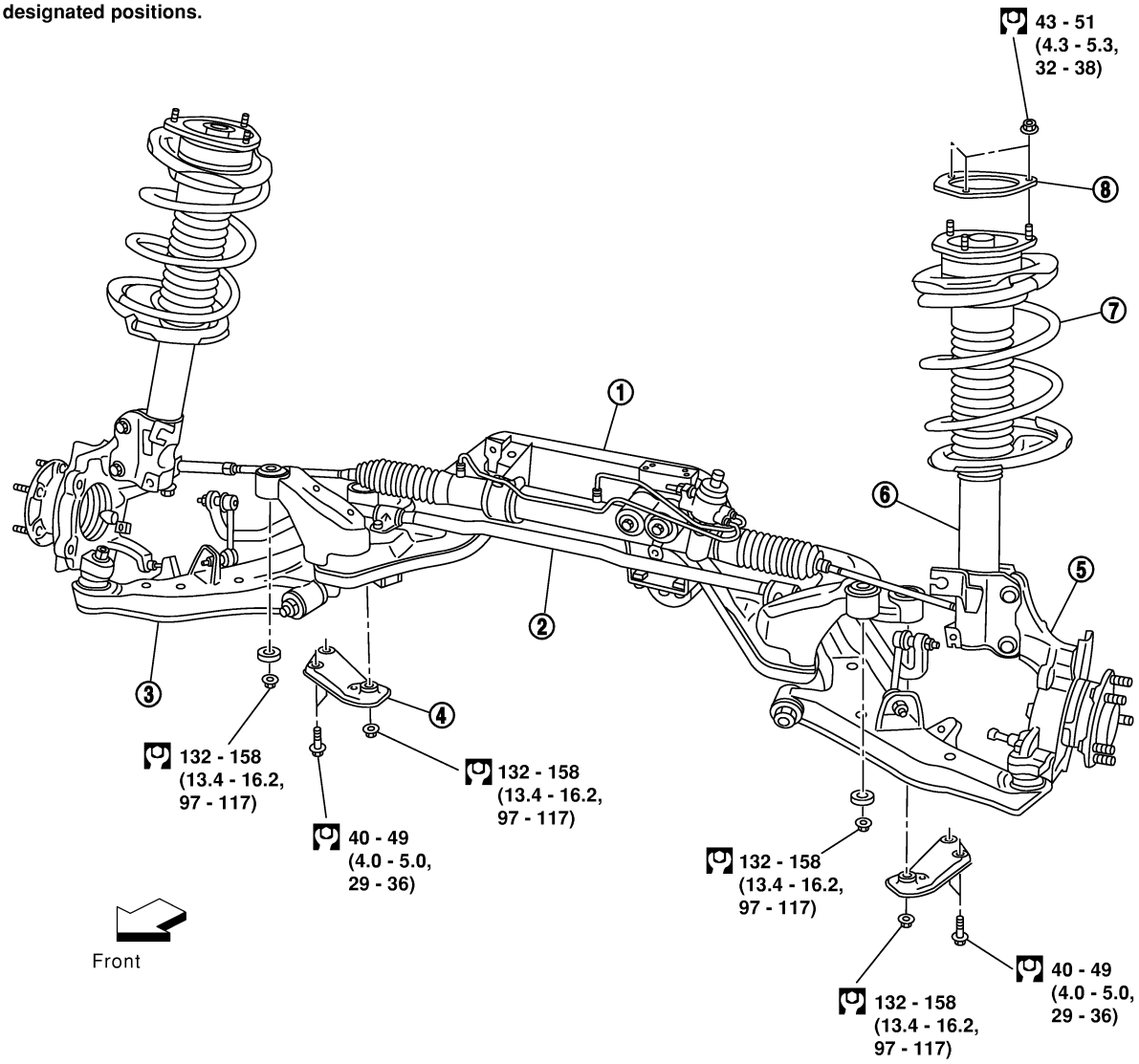

: N•m (kg-m, ft-lb)

SSU009

1. Front suspension member
2. Stabilizer bar
3. Transverse link
4. Rebound stopper
5. Knuckle
6. Strut assembly
7. Coil spring
8. Strut mount plate

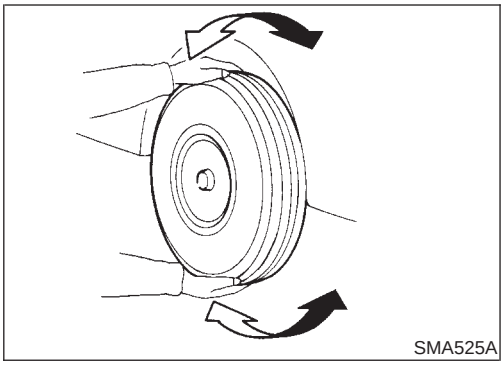
SMA525A

On-vehicle Service

FRONT SUSPENSION PARTS

NFSU0006

Check front axle and front suspension parts for excessive play, cracks, wear or other damage.

- Shake each front wheel to check for excessive play.
- Make sure that cotter pin is inserted.
- Retighten all axle and suspension nuts and bolts to the specified torque.

  Tightening torque:
  Refer to "FRONT SUSPENSION", SU-5.

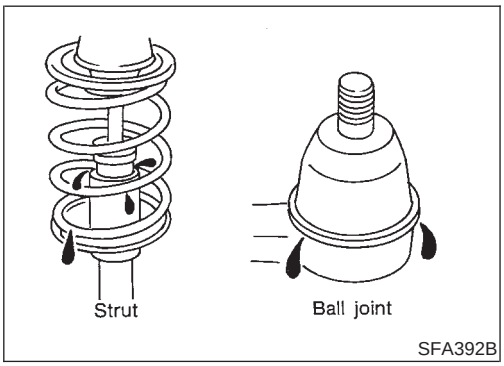

SFA392B

- Check strut (shock absorber) for oil leakage or other damage.
- Check suspension ball joint for grease leakage and ball joint dust cover for cracks or other damage.
  If ball joint dust cover is cracked or damaged, replace transverse link.

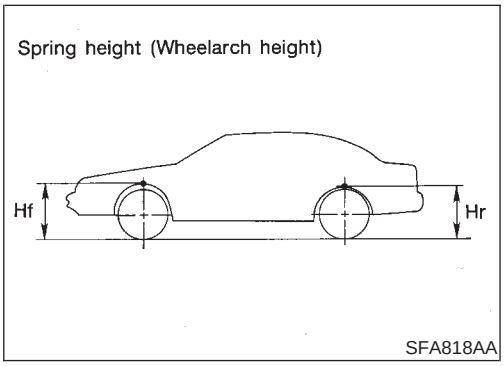

SFA818AA

- Check spring height from top of wheelarch to the ground.

a) Vehicle must be unladen*, parked on a level surface, and tires checked for proper inflation and wear (tread wear indicator must not be showing).
   *: Fuel, radiator coolant and engine oil full. Spare tire, jack, hand tools and mats in designated positions.
b) Bounce vehicle up and down several times before measuring.
   Standard height: Refer to SDS (SU-17).
c) Spring height is not adjustable. If out of specification, check for worn springs or suspension parts.

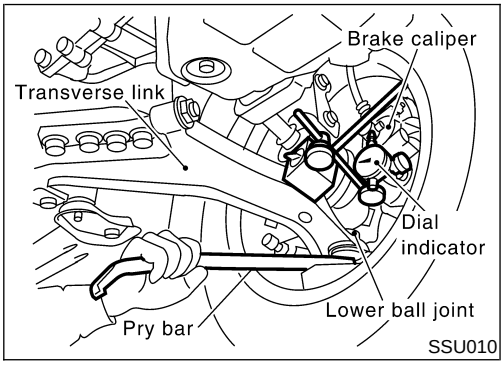

SSU010

- Check suspension ball joint end play.

a) Jack up front of vehicle and set the stands.
b) Clamp dial indicator onto transverse link and place indicator tip on lower edge of brake caliper.
c) Make sure front wheels are straight and brake pedal is depressed.
d) Place a pry bar between transverse link and inner rim of road wheel.
e) While raising and releasing pry bar, observe maximum dial indicator value.

   Vertical end play: 0 mm (0 in)
f) If ball joint movement is beyond specifications, remove and replace it.

FRONT WHEEL ALIGNMENT

NFSU0007

Before checking front wheel alignment, be sure to make a preliminary inspection (Unladen*).
*: Fuel, radiator coolant and engine oil full. Spare tire, jack, hand tools and mats in designated positions.

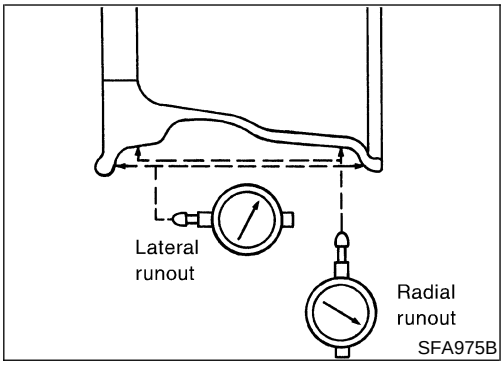

Preliminary Inspection

NFSU0007S01

Aluminum wheel

NFSU0007S0103

1. Check tires for wear and improper inflation.
2. Check wheels for deformation, cracks and other damage.
   If deformed, remove wheel and check wheel runout.

a. Remove tire from aluminum wheel and mount on a tire balance machine.

b. Set dial indicator as shown in the illustration.

Wheel runout (Dial indicator value):

Refer to SDS, SU-17.

3. Check front wheel bearings for looseness.
4. Check front suspension for looseness.
5. Check steering linkage for looseness.
6. Check that front shock absorbers work properly.
7. Check vehicle posture (Unladen).

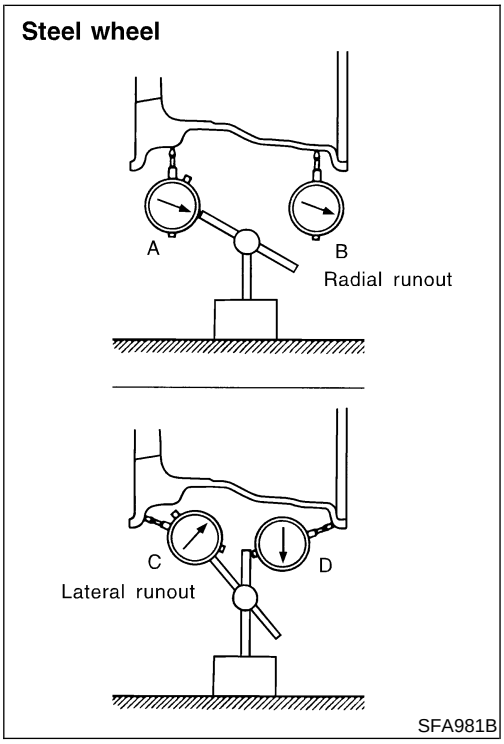

Steel wheel

NFSU0007S0104

1. Check tires for wear and improper inflation.
2. Check wheels for deformation, cracks and other damage.
   If deformed, remove wheel and check wheel runout.

a. Remove tire from steel wheel and mount wheel on a tire balance machine.

b. Set two dial indicators as shown in the illustration.

c. Set each dial indicator to 0.

d. Rotate wheel and check dial indicators at several points around the circumference of the wheel.

e. Calculate runout at each point as shown below.
   Radial runout = (A + B)/2
   Lateral runout = (C + D)/2

f. Select maximum positive runout value and the maximum negative value.
   Add the two values to determine total runout.
   In case a positive or negative value is not available, use the maximum value (negative or positive) for total runout.
   If the total runout value exceeds the limit, replace steel wheel.

Wheel runout:

Refer to SDS, SU-17.

3. Check front wheel bearings for looseness.
4. Check front suspension for looseness.
5. Check steering linkage for looseness.
6. Check that front shock absorbers work properly.
7. Check vehicle posture (Unladen).

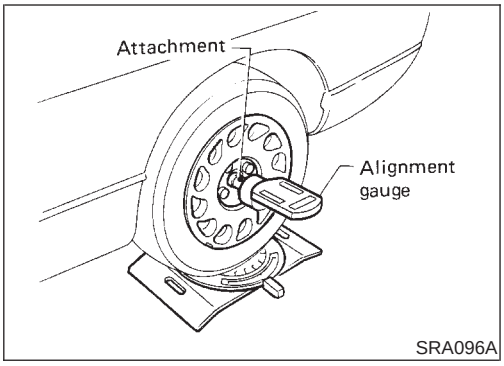

Camber, Caster and Kingpin Inclination

NFSU0007S02

Camber, caster and kingpin inclination are preset at factory and cannot be adjusted.

1. Measure camber, caster and kingpin inclination of both right and left wheels with a suitable alignment gauge.

   Camber, caster and kingpin inclination:

   Refer to SDS, SU-16.

2. If camber, caster or kingpin inclination is not within specification, inspect front suspension parts. Replace damaged or worn out parts.

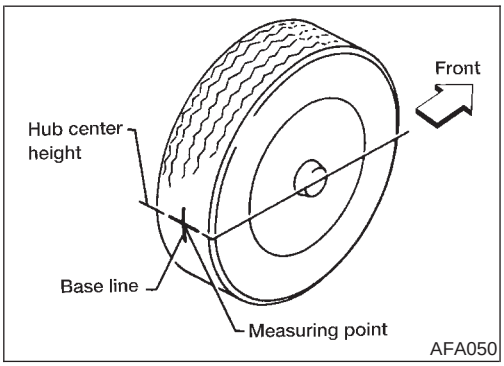

Toe-in

NFSU0007S03

Measure toe-in using the following procedure.

WARNING:

- **Always perform the following procedure on a flat surface.**
- **Make sure that no person is in front of the vehicle before pushing it.**

1. Bounce front of vehicle up and down to stabilize the posture.
2. Push the vehicle straight ahead about 5 m (16 ft).
3. Put a mark on base line of tread (rear side) of both tires at the same height as hub center. These are measuring points.

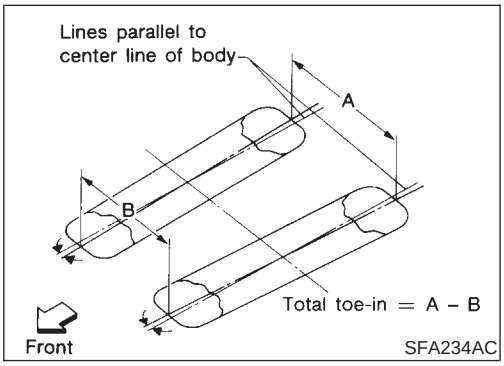

4. Measure distance "A" (rear side).
5. Push the vehicle slowly ahead to rotate the wheels 180 degrees (1/2 turn).

If the wheels have rotated more than 180 degrees (1/2 turn), try the above procedure again from the beginning. Never push vehicle backward.

6. Measure distance "B" (front side).

   Total toe-in:

   Refer to SDS, SU-16.

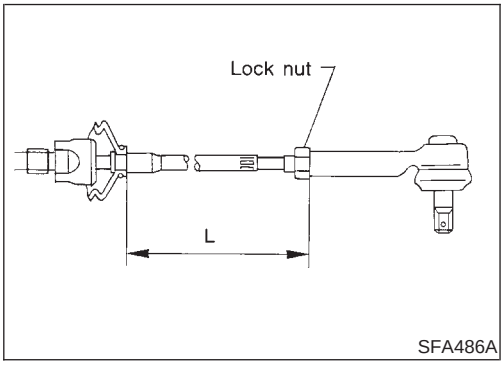

7. Adjust toe-in by varying the length of steering tie-rods.

a. Loosen lock nuts.

b. Adjust toe-in by screwing tie-rods in and out.

   Standard length "L":

   Refer to ST-30, "SDS".

c. Tighten lock nuts to specified torque.

   Lock nut tightening torque:

   Refer to ST-20, "POWER STEERING GEAR AND LINKAGE".

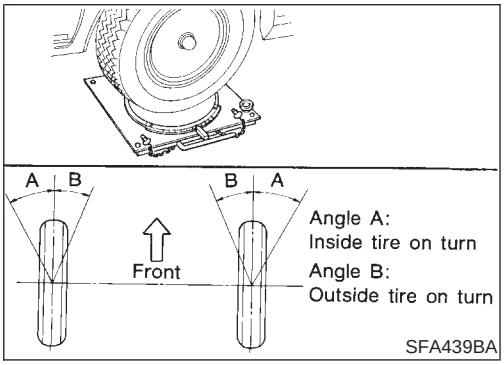

Front Wheel Turning Angle

NFSU0007S04

1. Set wheels in straight-ahead position. Then move vehicle forward until front wheels rest on turning radius gauge properly.
2. Rotate steering wheel all the way right and left; measure turning angle.

   Do not hold the steering wheel on full lock for more than 15 seconds.

   Wheel turning angle (Full turn):

   Refer to SDS, SU-16.

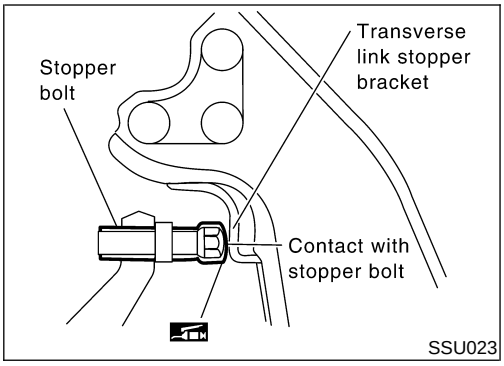

3. Check stopper bolt head to see whether it contacts stopper bracket at specified outside wheel angle. If not, adjust stopper bolt to contact stopper bracket at the correct angle.
   Adjust protrusion of stopper bolt before placing stopper bolt cap.
   Apply grease to face of stopper bracket that bolt touches.

Tighten stopper bolt lock nut.

: 54 - 72 N·m (5.5 - 7.3 kg-m, 40 - 53 ft-lb)

Coil Spring and Shock Absorber

COMPONENTS

=NFSU0008

SEC. 391•400•401

When installing rubber parts, final tightening must be carried out under unladen condition* with tires on ground.
*** Fuel, radiator coolant and engine oil full. Spare tire, jack, hand tools and mats in designated positions.**

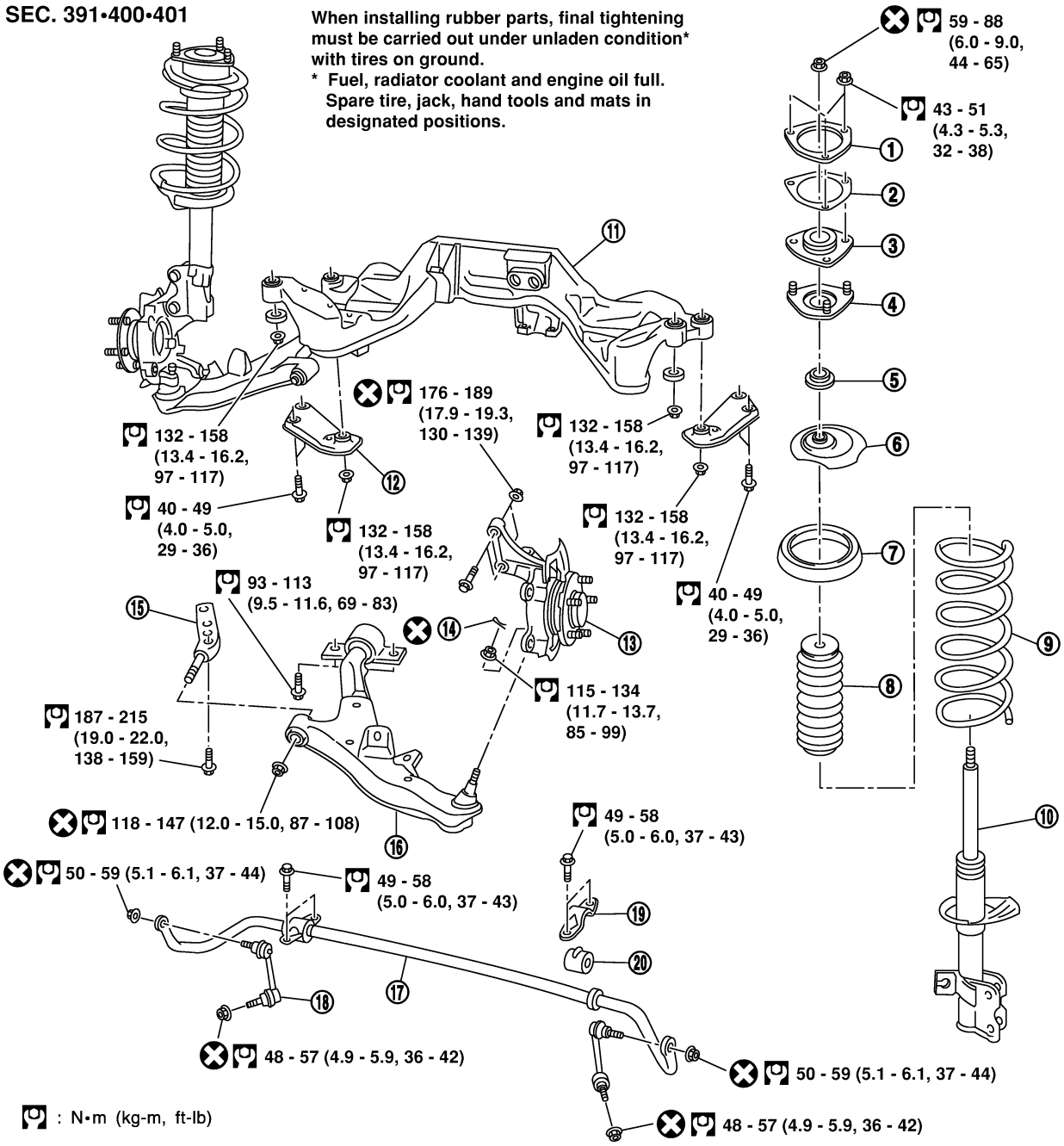

SSU011

1. Strut mount upper plate
2. Strut spacer
3. Strut mount insulator
4. Strut mount bracket
5. Strut mount bearing
6. Spring upper seat
7. Spring rubber seat
8. Bound bumper rubber
9. Coil spring
10. Shock absorber
11. Suspension member
12. Rebound stopper
13. Wheel hub and steering knuckle
14. Cotter pin
15. Bush link pin
16. Transverse link
17. Stabilizer
18. Connecting rod
19. Stabilizer clamp
20. Bushing

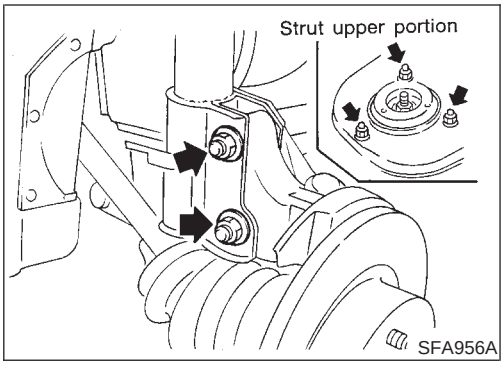

REMOVAL AND INSTALLATION

=NFSU0009

- Remove shock absorber fixing bolt and nut (to hoodledge).
- **Do not remove piston rod lock nut on vehicle.**

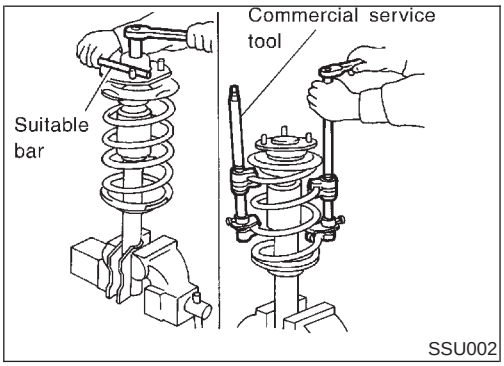

DISASSEMBLY

NFSU0010

1. Set shock absorber on vise, then **loosen** piston rod lock nut.
- **Do not remove piston rod lock nut at this time.**
2. Compress spring with Tool so that shock absorber mounting insulator can be turned by hand.

WARNING:

Make sure that the pawls of the two spring compressors are firmly hooked on the spring. The spring compressors must be tightened alternately so as not to tilt the spring.

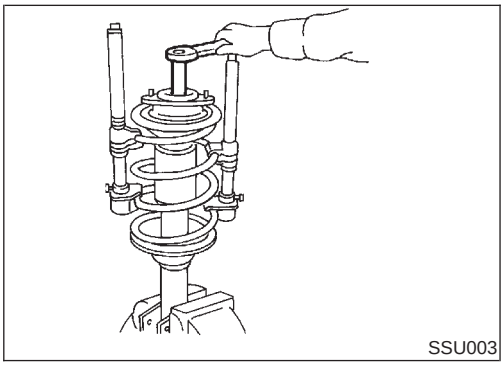

3. Remove piston rod lock nut.

INSPECTION

NFSU0011

Shock Absorber Assembly

NFSU0011S01

- Check for smooth operation through a full stroke, both compression and extension.
- Check for oil leakage on welded or gland packing portions.
- Check piston rod for cracks, deformation or other damage. Replace if necessary.

Mounting Insulator and Rubber Parts

NFSU0011S02

- Check cemented rubber-to-metal portion for separation or cracks. Check rubber parts for deterioration.
  Replace if necessary.

Thrust Bearing

NFSU0011S06

- Check thrust bearing parts for abnormal noise or excessive rattle in axial direction.
- Replace if necessary.

Coil Spring

NFSU0011S03

- Check for cracks, deformation or other damage. Replace if necessary.

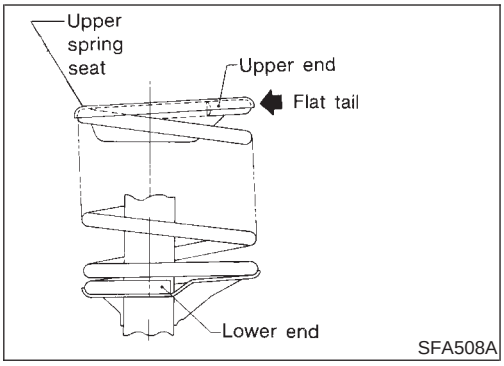

ASSEMBLY

NFSU0012

- When installing coil spring on strut, it must be positioned as shown in the figure at left.

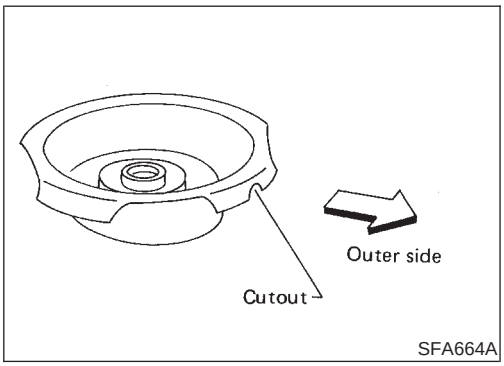

- Install upper spring seat with its cutout facing the outer side of vehicle.

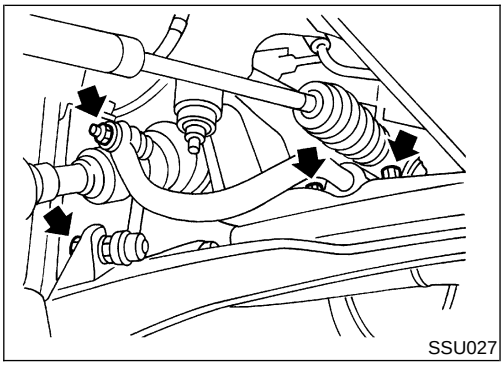

Stabilizer Bar

REMOVAL AND INSTALLATION

NFSU0017

- Remove stabilizer bar.

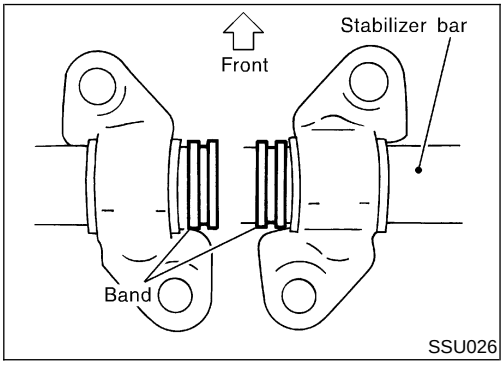

- When installing stabilizer, make sure that band and clamp face in their correct directions.

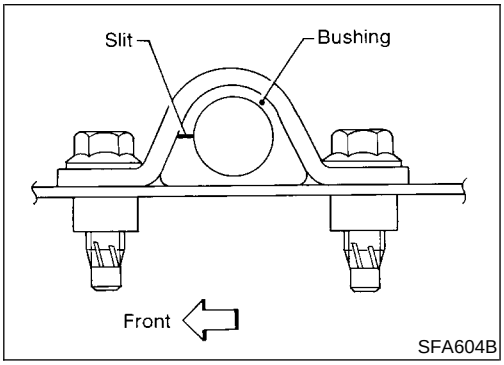

- Make sure that slit in bushing is in the position shown in the figure.

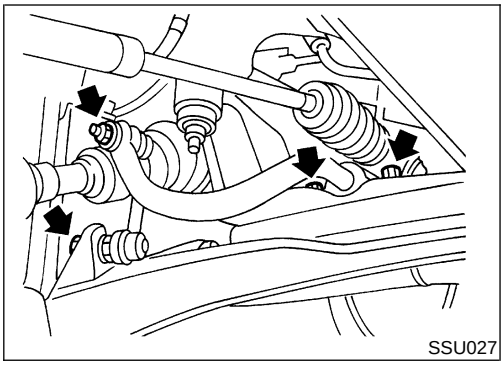
SSU027

- When removing and installing stabilizer bar.

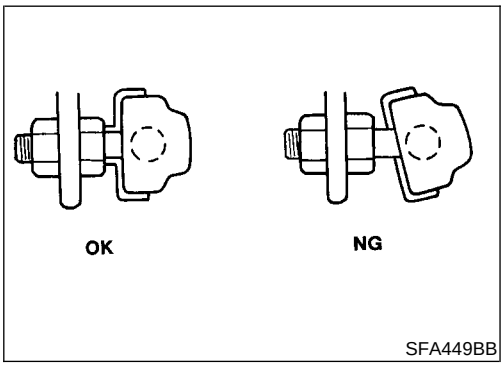

SFA449BB

- Install stabilizer bar with ball joint socket properly placed.

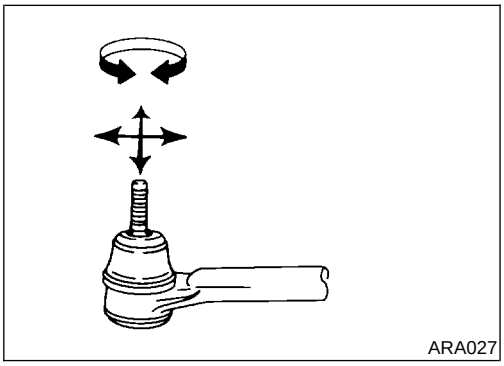
ARA027

- Check stabilizer for deformation or cracks. Replace if necessary.
- Check rubber bushings for deterioration or cracks. Replace if necessary.
- Check ball joint can rotate in all directions. If movement is not smooth and free, replace stabilizer bar connecting rod.

Transverse Link and Lower Ball Joint

REMOVAL AND INSTALLATION

NFSU0018

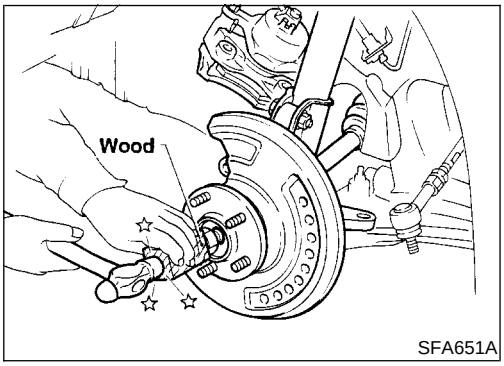

SFA651A

1. Remove wheel bearing lock nut.
2. Remove tie-rod ball joint.
3. Remove strut lower bracket fixing bolts and nuts.
4. Separate drive shaft from knuckle by slightly tapping drive shaft end.

Cover boots with shop towel so as not to damage them when removing drive shaft.

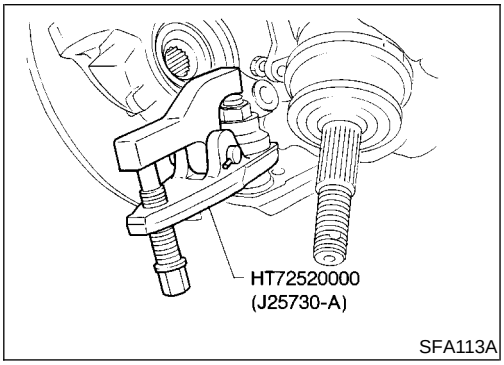

SFA113A

5. Separate lower ball joint stud from knuckle with suitable tool. Refer to AX-5, "FRONT AXLE — Wheel Hub and Knuckle".

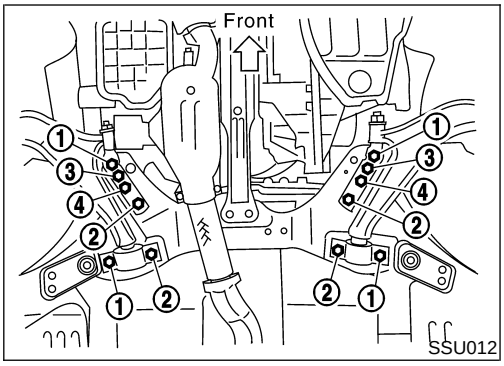

6. Remove fixing bolts.
7. Remove transverse link and lower ball joint.
8. Install fixing bolts in order of number.

   Tightening torque:

   Refer to "FRONT SUSPENSION", SU-6.
9. During installation, final tightening must be carried out at curb weight with tires on the ground.
10. After installation, check wheel alignment. Refer to "ON-VEHICLE SERVICE — Front Wheel Alignment", SU-6.

INSPECTION

NFSU0019

Transverse Link

NFSU0019S01

- Check transverse link for damage, cracks or deformation. Replace it if necessary.
- Check rubber bushing for damage, cracks and deformation. Replace transverse link if necessary.

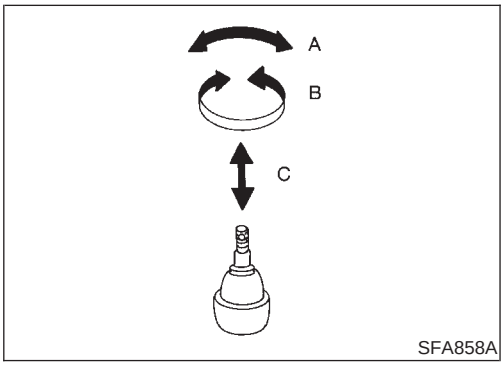

Lower Ball Joint

NFSU0019S02

- Check ball joint for play. Replace transverse link assembly if any of the following cases occur. Ball stud is worn, play in axial direction is excessive or joint is hard to swing.
  Before checking, turn ball joint at least 10 revolutions so that ball joint is properly broken in.

  Swinging force "A":

  (measuring point: cotter pin hole of ball stud):

  7.8 - 77.5 N (0.8 - 7.9 kg, 1.8 - 17.4 lb)

  Turning torque "B":

  0.50 - 4.90 N·m (5.1 - 50 kg-cm, 4.4 - 43.4 in-lb)

  Vertical end play "C":

  0 mm (0 in)
- Check dust cover for damage. Replace it and cover clamp if necessary.

Service Data and Specifications (SDS)

GENERAL SPECIFICATIONS (FRONT)

=NFSU0020

Suspension type	Independent MacPherson strut
Shock absorber type	Double-acting hydraulic
Stabilizer bar	Standard equipment

FRONT WHEEL ALIGNMENT (UNLADEN*1)

=NFSU0021

Tire size			225/50R17	215/55R16	205/65R15
Camber Degree minute (Decimal degree)		Minimum	−1°00′ (−1.00°)		−1°05′ (−1.08°)
		Nominal	−0°15′ (−0.25°)		−0°20′ (−0.33°)
		Maximum	0°30′ (0.50°)		0°25′ (0.42°)
		Left and right difference	45′ (0.75°) or less		
Caster Degree minute (Decimal degree)		Minimum	2°00′ (2.00°)		
		Nominal	2°45′ (2.75°)		
		Maximum	3°30′ (3.50°)		
		Left and right difference	45′ (0.75°) or less		
Kingpin inclination Degree minute (Decimal degree)		Minimum	13°30′ (13.50°)		13°35′ (13.58°)
		Nominal	14°15′ (14.25°)		14°20′ (14.33°)
		Maximum	15°00′ (15.00°)		15°05′ (15.08°)
Total toe-in	Distance (A − B) mm (in)	Minimum	0 (0)		
		Nominal	1 (0.04)		
		Maximum	2 (0.08)		
	Angle (left plus right) Degree minute (Decimal degree)	Minimum	0′ (0.00°)		
		Nominal	6′ (0.10°)		
		Maximum	12′ (0.20°)		
Wheel turning angle Full turn*2	Inside Degree minute (Decimal degree)	Minimum	29°30′ (29.50°)	36°00′ (36.0°)	
		Nominal	33°00′ (33.0°)	39°30′ (39.50°)	
		Maximum	34°00′ (34.0°)	40°30′ (40.50°)	
	Outside Degree minute (Decimal degree)	Nominal	28°30′ (28.50°)	32°00′ (32.00°)	

*1: Fuel, radiator coolant and engine oil full. Spare tire, jack, hand tools and mats in designated positions.

*2: On power steering models, wheel turning force (at circumference of steering wheel) of 98 to 147 N (10 to 15 kg, 22 to 33 lb) with engine idle.

LOWER BALL JOINT

NFSU0022

Swinging force "A" (Measuring point: cotter pin hole of ball stud) N (kg, lb)	7.8 - 77.5 (0.8 - 7.9, 1.8 - 17.4)
Turning torque "B" N·m (kg-cm, in-lb)	0.50 - 4.90 (5.1 - 50.0, 4.4 - 43.4)
Vertical end play "C" mm (in)	0 (0)

WHEELARCH HEIGHT (UNLADEN*)

=NFSU0041

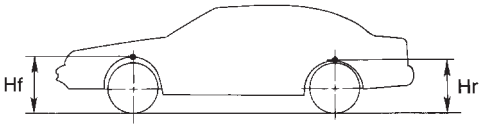

SFA818A

Applied model	Models with 225/50R17 tire	Models with 215/55R16 tire	Models with 205/65R15 tire
Front (Hf) mm (in)	706 (27.80)	698 (27.48)	700 (27.56)
Rear (Hr) mm (in)	694 (27.32)	683 (26.89)	690 (27.17)

*: Fuel, radiator coolant and engine oil full. Spare tire, jack, hand tools and mats in designated positions.

WHEEL RUNOUT

NFSU0023

Wheel type	Aluminum	Steel wheel
Radial runout limit mm (in)	0.3 (0.012)	0.5 (0.020)
Lateral runout limit mm (in)	0.3 (0.012)	0.8 (0.031)

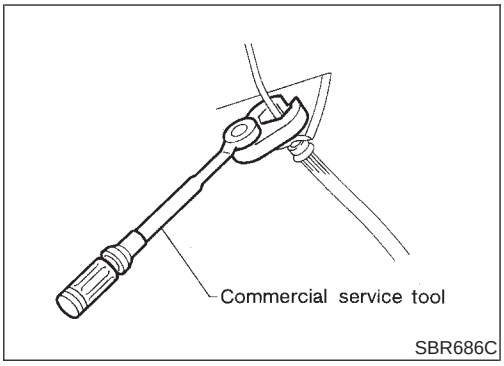

Precautions

PRECAUTIONS

NFSU0024

- **When installing each rubber part, final tightening must be carried out under unladen condition* with tires on ground. Oil will shorten the life of rubber bushes. Be sure to wipe off any spilled oil.**
  ***: Fuel, radiator coolant and engine oil full. Spare tire, jack, hand tools and mats in designated positions.**
- **Use flare nut wrench when removing or installing brake tubes.**
- **After installing removed suspension parts, check wheel alignment.**
- **Do not jack up at the trailing arm and lateral link.**
- **Always torque brake lines when installing.**
- **Lock nuts are unreusable parts; always use new ones. When replacing, do not wipe the oil off of the new lock nut before tightening.**

Preparation

COMMERCIAL SERVICE TOOLS

NFSU0026

Tool name	Description	
Equivalent to GG94310000 1 Flare nut crowfoot 2 Torque wrench	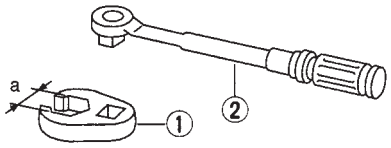 NT360	Removing and installing brake piping **a: 10 mm (0.39 in)**
Spring compressor	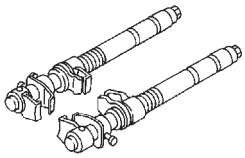 NT717	Removing and installing coil spring

Noise, Vibration and Harshness (NVH) Troubleshooting

NFSU0027

Refer to “Noise, Vibration and Harshness (NVH) Troubleshooting”, “FRONT SUSPENSION”, SU-4.

Components

NFSU0028

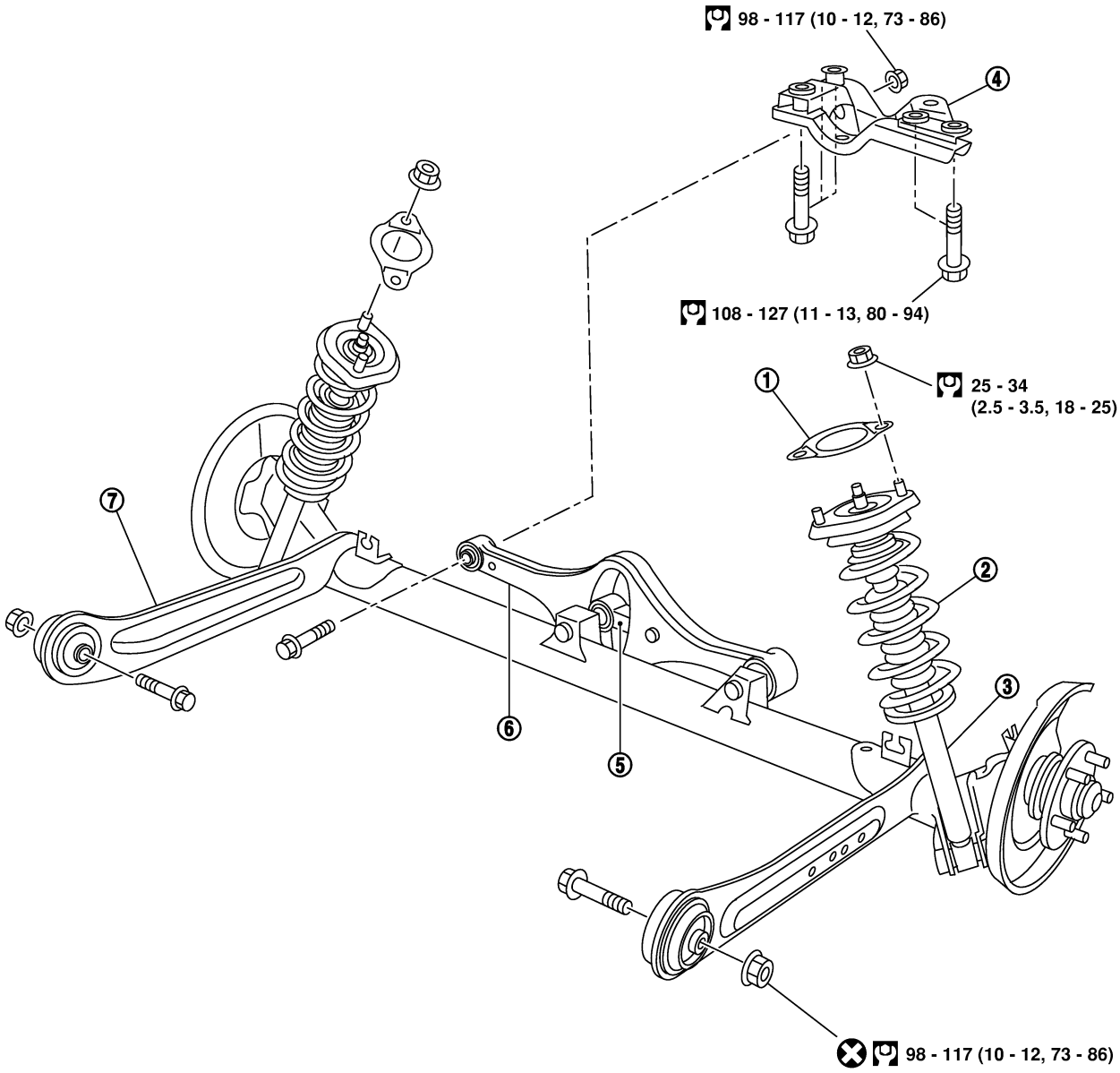

: N•m (kg-m, ft-lb)

SSU013

1. Shock absorber mounting seal
2. Coil spring
3. Shock absorber
4. Suspension member
5. Control rod
6. Lateral link
7. Torsion beam

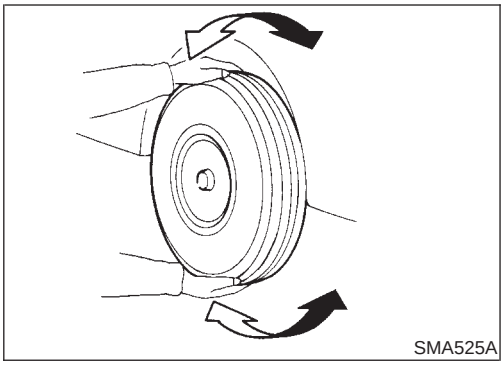

On-vehicle Service

REAR SUSPENSION PARTS

NFSU0029

Check axle and suspension parts for excessive play, wear or damage.

- Shake each rear wheel to check for excessive play.

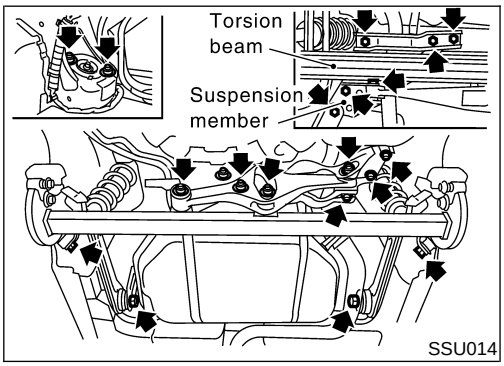

- Retighten all nuts and bolts to the specified torque.

  Tightening torque:

  Refer to “REAR SUSPENSION”, SU-19.

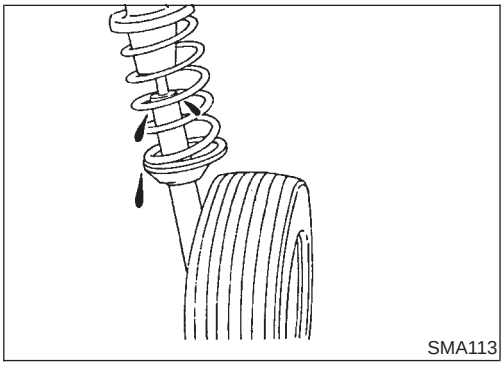

- Check shock absorber for oil leakage or other damage.
- Check wheelarch height. Refer to “On-vehicle Service”, “FRONT SUSPENSION PARTS”, SU-6.

REAR WHEEL ALIGNMENT

NFSU0030

Before checking rear wheel alignment, be sure to make a preliminary inspection (Unladen*).

*: Fuel, radiator coolant and engine oil full. Spare tire, jack, hand tools and mats in designated positions.

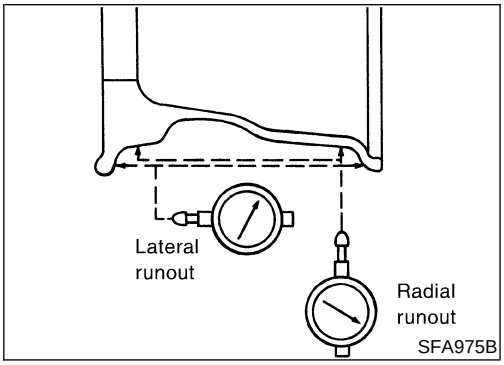

Preliminary Inspection

NFSU0030S01

Aluminum wheel

NFSU0030S0101

1. Check tires for wear and improper inflation.
2. Check wheels for deformation, cracks and other damage. If deformed, remove wheel and check wheel runout.

a. Remove tire from aluminum wheel and mount on a tire balance machine.

b. Set dial indicator as shown in the illustration.

   Wheel runout (Dial indicator value):

   Refer to SDS, SU-17.

3. Check front wheel bearings for looseness.
4. Check front suspension for looseness.
5. Check steering linkage for looseness.
6. Check that front shock absorbers work properly.
7. Check vehicle posture (Unladen).

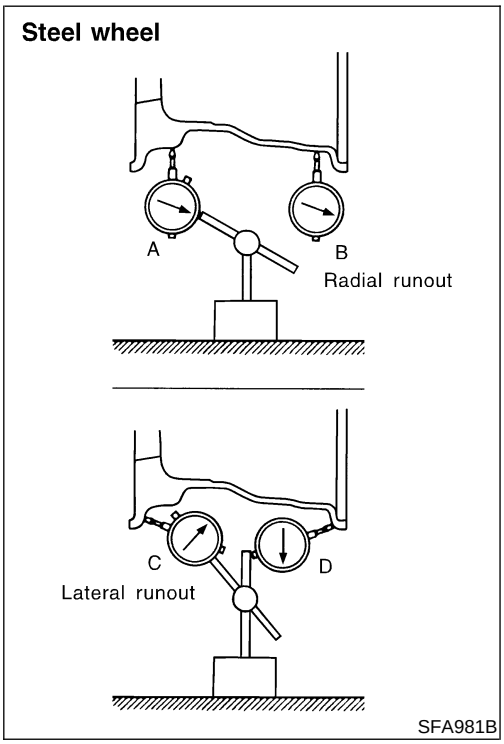

Steel wheel

NFSU0030S0102

1. Check tires for wear and improper inflation.
2. Check wheels for deformation, cracks and other damage.
   If deformed, remove wheel and check wheel runout.

a. Remove tire from steel wheel and mount wheel on a tire balance machine.
b. Set two dial indicators as shown in the illustration.
c. Set each dial indicator to 0.
d. Rotate wheel and check dial indicators at several points around the circumference of the wheel.
e. Calculate runout at each point as shown below.
   Radial runout = (A + B)/2
   Lateral runout = (C + D)/2
f. Select maximum positive runout value and the maximum negative value.
   Add the two values to determine total runout.
   In case a positive or negative value is not available, use the maximum value (negative or positive) for total runout.
   If the total runout value exceeds the limit, replace steel wheel.

   Wheel runout:

   Refer to SDS, SU-17.

3. Check front wheel bearings for looseness.
4. Check front suspension for looseness.
5. Check steering linkage for looseness.
6. Check that front shock absorbers work properly.
7. Check vehicle posture (Unladen).

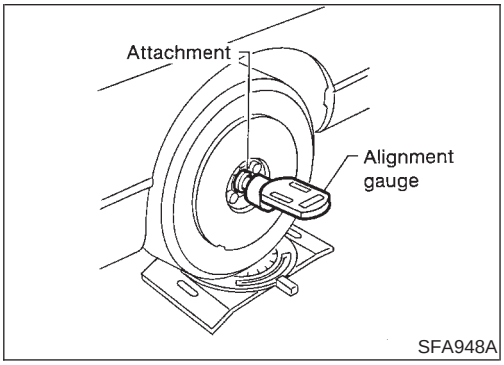

Camber

NFSU0030S02

Camber is preset at factory and cannot be adjusted.

Camber:

Refer to SDS, SU-28.

- If the camber is not within specification, inspect and replace any damaged or worn rear suspension parts.

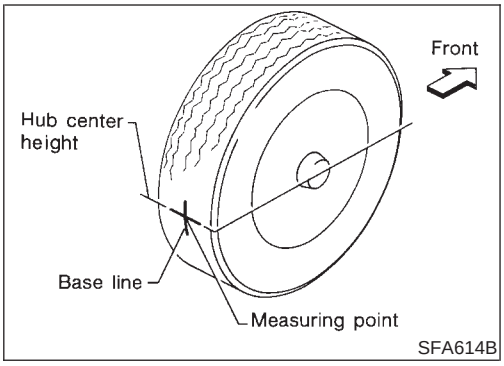

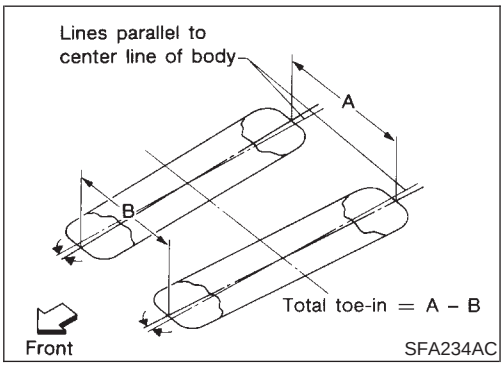

Toe-in

NFSU0030S03

Toe-in is preset at factory and cannot be adjusted.

Measure toe-in using following procedure. If out of specification, inspect and replace any damaged or worn rear suspension parts.

WARNING:

- **Perform following procedure always on a flat surface.**
- **Make sure that no person is in front of the vehicle before pushing it.**

1. Bounce rear of vehicle up and down to stabilize the posture.
2. Push the vehicle straight ahead about 5 m (16 ft).
3. Put a mark on base line of the tread (rear side) of both tires at the same height of hub center. This mark is a measuring point.
4. Measure distance "A" (rear side).
5. Push the vehicle slowly ahead to rotate the wheels 180 degrees (1/2 turn).

If the wheels have rotated more than 180 degrees (1/2 turn), try the above procedure again from the beginning. Never push vehicle backward.

6. Measure distance "B" (front side).

Total toe-in: A − B

Refer to SDS, SU-28.

Removal and Installation

NFSU0031

SEC. 431

When installing each rubber part, final tightening must be carried out under unladen condition* with tires on ground.
*** Fuel, radiator coolant and engine oil full.**
Spare tire, jack, hand tools and mats in designated positions.

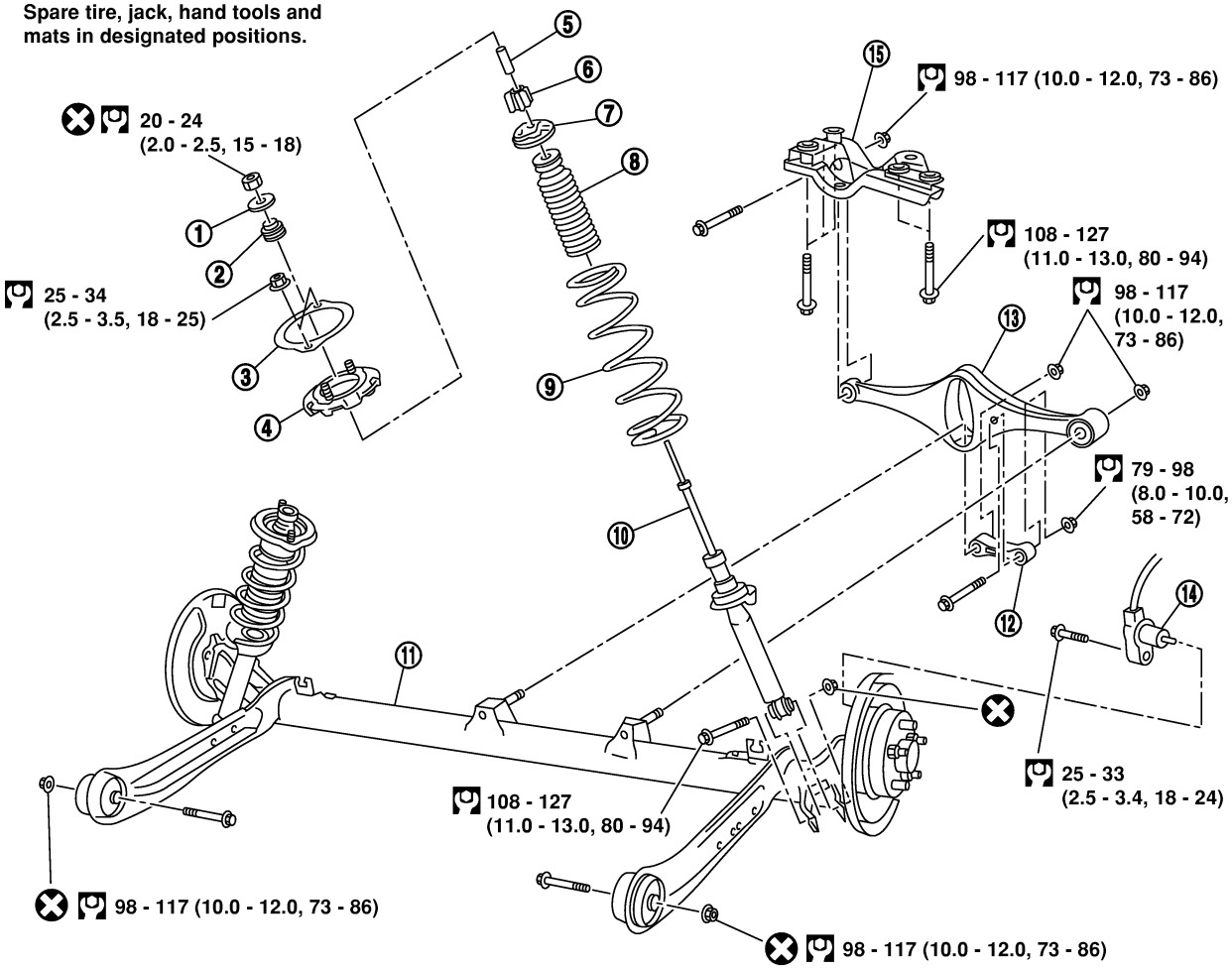

: N•m (kg-m, ft-lb)

SSU015

1. Washer
2. Bushing
3. Shock absorber mounting seal
4. Shock absorber mounting bracket
5. Distance tube
6. Bushing
7. Bound bumper cover
8. Bound bumper
9. Coil spring
10. Shock absorber
11. Torsion beam
12. Control rod
13. Lateral link
14. ABS sensor
15. Suspension member

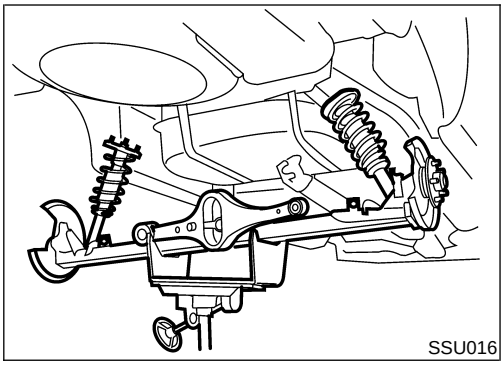
SSU016

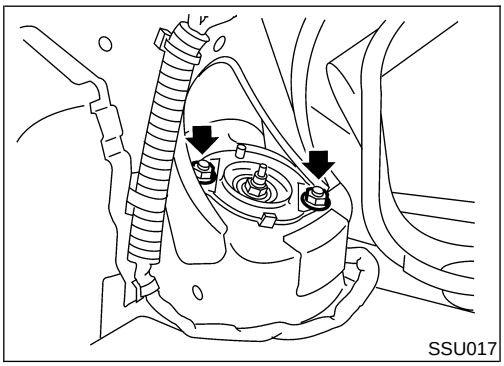
SSU017

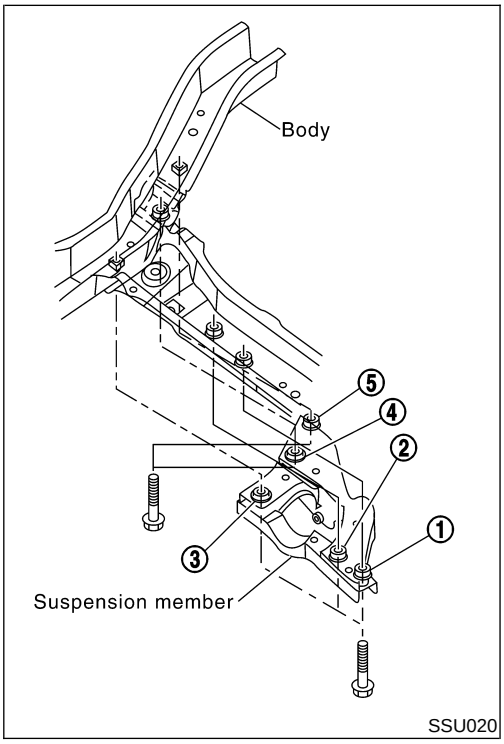

SSU020

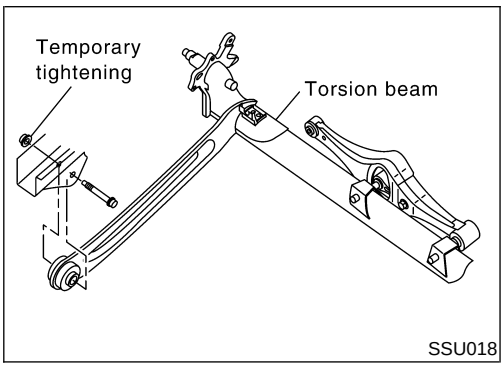

SSU018

REMOVAL

NFSU0031S01

CAUTION:

- **Before removing the rear suspension assembly, disconnect the ABS wheel sensor from the assembly. Failure to do so may result in damage to the sensor wires and the sensor becoming inoperative.**
- Remove suspension assembly.

1. Remove tires, then remove brake hose lock plate.
2. Disconnect parking brake cable from caliper and remove brake caliper and rotor.

Suspend caliper assembly with wire so as not to stretch brake hose.
Be careful not to depress brake pedal, or piston will pop out.
Make sure brake hose is not twisted.

3. Using a transmission jack, raise torsion beam a little, and remove nuts and bolts from the trailing arm, shock absorber assembly (lower side) and lateral link.
4. Lower transmission jack, and remove suspension.
5. Remove trunk room trim. Refer to BT-39, "Trunk Room", "INTERIOR TRIM".
6. Remove strut securing nuts (upper side). Then pull out strut assembly.

INSTALLATION

NFSU0031S02

- Install suspension assembly.

CAUTION:

Refill with new brake fluid "DOT 3".
Never reuse drained brake fluid.

1. Install suspension member.

a. Temporarily tighten bolt 5.
b. Tighten all bolts in numerical order shown in the figure.

Tightening torque:
Refer to SU-23.

2. Attach control rod to lateral link. Do not tighten bolts at this time.
3. Attach lateral link, control rod and torsion beam to vehicle. Do not tighten bolts at this time.

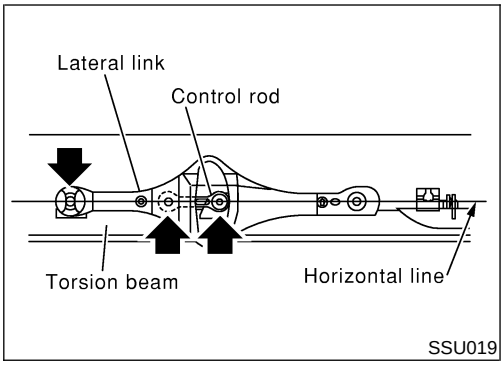

4. Using a transmission jack to lift the torsion beam, place lateral link and control rod horizontally against torsion beam. Tighten bolts and nuts to specified torque.

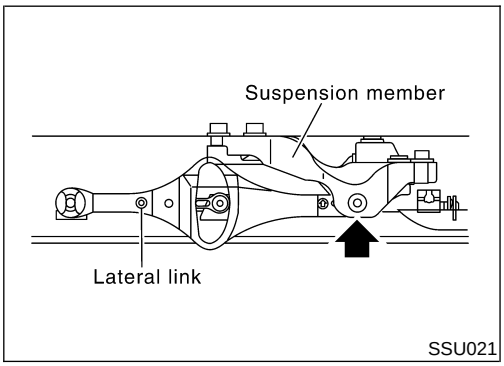

5. Tighten lateral link at suspension member.
6. Attach shock absorber assembly to vehicle. Then tighten the upper side of shock absorber assembly.
7. Remove transmission jack and lower torsion beam so that the shock absorber assembly reaches full extension. Tighten torsion beam and lower side of shock absorber assembly to specified torque.

Coil Spring and Shock Absorber

REMOVAL AND INSTALLATION

NFSU0032

Remove shock absorber upper and lower fixing nuts.
Do not remove piston rod lock nut on vehicle.

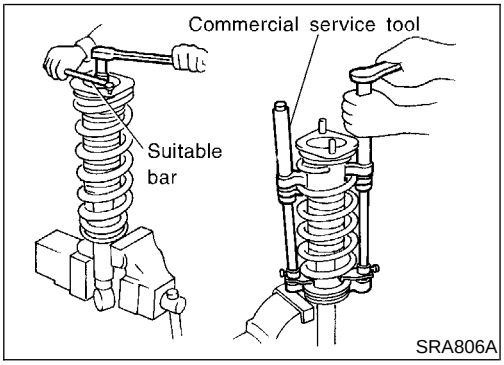

DISASSEMBLY

NFSU0033

1. Set shock absorber in vise, then **loosen** piston rod lock nut. **Do not remove piston rod lock nut at this time.**
2. Compress spring with Tool so that the shock absorber upper spring seat can be turned by hand.

WARNING:
Make sure that the pawls of the two spring compressors are firmly hooked on the spring. The spring compressors must be tightened alternately so as not to tilt the spring.

3. Remove piston rod lock nut.

INSPECTION

NFSU0034

Shock Absorber Assembly

NFSU0034S01

- Check for smooth operation through a full stroke, both compression and extension.
- Check for oil leakage on welded or gland packing portions.
- Check piston rod for cracks, deformation or other damage. Replace if necessary.

Upper Rubber Seat and Bushing

NFSU0034S02

Check rubber parts for deterioration or cracks.
Replace if necessary.

Coil Spring

NFSU0034S03

Check for cracks, deformation or other damage. Replace if necessary.

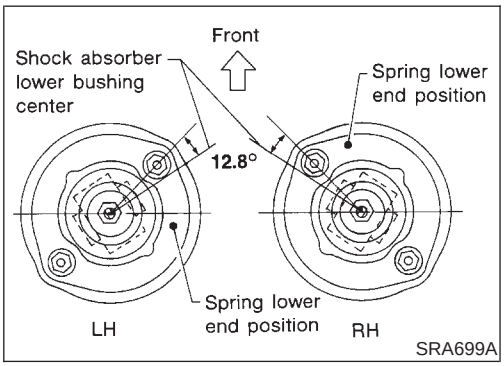

ASSEMBLY

NFSU0035

- Locate upper spring seat as shown.

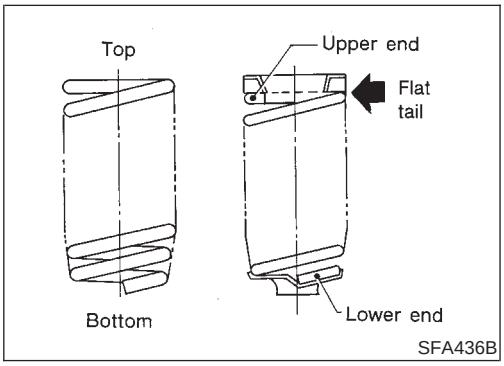

- When installing coil spring, be careful not to reverse top and bottom direction. (Top end is flat.)
- When installing coil spring on shock absorber, it must be positioned as shown in figure at left.

CAUTION:
Do not reuse piston rod lock nut.

Torsion Beam, Lateral Link and Control Rod

DISASSEMBLY

NFSU0036

- Remove torsion beam assembly. Refer to "Removal and Installation", "REAR SUSPENSION", SU-24.
- Remove lateral link and control rod from torsion beam.

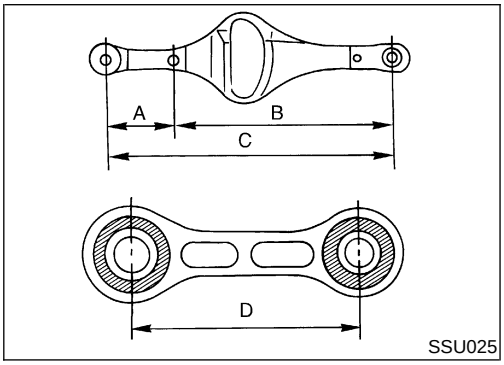

INSPECTION

NFSU0037

- Check for cracks, distortion or other damage. Replace if necessary.

  Standard length:

  A 206.5 - 208.5 mm (8.13 - 8.21 in)
  B 393.5 - 395.5 mm (15.49 - 15.57 in)
  C 600 - 604 mm (23.62 - 23.78 in)
  D 106 - 108 mm (4.17 - 4.25 in)

- Check all rubber parts for wear, cracks or deformation. Replace if necessary.

ASSEMBLY

NFSU0038

1. Temporarily assemble lateral link and control rod.
- When installing the control rod, connect the bush with the smaller inner diameter to the lateral link.

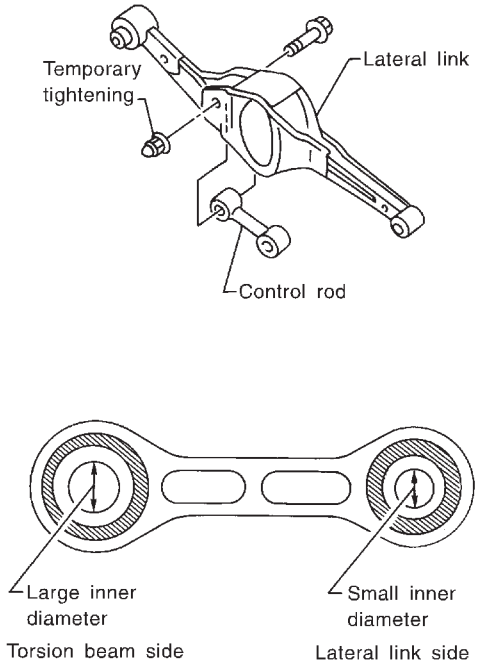

SRA793A

2. Temporarily install lateral link and control rod on torsion beam.
- When installing, place lateral link with the arrow topside.

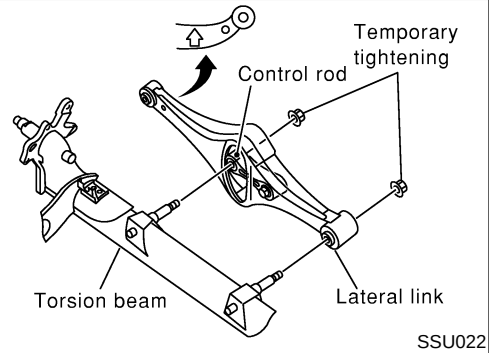

SSU022

3. Place lateral link and control rod horizontally against torsion beam, and tighten to the specified torque.
4. Install torsion beam assembly. Refer to "Removal and Installation", "REAR SUSPENSION", SU-24.

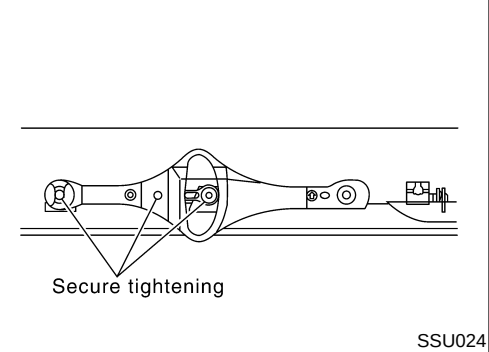

SSU024

Service Data and Specifications (SDS)

GENERAL SPECIFICATIONS (REAR)

=NFSU0039

Suspension type	Multi-link beam suspension
Shock absorber type	Double-acting hydraulic

REAR WHEEL ALIGNMENT (UNLADEN*)

NFSU0040

Camber Degree minute (Decimal degree)		Minimum	−1°45′ (−1.75°)
		Nominal	−1°00′ (−1.00°)
		Maximum	−0°15′ (−0.25°)
Total toe-in	Distance (A − B) mm (in)	Minimum	−3 (−0.12)
		Nominal	1 (0.04)
		Maximum	5 (0.20)
	Angle (left plus right) Degree minute (Decimal degree)	Minimum	−16′ (−0.27°)
		Nominal	5′30″ (0.09°)
		Maximum	26′ (0.43°)

*: Fuel, radiator coolant and engine oil full. Spare tire, jack, hand tools and mats in designated positions.