# SECTION LU
# ENGINE LUBRICATION SYSTEM



## CONTENTS

# PRECAUTIONS

PFP:00001

## Precautions for Liquid Gasket

EBS00RDL

### REMOVAL OF LIQUID GASKET SEALING

- After removing nuts and bolts, separate the mating surface, using Tool and remove old liquid gasket sealing.

**Tool number : KV10111100 (J-37228)**

**CAUTION:**
**Be careful not to damage the mating surfaces.**

- Tap Tool to insert it, and then slide it by tapping on the side as shown.
- In areas where Tool is difficult to use, use plastic hammer to lightly tap the parts, to remove it.

**CAUTION:**
**If for some unavoidable reason suitable tool such as screwdriver is used, be careful not to damage the mating surfaces.**

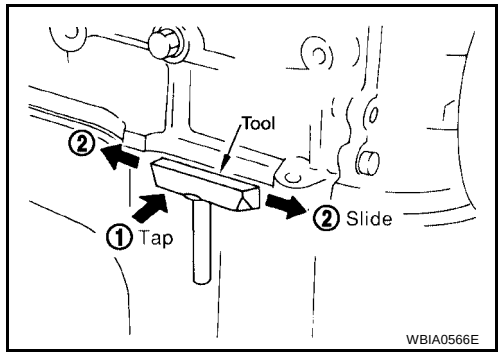


### LIQUID GASKET APPLICATION PROCEDURE

1. Remove old liquid gasket adhering to the liquid gasket application surface and the mating surface, using scraper.
   - Remove liquid gasket completely from the groove of the liquid gasket application surface, bolts, and bolt holes.
2. Thoroughly clean the mating surfaces and remove adhering moisture, grease and foreign materials.

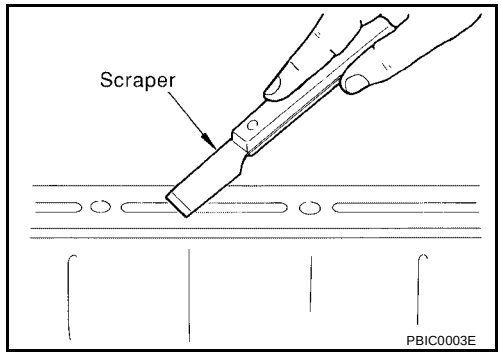


3. Attach liquid gasket tube to Tool.

**Tool number : WS39930000 ( — )**

**Use Genuine RTV Silicone Sealant or equivalent. Refer to** **GI-45, "Recommended Chemical Products and Sealants"** **.**

4. Apply liquid gasket without breaks to the specified location with the specified dimensions.
   - If there is a groove for the liquid gasket application, apply liquid gasket to the groove.

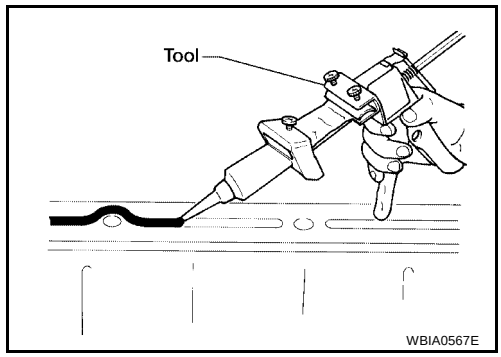


   - As for the bolt holes, normally apply liquid gasket inside the holes. Occasionally, it should be applied outside the holes. Make sure to read the text of service manual.
   - Within five minutes of liquid gasket application, install the mating component.
   - If liquid gasket protrudes, wipe it off immediately.
   - Do not retighten nuts or bolts after the installation.
   - After 30 minutes or more have passed from the installation, fill engine oil and engine coolant.

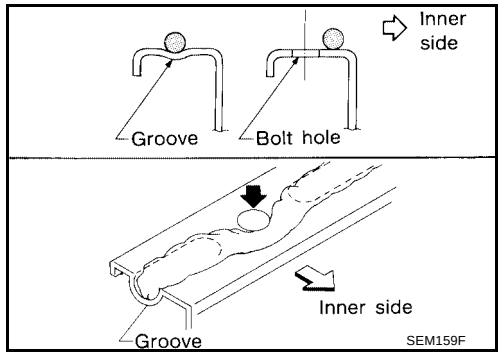


**CAUTION:**
**If there are specific instructions in this manual, observe them.**

# PREPARATION

PFP:00002

## Special Service Tools

EBS00RDM

The actual shapes of Kent-Moore tools may differ from those of special service tools illustrated here.

| Tool number<br>(Kent-Moore No.)<br>Tool name | | Description |
|---|---|---|
| ST25051001<br>(J-25695-1)<br>Oil pressure gauge | 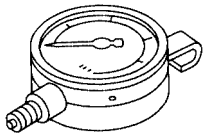 <br>NT050 | Measuring oil pressure<br>**Maximum measuring range: 2,452 kPa (25 kg-cm$^2$ , 356 psi)** |
| ST25052000<br>(J-25695-2)<br>Hose | 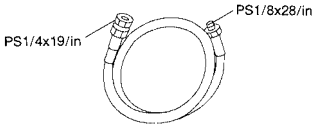 \\><br>S-NT559 | Adapting oil pressure gauge to upper oil pan |
| KV10115801<br>(J-38956)<br>Oil filter wrench | 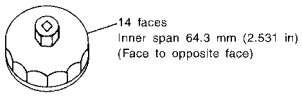 \\><br>S-NT772 | Removing and installing oil filter |
| KV10111100<br>(J-37228)<br>Seal cutter | 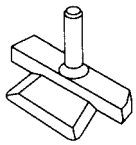 <br>S-NT046 | Removing steel oil pan and rear timing chain case |
| WS39930000<br>(　　—　　)<br>Tube presser | 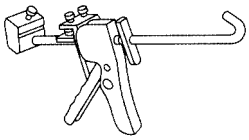 <br>NT052 | Pressing the tube of liquid gasket |

## Commercial Service Tool

EBS00RDN

| Tool name | Description |
|---|---|
| Deep socket 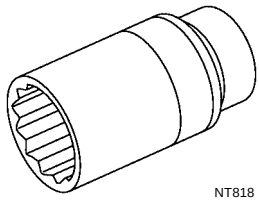 NT818 | Removing and installing oil pressure switch<br>Deep socket 26 mm, 3/8 drive |
| Power tools 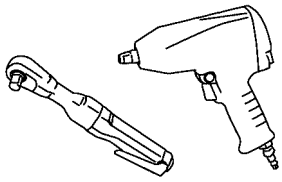 PBIC0190E | Loosening nuts and bolts |

# LUBRICATION SYSTEM

PFP:15010

## Lubrication Circuit

EBS00RDO

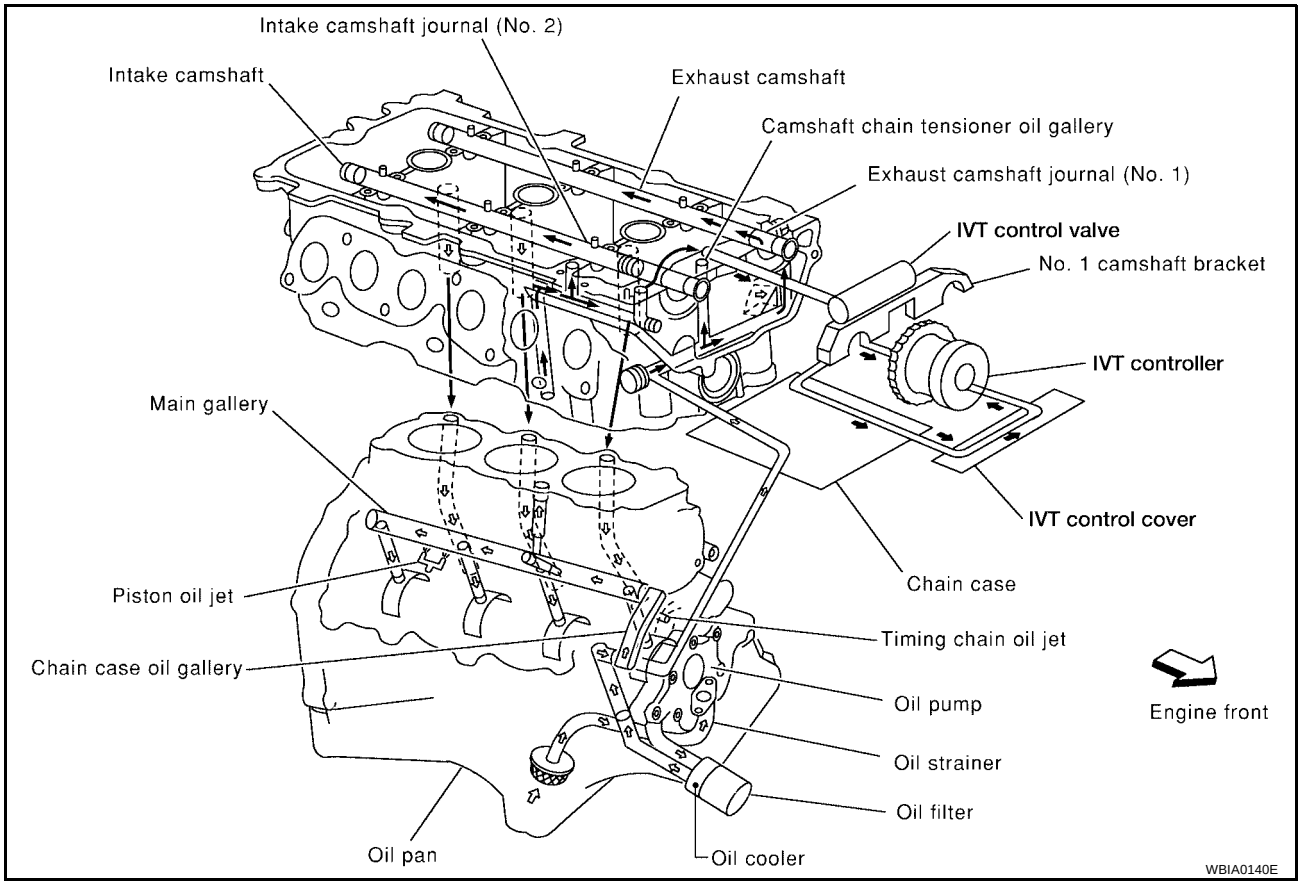

## System Drawing

EBS00RDP

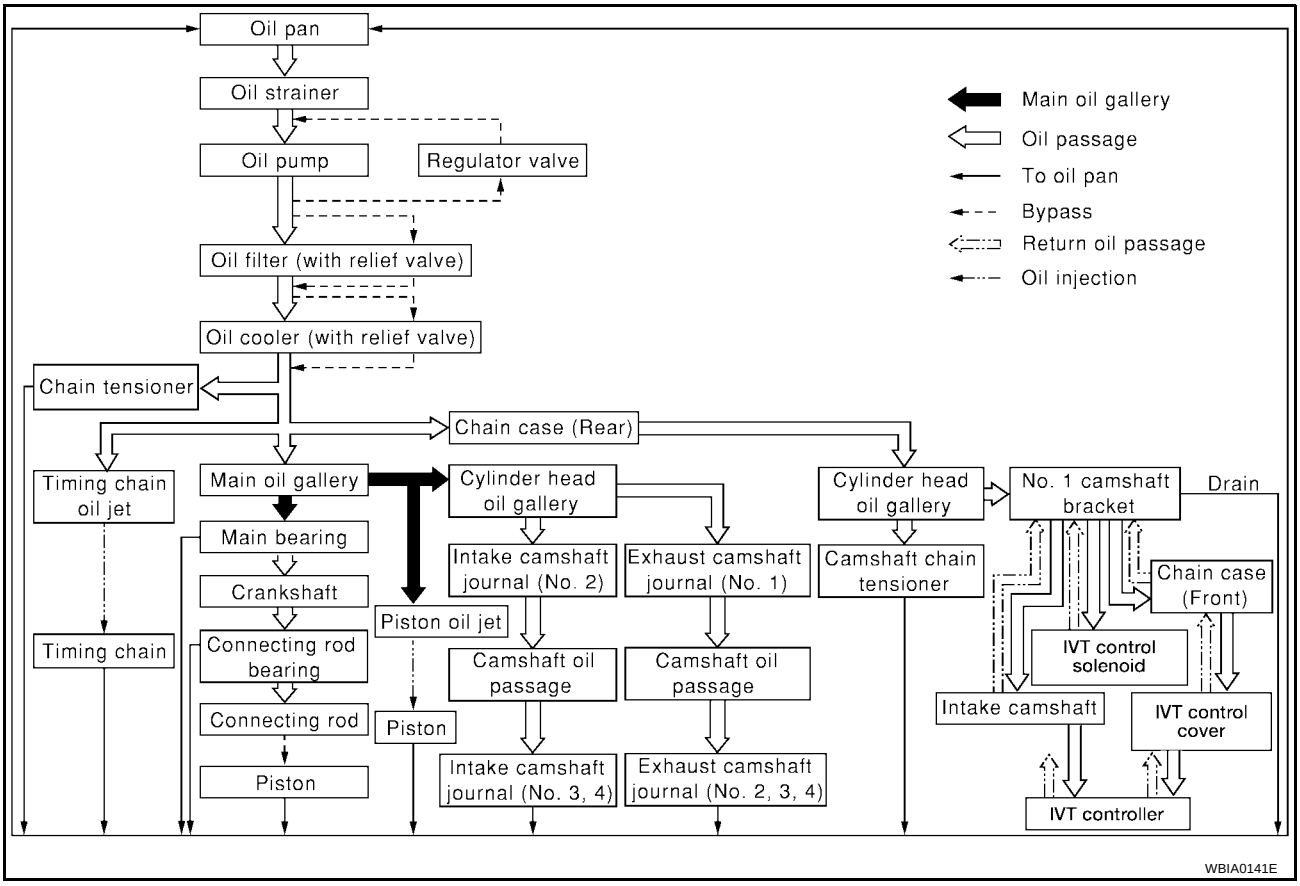

# ENGINE OIL

PFP:KLA92

## Inspection

EBS00RDQ

### OIL LEVEL

**NOTE:**

- Before starting the engine, check the oil level. If the engine is already started, stop it and allow 10 minutes before checking.
- Check that the oil level is within the range as indicated on the dipstick.
- If it is out of range, add oil as necessary. Refer to MA-9, "Fluids and Lubricants" .

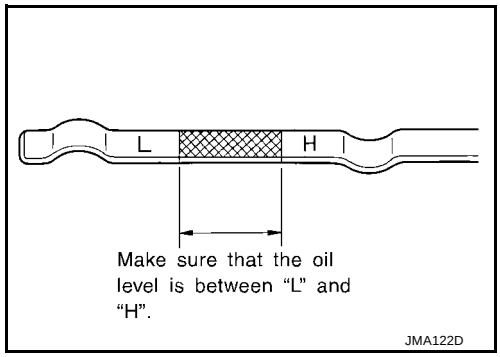


### ENGINE OIL APPEARANCE

- Check engine oil for white milky or excessive contamination.
- If engine oil becomes milky, it is highly probable that it is contaminated with engine coolant. Repair or replace damaged parts.

### OIL LEAKAGE

Check for oil leakage around the following areas:

- Oil pan
- Oil pan drain plug
- Oil pressure sensor
- Oil filter
- Oil cooler
- IVTC cover
- Intake valve timing control cover
- Front cover
- Mating surface between cylinder block and cylinder head
- Mating surface between cylinder head and rocker cover
- Crank oil seal (front and rear)

## OIL PRESSURE CHECK

**WARNING:**

- **Be careful not to burn yourself, as engine oil may be hot.**
- **For M/T models, put the gearshift lever in the Neutral "N" position. For A/T models, put the selector lever in the Park “P” position.**

1. Check the oil level.
2. Disconnect oil pressure switch harness connector.
3. Remove oil pressure sensor.
4. Install the pressure gauge.
5. Start the engine and warm it up to normal operating temperature.
6. Check oil pressure with engine running under no-load, using Tool

**Tool numbers : ST25051001 (J-25695-1)**
**: ST25052000 (J-25695-2)**

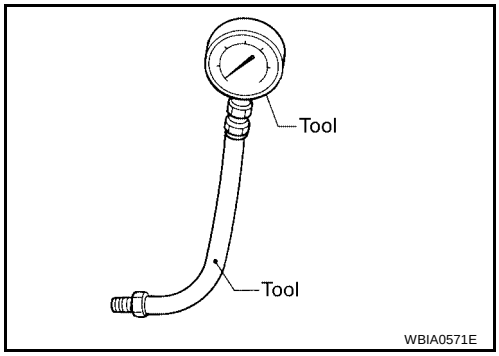


| Engine speed rpm | Approximate discharge pressure kPa (kg/cm$^2$ , psi) |
|---|---|
| Idle speed | More than 98 (1.0, 14) |
| 2,000 | 294 (3.0, 43) |

**If difference is extreme, check oil passage and oil pump for oil leaks.**

7. After the inspections, install the oil pressure switch as follows:

a. Remove the old sealant adhering to switch and engine.

b. Apply thread sealant and tighten the oil pressure switch to specification.
**Use Genuine High Performance Thread Sealant, or equivalent. Refer to** **GI-45, "Recommended Chemical Products and Sealants"** **.**

**Oil pressure switch : 14.7 N·m (1.5 kg-m, 11 ft-lb)**

## Changing Engine Oil

EBS00RDR

**WARNING:**

- **Be careful not to burn yourself, as the engine oil may be hot.**
- **Prolonged and repeated contact with used engine oil may cause skin cancer; try to avoid direct skin contact with used oil. If skin contact is made, wash thoroughly with soap or hand cleaner as soon as possible.**

1. Position the vehicle so it is level on the hoist.
2. Warm up the engine and check for oil leaks from the engine.
3. Stop engine and wait for 10 minutes.
4. Remove the oil pan drain plug and oil filler cap.
5. Drain the engine oil.
6. Install the oil pan drain plug with a new washer and refill the engine with new engine oil.

**Oil pan drain plug : 34.3 N·m (3.5 kg-m, 25 ft-lb)**

- Refer to MA-9, "Fluids and Lubricants" .

**Oil Capacity (Approximate)**

| | | |
|---|---|---|
| Drain and refill | With oil filter change | Approximately 4.2 ℓ (4 1/2 qt., 3 3/4 imp qt) |
| | Without oil filter change | Approximately 4.0 ℓ (4 1/4 qt., 3 1/2 imp qt.) |
| Dry engine (engine overhaul) | | Approximately 4.6 ℓ (4 7/8 qt., 4.0 imp qt.) |

**CAUTION:**

- **Be sure to clean the oil pan drain plug and install with a new washer.**

- **The refill capacity depends on the oil temperature and drain time. Use these specifications for reference only. Always use the dipstick to determine when the proper amount of oil is in the engine.**

7. Warm up the engine and check around the oil pan drain plug and oil filter for oil leaks.
8. Stop engine and wait for 10 minutes.
9. Check the engine oil level using the dipstick.

   **CAUTION:**
   **Do not overfill the engine oil.**

# OIL FILTER

PFP:15208

## Removal and Installation

EBS00RDS

### REMOVAL

1. Remove the oil filter using Tool as shown.

   **Tool number : KV10115801 (J-38956)**

   **CAUTION:**
   - **Be careful not to get burned, the engine oil may be hot.**
   - **When removing, prepare a shop cloth to absorb any oil leakage or spillage.**
   - **Do not allow engine oil to adhere to the drive belts.**
   - **Completely wipe off any oil that adheres to the engine and the vehicle.**

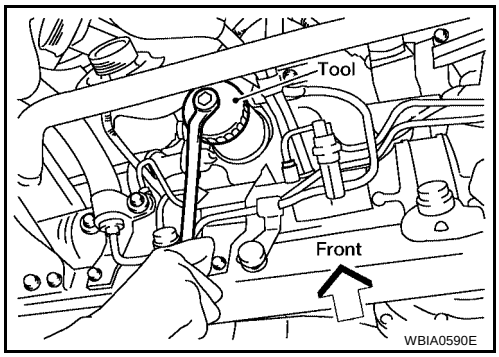


   - **The oil filter is provided with a relief valve. Use a genuine NISSAN oil filter or equivalent**

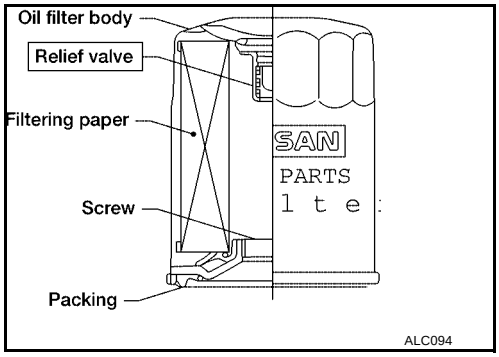


### INSTALLATION

1. Remove foreign materials adhering to the oil filter installation surface.
2. Apply clean engine oil to the oil seal contact surface of the new oil filter.

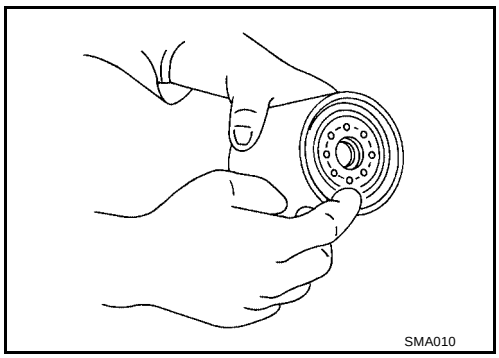


3. Screw the oil filter manually until it touches the installation surface, then tighten it by turning another 2/3 turn, or tighten to specification.

   **Oil filter : 17.6 N·m (1.8 kg-m, 13 ft-lb)**

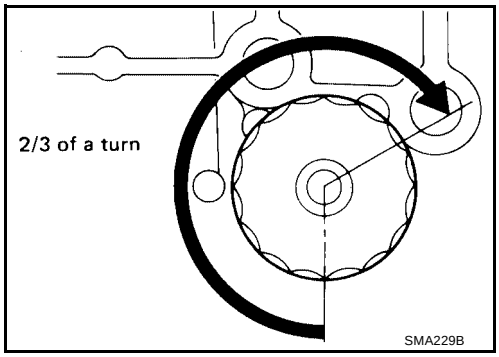


4. Check the oil level and add engine oil as necessary. Refer to LU-7, "ENGINE OIL" .
5. After warming up the engine, check for any engine oil leaks.

# OIL PUMP

PFP:15010

## Removal and Installation

EBS00RDT

### REMOVAL

1. Remove the timing chain. Refer to EM-55, "TIMING CHAIN" .
2. Remove oil pump assembly.

### INSTALLATION

- Installation is in the reverse order of removal.

## Disassembly and Assembly

EBS00RDU

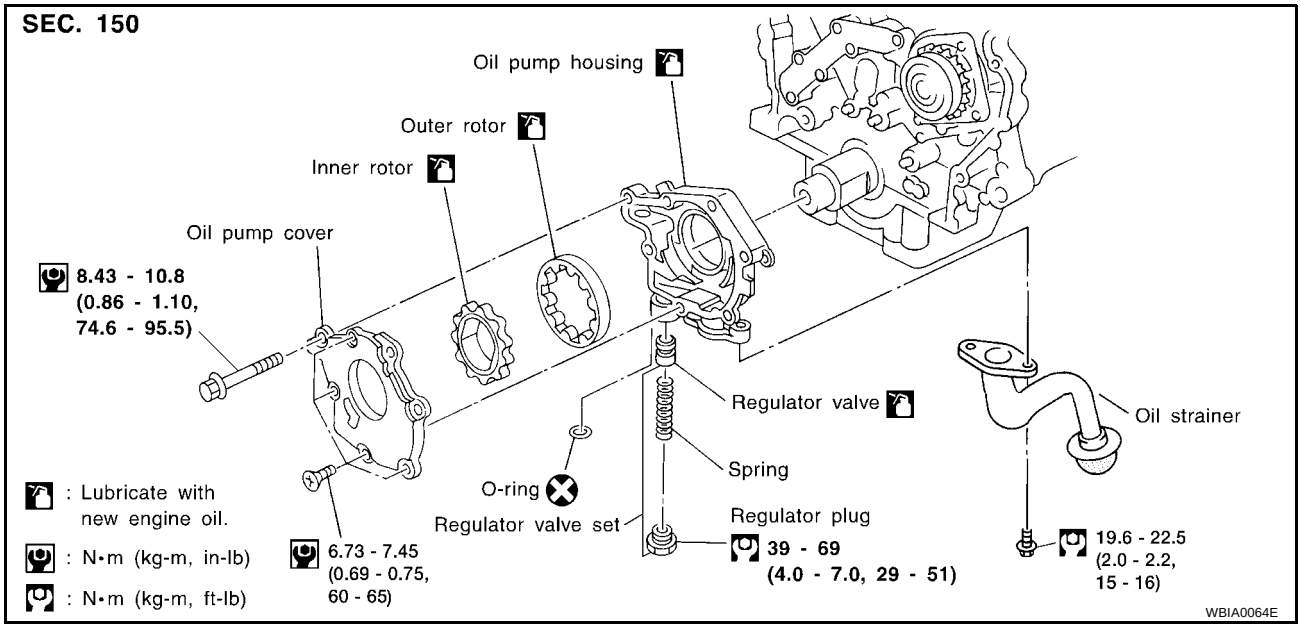


- **Disassemble as shown.**
- **Assembly is in the reverse order of Disassembly. When assembling the oil pump, apply engine oil to the rotors.**

### INSPECTION AFTER DISASSEMBLY

#### Clearance of Oil Pump Parts

- Measure clearance with feeler gauge.
  Clearance between outer rotor and oil pump body (position 1)

  **Standard : 0.114 - 0.200 mm (0.0045 - 0.0079 in)**

  Tip clearance between inner rotor and outer rotor (position 2)

  **Standard : Below 0.180 mm (0.0071 in)**

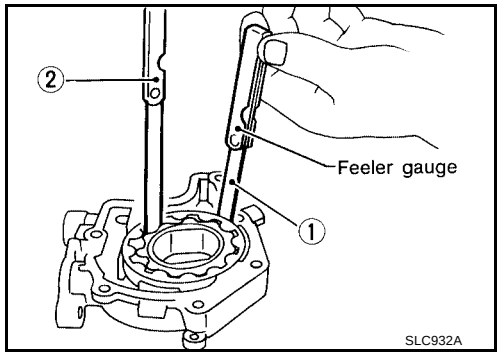

- Measure clearance with feeler gauge and straightedge.
  Side clearance between inner rotor and oil pump body (position 3).

  **Standard : 0.030 - 0.070 mm (0.0012 - 0.0028 in)**

  Side clearance between outer rotor and oil pump body (position 4).

  **Standard : 0.050 - 0.110 mm (0.0020 - 0.0043 in)**

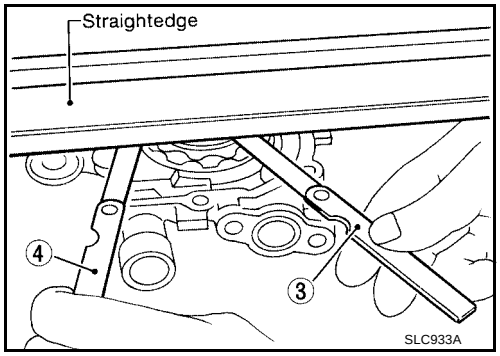


- Calculate the clearance between inner rotor and oil pump body as follows.

1. Measure the outer diameter of protruded portion of inner rotor (position A).
2. Measure the inner diameter of oil pump body with inside micrometer (position B).
   (clearance 5) = (inner diameter of oil pump body B) – (outer diameter of inner rotor A)

   **Standard : 0.045 - 0.091 mm (0.0018 - 0.0036 in)**

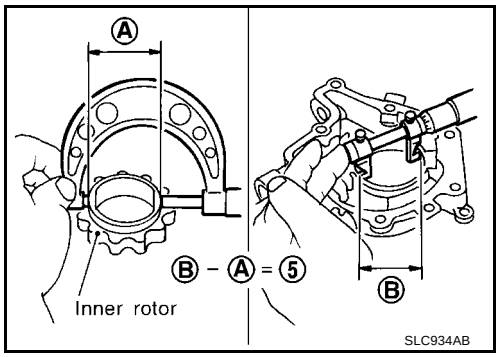


## Regulator Valve

1. Visually inspect components for wear and damage.
2. Check oil pressure regulator valve sliding surface and valve spring.
3. Coat regulator valve with engine oil. Check that it falls smoothly into the valve hole by its own weight.

**If damaged, replace regulator valve set or oil pump body.**

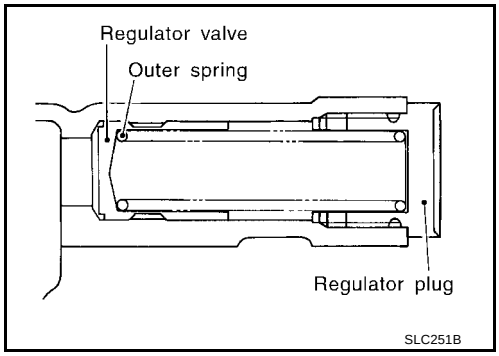


## Regulator Valve Clearance

(Clearance 6) = D (Valve hole diameter) – E (Outer diameter of valve)

**Standard : 0.040 - 0.097 mm (0.0016 - 0.0038 in)**

If it exceeds the standard, replace the oil pump body.

**CAUTION:**
**Coat regulator valve with engine oil.**
**Check that it falls smoothly into the valve hole by its own weight.**

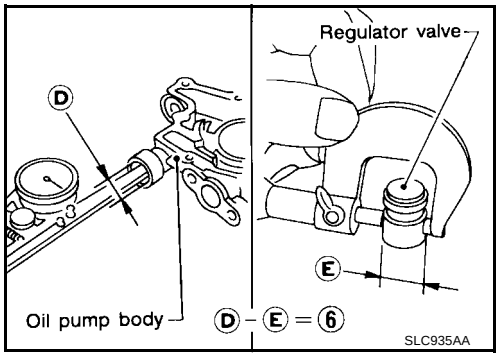

## ASSEMBLY

- Assembly is in the reverse order of disassembly.
- Assemble the inner rotor and outer rotor with the punched marks on the oil pump cover side.

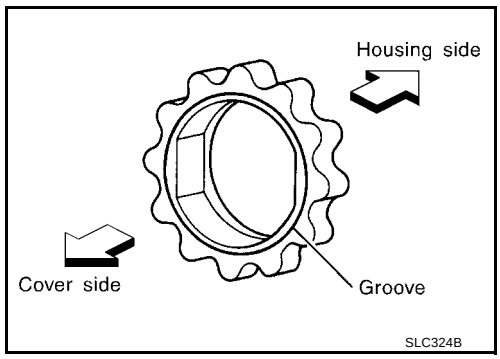

# OIL COOLER

PFP:21305

## Removal and Installation

EBS00RDV

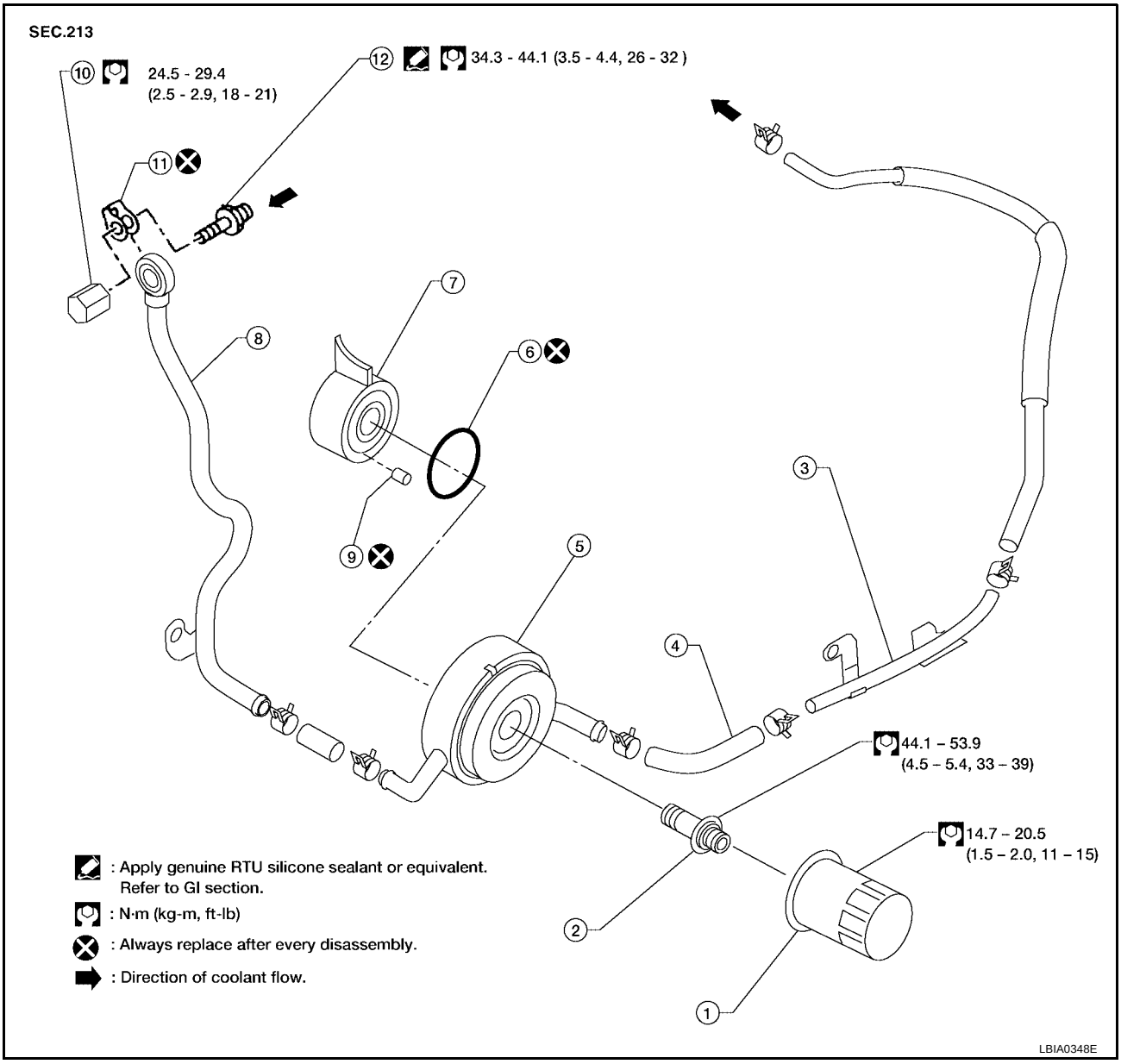


| | | | | | |
|---|---|---|---|---|---|
| 1. | Oil filter | 2. | Oil cooler bolt | 3. | Oil inlet pipe |
| 4. | Oil inlet hose | 5. | Oil cooler | 6. | O-ring |
| 7. | Oil pan | 8. | Oil outlet pipe | 9. | Relief valve |
| 10. | Drain plug | 11. | Copper gasket | 12. | Water connector |

### REMOVAL

1. Drain engine oil. Refer to MA-16, "Changing Engine Oil" .
2. Drain engine coolant. Refer to MA-14, "DRAINING ENGINE COOLANT" .
   - **Do not spill coolant on the drive belt.**
3. Remove the oil filter and the oil cooler.

### INSPECTION AFTER REMOVAL

1. Check oil cooler for cracks.
2. Check oil cooler for clogging by blowing through coolant inlet. If necessary, replace oil cooler assembly.

### Oil Pressure Relief Valve

Inspect oil pressure relief valve for movement, cracks and breaks by pushing the ball. If replacement is necessary, remove valve by prying it out with a suitable tool. Install a new valve in place by tapping it.

## INSTALLATION

- Installation is in reverse order of removal.
- **When installing the oil cooler, align the oil cooler stopper with the stopper of the oil pan.**

## INSPECTION AFTER INSTALLATION

Start engine and check there are no leaks of engine oil or coolant.

# SERVICE DATA AND SPECIFICATIONS (SDS)

PFP:00100

## Oil Pressure

EBS00RDW

| Engine speed<br>rpm | Approximate discharge pressure<br>kPa (kg/cm$^2$ , psi) |
|---|---|
| Idle speed | More than 98 (1.0, 14) |
| 2,000 | 294 (3.0, 43) |

## Regulator Valve

EBS00RDX

Unit: mm (in)

| | |
|---|---|
| Regulator valve to oil pump cover clearance | 0.040 - 0.097 (0.0016 - 0.0038) |

## Oil Pump

EBS00RDY

Unit: mm (in)

| | |
|---|---|
| Body to outer rotor radial clearance | 0.114 - 0.200 (0.0045 - 0.0079) |
| Inner rotor to outer rotor tip clearance | Below 0.18 (0.0071) |
| Body to inner rotor axial clearance | 0.030 - 0.070 (0.0012 - 0.0028) |
| Body to outer rotor axial clearance | 0.050 - 0.110 (0.0020 - 0.0043) |
| Inner rotor to brazed portion of housing clearance | 0.045 - 0.091 (0.0018 - 0.0036) |

## Oil Capacity

EBS00RDZ

Unit: ℓ (US qt, Imp qt)

| | | |
|---|---|---|
| Drain and refill | With oil filter change | Approximately 4.2 (4 1/2, 3 3/4) |
| | Without oil filter change | Approximately 4.0 (4 1/4, 3 1/2) |
| Dry engine (engine overhaul) | | Approximately 4.6 (4 7/8, 4) |