SECTION BRC
BRAKE CONTROL SYSTEM

CONTENTS

ABS

VDC/TCS/ABS

PRECAUTIONS

PFP:00001

Precautions for Supplemental Restraint System (SRS) “AIR BAG” and “SEAT BELT PRE-TENSIONER”

NFS000F0

The Supplemental Restraint System such as “AIR BAG” and “SEAT BELT PRE-TENSIONER”, used along with a front seat belt, helps to reduce the risk or severity of injury to the driver and front passenger for certain types of collision. This system includes seat belt switch inputs and dual stage front air bag modules. The SRS system uses the seat belt switches to determine the front air bag deployment, and may only deploy one front air bag, depending on the severity of a collision and whether the front occupants are belted or unbelted.
Information necessary to service the system safely is included in the SRS and SB section of this Service Manual.

WARNING:

- **To avoid rendering the SRS inoperative, which could increase the risk of personal injury or death in the event of a collision which would result in air bag inflation, all maintenance must be performed by an authorized NISSAN/INFINITI dealer.**
- **Improper maintenance, including incorrect removal and installation of the SRS, can lead to personal injury caused by unintentional activation of the system. For removal of Spiral Cable and Air Bag Module, see the SRS section.**
- **Do not use electrical test equipment on any circuit related to the SRS unless instructed to in this Service Manual. SRS wiring harnesses can be identified by yellow and/or orange harnesses or harness connectors.**

Precautions for Brake System

NFS000F1

- Recommended fluid is brake fluid “DOT 3”. Refer toMA-10, "RECOMMENDED FLUIDS AND LUBRICANTS" .
- Do not reuse drained brake fluid.
- Be careful not to splash brake fluid on painted areas.
- To clean or wash all parts of master cylinder, disc brake caliper and wheel cylinder, use clean brake fluid.
- Do not use mineral oils such as gasoline or kerosene. They will ruin rubber parts of the hydraulic system.
- Use a flare nut wrench when removing flare nuts, and use a flare nut crowfoot and torque wrench when tighten brake tube flare nuts.
- Always torque brake lines when installing.
- Before working, turn ignition switch OFF and disconnect electrical connector of ABS actuator and electric control unit (control unit) or battery negative terminal.
- Burnish the brake contact surfaces after refinishing or replacing drums or rotors, after replacing pads or linings, or if a soft pedal occurs at very low mileage. Refer to BR-32, "BRAKE BURNISHING PROCEDURE" .

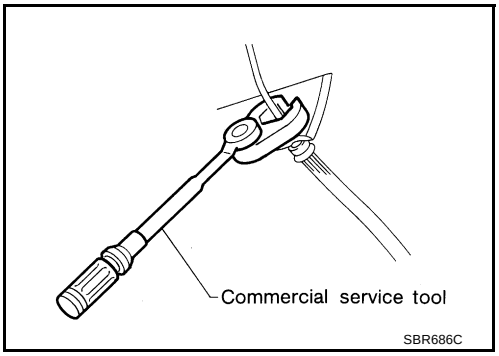

WARNING:

Clean brake pads and shoes with a waste cloth, then wipe with a dust collector.

Precautions for Brake Control

NFS000F2

- During ABS operation, brake pedal lightly vibrates and a mechanical noise may be heard. This is normal.
- Just after starting vehicle after ignition switch ON, brake pedal may vibrate or motor operating noise may be heard from engine compartment. This is a normal status of operation check.
- Stopping distance may be longer than that of vehicles without ABS when vehicle drives on rough, gravel, or snow-covered (fresh, deep snow) roads.
- When an error is indicated by ABS or another warning lamp, collect all necessary information from customer (what symptoms are present under what conditions) and check for simple causes before starting diagnostic servicing. Besides electrical system inspection, check brake booster operation, brake fluid level, and fluid leaks.
- If tire size and type are used in an improper combination, or brake pads are not Genuine NISSAN parts, stopping distance or steering stability may deteriorate.

- If there is a radio, antenna, or antenna lead-in wire (including wiring) near control module, ABS function may have a malfunction or error.
- If aftermarket parts (car stereo, CD player, etc.) have been installed, check for incidents such as harness pinches, open circuits, and improper wiring.

PREPARATION

PFP:00002

Commercial Service Tools

NFS000F3

Tool name		Description
1.Flare nut crowfoot a:10 mm (0.39 in)/12 mm (0.47 in) 2.Torque wrench	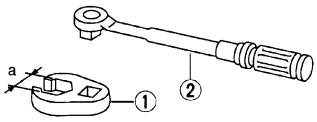 S-NT360	Installing brake tube

SYSTEM DESCRIPTION

PFP:00000

System Diagram

NFS000F4

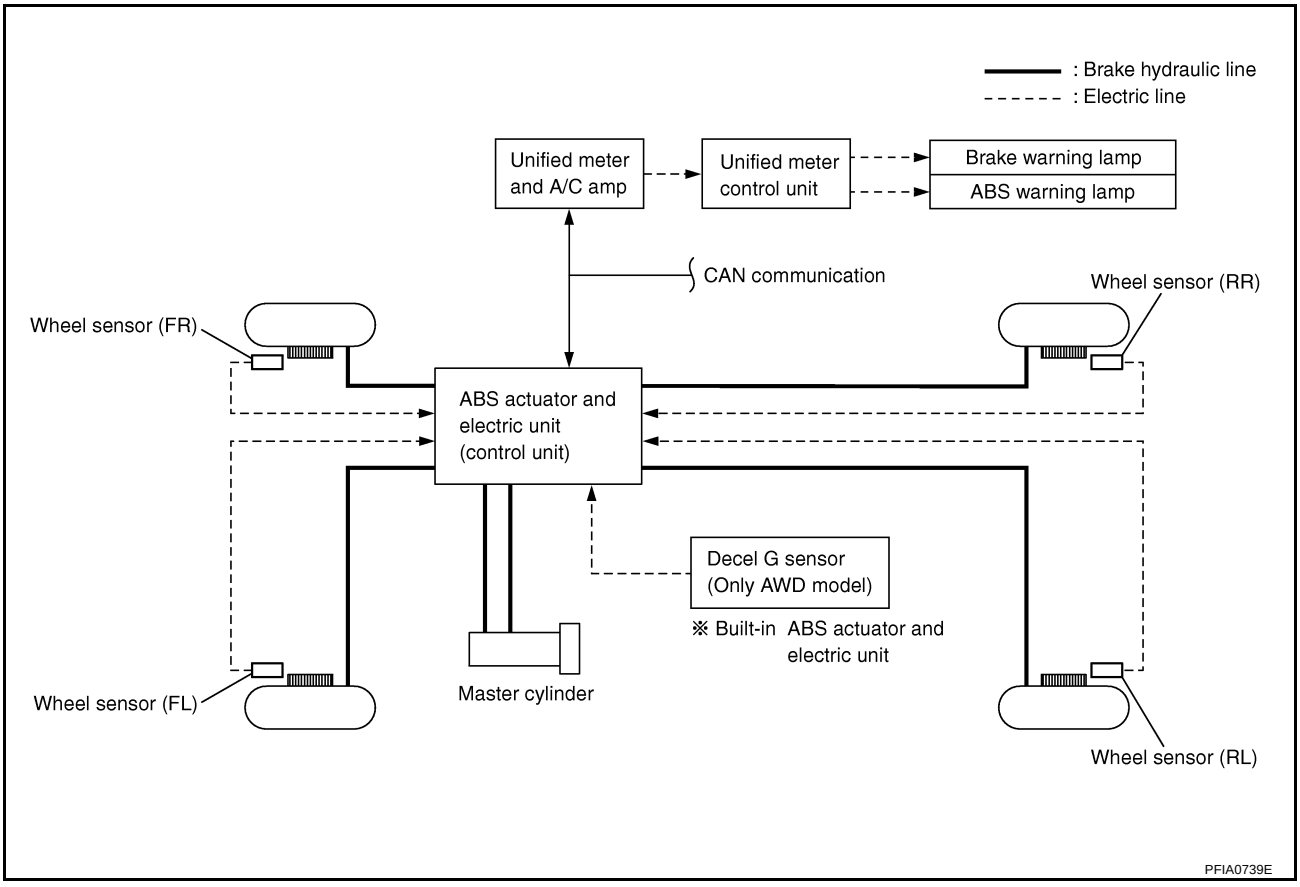

COMPONENTS FUNCTION DESCRIPTION

Components	Description
ABS actuator and electric unit (control unit)	● Receives the information of various sensor signals and then determines the vehicle driving status. Performs the calculations of target brake fluid pressure, of brake actuator drive signal output for the ABS control. ● Receives the actuator drive signal from ABS actuator and electric unit (control unit), and then performs the brake fluid adjustment of each wheel caliper.
Decel G sensor (Only AWD models)	Detects the G of the vehicle.
Wheel sensor	Detects the rotation speed of each wheel.

Function

NFS000F6

ABS

- The Anti-Lock Braking System is a function that detects wheel revolution while braking, and it improves handling stability during sudden braking by electrically preventing 4 wheel lock. Maneuverability is also improved for avoiding obstacles.
- If the electrical system malfunctions, then fail-safe function is activated, ABS becomes inoperative, and ABS warning lamp turns on.
- Electrical system diagnosis by CONSULT-II is available.
- During ABS operation, brake pedal lightly vibrates and a mechanical noise may be heard. This is normal.
- Just after starting vehicle after ignition switch ON, brake pedal may vibrate or motor operating noise may be heard from engine compartment. This is a normal status of operation check.
- Stopping distance may be longer than that of vehicles without ABS when vehicle drives on rough, gravel, or snow-covered (fresh, deep snow) roads.

EBD

- Electronic Brake Distribution is a function that detects subtle slippages between front and rear wheels during braking, and it improves handling stability by electronically controlling Brake Fluid Pressure which results in reduced rear wheel slippage.
- In case of electrical system malfunction, fail-safe function is activated, EBD and ABS becomes inoperative, and ABS warning lamp and brake warning lamp are turned on.
- Electrical system diagnosis by CONSULT-II is available.
- During EBD operation, brake pedal lightly vibrates and a mechanical noise may be heard. This is normal.
- Just after starting vehicle after ignition switch ON, brake pedal may vibrate or motor operating noise may be heard from engine compartment. This is a normal status of operation check.
- Stopping distance may be longer than that of vehicles without EBD when vehicle drives on rough, gravel, or snow-covered (fresh, deep snow) roads.

Hydraulic Circuit Diagram

NFS000F9

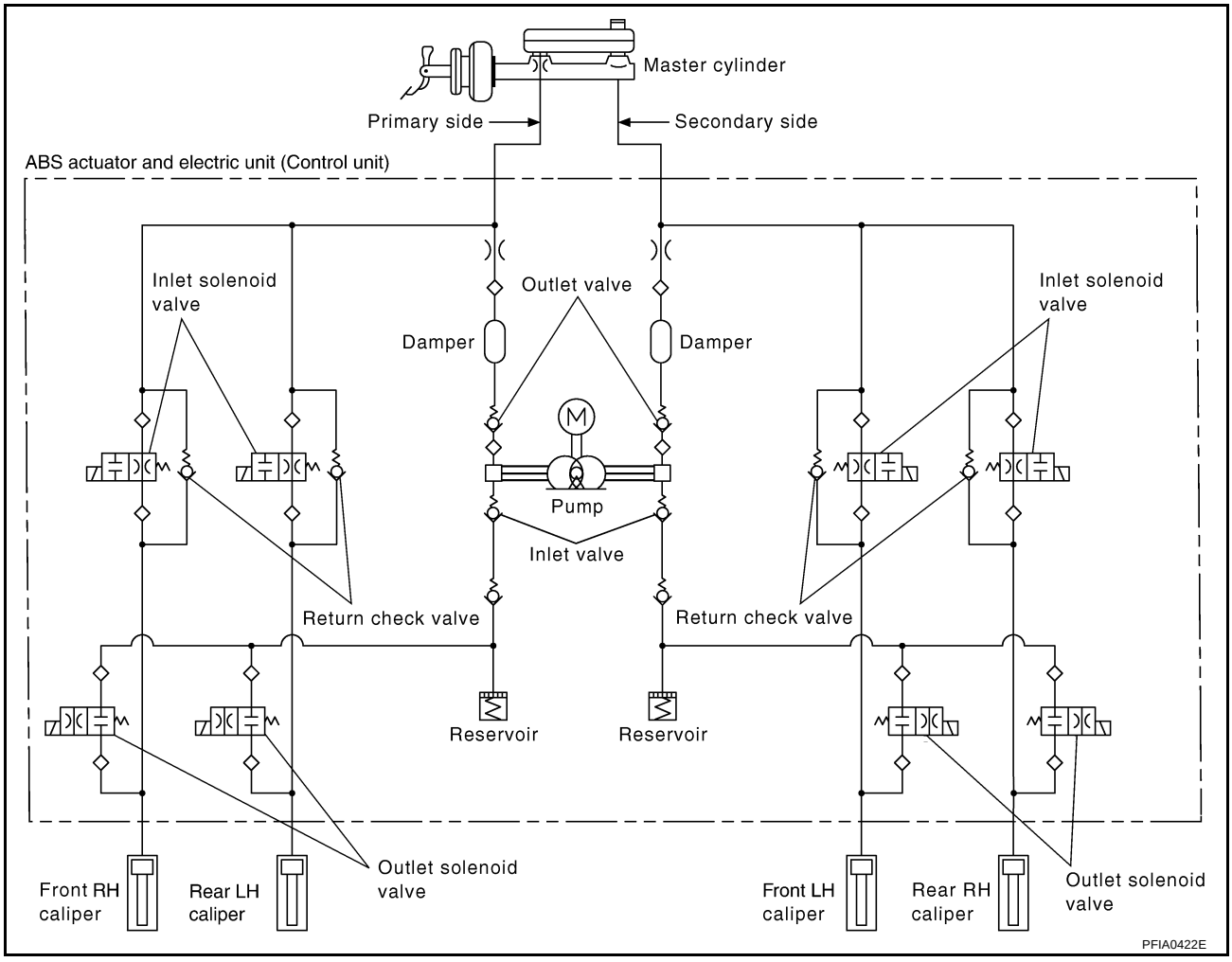

HYDRAULIC COMPONENTS FUNCTION DESCRIPTION

Components	Description
Solenoid valve (ABS control valve)	Increases, maintains and decreases the fluid pressure of each caliper according to the signal from ABS actuator and electric unit (control unit).
Reservoir	When decreasing the caliper pressure, temporarily saves the brake fluid drained form the caliper in order to perform the work efficiently.
Pump	Refills the brake fluid saved in the reservoir via the damper to the caliper.
Motor	Operates the pump according to the signal from ABS actuator and electric unit (control unit).
Inlet valve	Leaves the brake fluid drained from the reservoir to the pump so as not to return it to the reservoir.
Outlet valve	Leaves the brake fluid drained from the pump so as not to return it to the pump.
Return check valve	When releasing the brake, bypasses with the orifice of solenoid valve, and then refills the brake-fluid of caliper to the master cylinder.
Damper	Controls the pulsation of brake fluid drained from the pump, and then weakens the pedal vibration during ABS operation.

CAN Communication

NFS000FA

SYSTEM DESCRIPTION

CAN (Controller Area Network) is a serial communication line for real time application. It is an on-vehicle multiplex communication line with high data communication speed and excellent error detection ability. Many electronic control units are equipped onto a vehicle, and each control unit shares information and links with other control units during operation (not independent). In CAN communication, control units are connected with 2 communication lines (CAN H line, CAN L line) allowing a high rate of information transmission with less wiring. Each control unit transmits/receives data but selectively reads required data only. Refer to LAN-49, "CAN System Specification Chart" .

TROUBLE DIAGNOSIS

PFP:00004

Fail-Safe Function

NFS000LL

ABS, EBD SYSTEM

In case of electrical malfunctions with ABS, ABS warning lamp will turn on. In case of electrical malfunctions with EBD, brake warning lamp and ABS warning lamp will turn on. Simultaneously, ABS become one of following conditions of Fail-Safe function.

- For ABS malfunction, only EBD is activated and condition of vehicle is same condition of vehicles without ABS system.

  NOTE:
  ABS self-diagnosis sound may be heard. That is a normal condition because a self-diagnosis for “Ignition switch ON” and “The first starting” are being performed.
- For EBD malfunction, EBD and ABS become inoperative, and condition of vehicle is same as condition of vehicles without ABS, EBD system.

How to Perform Trouble Diagnosis for Quick and Accurate Repair

NFS000FB

INTRODUCTION

- Most important point to perform diagnosis is to understand systems (control and mechanism) in vehicle thoroughly.
- It is also important to clarify customer complaints before inspection.
  First of all, reproduce symptom, and understand it fully.
  Ask customer about his/her complaints carefully. In some cases, it will be necessary to check symptom by driving vehicle with customer.

  NOTE:
  Customers are not professionals. Do not assume “maybe customer means...” or “maybe customer mentioned this symptom”.

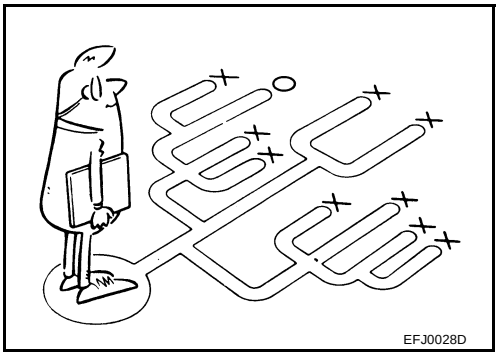
EFJ0028D

- It is essential to check symptoms right from beginning in order to repair a malfunction completely.
  For an intermittent malfunction, it is important to reproduce symptom based on interview with customer and past examples. Do not perform inspection on ad hoc basis. Most intermittent malfunctions are caused by poor contacts. In this case, it will be effective to shake suspected harness or connector by hand. When repairs are performed without any symptom check, no one can judge if malfunction has actually been eliminated.
- After diagnosis, make sure to perform “erase memory”. Refer to BRC-22, "ERASE MEMORY" .
- For an intermittent malfunction, move harness or harness connector by hand to check poor contact or false open circuit.

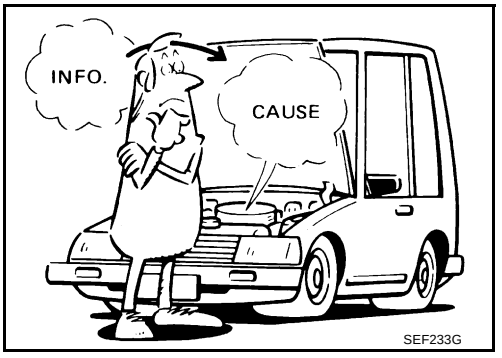

SEF233G

- Always read “GI General Information” to confirm general precautions. Refer to GI-4, "General Precautions" .

DIAGNOSIS FLOW CHART

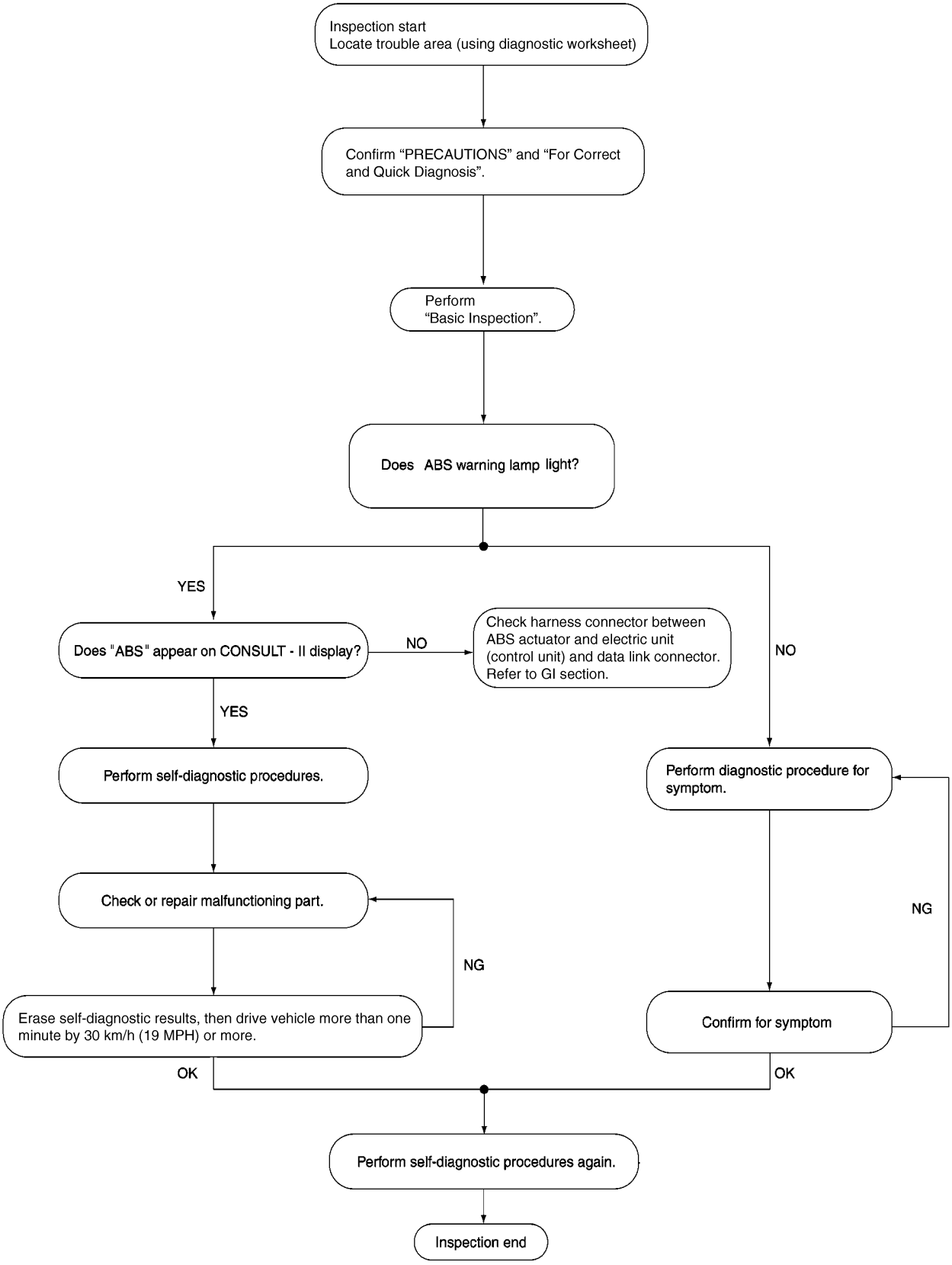

SFIA3270E

ASKING COMPLAINTS

- Complaints against malfunction vary depending on each person. It is important to clarify customer complaints.
- Ask customer about what symptoms are present and under what conditions. Use information to reproduce symptom while driving.
- It is also important to use the diagnosis sheet so as not to miss information.

KEY POINTS

WHAT ..... Vehicle model
WHEN ..... Date, Frequencies
WHERE ..... Road conditions
HOW ..... Operating conditions, Weather conditions, Symptoms

SBR339B

EXAMPLE OF DIAGNOSIS SHEET

Customer name MR/MS	Model & Year		VIN
Engine #	Trans.		Mileage
Incident Date	Manuf. Date		In Service Date
Symptoms	☐ Noise and vibration (from engine compartment) ☐ Noise and vibration (from axle)	☐ Warning / Indicator activate	☐ Firm pedal operation Large stroke pedal operation
	☐ ABS does not work (Wheels lock when braking)	☐ Lack of sense of acceleration	
Engine conditions	☐ When starting ☐ After starting		
Road conditions	☐ Low friction road (☐Snow ☐Gravel ☐Other) ☐ Bumps / potholes		
Driving conditions	☐ Full-acceleration ☐ High speed cornering ☐ Vehicle speed: Greater than 10 km/h (6 MPH) ☐ Vehicle speed: 10 km/h (6 MPH) or less ☐ Vehicle is stopped		
Applying brake conditions	☐ Suddenly ☐ Gradually		
Other conditions	☐ Operation of electrical equipment ☐ Shift change ☐ Other descriptions		

SFIA3264E

Component Installation Location

NFS000FC

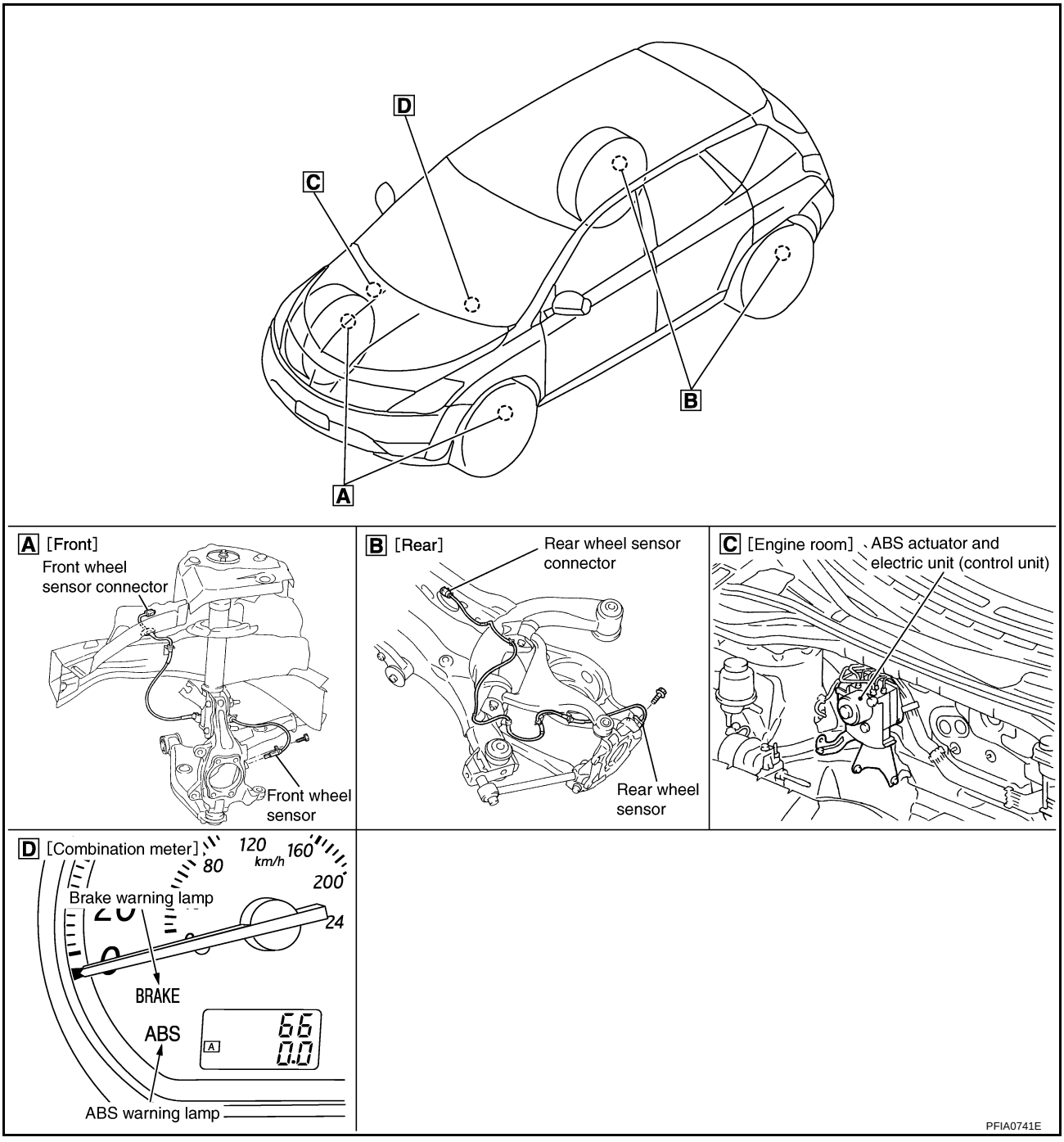

Schematic

NFS000FD

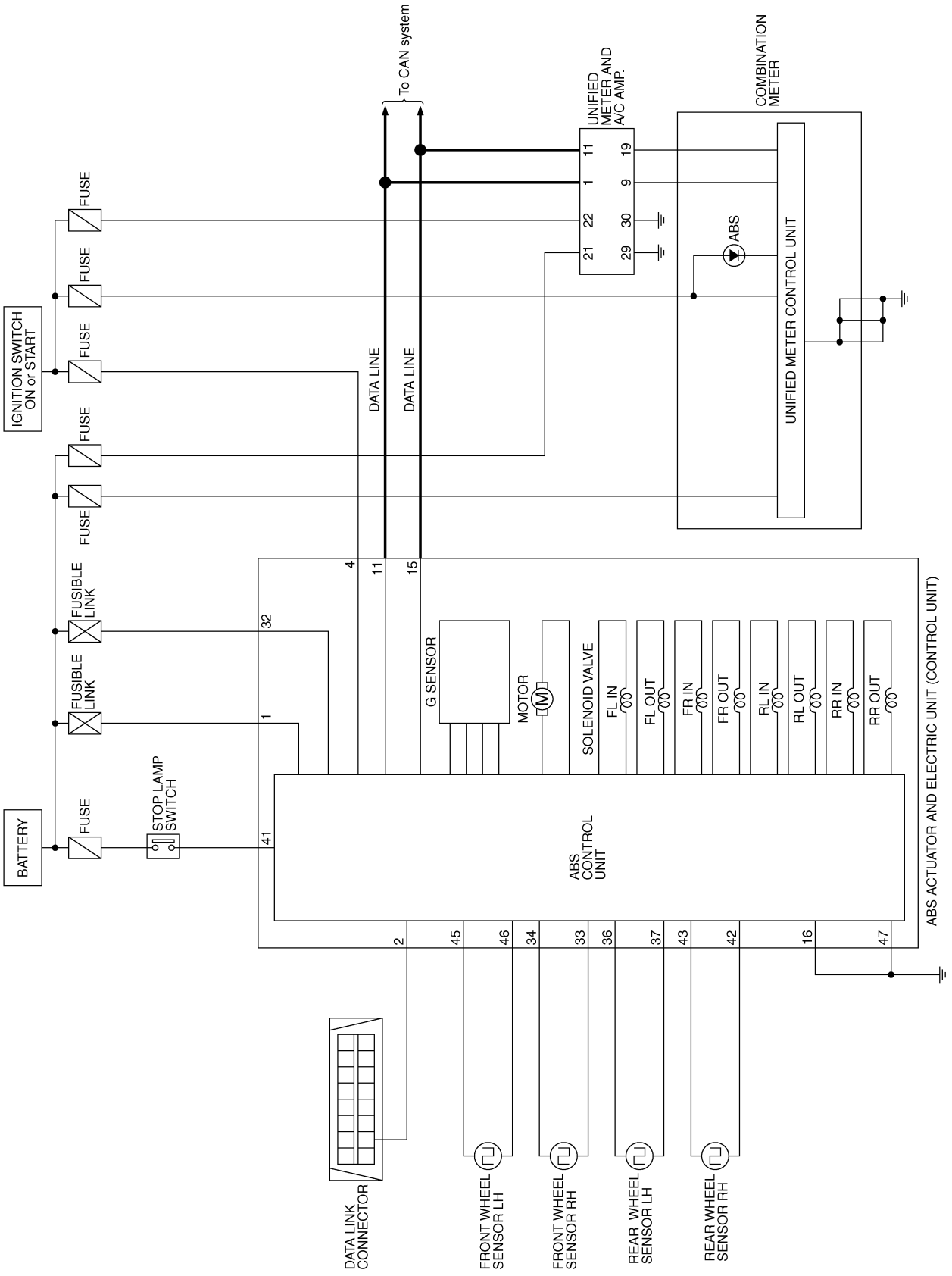

TFWB0121E

Wiring Diagram — ABS —

NFS000FE

BRC-ABS-01

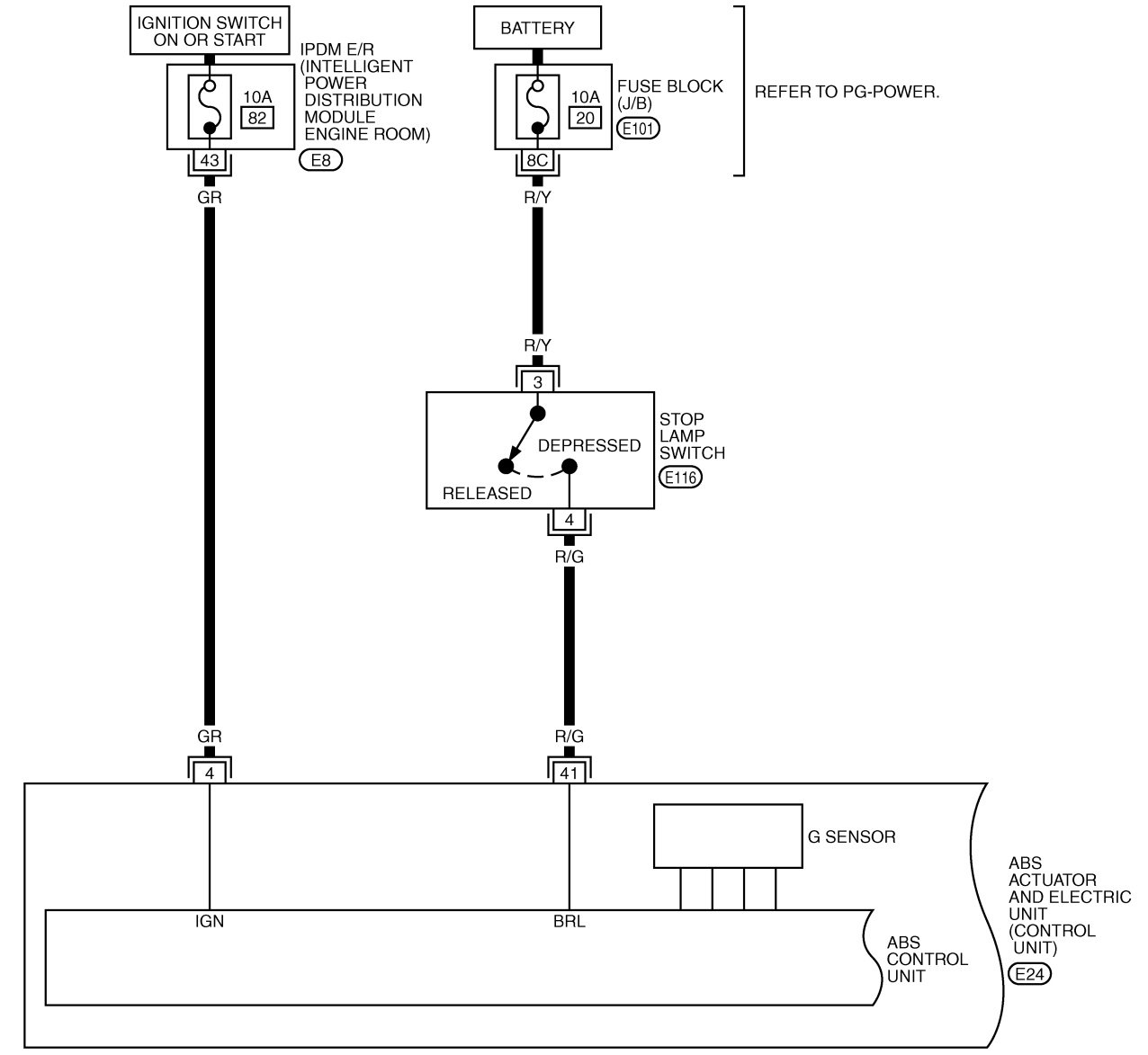

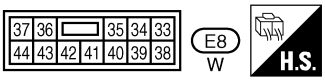

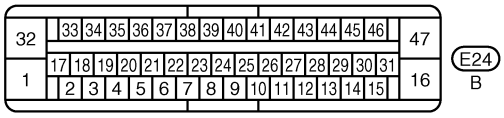

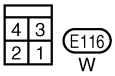

REFER TO THE FOLLOWING.
E101 -FUSE BLOCK-JUNCTION BOX (J/B)

TFWB0117E

BRC-ABS-02

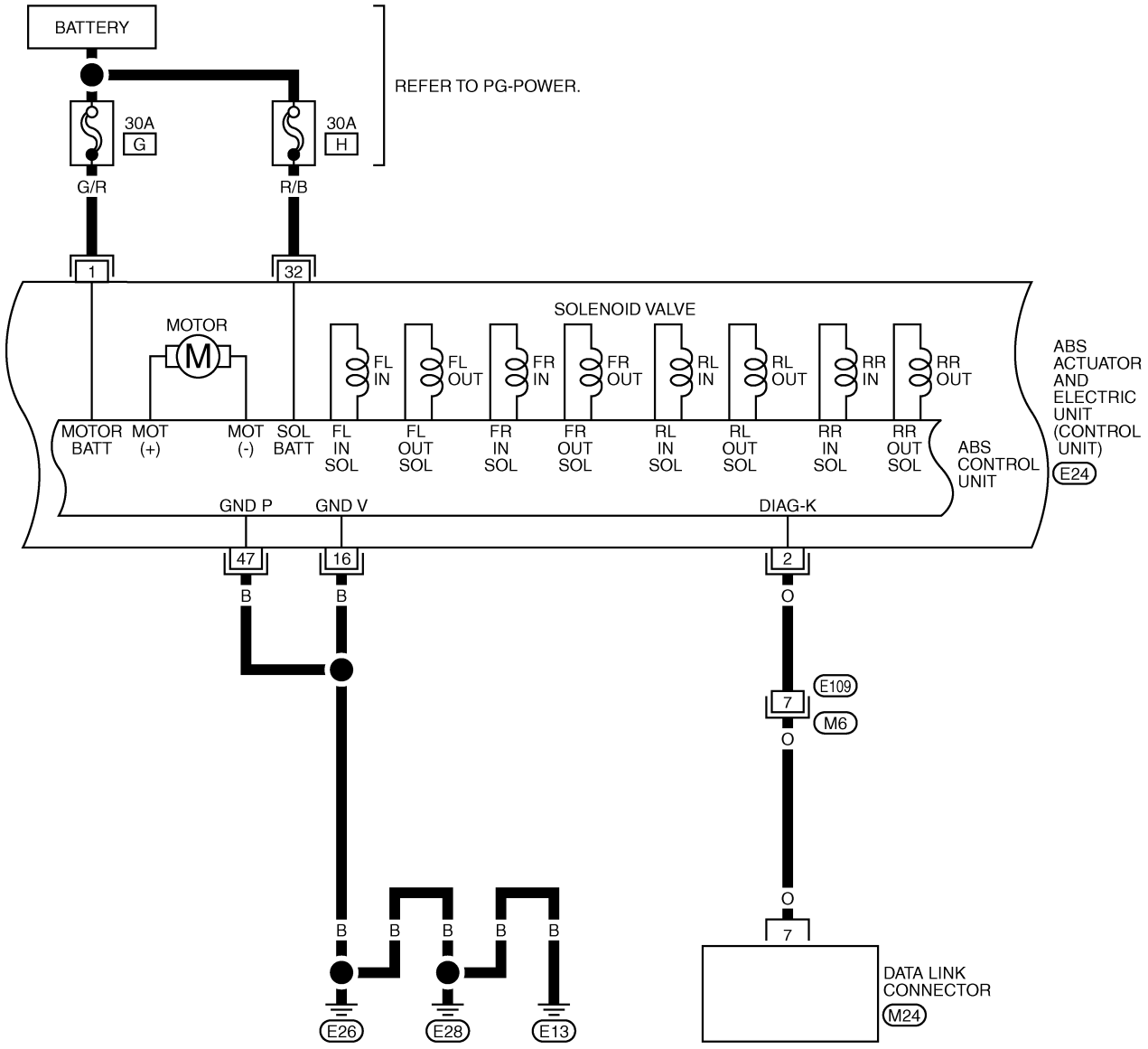

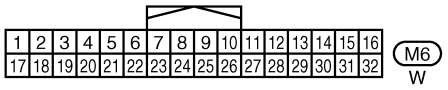

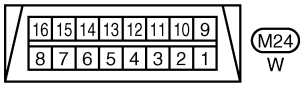

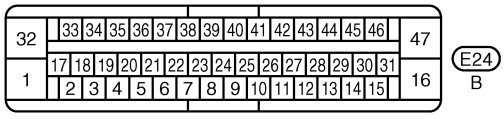

TFWB0035E

BRC-ABS-03

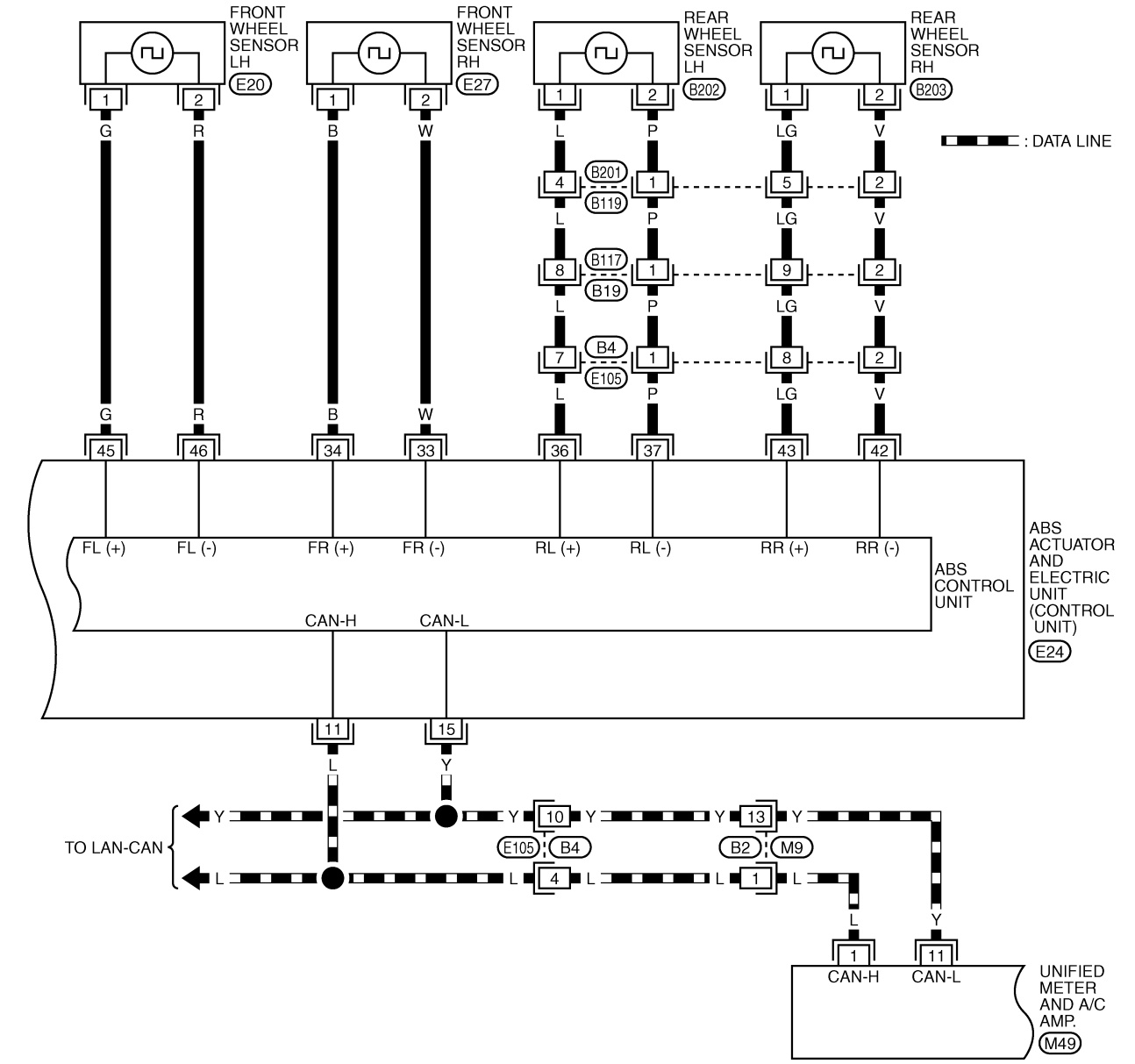

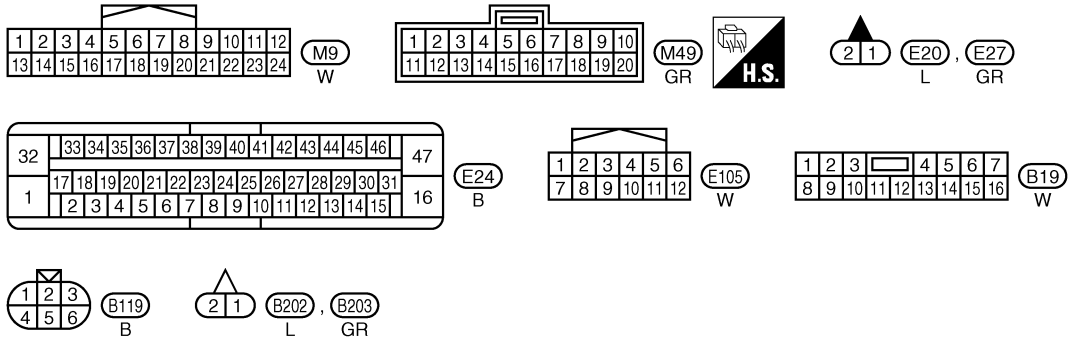

TFWB0036E

BRC-ABS-04

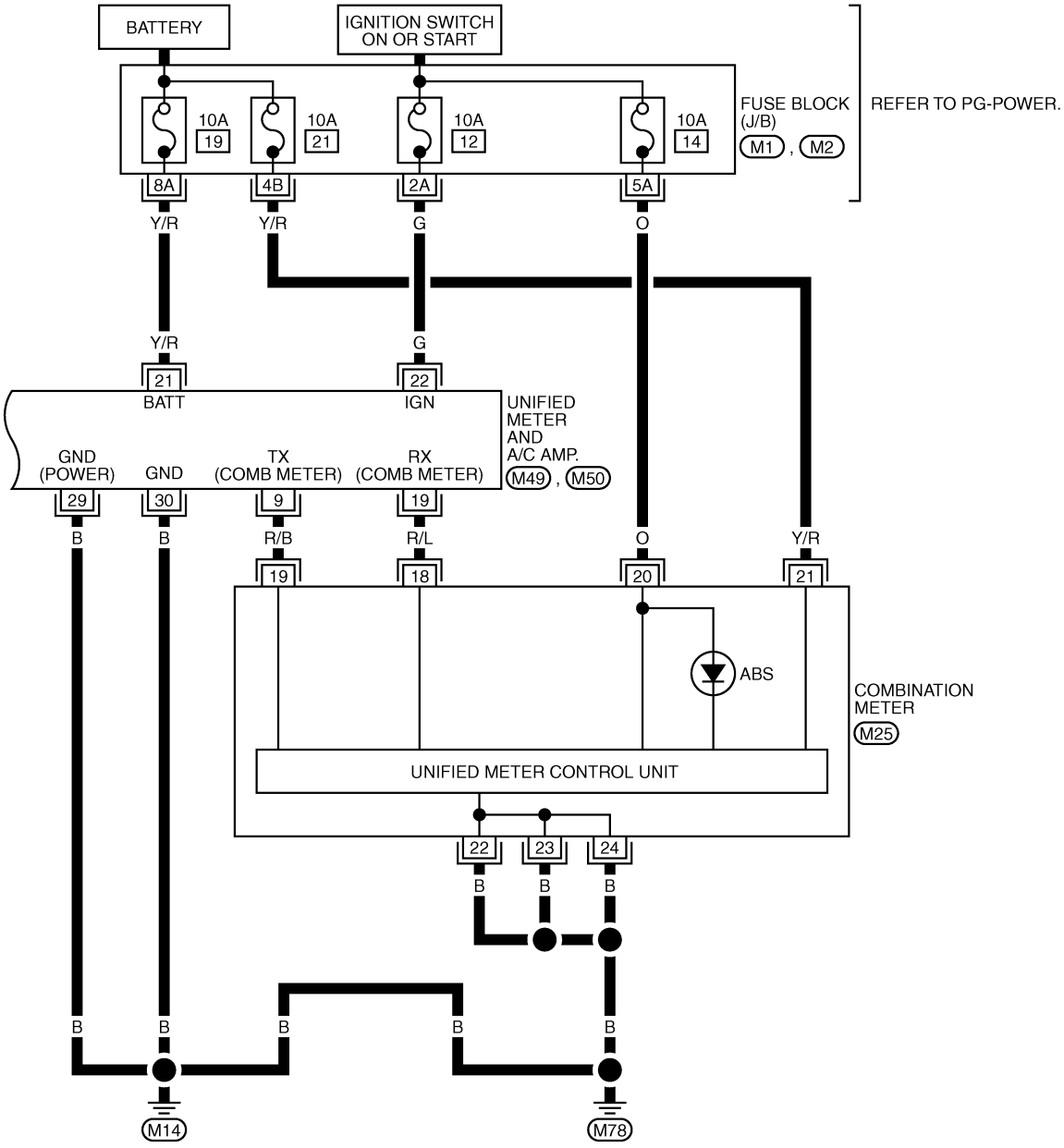

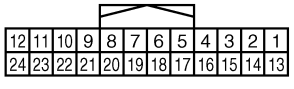

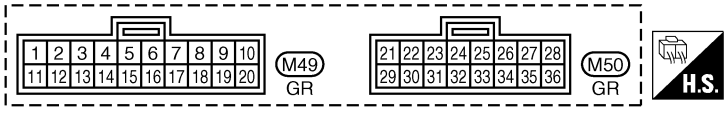

REFER TO THE FOLLOWING.
M1 , M2 -FUSE BLOCK-JUNCTION BOX (J/B)

TFWA0064E

Control Unit Input/Output Signal Standard

NFS000FF

REFERENCE VALUE FROM CONSULT-II

CAUTION:

The display shows control unit calculation data, so a normal value might be displayed even in the event the output circuit (harness) is open or short - circuited.

Monitor item	Display content	Data monitor	
		Condition	Reference value in normal operation
FR RH SENSOR FR LH SENSOR RR RH SENSOR RR LH SENSOR	Wheel speed	Vehicle stopped	0 [km/h (MPH)]
		Vehicle running (Note 1)	Almost in accordance with speedometer display (within ±10 %)
BATTERY VOLT	Battery voltage supplied to ABS actuator and electric unit (control unit)	Ignition switch ON	10 - 16 V
STOP LAMP SW	Brake pedal operation	Brake pedal depressed	ON
		Brake pedal not depressed	OFF
ABS WARN LAMP	ABS warning lamp ON condition (Note 2)	ABS warning lamp ON	ON
		ABS warning lamp OFF	OFF
MOTOR RELAY	Operation status of motor and motor relay	Ignition switch ON or engine running (ABS not operated)	OFF
		Ignition switch ON or engine running (ABS operated)	ON
ACTUATOR RLY	Actuator relay operation status	Vehicle stopped (Ignition switch ON)	OFF
		Vehicle stopped (Engine running)	ON
FR LH IN SOL FR LH OUT SOL FR RH IN SOL FR RH OUT SOL RR RH IN SOL RR RH OUT SOL RR LH IN SOL RR LH OUT SOL	Solenoid valve operation	Actuator (solenoid) is active (“ACTIVE TEST” with CONSULT-II) or actuator relay is inactive (in fail-safe mode).	ON
		When actuator (solenoid) is not active and actuator relay is active (ignition switch ON).	OFF
ABS FAIL SIG EBD FAIL SIG	Fail signal status	ABS fail EBD fail	ON
		EBD normal ABS normal	OFF
DECEL G-SEN	Longitudinal acceleration detected by decel G-sensor	Vehicle stopped	Approx. 0 G
		Vehicle running	-1.7 - +1.7 G
EBD WARN LAMP	Brake warning lamp on condition (Note 3)	Brake warning lamp ON	ON
		Brake warning lamp OFF	OFF
EBD SIGNAL	EBD operation	EBD active	ON
		EBD not active	OFF
ABS SIGNAL	ABS operation	ABS active	ON
		ABS not active	OFF

Note 1: Confirm tire pressure is normal.
Note 2: ON/OFF timing of ABS warning lamp
ON: For approximately 2 seconds after ignition switch is turned ON, or when a malfunction is detected.
OFF: Approximately 2 seconds after ignition switch is turned ON (when system is in normal operation).
Note3: Serves as EBD warning lamp.

CONSULT- II Functions (ABS)

NFS000FG

CONSULT-II MAIN FUNCTION

CONSULT-II can display each diagnostic item using the diagnostic test modes shown following.

Diagnostic test mode	Function	Reference
SELF-DIAG RESULTS	Self-diagnostic results can be read and erased quickly.	BRC-20
DATA MONITOR	Input/Output data in the ABS actuator and electric unit (control unit) can be read.	BRC-22
CAN DIAG SUPPORT MNTR	The results of transmit/receive diagnosis of communication can be read.	LAN-44
ACTIVE TEST	Diagnostic Test Mode in which CONSULT-II drives some actuators apart from the ABS actuator and electric unit (control unit) and also shifts some parameters in a specified range.	BRC-24
FUNCTION TEST	This mode is used to inform customers when their vehicle condition requires periodic maintenance.	—
ECU PART NUMBER	ABS actuator and electric unit (control unit) part number can be read.	BRC-25

CONSULT-II SETTING PROCEDURE

Refer to GI-37, "CONSULT-II Start Procedure" .

Self-Diagnosis

NFS000T0

DESCRIPTION

If an error is detected in system, ABS warning lamp and brake warning lamp on combination meter turns on. In this case, perform self-diagnosis as follows.

OPERATION PROCEDURE

1. Perform “CONSULT-II Start Procedure”. Refer to GI-37, "CONSULT-II Start Procedure" .
2. Start engine and drive at approximately 30 km/h (19 MPH) or more for approximately 1 minute.
3. Stop vehicle. With engine at idle, touch “SELF-DIAG RESULTS”. Display shows malfunction experienced since the last erasing operation.

   CAUTION:
   If START (NISSAN BASED VHCL) is touched immediately after starting engine or turning on the ignition switch, ABS might not be displayed in the SELECT SYSTEM screen. In this case, repeat the operation from step 1.
4. Self-diagnosis results are displayed. (If necessary, touch “PRINT” to print self-diagnosis result.)
   - When “NO FAILURE” is shown, check ABS warning lamp. Refer to BRC-26, "For Fast and Accurate Diagnosis" .
   - CONSULT-II self-diagnosis results are displayed without regard to occurrence timing. In some cases later ones (timing value is small) appear on next screen.
5. Go to appropriate “Inspection” chart according to “Display Item List”, and repair or replace as necessary.
6. Start engine and drive at approximately 30 km/h (19 MPH) or more for approximately 1 minute.

   CAUTION:
   - **Check again to make sure that there is no malfunction on other parts.**

DISPLAY ITEM LIST

Items (CONSULT-II screen terms)	Malfunction detecting condition	Check item
FR LH SENSOR-1 [C1104]	Circuit of front LH wheel sensor is open, or shorted or sensor power voltage is unusual.	BRC-28, "Wheel Sensor" (Note 1)
RR RH SENSOR-1 [C1101]	Circuit of rear RH wheel sensor is open, or shorted or sensor power voltage is unusual.	
FR RH SENSOR-1 [C1103]	Circuit of front RH wheel sensor is open, or shorted or sensor power voltage is unusual.	
RR LH SENSOR-1 [C1102]	Circuit of rear LH wheel sensor is open, or shorted or sensor power voltage is unusual.	
FR LH SENSOR-2 [C1108]	ABS actuator and electric unit (control unit) can not identify sensor pulses, because of large gap between wheel sensor and sensor rotor.	
RR RH SENSOR-2 [C1105]	ABS actuator and electric unit (control unit) can not identify sensor pulses, because of large gap between wheel sensor and sensor rotor.	
FR RH SENSOR-2 [C1107]	ABS actuator and electric unit (control unit) can not identify sensor pulses, because of large gap between wheel sensor and sensor rotor.	
RR LH SENSOR-2 [C1106]	ABS actuator and electric unit (control unit) can not identify sensor pulses, because of large gap between wheel sensor and sensor rotor.	
FR LH IN ABS SOL [C1120]	Circuit of front LH IN ABS solenoid is open or shorted, or control line is open or shorted to power supply or ground.	BRC-30, "Solenoid Valve Circuit"
FR LH OUT ABS SOL [C1121]	Circuit of front LH OUT ABS solenoid is open or shorted, or control line is open or shorted to power supply or ground.	
RR RH IN ABS SOL [C1126]	Circuit of rear RH IN ABS solenoid is open or shorted, or control line is open or shorted to power supply or ground.	
RR RH OUT ABS SOL [C1127]	Circuit of rear RH OUT ABS solenoid is open or shorted, or control line is open or shorted to power supply or ground.	
FR RH IN ABS SOL [C1122]	Circuit of front RH IN ABS solenoid is open or shorted, or control line is open or shorted to power supply or ground.	
FR RH OUT ABS SOL [C1123]	Circuit of front RH OUT ABS solenoid is open or shorted, or control line is open or shorted to power supply or ground.	
RR LH IN ABS SOL [C1124]	Circuit of rear LH IN ABS solenoid is open or shorted, or control line is open or shorted to power supply or ground.	
RR LH OUT ABS SOL [C1125]	Circuit of rear LH OUT ABS solenoid is open or shorted, or control line is open or shorted to power supply or ground.	
PUMP MOTOR (Note 2) [C1111]	During actuator motor operation with ON, when actuator motor turns OFF or when control line for actuator motor relay is open.	BRC-32, "Actuator Motor, Motor Relay, and Circuit"
	During actuator motor operation with OFF, when actuator motor turns ON or when control line for relay is shorted to ground.	
ABS SENSOR [ABNORMAL SIGNAL] [C1115]	Wheel sensor input is malfunction.	BRC-28, "Wheel Sensor" (Note 1)
BATTERY VOLTAGE [ABNORMAL] [C1109]	ABS actuator and electric unit (control unit) power voltage is too low.	BRC-33, "ABS Actuator and Electric Unit (Control Unit) Power Supply and Ground Circuit"
CONTROLLER FAILURE [C1110]	Internal malfunction of ABS actuator and electric unit (control unit)	BRC-30, "ABS Actuator and Electric Unit (Control Unit)"
G - SENSOR [C1113] (Only AWD models)	Decel G sensor is malfunctioning, or signal line of decel G- sensor is open or shorted.	BRC-34, "G Sensor System"

Items (CONSULT-II screen terms)	Malfunction detecting condition	Check item
CAN COMM CIRCUIT [U1000]	When a ABS actuator and electric unit (control unit) is not transmitting or receiving CAN communication signal for 2 seconds or more.	BRC-31, "CAN Communication Circuit" (Note 2)
ACTUATOR RLY [C1140]	● Actuator solenoid valve relay is ON, even if control unit sends off signal. ● Actuator solenoid valve relay is OFF, even if control unit sends on signal.	–

Note 1: After completing repairs of shorted sensor circuit, when ignition switch is turned ON, ABS warning lamp turns on. Make sure that ABS warning lamp turns off while driving vehicle at approximately 30 km/h (19 MPH) or more for approximately 1 minute according to self-diagnosis procedure. In addition, if wheel sensor 2 is displayed for wheels, check wheel sensor circuit and also check control unit power voltage.
Note 2: When errors are detected in several systems, including CAN communication system [U1000], troubleshoot CAN communication system.

ERASE MEMORY

1. Perform applicably inspection of malfunctioning item and then repair or replace.
2. Start engine and drive at 30 km/h (19 MPH) or more for approx. 1 minute.
3. Turn ignition switch “OFF” to erase memory.
4. Start engine and select “SELF-DIAG RESULTS” mode for “ABS” with CONSULT-II.
5. Touch “ERASE” on CONSULT-II screen to erase memory.

   CAUTION:
   If memory cannot be erased, perform applicably diagnosis.
6. Drive at 30 km/h (19 MPH) or more for approx. 1 minute. Be sure ABS warning lamp. Stay OFF.

Data Monitor

NFS000T1

OPERATION PROCEDURE

1. Perform “CONSULT-II Start Procedure”. Refer to GI-37, "CONSULT-II Start Procedure" .
2. Touch “DATA MONITOR”.
3. Select from “SELECT MONITOR ITEM”, screen of data monitor mode is displayed.

   NOTE:
   When malfunction is detected, CONSULT-II performs REAL-TIME DIAGNOSIS.
   Also, any malfunction detected while in this mode will be displayed at real time.

DISPLAY ITEM LIST

×: Applicable –: Not applicable

Data monitor item (Unit)	SELECT MONITOR ITEM			Remarks
	ECU INPUT SIGNALS	MAIN SIGNALS	SELECTION FROM MENU	
FR RH SENSOR [km/h (MPH)]	×	×	×	Wheel speed calculated by front RH wheel sensor signal is displayed.
FR LH SENSOR [km/h (MPH)]	×	×	×	Wheel speed calculated by front LH wheel sensor signal is displayed.
RR RH SENSOR [km/h (MPH)]	×	×	×	Wheel speed calculated by rear RH wheel sensor signal is displayed.
RR LH SENSOR [km/h (MPH)]	×	×	×	Wheel speed calculated by real LH sensor signal is displayed.
BATTERY VOLT (V)	×	×	×	Voltage supplied to ABS actuator and electric unit (control unit) is displayed.
STOP LAMP SW (ON/OFF)	×	×	×	Stop lamp switch (ON/OFF) status is displayed.
ABS WARN LAMP (ON/OFF)	–	×	×	ABS warning lamp (ON/OFF) status is displayed.
FR LH IN SOL (ON/OFF)	–	×	×	Front LH IN ABS solenoid (ON/OFF) status is displayed.

Data monitor item (Unit)	SELECT MONITOR ITEM			Remarks
	ECU INPUT SIGNALS	MAIN SIGNALS	SELECTION FROM MENU	
FR LH OUT SOL (ON/OFF)	–	×	×	Front LH OUT ABS solenoid (ON/OFF) status is displayed.
RR RH IN SOL (ON/OFF)	–	×	×	Rear RH IN ABS solenoid (ON/OFF) status is displayed.
RR RH OUT SOL (ON/OFF)	–	×	×	Rear RH OUT ABS solenoid (ON/OFF) status is displayed.
FR RH IN SOL (ON/OFF)	–	×	×	Front RH IN ABS solenoid (ON/OFF) status is displayed.
FR RH OUT SOL (ON/OFF)	–	×	×	Front RH OUT ABS solenoid (ON/OFF) status is displayed.
RR LH IN SOL (ON/OFF)	–	×	×	Rear LH IN ABS solenoid (ON/OFF) status is displayed.
RR LH OUT SOL (ON/OFF)	–	×	×	Rear LH OUT ABS solenoid (ON/OFF) status is displayed.
MOTOR RELAY (ON/OFF)	–	×	×	ABS motor relay signal (ON/OFF) status is displayed.
ACTUATOR RLY (ON/OFF)	–	×	×	ABS actuator relay signal (ON/OFF) status is displayed.
ABS FAIL SIG (ON/OFF)	–	–	×	ABS fail signal (ON/OFF) status is displayed.
EBD FAIL SIG (ON/OFF)	–	–	×	EBD fail signal (ON/OFF) status is displayed.
EBD SIGNAL (ON/OFF)	–	–	×	EBD operation (ON/OFF) status is displayed.
ABS SIGNAL (ON/OFF)	–	–	×	ABS operation (ON/OFF) status is displayed.
DECEL G SEN (G) (Only AWD models)	×	×	×	Decel acceleration detected by decel G-sensor is displayed.
EBD WARN LAMP (ON/OFF)	–	–	×	Brake warning lamp (ON/OFF) status is displayed. (Note)

NOTE:
Serves as EBD warning lamp.

Active Test

NFS000T2

OPERATION PROCEDURE

CAUTION:

- **Do not perform active test while driving vehicle.**
- **Make sure to completely bleed air from brake system.**
- **Active test can not be performed when ABS warning lamp is on.**
- **ABS warning lamp and brake warming lamp turn on during active test.**

1. Perform “CONSULT-II Start Procedure”. Refer to GI-37, "CONSULT-II Start Procedure" .
2. Touch “ACTIVE TEST”.
3. Test item selection screen is displayed.
4. Touch necessary test item.
5. With “SELECT TEST SIGNALS” display shown in reverse, touch “START”.
6. “ACTIVE TEST” screen will be displayed, so conduct following test.

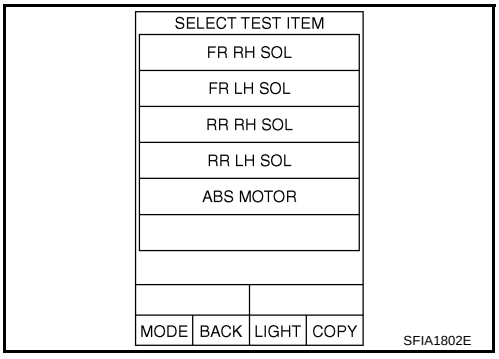

NOTE:

- When active test is performed while depressing pedal, pedal depression amount will change, but this is normal.
- Approximately 10 seconds after operation is begun, “TEST STOP” will be displayed.
- To perform retest after “TEST STOP” is displayed, touch “BACK” and conduct the test from Step 6.

TEST ITEM

Solenoid Valve

CAUTION:

The example shown is for the front right wheel. The procedure for the other wheels is the same as given below.

1. For ABS solenoid valve, touch “UP”, “KEEP”, and “DOWN”. Then use screen monitor to check that solenoid valve operates as shown in Solenoid Valve Operation Chart. Refer to “Solenoid Valve Operation Chart”.

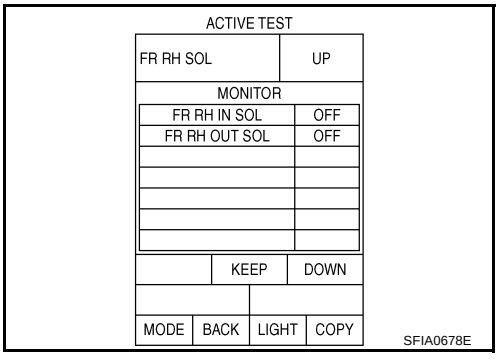

Solenoid Valve Operation Chart

Operation	ABS solenoid valve		
	UP	KEEP	DOWN
FR RH IN SOL	OFF	ON	ON
FR RH OUT SOL	OFF	OFF	ON*

*: ON for 1 to 2 seconds after the touch, and then OFF

ABS Motor

Touch “ON”, “OFF” on display screen and make sure ABS motor relay is operating as shown in table below.

Operation	ON	OFF
MOTOR RELAY	ON	OFF
ACTUATOR RLY	ON	ON

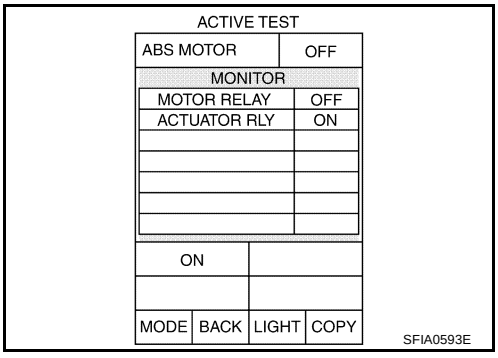

ABS Actuator and Electric Unit (Control Unit) Part Number

NFS000T3

Ignore the ABS actuator and electric unit (control unit) part number displayed in the “ECU PART NUMBER”. Refer to parts catalog to order the ABS actuator and electric unit (control unit).

Trouble Diagnosis Chart for Symptoms

NFS000KM

If ABS warning lamp, turn ON, perform self-diagnosis. Refer to BRC-20, "DESCRIPTION" .

Symptom	Check item	Reference Page
Excessive ABS function operation frequency	Brake force distribution	BRC-36
	Looseness of front and rear axle	
	Wheel sensor and rotor system	
Unexpected pedal reaction	Brake pedal stroke	BRC-36
	Make sure the braking force is sufficient when the ABS is not operating.	
The braking distance is long	Check stopping distance when the ABS is not operating.	BRC-37
ABS function does not operate	Wheel sensor	BRC-37
	The ABS does not operate when the speed is 10 km/h (6 MPH) or less.	
Pedal vibration or ABS operation sound occurs	Wheel sensor	BRC-37
	When brake pedal is lightly depressed (just place a foot on it), ABS is activated and vibration is felt. However this is normal,	
ABS warning lamp indication is not normal	CAN communication line	BRC-38
	ABS actuator and electric unit (control unit)	
	Combination meter	

For Fast and Accurate Diagnosis

NFS000FH

PRECAUTIONS FOR DIAGNOSIS

- Before performing trouble diagnosis, always read general information (GI) to confirm general precautions. Refer to GI-4, "General Precautions" .
- After completing service, always erase self-diagnosis results. Refer to BRC-20, "CONSULT- II Functions (ABS)" .
- When inspection of continuity or voltage between units is performed, check connector terminals for disconnection, looseness, bends, or collapses. If any non-standard condition is detected, repair or replace applicable part.
- Intermittent errors may be caused by a poor connection in harness, connector, or terminal. Move harnesses, harness connectors, or terminals by hand to make sure all connections are solid and undamaged.
- If a circuit tester is used for check, be careful not to forcibly extend any connector terminal.
- ABS is a system that uses electronic control to perform brake control. Therefore, phenomena like those shown in the following table may occur, but this is because system is working normally.
- To use CONSULT-II to perform self-diagnosis of ABS actuator and electric unit (control unit), active tests, or work support, first stop work, then connect CONSULT-II and select “ABS”.
- When CONSULT-II is used, ABS warning lamp may be ON/OFF.

Symptom	Symptom description	Result
Motor operation noise	This is the noise of motor operating inside ABS actuator and electric unit (control unit). Slight noise may occur during ABS operation.	Normal
	Just after the engine starts, the motor operating noise may be heard. This is a normal status of the system operation check.	
System operation check noise	When the engine is started, you may barely be able to hear a slight thudding sound from the engine room, but this sound is made by the system operation check and is normal.	Normal
ABS operation (Longer stopping distance)	Stopping distance may be longer for vehicles with ABS when the vehicle drives on rough or snow-covered roads. Use lower speeds when driving on these kinds of roads.	Normal

Basic Inspection

NFS000FI

BRAKE FLUID LEVEL, LEAKS, AND BRAKE PAD

1. Check fluid level in the brake reservoir tank. If fluid level is low, refill brake fluid.
2. Check brake piping and around ABS actuator and electric unit (control unit) for leaks. If leakage or seepage is found, check the following items.
   - If ABS actuator and electric unit (control unit) connection is loose, tighten piping to the specified torque and re-conduct the leak inspection to make sure there are no leakage.
   - If there is damage to the connection flare nut or ABS actuator and electric unit (control unit) screw, replace the damaged part and re-conduct the leak inspection to make sure there are no leakage.
   - If there is leakage or seepage at any location other than ABS actuator and electric unit (control unit) connection, wipe away leakage or seepage with clean cloth. Then inspect again and confirm than there is on leakage.
   - If there is leakage from ABS actuator and electric unit (control unit), wipe away leakage or seepage with clean cloth. Then inspect again. If there is leakage or seepage, replace ABS actuator and electric unit (control unit).

     CAUTION:
     ABS actuator and electric unit (control unit) body can not be disassembled.
3. Check the brake disc rotor and pads. Refer to BR-28, "Removal and Installation of Brake Pad" in “Front Disc Brake” and BR-34, "Removal and Installation of Brake Pad" in “Rear Disc Brake”.

POWER SYSTEM TERMINAL LOOSENESS AND BATTERY

Make sure battery positive cable, negative cable and ground connection are not loose. If looseness is detected, tighten the piping to the specified torquer. In addition, check the battery voltage to make sure it has not dropped and alternator is normal.

ABS WARNING LAMP AND BRAKE WARNING LAMP

×: ON –: OFF

Condition	ABS warning lamp	Brake warning lamp [Note 1]	Remarks
Ignition switch OFF.	—	—	—
Approx. 2 seconds after ignition switch is turned ON.	×	× [Note 2]	—
Approx. 2 seconds later after ignition switch ON.	—	× [Note 2]	Go out 2 seconds after ignition switch is turned ON.
ABS error.	×	—	There is an ABS actuator and electric unit (control unit) error. (Power, ground or system malfunction)
EBD error.	×	×	—

Note 1:Brake warning lamp will turn on in case of operating parking brake (switch turned on) or of actuating brake fluid level switch (brake fluid is insufficient).
Note 2: After starting engine, turn OFF.

Check the following items when unsuitable for an above condition.

- ABS warning lamp: BRC-31, "CAN Communication Circuit" .
- Brake warning lamp: BRC-31, "CAN Communication Circuit" ,

If malfunction is not found, refer to DI-4, "COMBINATION METERS" .

TROUBLE DIAGNOSIS FOR SYSTEM

PFP:00000

Wheel Sensor

NFS000FJ

After using CONSULT-II SELF-DIAG RESULTS to determine position of malfunctioning wheel sensor, check all areas to determine the component to be replaced.

CAUTION:

- **Do not measure resistance value and also voltage between sensor terminal with tester etc., because sensor is an active sensor.**
- **Do not expand terminal of connector with a tester terminal stick, when it does inspection with tester.**

INSPECTION PROCEDURE

1. CHECK SELF-DIAGNOSTIC RESULTS

Check self-diagnostic results.

Self-diagnosis results
FR RH SENSOR-1,-2
FR LH SENSOR- 1,-2
RR RH SENSOR-1,-2
RR LH SENSOR-1,- 2
ABS SENSOR [ABNORMAL SIGNAL]

Is above displayed in the self-diagnosis display?

YES >> GO TO 2.
NO >> INSPECTION END

2. CHECK TIRE

Check air pressure, wear, and size.

Are air pressure, wear, and size within the standard values?

YES >> GO TO 3.
NO >> Adjust air pressure, or replace tire.

3. CHECK SENSOR AND SENSOR ROTOR

- Check the condition of the sensor mount (for looseness, etc.).
- Check the surface of front sensor rotor for damage.
- Check rear sensor rotor for damage.

OK or NG

OK >> GO TO 4.
NG >> Repair sensor mount or replace sensor rotor. Refer to BRC-41, "SENSOR ROTOR" .

4. CHECK CONNECTOR

1. Turn ignition switch “OFF”.
2. Disconnect ABS actuator and electric unit (control unit) connector E24 and malfunctioning wheel sensor connector E20 (FR - LH) or E27 (FR - RH) or B202 (RR - LH), B203 (RR - RH). Check terminal to see if it is deformed, disconnected, loose, etc., and repair or replace it if any malfunction condition is found.
3. Reconnect connectors and check that interference with other parts has not cut wheel sensor cables, drive vehicle at a speed of 30 km/h (19 MPH) or above for at least 1minute, and perform self-diagnosis.

OK or NG

OK >> GO TO 5.
NG >> Connector terminal contact is loose, damaged, open or shorted.

5. CHECK WHEEL SENSOR HARNESS

1. Turn ignition switch OFF and disconnect wheel sensor connector E20 (FR - LH), E27 (FR - RH), B202 (RR - LH), B203 (RR - RH) and ABS actuator and electric unit (control unit) connector E24.
2. Check continuity between terminals. (Also check continuity when steering wheel is turned right and left and when sensor harness inside wheel well is moved.)

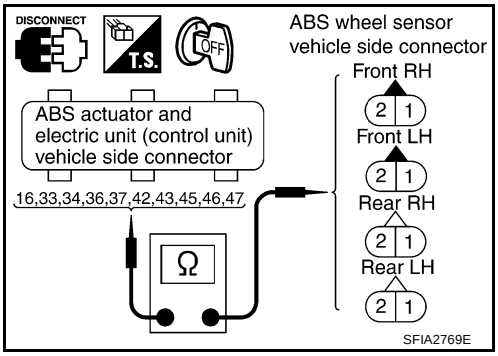

	Power supply circuit		Signal circuit		Ground circuit	
Wheel	ABS actuator and electric unit (control unit)	Wheel sensor	ABS actuator and electric unit (control unit)	Wheel sensor	ABS actuator and electric unit (control unit) (Signal)	ABS actuator and electric unit (control unit) (Ground)
Front RH	34	1	33	2	33, 34	16, 47
Front LH	45	1	46	2	45, 46	
Rear RH	43	1	42	2	43, 42	
Rear LH	36	1	37	2	36, 37	

Power supply circuit : Continuity should exist.
Signal circuit : Continuity should exist.
Ground circuit : Continuity should not exist.

OK or NG

OK >> GO TO 6.
NG >> Repair or replace harness and connector between ABS actuator and electric unit (control unit) and wheel sensor.

6. CHECK WHEEL SENSOR POWER SUPPLY CIRCUIT

1. Disconnect malfunctioning wheel sensor connector.
2. Turn ignition switch ON and check voltage between wheel sensor harness connector power supply terminal and ground.

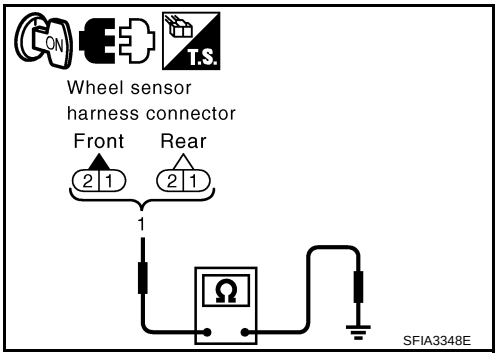

Wheel	Wheel sensor	Ground	Voltage
Front RH	1	—	8 V or more
Front LH			
Rear RH			
Rear LH			

OK or NG?

OK >> Replace wheel sensor.
NG >> Replace ABS actuator and electric unit (control unit).

ABS Actuator and Electric Unit (Control Unit)

NFS000FK

INSPECTION PROCEDURE

1. CHECK SELF-DIAGNOSIS RESULTS

Check self-diagnostic results.

Self-diagnosis results
CONTROLLER FAILURE

Is above displayed in the self-diagnosis display?

YES >> ● Replace ABS actuator and electric unit (control unit).
● Perform the self-diagnosis, and make sure that the result shows “NO DTC IS DETECTED”.

NO >> INSPECTION END

Solenoid Valve Circuit

NFS000FL

INSPECTION PROCEDURE

1. CHECK SELF-DIAGNOSIS RESULT

Check self-diagnostic results.

Self-diagnosis results
FR LH IN ABS SOL
FR LH OUT ABS SOL
RR RH IN ABS SOL
RR RH OUT ABS SOL
FR RH IN ABS SOL
FR RH OUT ABS SOL
RR LH IN ABS SOL
RR LH OUT ABS SOL

Is above displayed in the self-diagnosis display?

YES >> GO TO 2.
NO >> INSPECTION END

2. CHECK CONNECTOR

1. Turn ignition switch “OFF”.
2. Disconnect ABS actuator and electric unit (control unit) connector E24, check terminal for is deformation, disconnection, looseness, etc., and if there is any malfunction, repair or replace terminal.
3. Reconnect connectors and then perform the self-diagnosis.

OK or NG

OK >> INSPECTION END.
NG >> GO TO 3.

3. CHECK ABS ACTUATOR RELAY OR ABS MOTOR RELAY POWER SUPPLY CIRCUIT

1. Turn ignition switch “OFF”.
2. Disconnect ABS actuator and electric unit (control unit) connector E24.
3. Check voltage between ABS actuator and electric unit (control unit) harness connector E24 and ground.

1 - Ground	**: Battery voltage.**
32 - Ground	**: Battery voltage.**

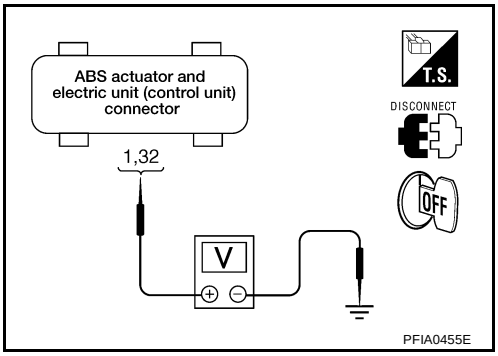

OK or NG

OK >> GO TO 4
NG >> Circuit malfunction between battery and ABS actuator and electric unit (control unit). Repair the circuit.

4. CHECK ABS ACTUATOR AND ELECTRIC UNIT (CONTROL UNIT) GROUND CIRCUIT

1. Turn ignition switch “OFF”.
2. Check continuity between ABS actuator and electric unit (control unit) harness connector E24 and ground.

16 - Ground	**: Continuity should exist.**
47 - Ground	**: Continuity should exist.**

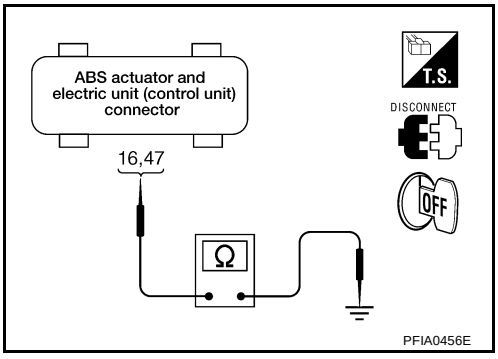

OK or NG

OK >> Perform self-diagnosis again. If the same results appear, replace ABS actuator and electric unit (control unit).
NG >> Open or short in harness. Repair or replace harness.

CAN Communication Circuit

NFS000FM

INSPECTION PROCEDURE

1. CHECK CONNECTOR

1. Turn ignition switch “OFF”.
2. Disconnect the ABS actuator and electric unit (control unit) connector, and check the terminal for deformation, disconnection, looseness, and so on. If there is a malfunction, repair or replace the terminal.
3. Reconnect connector to perform self-diagnosis.

Self-diagnostic results
CAN COMM CIRCUIT

Is “CAN COMM CIRCUIT” displayed in the self-diagnosis display?

YES >> Print out the self-diagnostic results, and refer to LAN-49, "CAN System Specification Chart" .
NO >> Connector terminal connector is loose, damaged, open, or shorted.

Actuator Motor, Motor Relay, and Circuit

NFS000FN

INSPECTION PROCEDURE

1. CHECK SELF-DIAGNOSIS RESULTS

Check self-diagnostic results.

Self-diagnosis results
PUMP MOTOR
ACTUATOR RLY

Is above displayed in self-diagnosis display?

YES >> GO TO 2.
NO >> INSPECTION END

2. CHECK CONNECTOR

1. Turn ignition switch “OFF”.
2. Disconnect ABS actuator and electric unit (control unit) connector E24. Then reconnect it securely.
3. Preform self-diagnosis again.

DO any self-diagnosis items appear?

YES >> GO TO 3
NO >> Poor connection. Repair or replace the applicable connector.

3. CHECKING ABS MOTOR AND MOTOR RELAY POWER SYSTEM

1. Turn ignition switch “OFF”.
2. Disconnect ABS actuator and electric unit (control unit) connector.
3. Check voltage between ABS actuator and electric (control unit) unit harness connector E24 and ground.

1 - Ground : Battery voltage.
32 - Ground : Battery voltage.

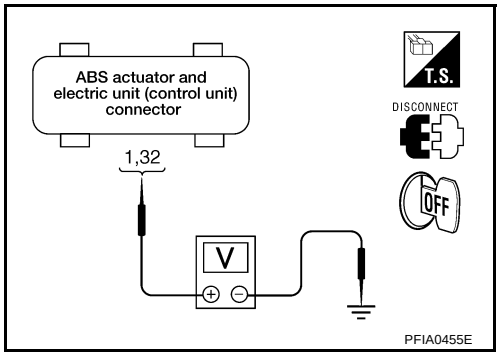

4. Check continuity between ABS actuator and electric unit (control unit) harness connector E24 and ground.

16 - Ground : Continuity should exist.
47 - Ground : Continuity should exist.

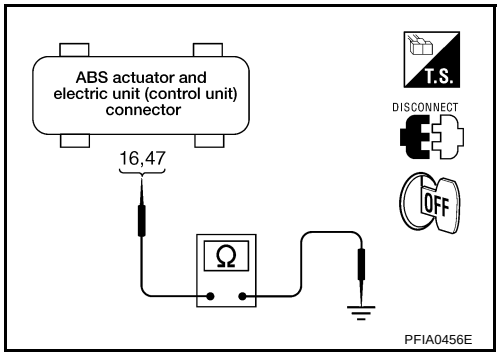

OK or NG

OK >> Perform self-diagnosis again. If the same result appears, replace ABS actuator and electric unit (control unit). Refer to BRC-42, "ACTUATOR AND ELECTRIC UNIT (ASSEMBLY)" .
NG >> Repair harness or connectors.

ABS Actuator and Electric Unit (Control Unit) Power Supply and Ground Circuit

NFS000FO

INSPECTION PROCEDURE

1. CHECK SELF-DIAGNOSIS RESULTS

Check self-diagnostic results.

Self-diagnosis results
BATTERY VOLTAGE [ABNORMAL]

Dose “BATTERY VOLTAGE” appear in self-diagnosis results display?

YES >> GO TO 2.
NO >> INSPECTION END

2. CHECK CONNECTOR

1. Turn ignition switch “OFF”.
2. Disconnect ABS actuator and electric unit (control unit) connector E24. Then reconnect it securely.
3. Preform self-diagnosis again.

Do any self-diagnosis items appear?

YES >> GO TO 3
NO >> Poor connection. Repair or replace the applicable connector.

3. CHECK ABS MOTOR AND MOTOR RELAY POWER SYSTEM

1. Turn ignition switch “OFF”.
2. Disconnect ABS actuator and electric unit (control unit) connector.
3. Check voltage between ABS actuator and electric unit (control unit) harness connector E24 and ground.

1 - Ground : Battery voltage.
32 - Ground : Battery voltage.

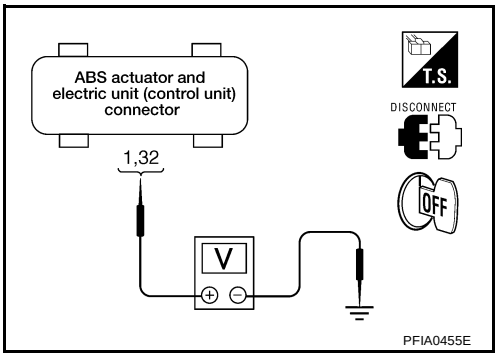

OK or NG

OK >> GO TO 4.
NG >> GO TO 5.

4. CHECK ABS ACTUATOR AND ELECTRIC UNIT (CONTROL UNIT) GROUND CIRCUITS

1. Turn ignition switch “OFF”.
2. Check continuity between ABS actuator and electric unit (control unit) harness connector E24 and ground.

16 - Ground : Continuity should exist.
47 - Ground : Continuity should exist.

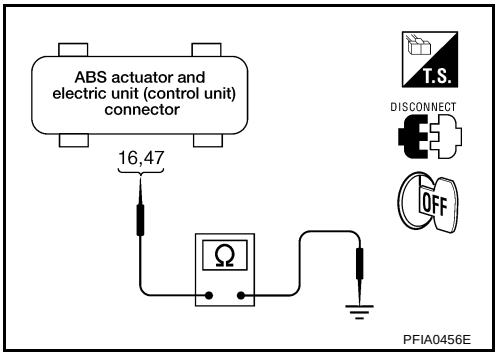

OK or NG

OK >> Perform ABS actuator and electric unit (control unit) self-diagnosis again.
NG >> Repair harness or connectors.

5. CHECK ABS ACTUATOR AND ELECTRIC UNIT (CONTROL UNIT) POWER SYSTEM

1. Check fuse.
2. Check continuity between battery positive terminal and ABS actuator and electric unit (control unit) harness connector E24.

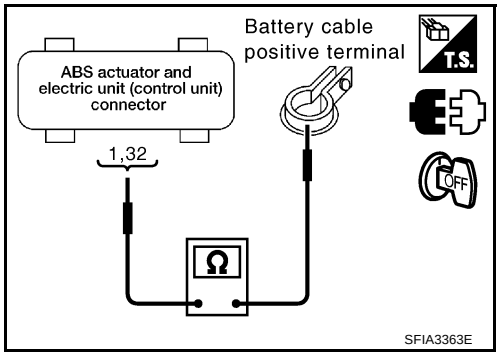

ABS actuator and electric unit (control unit)	Battery positive terminal	Continuity
1, 32	–	Yes

OK or NG

OK >> Check for non-standard condition in battery (terminal looseness, low voltage, etc.) and alternator.

NG >>
- Replace fuse.
- Open or short in harness.

G Sensor System

NFS000FP

INSPECTION PROCEDURE

1. CHECK SELF-DIAGNOSIS RESULT

Check self-diagnostic results.

Self-diagnosis results
G-SENSOR

Is above displayed in the self-diagnosis display?

YES >> GO TO 2.

NO >> INSPECTION END

2. CHECK G SENSOR

Use “Data Monitor” to check if the G sensor are normal.

Vehicle status	G sensor (Data monitor standard)
When stopped	–0.11 G to +0.11 G
Speed up	Negative value

OK or NG

OK >> INSPECTION END

NG >> Replace ABS actuator and electric unit (control unit) and then perform ABS actuator and electric unit (control unit) self-diagnosis again.

Stop Lamp Switch

NFS000LJ

INSPECTION PROCEDURE

1. CHECK CONNECTOR

1. Turn ignition switch “OFF”.
2. Disconnect the stop lamp switch connector E116 and ABS actuator and electric unit (control unit) connector E24 and check terminals for deformation, disconnection, looseness, and so on. If any malfunction is found, repair or replace terminal.
3. Reconnect connectors securely.
4. Start engine.
5. Repeat pumping brake pedal carefully several times, then perform the self-diagnosis.

Do any self-diagnosis items appear?

OK >> GO TO 2.

NG >> Poor connection. Repair or replace applicable connector.

2. CHECK STOP LAMP SWITCH CIRCUIT

1. Turn ignition switch “OFF”.
2. Disconnect stop lamp switch connector E116 and ABS actuator and electric unit (control unit) connector E24.
3. Check continuity between stop lamp switch harness connector E116 and ABS actuator and electric unit (control unit) harness connector E24.

41 - 2 : Continuity should exist.

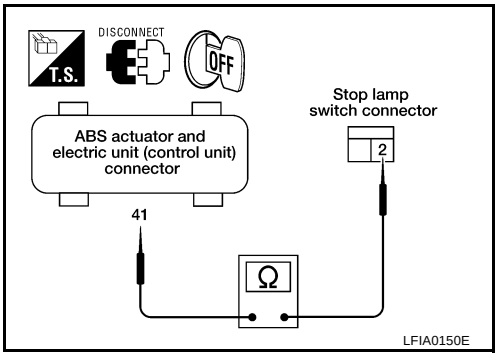

OK or NG

OK >> Connect connectors and perform an ABS actuator and electric unit (control unit) self-diagnosis.

NG >> Open or short in harness. Repair or replace harness.

TROUBLE DIAGNOSIS FOR SYMPTOMS

PFP:00007

Excessive ABS Function Operation Frequency

NFS000FQ

1. CHECK ABS WARNING LAMP DISPLAY

Make sure the ABS warning lamp turns off approximately 2 seconds after the ignition switch is turned on or when driving.

OK or NG

OK >> GO TO 2.
NG >> Perform self-diagnosis. Refer to BRC-20, "DESCRIPTION" .

2. CHECK BRAKE FORCE DISTRIBUTION

Check front and rear brake force distribution using a brake tester. Refer to BR-39, "SERVICE DATA AND SPECIFICATIONS (SDS)" .

OK or NG

OK >> GO TO 3.
NG >> Check brake system.

3. CHECK FRONT AND REAR AXLE

Make sure there is no excessive play in the front and rear axles. Refer to front axle FAX-6, "FRONT WHEEL HUB AND KNUCKLE" , rear axle RAX-5, "WHEEL HUB" .

OK or NG

OK >> GO TO 4.
NG >> Axle inspection and repair.

4. CHECK WHEEL SENSOR AND SENSOR ROTOR

Check the following.

- Wheel sensor installation for damage.
- Sensor rotor installation for damage.
- Wheel sensor connector connection.
- Wheel sensor harness inspection.

OK or NG

OK >> INSPECTION END.
NG >> Repair wheel sensor and rotor system.

Unexpected Pedal Reaction

NFS000FR

1. CHECK BRAKE PEDAL STROKE

Check brake pedal stroke. BR-7, "Inspection and Adjustment" .

Is the stroke too big?

YES >>
- Bleed air from the brake piping. Refer to BR-13, "Bleeding Brake System" .
- Check brake pedal, brake booster, and master cylinder mount for play, looseness, and brake system for fluid leaks, etc. If any malfunctions are found, make repairs. Brake pedal: BR-10, "Removal and Installation" . Brake master cylinder and Brake booster: BR-23, "Removal and Installation" .

NO >> GO TO 2.

2. CHECK FUNCTION

1. Turn ignition switch “OFF”.
2. Disconnect ABS actuator and electric unit (control unit) connector, and make sure the braking force is sufficient when the ABS is not operating. After the inspection, reconnect connector.

OK or NG

OK >> GO TO 4. “CHECK WHEEL SENSOR AND SENSOR ROTOR” in BRC-36, "Excessive ABS Function Operation Frequency"
NG >> Check brake system.

The Braking Distance is Long

NFS000FS

CAUTION:
On slippery road surfaces, the stopping distance might be longer with ABS operating than when ABS is not operating.

1. CHECK FUNCTION

1. Turn ignition switch “OFF”.
2. Disconnect VDC/TCS/ABS control unit connector to deactivate ABS. In this condition, check stopping distance. After inspection, connect connector.

OK or NG

OK >> GO TO 4. “CHECK WHEEL SENSOR AND SENSOR ROTOR” in BRC-36, "Excessive ABS Function Operation Frequency" .
NG >>
- Bleed air from brake piping. BR-13, "Bleeding Brake System" .
- Check brake system.

ABS Function Dose Not Operate

NFS000FT

CAUTION:
ABS does not operate when the speed is 10 km/h (6 MPH) or less.

1. CHECK ABS WARNING LAMP DISPLAY

Make sure the ABS warning lamp turns off approximately 2 seconds after the ignition switch is turned on or when driving.

OK or NG

OK >> OK or NG
NG >> Perform self-diagnosis. Refer to BRC-20, "DESCRIPTION" .

Pedal Vibration or ABS Operation Sound Occurs

NFS000FU

CAUTION:
Under the following conditions, when brake pedal is lightly depressed (just place a foot on it), ABS is activated and vibration is felt. However, this is normal.

- **When shifting gears**
- **When driving on slippery road**
- **During cornering at high speed**
- **When passing over bumps or grooves.**
- **When driving just after starting engine (at approximately 10 km/h (6 MPH) or higher)**

1. SYMPTOM CHECK

Check if pedal vibration or operation sound occurs when the engine is started.

OK or NG

OK >> GO TO 2.
NG >> Perform self-diagnosis. Refer to BRC-20, "DESCRIPTION" .

2. INSPECTION CHECK 1

Does vibration occur during normal parking?

CAUTION:
In addition to activation for sudden braking, ABS may activate in conditions such as those listed below.

- **Roads with low surface.**
- **Turning at high speed.**
- **Passing through gusts of wind.**

OK or NG

OK >> GO TO 3.
NG >> Normal

3. INSPECTION CHECK 2

Check for vibration when engine speed is increased while vehicle is stopped.

OK or NG

OK >> GO TO 4
NG >> ● Normal

CAUTION:
Vibration may occur when vehicle is stopped.

4. INSPECTION CHECK 3

Check for vibration when switches of electrical components are operated.

OK or NG

OK >> Check for any wireless devices, or antenna lead near control unit (including wiring).
NG >> GO TO 5.

5. CHECK ABS WARNING LAMP INDICATION

Confirm ABS warning lamp turns on.

OK or NG

OK >> Perform self-diagnosis. Refer to BRC-20, "DESCRIPTION" .
NG >> GO TO 4. “CHECK WHEEL SENSOR AND SENSOR ROTOR” in BRC-36, "Excessive ABS Function Operation Frequency" .

ABS Warning Lamp Indication is Not Normal

NFS000LM

NOTE:
For lighting condition of ABS warning lamp. refer to BRC-27, "ABS WARNING LAMP AND BRAKE WARNING LAMP" .

1. CHECK SYSTEM FOR CAN COMMUNICATION LINE

Perform self-diagnosis. Refer to BRC-20, "DESCRIPTION" .

Is the “CAN COMM CIRCUIT [U1000]” displayed?

YES >> Perform trouble diagnosis for CAN communication line. Refer to BRC-31, "CAN Communication Circuit" .
NO >> GO TO 2.

2. CHECK ABS ACTUATOR AND ELECTRIC UNIT (CONTROL UNIT)

1. Turn ignition switch “OFF”.
2. Check ABS actuator electric unit (control unit) input/output signal. Refer to BRC-19, "Control Unit Input/Output Signal Standard" .

OK or NG

OK >> GO TO 3.
NG >> Check VDC/TCS/ABS control unit pin terminals for damage or loose connection with harness connector. If any item is damaged, repair or replace damaged parts.

3. CHECK COMBINATION METER INDICATION

Check the combination meter indication and operation. Refer to DI-15, "Self-Diagnosis Mode of Combination Meter" .

OK or NG

OK >> INSPECTION END.
NG >> Combination meter is malfunctioning. Check combination meter. Refer to DI-4, "COMBINATION METERS" .

WHEEL SENSORS

PFP:47910

Removal and Installation

NFS000FV

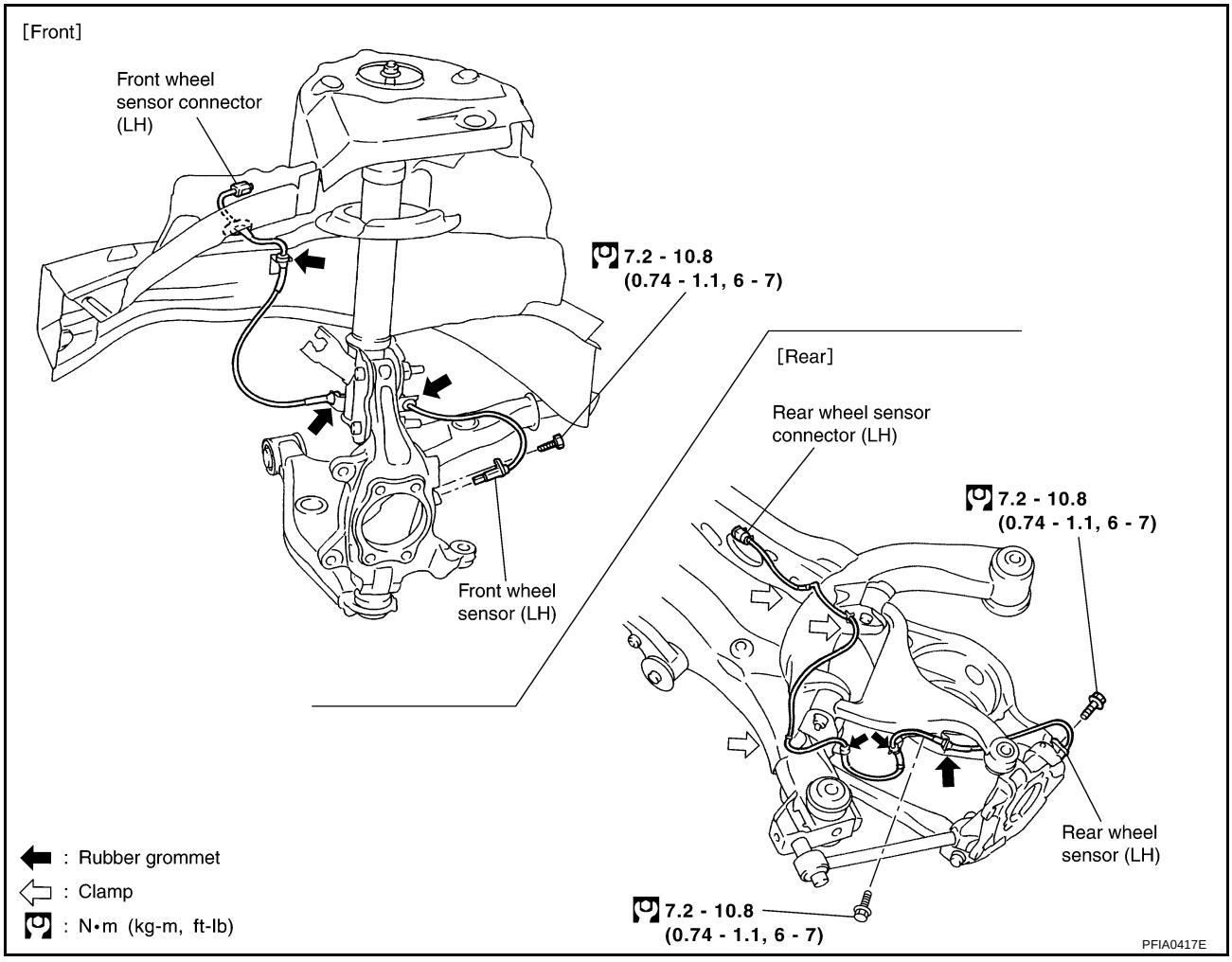

REMOVAL

Be careful of the following.

CAUTION:

- **As much as possible, avoid rotating wheel sensor when removing it. Pull wheel sensors out without pulling on sensor harness.**
- **Take care to avoid damaging wheel sensor edges or rotor teeth. Remove wheel sensor first before removing front or rear wheel hub. This is to avoid damage to wheel sensor wiring and loss of sensor function.**

INSTALLATION

Be careful of the following. Tighten the mounting bolts and nuts to the specified torque. Refer to BRC-40, "Removal and Installation" .

- When installing, make sure there is no foreign material such as iron chips on and in the mounting hole of the wheel sensor. Make sure no foreign material has been caught in the sensor rotor. Remove any foreign material and clean the mount.
- When installing wheel sensor, be sure to press rubber grommets in until they lock at locations shown above in figure. When installed, harness must not be twisted.

SENSOR ROTOR

PFP:47970

Removal and Installation

NFS000FW

REMOVAL

Front

Sensor rotor cannot be disassembled. To replace sensor rotor, replace hub bearing assembly. Refer to FAX-6, "FRONT WHEEL HUB AND KNUCKLE" in “FAX” section.

Rear

Sensor rotor cannot be disassembled. To replace sensor rotor, replace hub bearing assembly. Refer to RAX-5, "WHEEL HUB" in “RAX” section.

INSTALLATION

Installation is the reverse order of removal.

ACTUATOR AND ELECTRIC UNIT (ASSEMBLY)

PFP:47660

Removal and Installation

NFS000FX

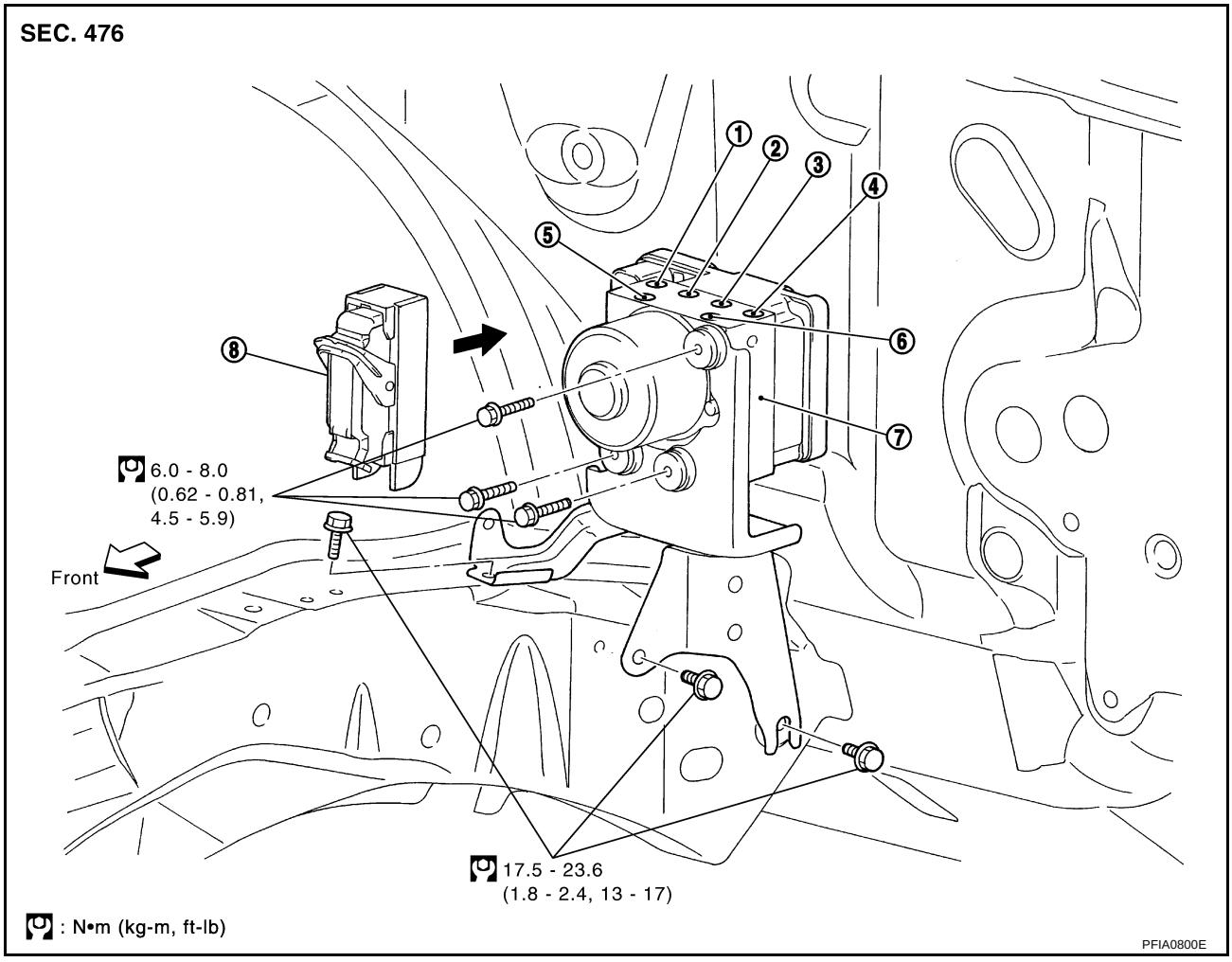

1.	To front left	2.	To rear right	3.	To rear left
4.	To front right	5.	From master cylinder secondary side	6.	From master cylinder primary side
7.	ABS actuator and electric unit (control unit)	8.	Harness connector		

Pay attention to the following when removing actuator.

CAUTION:

- **Before servicing, disconnect battery cables.**
- **To remove brake tube, use flare nut wrench to prevent flare nuts and brake tube from being damaged. To install, use flare nut torque wrench (commercial service tool).**
- **Do not remove and install actuator by holding harness.**
- **After work is completed, bleed air from brake piping. Refer to BR-13, "Bleeding Brake System" .**

PRECAUTIONS

PFP:00001

Precautions for Supplemental Restraint System (SRS) “AIR BAG” and “SEAT BELT PRE-TENSIONER”

NFS000FY

The Supplemental Restraint System such as “AIR BAG” and “SEAT BELT PRE-TENSIONER”, used along with a front seat belt, helps to reduce the risk or severity of injury to the driver and front passenger for certain types of collision. This system includes seat belt switch inputs and dual stage front air bag modules. The SRS system uses the seat belt switches to determine the front air bag deployment, and may only deploy one front air bag, depending on the severity of a collision and whether the front occupants are belted or unbelted.
Information necessary to service the system safely is included in the SRS and SB section of this Service Manual.

WARNING:

- **To avoid rendering the SRS inoperative, which could increase the risk of personal injury or death in the event of a collision which would result in air bag inflation, all maintenance must be performed by an authorized NISSAN/INFINITI dealer.**
- **Improper maintenance, including incorrect removal and installation of the SRS, can lead to personal injury caused by unintentional activation of the system. For removal of Spiral Cable and Air Bag Module, see the SRS section.**
- **Do not use electrical test equipment on any circuit related to the SRS unless instructed to in this Service Manual. SRS wiring harnesses can be identified by yellow and/or orange harnesses or harness connectors.**

Precautions for Brake System

NFS000T8

- Recommended fluid is brake fluid “DOT 3”. Refer toMA-10, "RECOMMENDED FLUIDS AND LUBRICANTS" .
- Do not reuse drained brake fluid.
- Be careful not to splash brake fluid on painted areas.
- To clean or wash all parts of master cylinder, disc brake caliper and wheel cylinder, use clean brake fluid.
- Do not use mineral oils such as gasoline or kerosene. They will ruin rubber parts of the hydraulic system.
- Use a flare nut wrench when removing flare nuts, and use a flare nut crowfoot and torque wrench when tighten brake tube flare nuts.
- Always torque brake lines when installing.
- Before working, turn ignition switch OFF and disconnect electrical connector of ABS actuator and electric control unit (control unit) or battery negative terminal.
- Burnish the brake contact surfaces after refinishing or replacing drums or rotors, after replacing pads or linings, or if a soft pedal occurs at very low mileage.
  Refer to BR-32, "BRAKE BURNISHING PROCEDURE" .

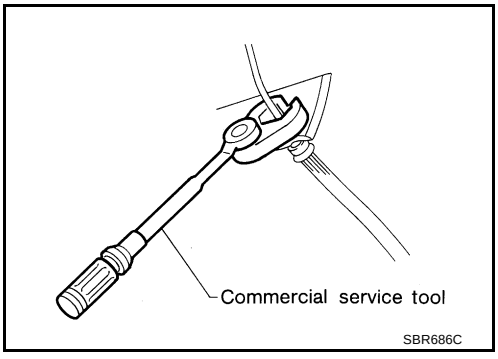

WARNING:

Clean brake pads and shoes with a waste cloth, then wipe with a dust collector.

Precautions for Brake Control

NFS000G0

- During ABS operation, brake pedal lightly vibrates and a mechanical noise may be heard. This is normal.
- Just after starting vehicle after turning ignition switch ON, brake pedal may vibrate or motor operating noise may be heard from engine compartment. This is a normal status of operation check.
- Stopping distance may be longer than that of vehicles without ABS when vehicle drives on rough, gravel, or snow-covered (fresh, deep snow) roads.
- When an error is indicated by ABS or another warning lamp, collect all necessary information from customer (what symptoms are present under what conditions) and check for simple causes before starting diagnostic servicing. Besides electrical system inspection, check brake booster operation, brake fluid level, and fluid leaks.
- If tire size and type are used in an improper combination, or brake pads are not Genuine NISSAN parts, stopping distance or steering stability may deteriorate.

- If there is a radio, antenna, or antenna lead-in wire (including wiring) near control module, ABS function may have a malfunction or error.
- If aftermarket parts (car stereo, CD player, etc.) have been installed, check for incidents such as harness pinches, open circuits, and improper wiring.
- If the following components are replaced with non-genuine components or converted, the VDC OFF indicator lamp and SLIP indicator lamp may turn on or the VDC system may not operate properly. Components related to suspension (Shock Absorber, Strut, Spring, Bushing, etc.), Tires, wheels (exclude specified size), components related to brake (Pad, Rotor, Caliper, etc.), Components related to engine (Muffler, ECM, etc.), Components related to body reinforcement (Roll bar, Tower bar, etc.).
- Driving in the condition of breakage or excessive wear of the suspension, tires or components related to the brakes may cause the VDC OFF indicator lamp and the SLIP indicator lamp to turn on, and the VDC system may not operate properly.
- When the TCS or VDC is activated by sudden acceleration or sudden turn, some noise may occur. The noise is a result of the normal operation of the TCS and VDC.
- When driving on roads which have extreme slopes (such as mountainous roads) or high banks (such as sharp carves on a freeway), the VDC may not operate normally, or the VDC warning lamp and the SLIP indicator lamp may turn on. However, this is not a malfunction if normal operation can be resumed after restarting the engine.
- Sudden turns (such as spin turns, acceleration turns), drifting, etc. When VDC function is OFF (VDC SW ON) may cause the yaw rate/side G sensor system indicate a malfunction. However, this is not a malfunction if normal operation can be resumed after restarting the engine.

PREPARATION

PFP:00002

Commercial Service Tools

NFS000G1

Tool name		Description
1.Flare nut crowfoot a:10 mm (0.39 in)/12 mm (0.47 in) 2.Torque wrench	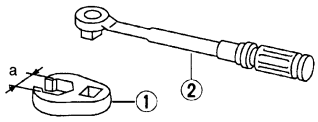 S-NT360	Installing brake tube

ON-VEHICLE SERVICE

PFP:00000

Adjustment of Steering Angle Sensor Neutral Position

NFS000G2

After removing/installing or replacing ABS actuator and electric unit (control unit), steering angle sensor, steering components, suspension components, or after adjusting wheel alignment, make sure to adjust neutral position of steering angle sensor before running vehicle.

×: Required –: Not required

Situation	Adjustment of Steering Angle Sensor Neutral Position
Removing/Installing ABS actuator and electric unit (control unit)	–
Replacing ABS actuator and electric unit (control unit)	×
Removing/Installing steering angle sensor	×
Removing/Installing steering components	×
Removing/Installing suspension components	×
Change tires to new ones	–
Tire rotation	–
Adjustment wheel alignment	×

CAUTION:
To adjust neutral position of steering angle sensor, make sure to use CONSULT-II. (Adjustment can not be done without CONSULT-II.)

1. Stop vehicle with front wheels in straight-ahead position.
2. Perform “CONSULT-II Start Procedure”. Refer to GI-37, "CONSULT-II Start Procedure" .
3. Touch “WORK SUPPORT”.
4. Touch “START”on“ST ANGLE SENSOR ADJUSTMENT”screen.
   CAUTION:
   Do not touch steering wheel while adjusting steering angle sensor.
5. After approximately 10 seconds, touch “END”. (After approximately 60 seconds, it ends automatically.)
6. Turn ignition switch OFF, then turn it ON again.
   CAUTION:
   Be sure to perform above operation.
7. Run vehicle with front wheels in straight-ahead position, then stop.

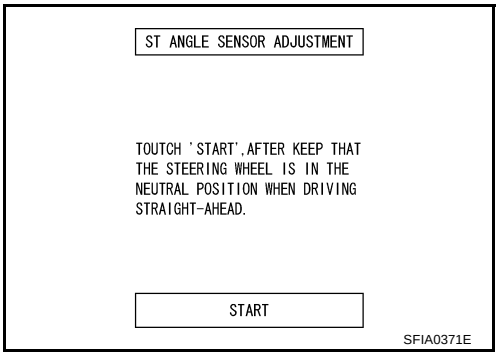

8. Select “DATA MONITOR”, “SELECTION FROM MENU”, and “STR ANGLE SIG” on CONSULT-II screen. Then make sure “STR ANGLE SIG” is within 0±2.5 deg. If value is more than specification, repeat steps 1 to 7.
9. Erase memory of ABS actuator and electric unit (control unit) and ECM.
10. Turn ignition switch OFF.

Calibration of Decel G Sensor

NFS000G3

After removing/installing or replacing yaw rate/side/decel G sensor, ABS actuator and electric unit (control unit) make sure to Calibration of Decel G Sensor before running vehicle.

×: Required –: Not required

Situation	Calibration of Decel G Sensor
Removing/Installing ABS actuator and electric unit (control unit)	×
Removing/Installing steering components	–
Removing/Installing suspension components	–
Change tires to new ones	–
Tire rotation	–
Adjusting wheel alignment	–
Removing/Installing Yaw rate/side/decel G sensor	×

CAUTION:
To adjust neutral position of steering angle sensor, make sure to use CONSULT-II. (Adjustment can not be done without CONSULT-II.)

1. Stop vehicle with front wheels in straight-ahead position.

   CAUTION:
   - **Keep all tires inflated to correct pressures. Adjust the tire pressure to the specified pressure value.**
   - **See that there is on-load in vehicle other than the driver (or equivalent weight placed in driver's position).**
2. Perform “CONSULT-II Start Procedure”. Refer to GI-37, "CONSULT-II Start Procedure" .
3. Touch “WORK SUPPORT”.
4. Touch “START” on “DECEL G SEN CALIBRATION” on CONSULT- II screen.
5. After approximately 10 seconds, touch “END”. (After approximately 60 seconds, it ends automatically.)
6. Turn ignition switch OFF, then turn it ON again.

   CAUTION:
   Be sure to carry out above operation.
7. Run vehicle with front wheels in straight-ahead position, then stop.
8. Select “DATA MONITOR”, “SELECTION FROM MENU”, and “DECEL G SEN” on CONSULT- II screen. Then check that “DECEL G SEN” is within ±0.08 G. If value is more than specification, repeat steps 1 to 5.

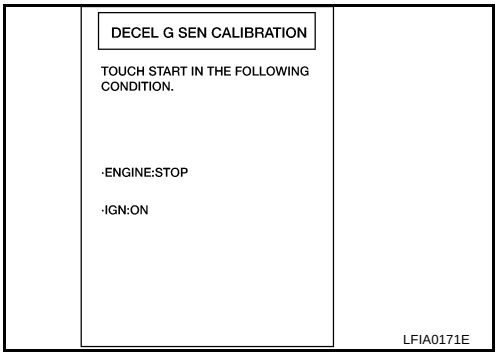

9. Erase memory of ABS actuator and electric unit (control unit) and ECM.
10. Turn ignition switch OFF.

SYSTEM DESCRIPTION

PFP:00000

System Diagram

NFS000G4

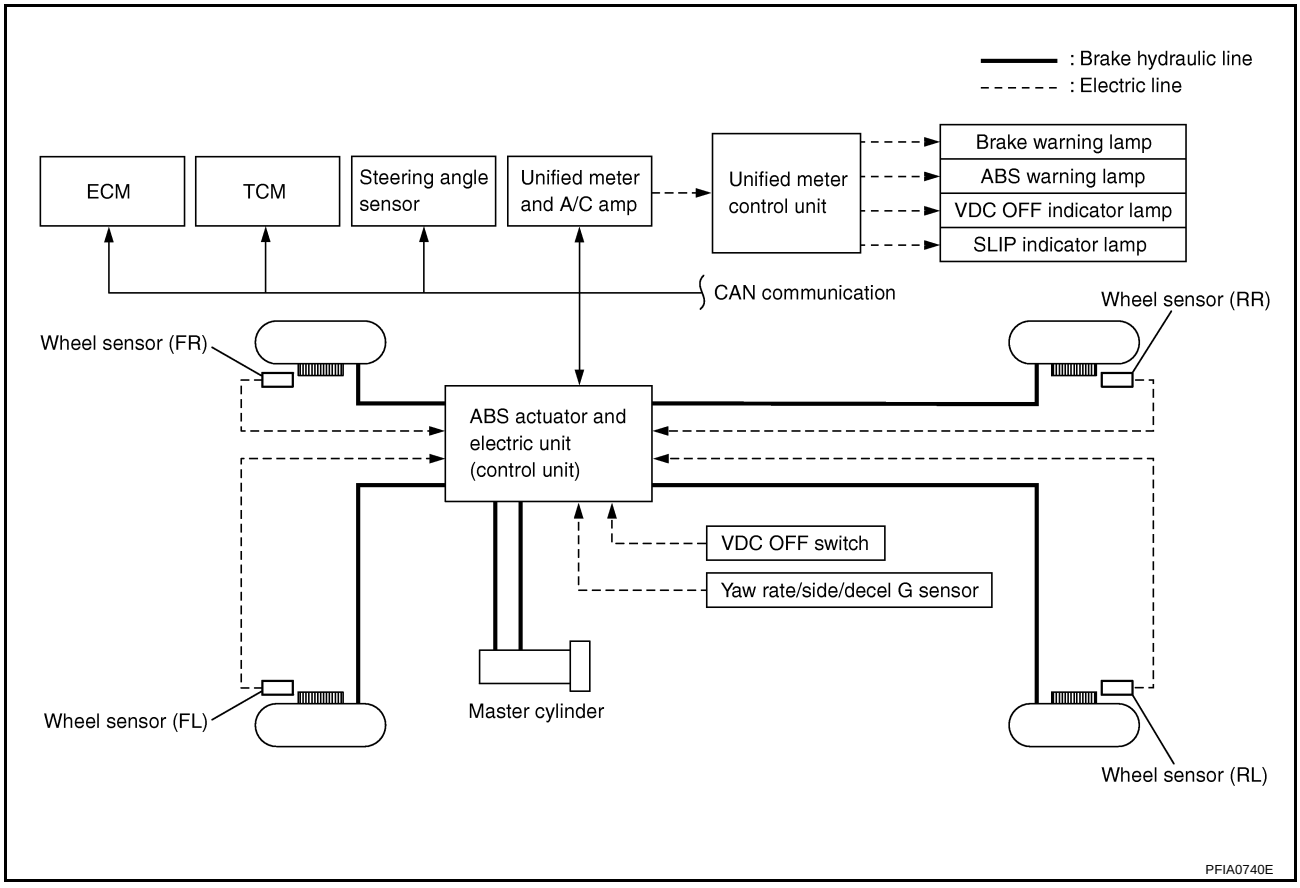

COMPONENTS FUNCTION DESCRIPTION

Components	Description
ABS actuator and electric unit (control unit)	● Receives the information of various sensor signals, engine and AT, and then determines the vehicle driving status. Performs the calculations of target brake fluid pressure, of brake actuator drive signal output and of engine torque required for the VDC/TCS/ABS control. ● Receives the actuator drive signal from ABS actuator and electric unit (control unit), and then performs the brake fluid adjustment of each wheel caliper.
Yaw rate side/decel G sensor	Detects the yaw rate and side G of the vehicle.
Steering angle sensor	Detects the operating angle and direction of driver steering wheel.
Wheel sensor	Detects the rotation speed of each wheel.
VDC OFF switch	Cancels the VDC function.
ECM	Receives the command from ABS actuator and electric unit (control unit), and then performs the controls of throttle motor and injector.

Function

NFS000G6

VDC

- In addition to the TCS/ABS function, the driver steering amount and brake operation amount are detected from the steering angle sensor and pressure sensor, and the vehicle's driving status (amount of under steering / over steering) is determined from information from the yaw rate side/decel G sensor, wheel sensor, etc., and this information is used to improve vehicle stability by controlling the braking and engine power to all four wheels.
- The SLIP indicator lamp flashes to inform the driver of VDC operation.
- During VDC operation, the body and brake pedal lightly vibrate and mechanical noises may be heard. This is normal.
- The ABS warning lamp, VDC OFF indicator lamp, and SLIP indicator lamp might turn on when the vehicle is subject to strong shaking or large vibration, such as when the vehicle is on a turn table or a ship while the engine is running or steep slope such as bank. In this case, restart the engine on a normal road, and if the ABS warning lamp, VDC OFF indicator lamp, and SLIP indicator lamp turn off, there is no malfunction.

TCS

- The wheel spin of the drive wheels is detected by the ABS actuator and electric unit (control unit) from the wheel speed signals from the four wheels, so if wheel spin occurs, the drive wheel right and left brake fluid pressure control and engine fuel cut are conducted while the throttle value is restricted to reduce the engine torque and decrease the amount of wheel spin. In addition, the degree the throttle is opened is controlled to achieve the optimum engine torque.
- Depending on road circumstances, the driver may have a sluggish feel. This is normal, because the optimum traction has the highest priority under TCS operation.
- TCS may be activated any time the vehicle suddenly accelerates, depressing accelerator peal fully, suddenly downshifts, upshifts, or is driven on a road with a varying surface friction coefficient.
- During TCS operation, it informs a driver of system operation by flashing SLIP indicator lamp.

ABS

- The Anti-Lock Braking System is a function that detects wheel revolution while braking, and it improves handling stability during sudden braking by electrically preventing 4 wheel lock. Maneuverability is also improved for avoiding obstacles.
- If the electrical system malfunction, then Fail-Safe function is activated, ABS becomes inoperative, and ABS warning lamp turns on.
- Electrical system diagnosis by CONSULT-II is available.
- During ABS operation, brake pedal lightly vibrates and a mechanical noise may be heard. This is normal.
- Just after starting vehicle after ignition switch ON, brake pedal may vibrate or motor operating noise may be heard from engine compartment. This is a normal status of operation check.
- Stopping distance may be longer than that of vehicles without ABS when vehicle drives on rough, gravel, or snow-covered (fresh, deep snow) roads.

EBD

- Electronic Brake Distribution is a function that detects subtle slippages between front and rear wheels during braking, and it improves handling stability by electronically controlling Brake Fluid Pressure which results in reduced rear wheel slippage.
- In case of electrical system malfunction, Fail-Safe function is activated, EBD and ABS becomes inoperative, and ABS warning lamp and brake warning lamp are turned on.
- Electrical system diagnosis by CONSULT-II is available.
- During EBD operation, brake pedal lightly vibrates and a mechanical noise may be heard. This is normal.
- Just after starting vehicle after ignition switch ON, brake pedal may vibrate or motor operating noise may be heard from engine compartment. This is a normal status of operation check.
- Stopping distance may be longer than that of vehicles without EBD when vehicle drives on rough, gravel, or snow-covered (fresh, deep snow) roads.

Hydraulic Circuit Diagram

NFS000GB

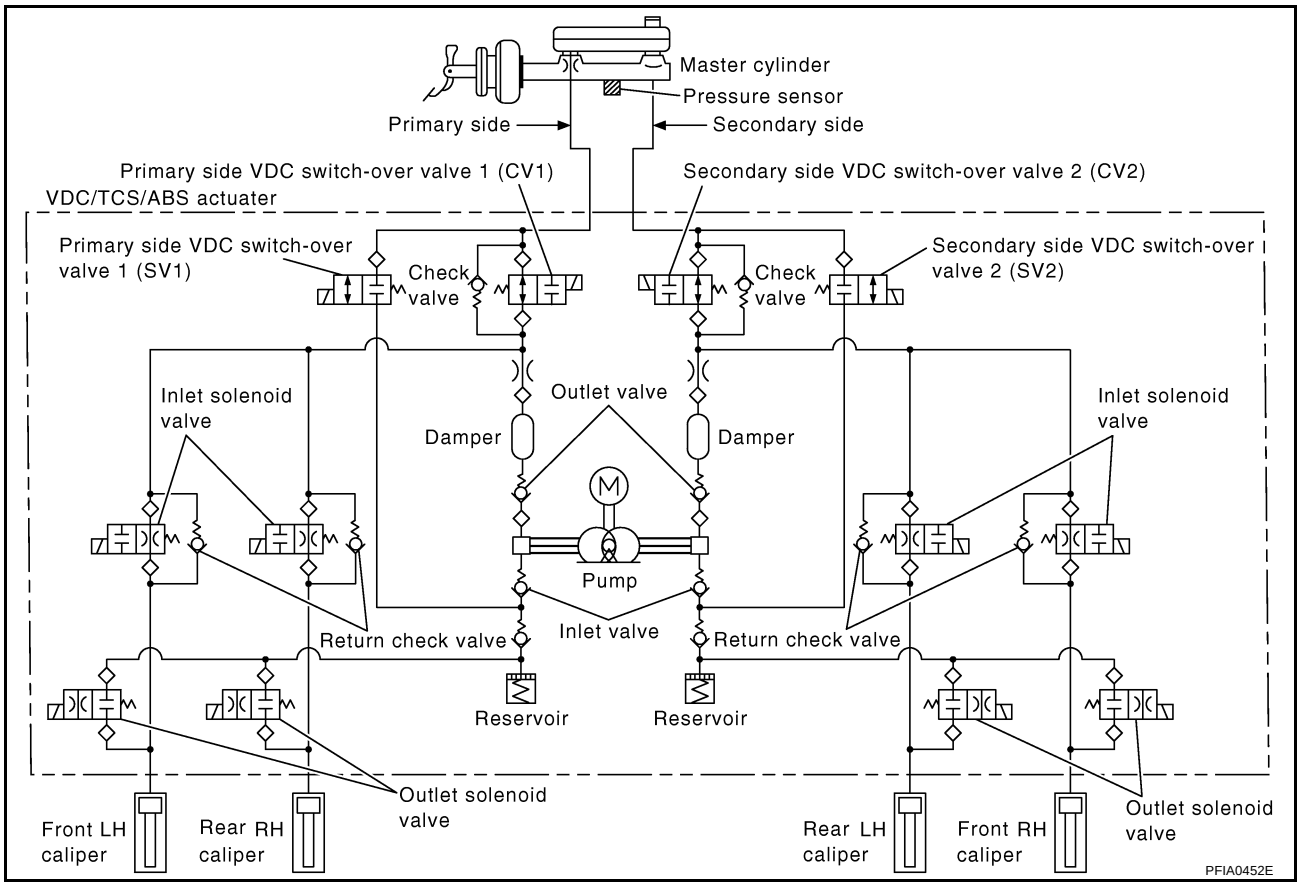

HYDRAULIC COMPONENTS FUNCTION DESCRIPTION

Components	Description
Solenoid valve (ABS control valve)	Increases, maintains and decreases the fluid pressure of each caliper according to the signal from VDC/TCS/ABS control unit.
Reservoir	When decreasing the caliper pressure, temporarily saves the brake fluid drained form the caliper in order to perform the work efficiently.
Pump	Refills the brake fluid saved in the reservoir via the damper to the caliper.
Motor	Operates the pump according to the signal from VDC/TCS/ABS control unit.
Inlet valve	Leaves the brake fluid drained from the reservoir to the pump so as not to return it to the reservoir.
Outlet valve	Leaves the brake fluid drained from the pump so as not to return it to the pump.
Return check valve	When releasing the brake, bypasses with the orifice of solenoid valve, and then refills the brakefluid of caliper to the master cylinder.
Damper	Controls the pulsation of brake fluid drained from the pump, and then weakens the pedal vibration during VDC/TCS/ABS operation.
VDC switch-over valve (CV)	Shuts out the normal brake passage from master cylinder during VDC/TCS operation.
VDC switch-over valve (SV)	Supplies the brake fluid from master cylinder to the pump during VDC/TCS operation.

CAN Communication

NFS000GC

SYSTEM DESCRIPTION

CAN (Controller Area Network) is a serial communication line for real time application. It is an on-vehicle multiplex communication line with high data communication speed and excellent error detection ability. Many electronic control units are equipped onto a vehicle, and each control unit shares information and links with other control units during operation (not independent). In CAN communication, control units are connected with 2 communication lines (CAN H line, CAN L line) allowing a high rate of information transmission with less wiring. Each control unit transmits/receives data but selectively reads required data only. Refer to LAN-49, "CAN System Specification Chart" .

TROUBLE DIAGNOSIS

PFP:00004

Fail-Safe Function

NFS000LE

VDC/TCS SYSTEM

In case of malfunction with TCS, the VDC OFF indicator lamp and SLIP indicator lamp are turned on, and the condition of the vehicle is the same as the condition of vehicles without VDC/TCS system. In case of malfunction with TCS, the ABS control continues to operate normally without VDC/TCS control.

CAUTION:
If the Fail-Safe function is activated, then perform the Self Diagnosis for VDC/TCS/ABS control system.

ABS, EBD SYSTEM

In case of electrical malfunction with the ABS, the ABS warning lamp, VDC OFF indicator lamp and SLIP indicator lamp will turn on. In case of electrical malfunction with the EBD, Brake warning lamp, ABS warning lamp, VDC OFF indicator lamp and SLIP indicator lamp will turn on. Simultaneously, the VDC/TCS/ABS become one of the following conditions of the Fail- Safe function.

- For ABS malfunction, only the EBD is activated and the condition of the vehicle is the same condition of vehicles without TCS/ABS system.

  NOTE:
  ABS self-diagnosis sound may be heard. That is a normal condition because a self-diagnosis for “Ignition switch ON” and “The first starting” are being performed.
- For EBD malfunction, the EBD and ABS become inoperative, and the condition of the vehicle is the same as the condition of vehicles without VDC/TCS/ABS, EBD system.

How to Perform Trouble Diagnosis for Quick and Accurate Repair

NFS000GD

INTRODUCTION

- Most important point to perform diagnosis is to understand systems (control and mechanism) in vehicle thoroughly.
- It is also important to clarify customer complaints before inspection.
  First of all, reproduce symptom, and understand it fully.
  Ask customer about his/her complaints carefully. In some cases, it will be necessary to check symptom by driving vehicle with customer.

  NOTE:
  Customers are not professionals. Do not assume “maybe customer means...” or “maybe customer mentioned this symptom”.

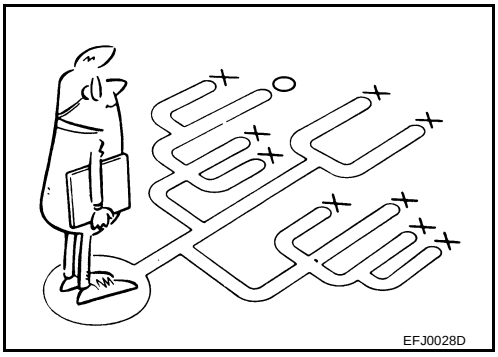
EFJ0028D

- It is essential to check symptoms right from beginning in order to repair a malfunction completely.
  For an intermittent malfunction, it is important to reproduce symptom based on interview with customer and past examples. Do not perform inspection on ad hoc basis. Most intermittent malfunctions are caused by poor contacts. In this case, it will be effective to shake suspected harness or connector by hand. When repairs are performed without any symptom check, no one can judge if malfunction has actually been eliminated.
- After diagnosis, make sure to perform “erase memory”. Refer to BRC-67, "ERASE MEMORY" .
- For an intermittent malfunction, move harness or harness connector by hand to check poor contact or false open circuit.

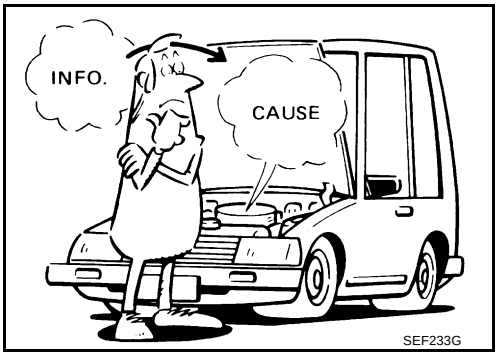

SEF233G

- Always read “GI General Information” to confirm general precautions. Refer to GI-4, "General Precautions" .

DIAGNOSIS FLOW CHART

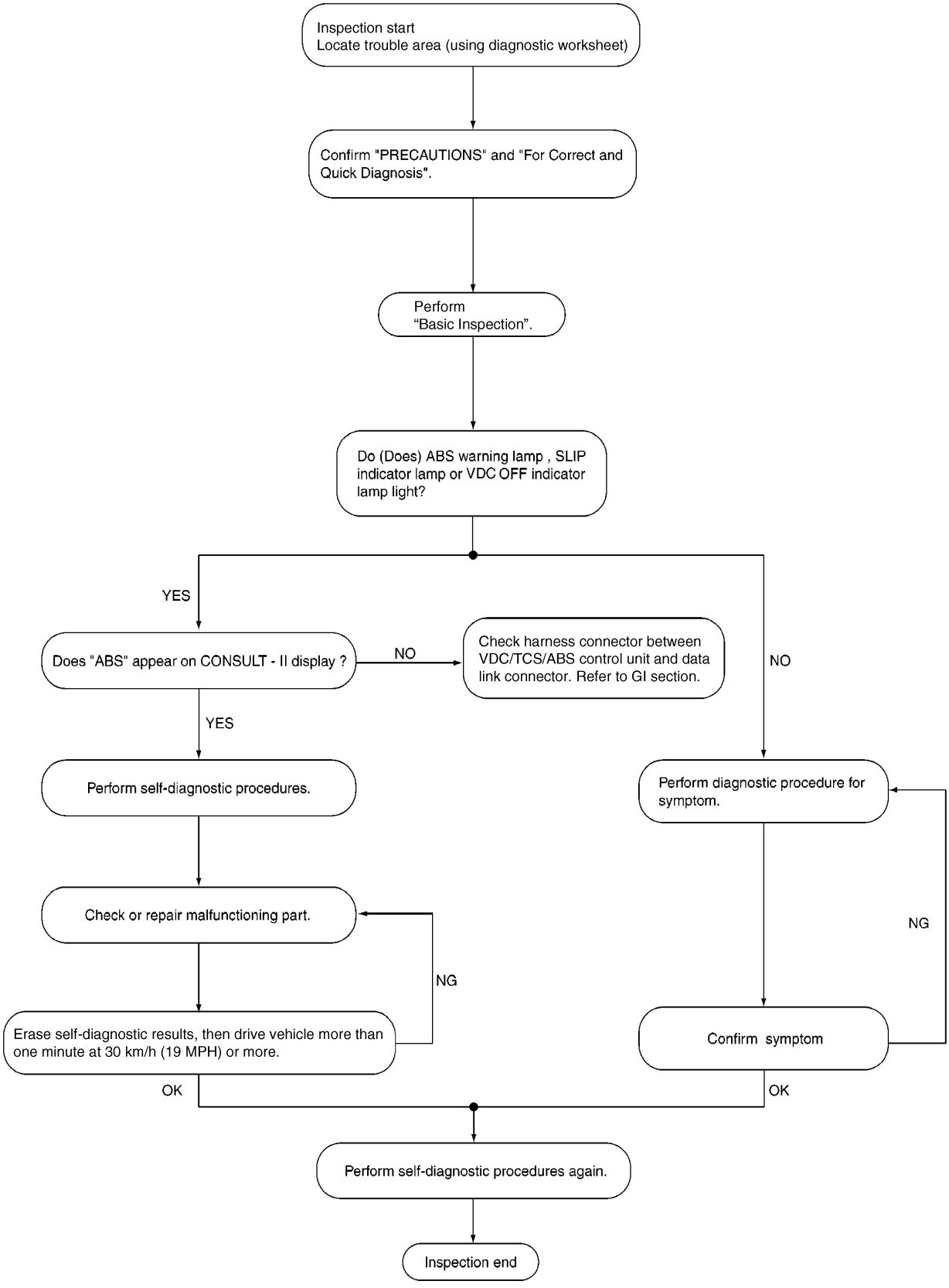

SFIA3272E

ASKING COMPLAINTS

- Complaints against malfunction vary depending on each person. It is important to clarify customer complaints.
- Ask customer about what symptoms are present and under what conditions. Use information to reproduce symptom while driving.
- It is also important to use the diagnosis sheet so as not to miss information.

KEY POINTS

WHAT ..... Vehicle model
WHEN ..... Date, Frequencies
WHERE ..... Road conditions
HOW ..... Operating conditions, Weather conditions, Symptoms

SBR339B

EXAMPLE OF DIAGNOSIS SHEET

Customer name MR/MS	Model & Year		VIN
Engine #	Trans.		Mileage
Incident Date	Manuf. Date		In Service Date
Symptoms	☐ Noise and vibration (from engine compartment) ☐ Noise and vibration (from axle)	☐ Warning / Indicator activate	☐ Firm pedal operation Large stroke pedal operation
	☐ ABS does not work (Wheels lock when braking)	☐ Lack of sense of acceleration	
Engine conditions	☐ When starting ☐ After starting		
Road conditions	☐ Low friction road (☐Snow ☐Gravel ☐Other) ☐ Bumps / potholes		
Driving conditions	☐ Full-acceleration ☐ High speed cornering ☐ Vehicle speed: Greater than 10 km/h (6 MPH) ☐ Vehicle speed: 10 km/h (6 MPH) or less ☐ Vehicle is stopped		
Applying brake conditions	☐ Suddenly ☐ Gradually		
Other conditions	☐ Operation of electrical equipment ☐ Shift change ☐ Other descriptions		

SFIA3264E

Component Installation Location

NFS000GE

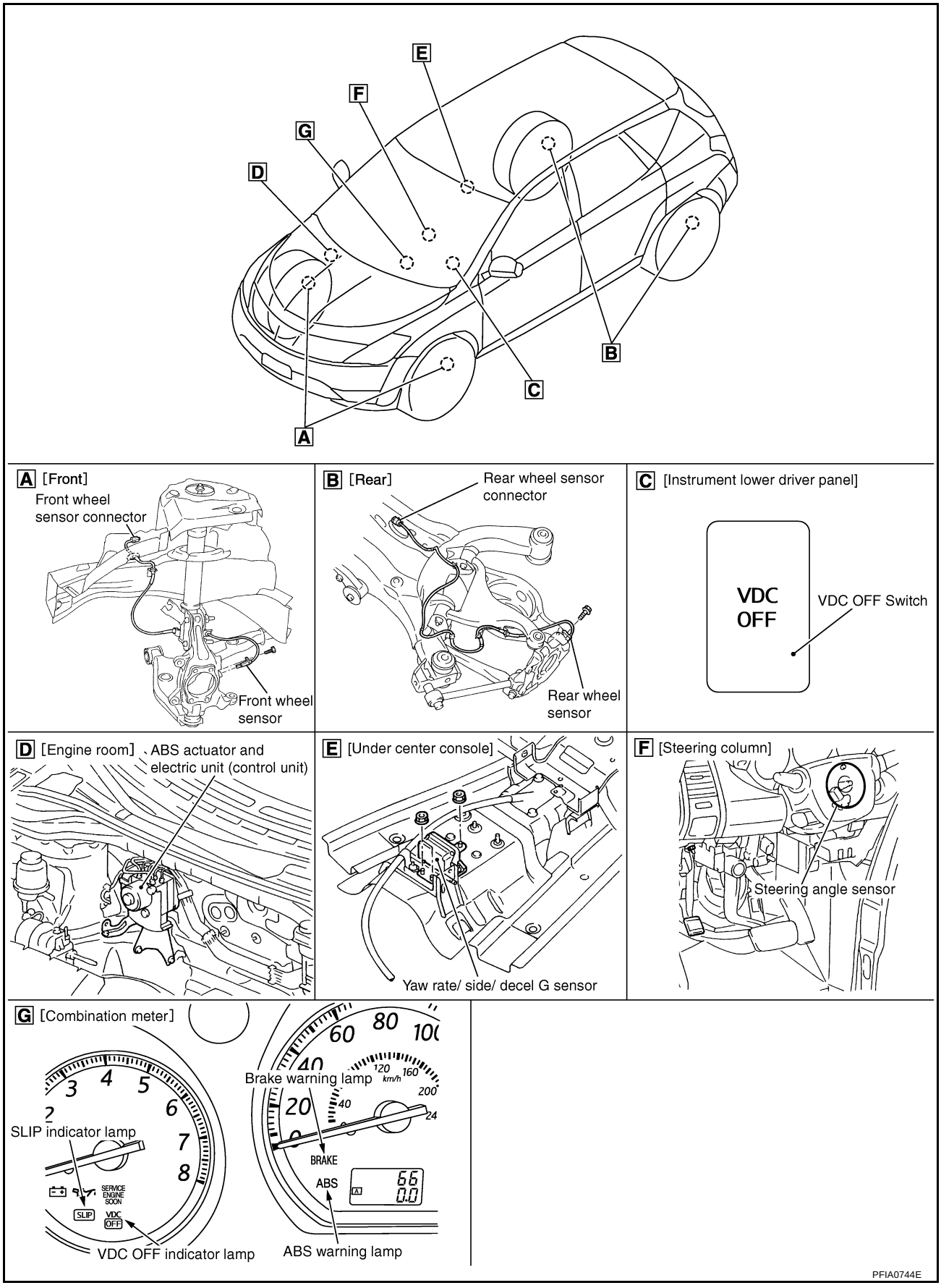

Schematic

NFS000GF

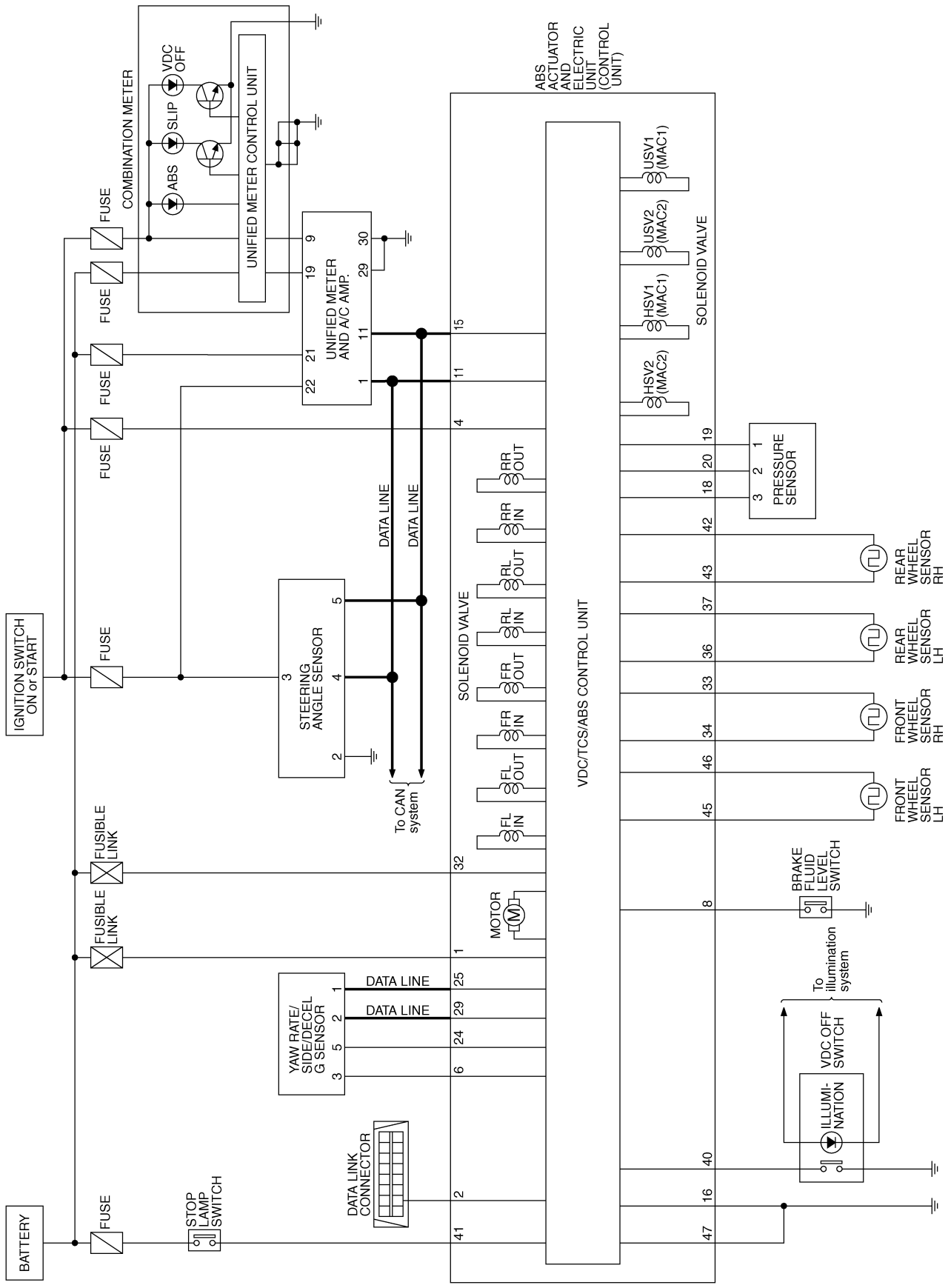

Wiring Diagram — VDC —

NFS000GG

BRC-VDC-01

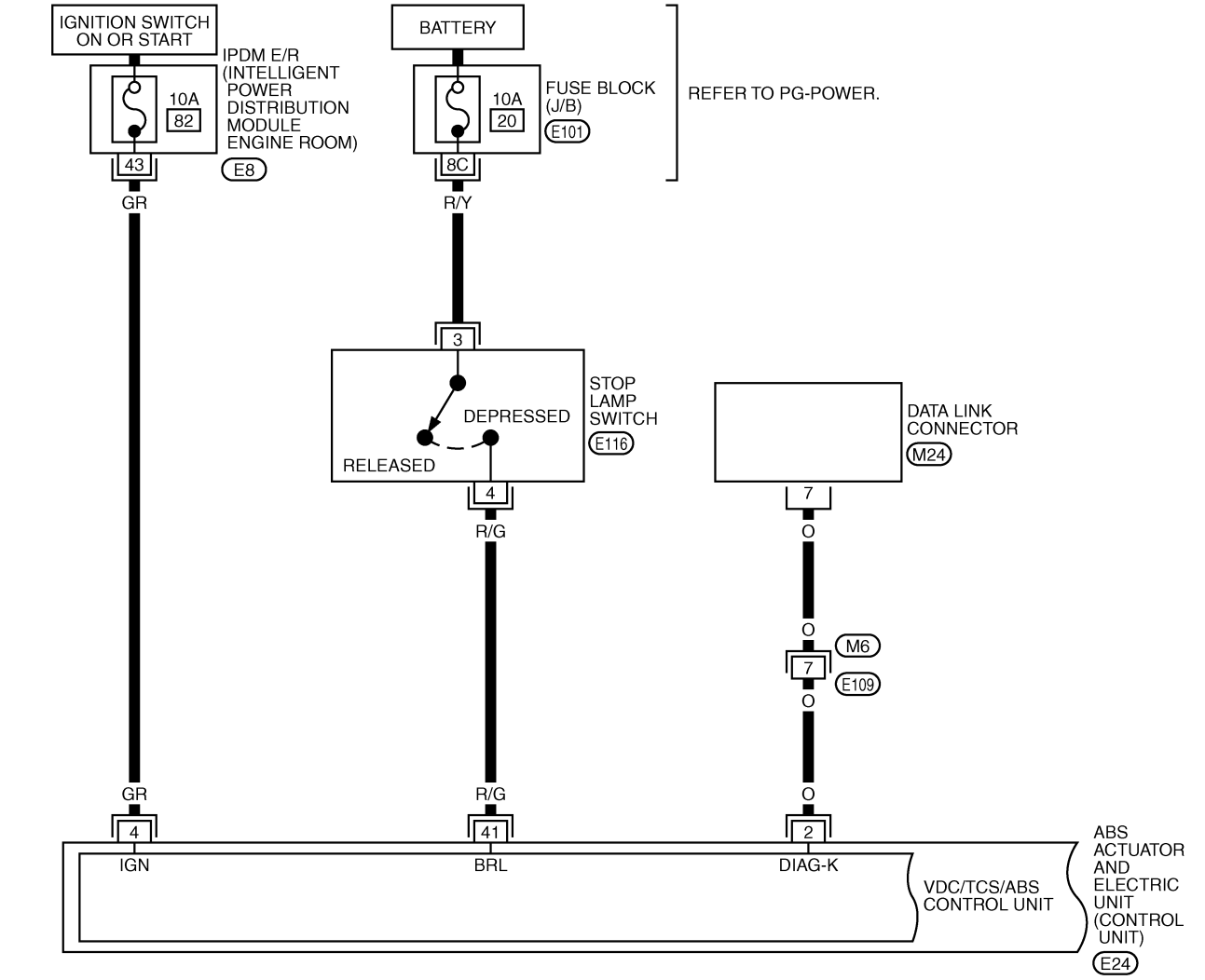

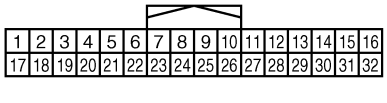

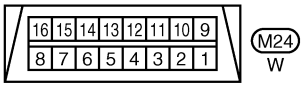

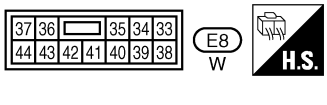

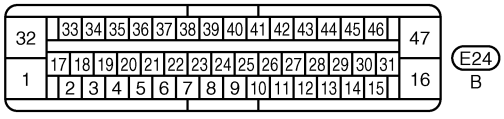

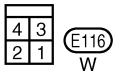

REFER TO THE FOLLOWING.

E101 -FUSE BLOCK-JUNCTION BOX (J/B)

TFWB0119E

BRC-VDC-02

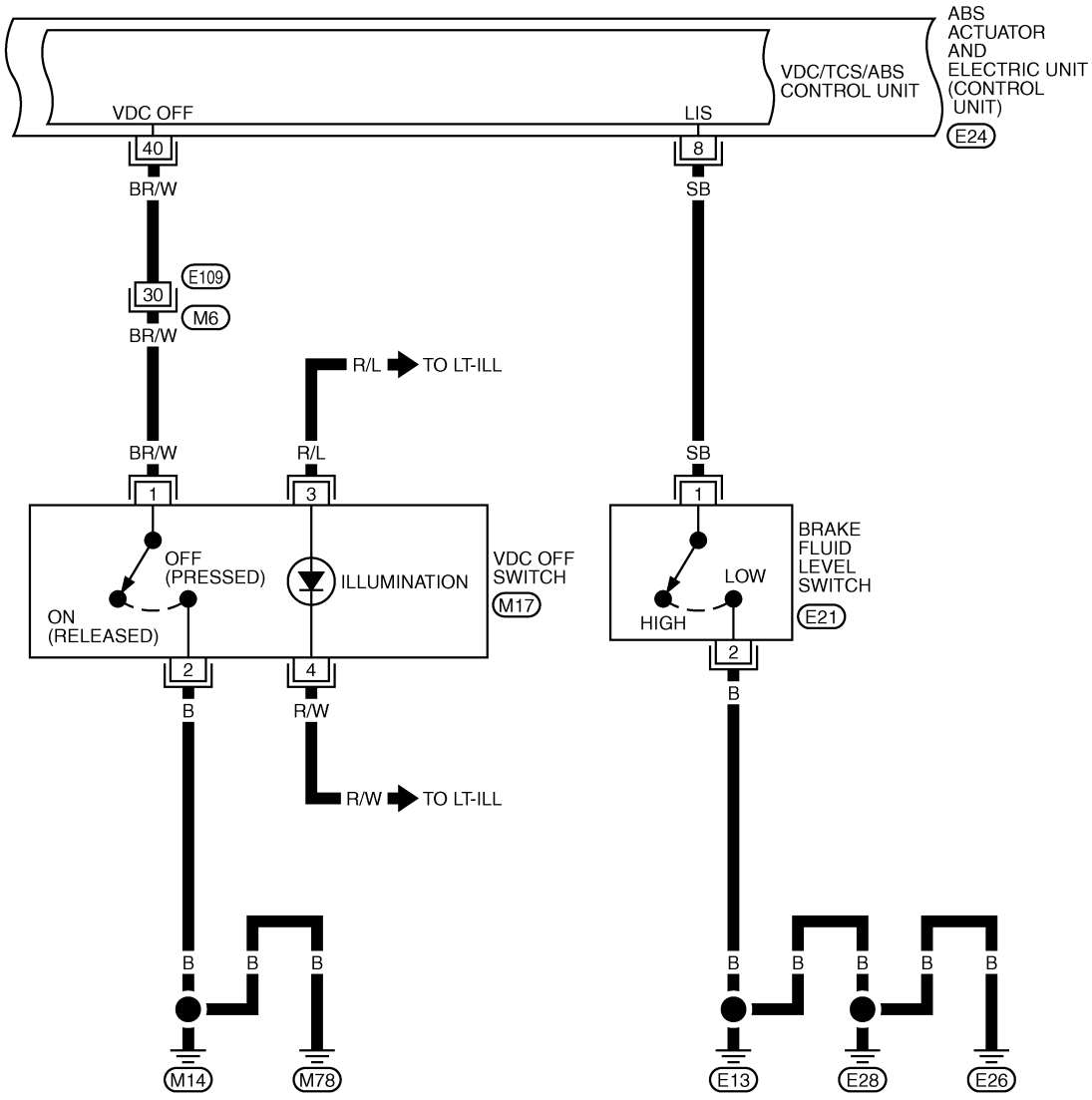

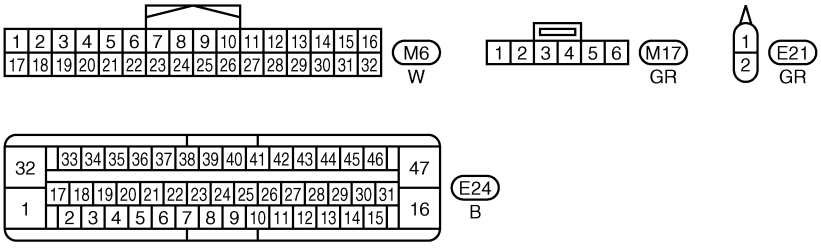

TFWB0038E

BRC-VDC-03

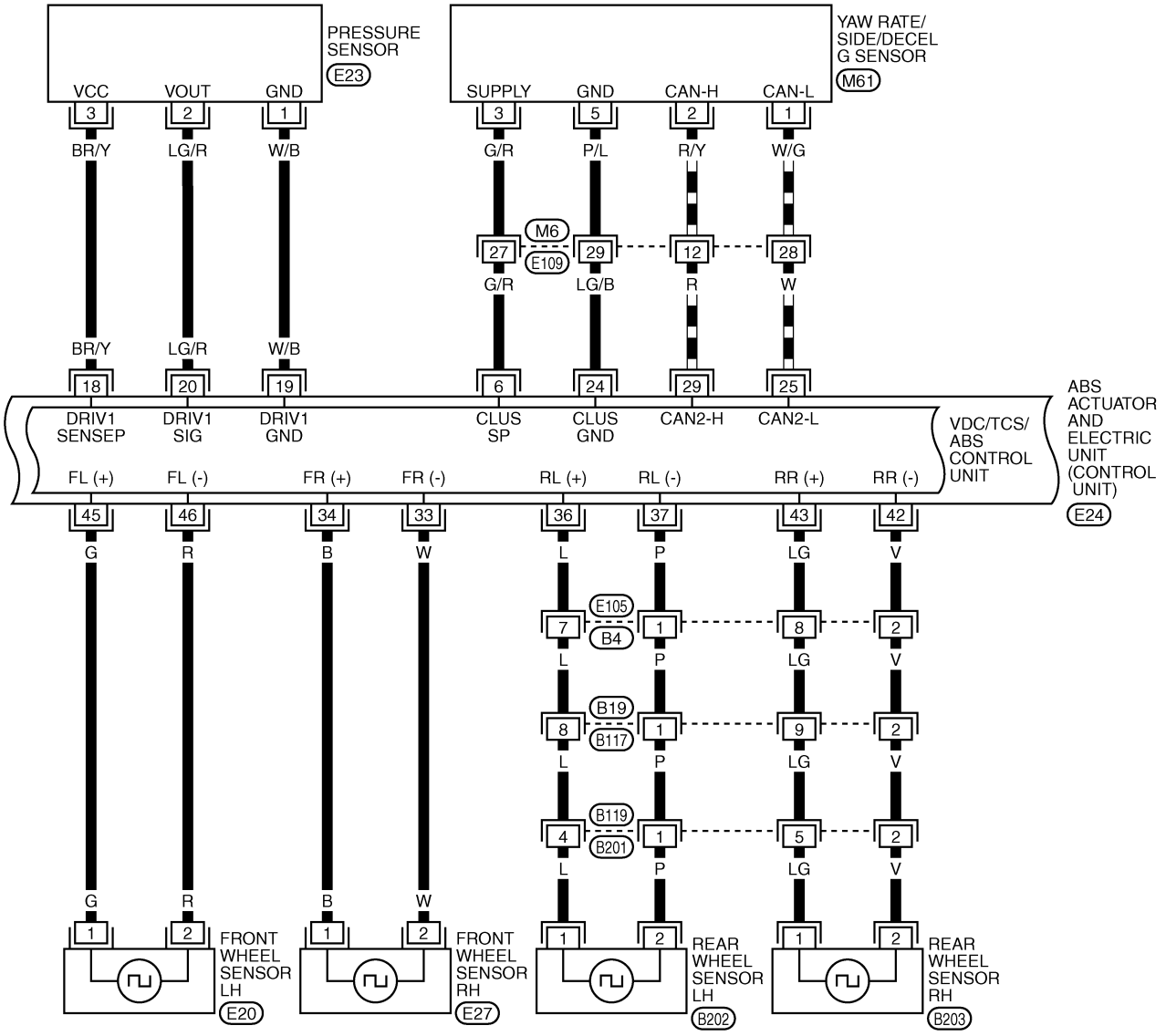

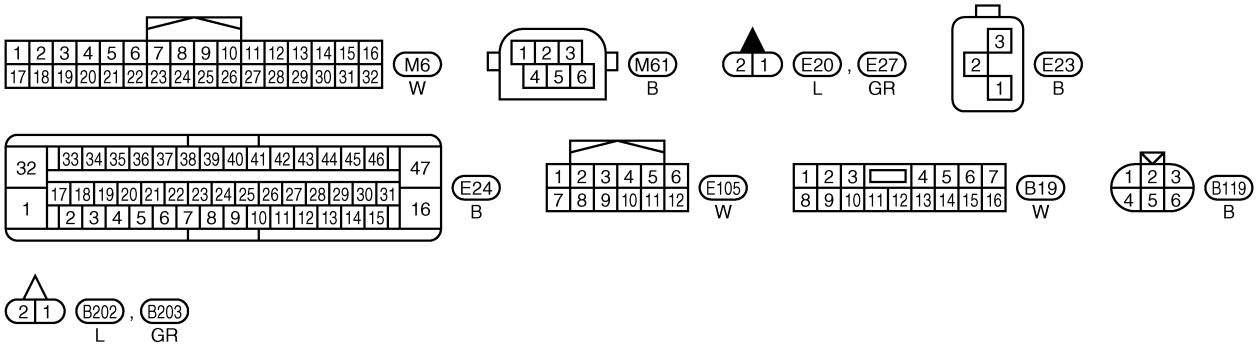

TFWB0039E

BRC-VDC-04

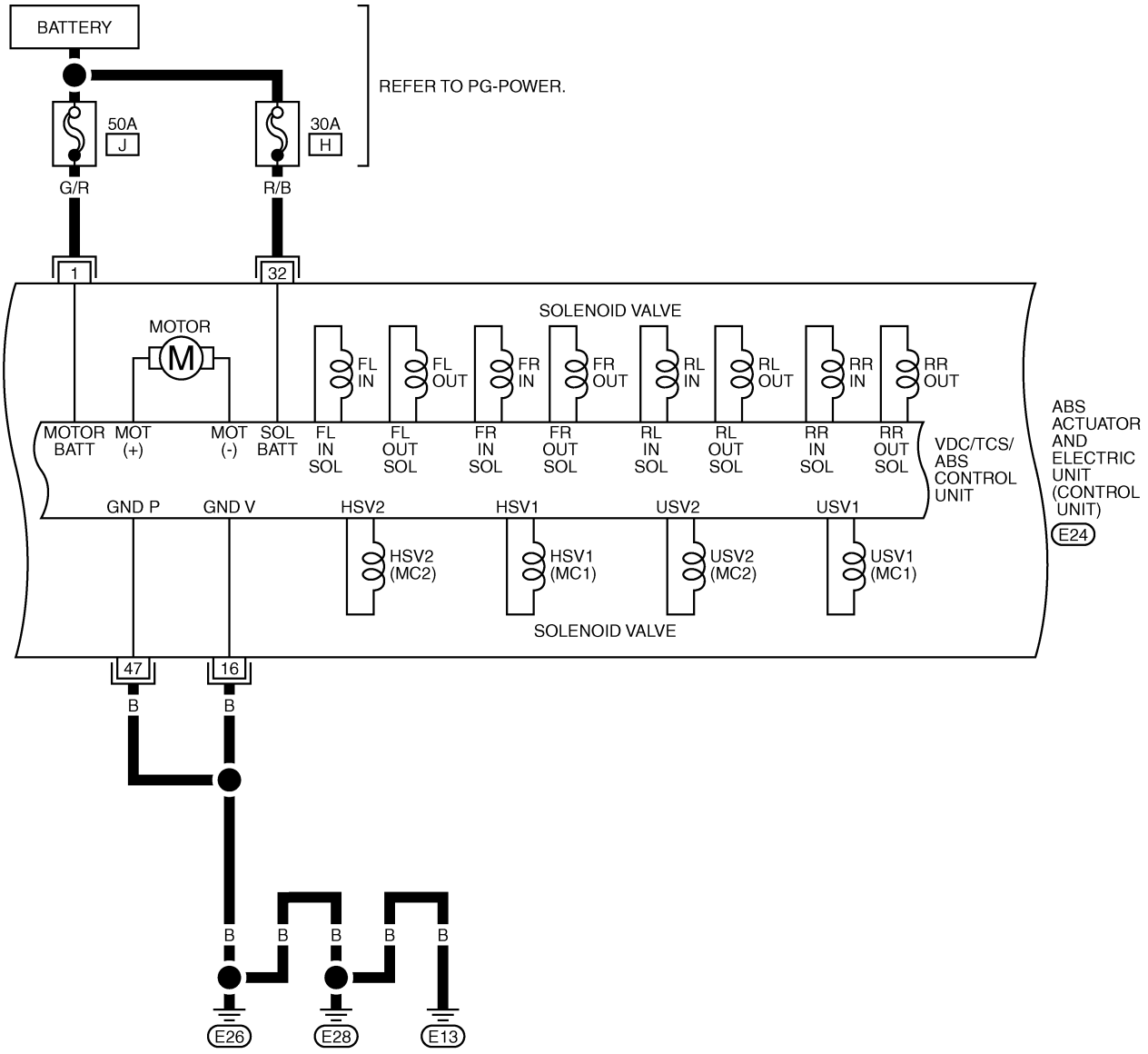

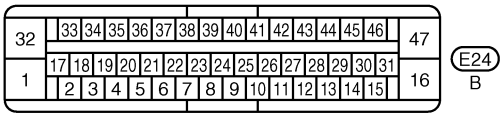

TFWA0069E

BRC-VDC-05

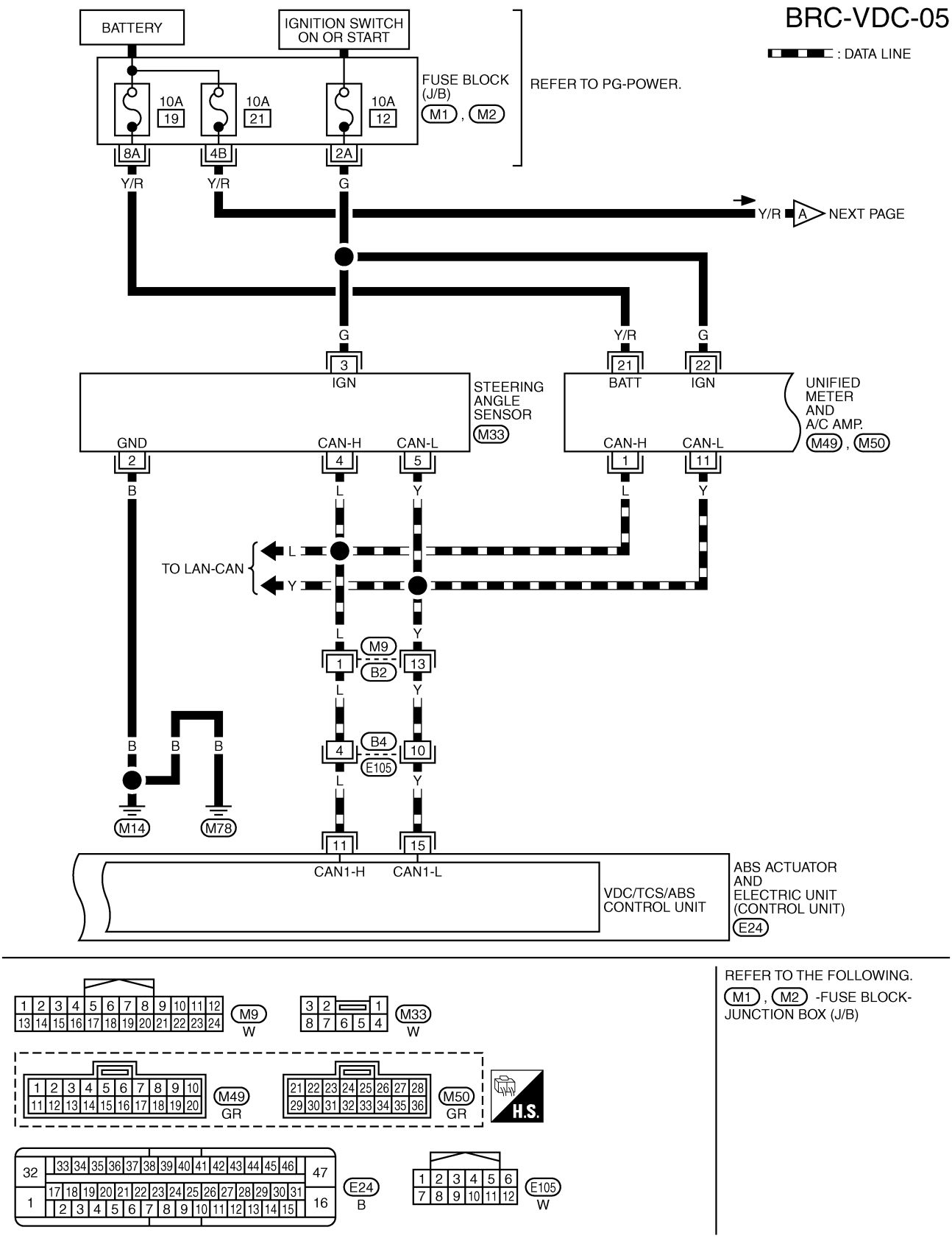

TFWB0040E

BRC-VDC-06

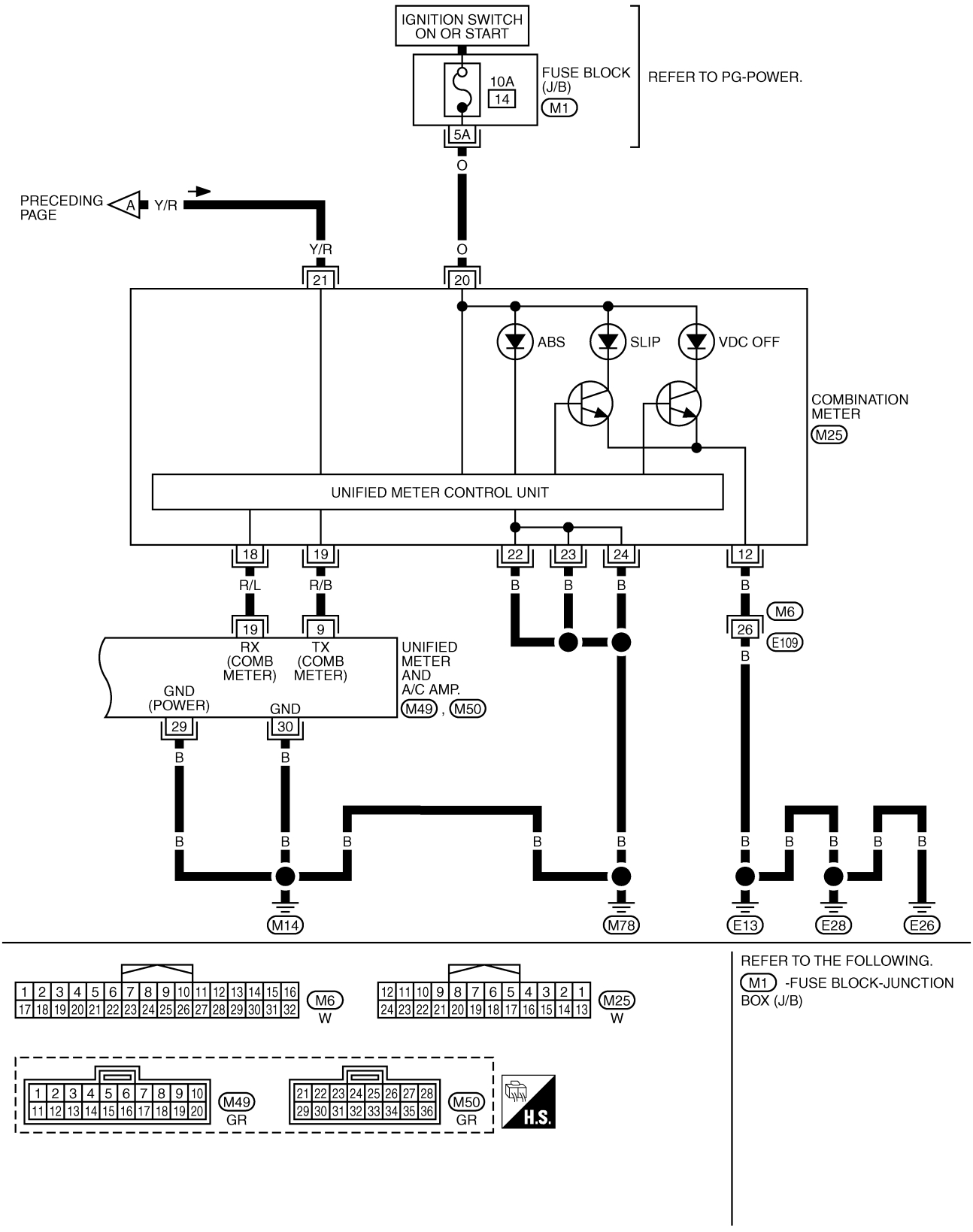

TFWB0120E

Control Unit Input/Output Signal Standard

NFS000GH

REFERENCE VALUE FROM CONSULT-II

CAUTION:

The display shows the control unit calculation data, so a normal value might be displayed even in the event the output circuit (harness) is open or short - circuited.

Monitor item	Display content	Data monitor	
		Condition	Reference value in normal operation
SLCT LVR POSI	Select shift position	CVT shift position = P, R, D, L, N position	Display selected shift position one of P, R, D, L, and N.
		S position	##
FR RH SENSOR FR LH SENSOR RR RH SENSOR RR LH SENSOR	Wheel speed	Vehicle stopped	0 [km/h (MPH)]
		Vehicle running (Note 1)	Almost in accordance with speedometer display (within ± 10%)
ACCEL POS SIG	Open/close condition of throttle valve (linked with accelerator pedal).	Accelerator pedal not depressed (Engine stopped)	0%
		Depress accelerator pedal (Engine stopped)	0 - 100%
ENGINE SPEED	With engine running	With engine stopped	0 rpm
		Engine running	Almost in accordance with tachometer display
STR ANGLE SIG	Steering angle detected by steering angle sensor	Straight-ahead	Approx. 0°
		Steering wheel turned	–756 - 756°
YAW RATE SEN	Yaw rate detected by yaw rate/side decel G sensor	Vehicle stopped	Approx. 0 d/s
		Vehicle running	–100 - 100 d/s
SIDE G SENSOR	Transverse G detected by yaw rate/side decel G sensor	Vehicle stopped	Approx. 0 m/s^2
		Vehicle running	–16.7 - 16.7 m/s^2
PRESS SENSOR	Brake fluid pressure detected by pressure sensor	With ignition switch turned ON and brake pedal released	Approx. 0 bar
		With ignition switch turned ON and brake pedal depressed	– 0 to 170 bar
BATTERY VOLT	Battery voltage supplied to ABS actuator and electric unit (control unit)	Ignition switch ON	10 - 16 V
STOP LAMP SW	Brake pedal operation	Brake pedal depressed	ON
		Brake pedal not depressed	OFF
OFF SW	VDC OFF switch ON/OFF status	VDC OFF switch ON (When VDC OFF indicator lamp is ON)	ON
		VDC OFF switch OFF (When VDC OFF indicator lamp is OFF)	OFF
ABS WARN LAMP	ABS warning lamp ON condition (Note 2)	ABS warning lamp ON	ON
		ABS warning lamp OFF	OFF
MOTOR RELAY	Operation status of motor and motor relay	Ignition switch ON or engine running (ABS not operated)	OFF
		Ignition switch ON or engine running (ABS operated)	ON
ACTUATOR RLY	Actuator relay operation status	Vehicle stopped (Ignition switch ON)	OFF
		Vehicle stopped (Engine running)	ON

Monitor item	Display content	Data monitor	
		Condition	Reference value in normal operation
OFF LAMP	VDC OFF indicator lamp status (Note 3)	When VDC OFF indicator lamp is ON	ON
		When VDC OFF indicator lamp is OFF	OFF
SLIP LAMP	SLIP indicator lamp status (Note 4)	When SLIP indicator lamp is ON	ON
		When SLIP indicator lamp is blinking	
		When SLIP indicator lamp is OFF	OFF
FR LH IN SOL FR LH OUT SOL FR RH IN SOL FR RH OUT SOL RR RH IN SOL RR RH OUT SOL RR LH IN SOL RR LH OUT SOL	Solenoid valve operation	Actuator (solenoid) is active (“ACTIVE TEST” with CONSULT-II) or actuator relay is inactive (in fail-safe mode).	ON
		When actuator (solenoid) is not active and actuator relay is active (ignition switch ON).	OFF
CV1 CV2 SV1 SV2	VDC/TCS switch-over valve status	When actuator (switch-over valve) is active (“ACTIVE TEST” with CONSULT-II) or actuator relay is inactive (when in fail-safe mode).	ON
		When actuator (switch-over valve) is not active and actuator relay is active (ignition switch ON).	OFF
DECEL G-SEN	Longitudinal acceleration detected by decel G Sensor (Note5)	Vehicle stopped	Approx. 0G
		Vehicle running	-1.7 - +1.7G
FLUID LEV SW	ON/OFF status of brake fluid level switch	When brake fluid level switch ON	ON
		When brake fluid level switch OFF	OFF
VDC FAIL SIG TCS FAIL SIG ABS FAIL SIG EBD FAIL SIG	Fail signal status	VDC fail TCS fail ABS fail EBD fail	ON
		VDC normal TCS normal ABS normal EBD normal	OFF
EBD WARN LAMP	Brake warning lamp on condition (Note 6)	Brake warning lamp ON	ON
		Brake warning lamp OFF	OFF
EBD SIGNAL	EBD operation	EBD active	ON
		EBD not active	OFF
ABS SIGNAL	ABS operation	ABS active	ON
		ABS not active	OFF
TCS SIGNAL	TCS operation	TCS active	ON
		TCS not active	OFF
VDC SIGNAL	VDC operation	VDC active	ON
		VDC not active	OFF
CRANKING SIG	CRANKING status	Cranking	ON
		Not cranking	OFF
4WD FAIL REQ	ETS fail status (Note 5)	ETS fail	ON
		ETS normal	OFF
2WD/4WD	Drive axle	2WD model	2WD
		AWD model	4WD

Note 1: Confirm tire pressure is normal.
Note 2: ON/OFF timing of ABS warning lamp
ON: After ignition switch is turned ON, or when a malfunction is detected.
OFF: After ignition switch is turned ON (when system is in normal operation) condition by VDC.
Note 3: ON/OFF timing of VDC OFF indicator lamp
ON: After ignition switch is turned ON, or when a malfunction is detected and VDC OFF switch is ON.
OFF: After ignition switch is turned ON (when system is in normal operation.) And when VDC OFF switch is OFF.
Note 4: ON/OFF timing of SLIP indicator lamp
ON: After ignition switch is turned ON, or when a malfunction is detected.
OFF: After ignition switch is turned ON (when system is in normal operation) and VDC/TCS function is not activated.
Blinking: VDC/TCS function is active during driving
Note 5: Only AWD models.
Note 6: Serves as EBD warning lamp.

CONSULT-II Functions (ABS)

NFS000GI

CONSULT-II MAIN FUNCTION

CONSULT-II can display each diagnostic item using the diagnostic test modes shown following.

Diagnostic test mode	Function	Reference
WORK SUPPORT	This mode enables a technician to adjust some devices faster and more accurately by following the indications on CONSULT-II.	BRC-46
SELF-DIAG RESULTS	Self-diagnostic results can be read and erased quickly.	BRC-65
DATA MONITOR	Input/Output data in the ABS actuator and electric unit (control unit) can be read.	BRC-68
CAN DIAG SUPPORT MNTR	The results of transmit/receive diagnosis of communication can be read.	LAN-44
ACTIVE TEST	Diagnostic Test Mode in which CONSULT-II drives some actuators apart from the ABS actuator and electric unit (control unit) and also shifts some parameters in a specified range.	BRC-70
FUNCTION TEST	Performed by CONSULT-II instead of a technician to determine whether each system is “OK” or “NG”.	—
ECU PART NUMBER	ABS actuator and electric unit (control unit) part number can be read.	BRC-71

CONSULT-II SETTING PROCEDURE

Refer to GI-37, "CONSULT-II Start Procedure" .

Self-diagnosis

NFS000T4

DESCRIPTION

If an error is detected in the system, ABS warning lamp, VDC OFF indicator lamp, SLIP indicator lamp on the combination meter turn on. In this case, perform self-diagnosis as follows.

OPERATION PROCEDURE

1. Perform “CONSULT-II Start Procedure”. Refer to GI-37, "CONSULT-II Start Procedure" .
2. Start engine and drive at approximately 30 km/h (19 MPH) or more for approximately 1 minute.
3. After stopping the vehicle, with engine running at idle speed, touch “SELF-DIAG RESULTS” in order on the CONSULT-II screen.

   CAUTION:
   - **If there is no error during CONSULT-II use, ABS warning lamp, VDC OFF indicator lamp, SLIP indicator lamp may be turned ON/OFF.**
   - **If “START (NISSAN BASED VHCL)” is touched immediately after starting engine or turning on ignition switch, “ABS” might not be displayed in the “SELECT SYSTEM” screen. In this case, repeat the operation from step 1.**
4. The self-diagnostic results are displayed. (If necessary, the self-diagnostic results can be printed out by touching “PRINT”.)
   - When “NO FAILURE” is displayed, check ABS warning lamp, VDC OFF indicator lamp, and SLIP indicator lamp.
5. Conduct the appropriate inspection from the display item list, and repair or replace the malfunctioning component.
6. Start engine and drive at approximately 30 km/h (19 MPH) or more for approximately 1 minute.

   CAUTION:
   - **When a wheel sensor “short-circuit” is detected, if the vehicle is not driven at 30 km/h (19 MPH) for at least 1 minute, ABS warning lamp will not turn off even if everything is normal.**
   - **Check again to make sure that there is no malfunction on other parts.**

DISPLAY ITEM LIST

Items (CONSULT-II screen terms)	Malfunction detecting condition	Check item
FR LH SENSOR- 1 [C1104]	Circuit of front LH wheel sensor is open, or shorted or sensor power voltage is unusual.	BRC-75, "Wheel Sensor" (Note 1)
RR RH SENSOR- 1 [C1101]	Circuit of rear RH wheel sensor is open, or shorted or sensor power voltage is unusual.	
FR RH SENSOR- 1 [C1103]	Circuit of front RH wheel sensor is open, or shorted or sensor power voltage is unusual.	
RR LH SENSOR- 1 [C1102]	Circuit of rear LH wheel sensor is open, or shorted or sensor power voltage is unusual.	
FR LH SENSOR- 2 [C1108]	ABS actuator and electric unit (control unit) can not identify sensor pulses, because of large gap between wheel sensor and sensor rotor.	
RR RH SENSOR- 2 [C1105]	ABS actuator and electric unit (control unit) can not identify sensor pulses, because of large gap between wheel sensor and sensor rotor.	
FR RH SENSOR- 2 [C1107]	ABS actuator and electric unit (control unit) can not identify sensor pulses, because of large gap between wheel sensor and sensor rotor.	
RR LH SENSOR- 2 [C1106]	ABS actuator and electric unit (control unit) can not identify sensor pulses, because of large gap between wheel sensor and sensor rotor.	
STOP LAMP SW [C1116]	Stop lamp switch circuit is open or shorted.	BRC-87, "Stop Lamp Switch"
PRESS SEN CIRCUIT [C1142]	Pressure sensor signal line is open or shorted, sensor power voltage is unusual, or pressure sensor is malfunctioning.	BRC-78, "Pressure Sensor"
ST ANGLE SEN CIRCUIT [C1143]	Neutral position of steering angle sensor is dislocated, or steering angle sensor is malfunctioning.	BRC-80, "Steering Angle Sensor"

Items (CONSULT-II screen terms)	Malfunction detecting condition	Check item
YAW RATE SENSOR [C1145]	Yaw rate/side decel G sensor has generated an error, or yaw rate/side decel G sensor signal line is open or shorted.	BRC-81, "Yaw Rate/Side/Decel G Sensor"
FR LH IN ABS SOL [C1120]	Circuit of front LH IN ABS solenoid is open or shorted, or control line is open or shorted to power supply or ground.	BRC-83, "Solenoid and VDC Change-Over Valve"
FR LH OUT ABS SOL [C1121]	Circuit of front LH OUT ABS solenoid is open or shorted, or control line is open or shorted to power supply or ground.	
RR RH IN ABS SOL [C1126]	Circuit of rear RH IN ABS solenoid is open or shorted, or control line is open or shorted to power supply or ground.	
RR RH OUT ABS SOL [C1127]	Circuit of rear RH OUT ABS solenoid is open or shorted, or control line is open or shorted to power supply or ground.	
FR RH IN ABS SOL [C1122]	Circuit of front RH IN ABS solenoid is open or shorted, or control line is open or shorted to power supply or ground.	
FR RH OUT ABS SOL [C1123]	Circuit of front RH OUT ABS solenoid is open or shorted, or control line is open or shorted to power supply or ground.	
RR LH IN ABS SOL [C1124]	Circuit of rear LH IN ABS solenoid is open or shorted, or control line is open or shorted to power supply or ground.	
RR LH OUT ABS SOL [C1125]	Circuit of rear LH OUT ABS solenoid is open or shorted, or control line is open or shorted to power supply or ground.	
CV1 [C1164]	Front side VDC switch-over solenoid valve (cut valve 1) is open or shorted, or control line is open or shorted to power supply or ground.	
CV2 [C1165	Rear side VDC switch-over solenoid valve (cut valve 2) is open or shorted, or control line is open or shorted to power supply or ground.	
SV1 [C1166]	Front side VDC switch-over solenoid valve (suction valve 1) is open or shorted, or control line is open or shorted to power supply or ground.	
SV2 [C1167]	Rear side VDC switch-over solenoid valve (suction valve 2) is open or shorted, or control line is open or shorted to power supply or ground.	
PUMP MOTOR (Note 3) [C1111]	During actuator motor operation with ON, when actuator motor turns OFF or when control line for actuator motor relay is open.	BRC-84, "Actuator Motor and Motor Relay"
	During actuator motor operation with OFF, when actuator motor turns ON or when control line for relay is shorted to ground.	
ABS SENSOR [ABNORMAL SIGNAL] [C1115]	Wheel sensor input is malfunction.	BRC-75, "Wheel Sensor" (Note 1)
BATTERY VOLTAGE [ABNORMAL] [C1109]	ABS actuator and electric unit (control unit) power voltage is too low.	BRC-85, "ABS Actuator and Electric Unit (Control Unit) Power Supply and Ground Circuit"
ST ANGLE SEN SIGNAL [C1144]	Neutral position correction of steering angle sensor is not finished.	BRC-80, "Steering Angle Sensor"
ST ANG SEN COM CIR [C1156]	CAN communication line or steering angle sensor has generated an error.	
SIDE G-SEN CIRCUIT [C1146]	Yaw rate/side decel G sensor is malfunctioning, or signal line of yaw rate/side decel G sensor is open or shorted.	BRC-81, "Yaw Rate/Side/Decel G Sensor"
CONTROLLER FAILURE [C1110]	Internal malfunction of ABS actuator and electric unit (control unit)	BRC-77, "ABS Actuator and Electric Unit (Control Unit)"
CAN COMM CIRCUIT [U1000]	When a ABS actuator and electric unit (control unit) is not transmitting or receiving CAN communication signal for 2 seconds or more.	BRC-90, "CAN Communication Circuit" (Note 2)

Items (CONSULT-II screen terms)	Malfunction detecting condition	Check item
BR FLUID LEVEL LOW [C1155]	Brake fluid level drops or circuit between ABS actuator and electric unit (control unit) and brake fluid level switch is open or shorted.	BRC-88, "Brake Fluid Level Switch"
VARIANT CODING [C1170]	V coding is not functioning.	ABS actuator and electric unit (control unit) and circuit
G - SENSOR [C1113]	Decel G sensor is malfunctioning, or signal line of decel G sensor is open or shorted.	BRC-81, "Yaw Rate/ Side/Decel G Sensor"
ENGINE SIGNAL 1 [C1130]	Based on the signal from ECM, ABS actuator and electric unit (control unit) judges that engine fuel cut system is malfunctioning.	BRC-77, "Engine System Control Signal"
ENGINE SIGNAL 2 [C1131]	Based on the signal from ECM, ABS actuator and electric unit (control unit) judges that engine ETC system is malfunctioning.	
ENGINE SIGNAL 3 [C1132]	Based on the signal from ECM, ABS actuator and electric unit (control unit) judges that engine CAN system is malfunctioning.	
ENGINE SIGNAL 4 [C1133]	Based on the signal from ECM, ABS actuator and electric unit (control unit) judges that engine torque down system is malfunctioning.	
ENGINE SIGNAL 6 [C1136]	Based on the signal from ECM, ABS actuator and electric unit (control unit) judges that engine control system is malfunctioning.	
ACTUATOR RLY [C1140]	● Actuator solenoid valve relay is ON, even if control unit sends off signal. ● Actuator solenoid valve relay is OFF, even if control unit sends on signal.	BRC-84, "Actuator Motor and Motor Relay"
DECEL G SEN SET [C1160]	Neutral position correction of Decel G -sensor is not finished.	BRC-47, "Calibration of Decel G Sensor"

Note 1: After completing repairs of shorted sensor circuit, when ignition switch is turned ON, ABS warning lamp turns on. Make sure that ABS warning lamp turns off while driving vehicle at approximately 30 km/h (19 MPH) or more for approximately 1 minute according to self-diagnosis procedure. In addition, if wheel sensor 2 is displayed for wheels, check wheel sensor circuit and also check control unit power voltage.
Note 2: If multiple malfunctions are detected including CAN communication line [U1000], perform diagnosis for CAN communication line first.

ERASE MEMORY

1. Perform applicably inspection of malfunctioning item and then repair or replace.
2. Start engine and drive at 30 km/h (19 MPH) or more for approx. 1 minute.
3. Turn ignition switch “OFF” to erase memory.
4. Start engine and select “SELF-DIAG RESULTS” mode for “ABS” with CONSULT-II.
5. Touch “ERASE” on CONSULT-II screen to erase memory.

   CAUTION:
   If memory cannot be erased, perform applicably diagnosis.
6. Drive at 30 km/h (19 MPH) or more for approx. 1 minute. Be sure ABS warning lamp, VDC OFF indicator lamp, and SLIP indicator lamp stay OFF.

Data Monitor

NFS000T5

OPERATION PROCEDURE

1. Perform “CONSULT-II Start Procedure”. Refer to GI-37, "CONSULT-II Start Procedure" .
2. Touch “DATA MONITOR”.
3. Select from “SELECT MONITOR ITEM”, screen of data monitor mode is displayed.

   NOTE:
   When malfunction is detected, CONSULT-II performs REAL-TIME DIAGNOSIS.
   Also, any malfunction detected while in this mode will be displayed at real time.

DISPLAY ITEM LIST

×: Applicable –: Not applicable

Data monitor item (Unit)	SELECT MONITOR ITEM			Remarks
	ECU INPUT SIGNALS	MAIN SIGNALS	SELECTION FROM MENU	
FR RH SENSOR [km/h (MPH)]	×	×	×	Wheel speed calculated by front RH wheel sensor signal is displayed.
FR LH SENSOR [km/h (MPH)]	×	×	×	Wheel speed calculated by front LH wheel sensor signal is displayed.
RR RH SENSOR [km/h (MPH)]	×	×	×	Wheel speed calculated by rear RH wheel sensor signal is displayed.
RR LH SENSOR [km/h (MPH)]	×	×	×	Wheel speed calculated by rear LH wheel sensor signal is displayed.
BATTERY VOLT (V)	×	×	×	Voltage supplied to ABS actuator and electric unit (control unit).
SLCT LVR POSI	×	×	×	Shift position judged by CVT PNP switch signal.
ACCEL POS SIG (%)	×	–	–	Throttle valve open/close status judged by CAN communication signal is displayed.
ENGINE SPEED (rpm)	×	×	×	Engine speed judged by CAN communication signal is displayed.
STR ANGLE SIG (°)	×	–	–	Steering angle detected by steering angle sensor is displayed.
YAW RATE SEN (d/s)	×	×	–	Yaw rate detected by yaw rate side G sensor is displayed.
DECEL G SEN (G) (Only AWD models)	×	×	×	Decel acceleration detected by decel G sensor is displayed.
SIDE G-SENSOR (m/s^2)	×	–	–	Lateral acceleration detected by yaw rate/side G sensor is displayed.
PRESS SENSOR (bar)	×	–	–	Brake fluid pressure detected by pressure sensor is displayed.
STOP LAMP SW (ON/OFF)	×	×	×	Stop lamp switch (ON/OFF) status is displayed.
OFF SW (ON/OFF)	×	×	×	VDC OFF switch (ON/OFF) status is displayed.
ABS WARN LAMP (ON/OFF)	–	×	×	ABS warning lamp (ON/OFF) status is displayed.
SLIP LAMP (ON/OFF)	–	×	×	SLIP indicator lamp (ON/OFF) status is displayed.
FR LH IN SOL (ON/OFF)	–	×	×	Front LH IN ABS solenoid (ON/OFF) status is displayed.
FR LH OUT SOL (ON/OFF)	–	×	×	Front LH OUT ABS solenoid (ON/OFF) status is displayed.
RR RH IN SOL (ON/OFF)	–	×	×	Rear RH IN ABS solenoid (ON/OFF) status is displayed.

Data monitor item (Unit)	SELECT MONITOR ITEM			Remarks
	ECU INPUT SIGNALS	MAIN SIGNALS	SELECTION FROM MENU	
RR RH OUT SOL (ON/OFF)	–	×	×	Rear RH OUT ABS solenoid (ON/OFF) status is displayed.
FR RH IN SOL (ON/OFF)	–	×	×	Front RH IN ABS solenoid (ON/OFF) status is displayed.
FR RH OUT SOL (ON/OFF)	–	×	×	Front RH OUT ABS solenoid (ON/OFF) status is displayed.
RR LH IN SOL (ON/OFF)	–	×	×	Rear LH IN ABS solenoid (ON/OFF) status is displayed.
RR LH OUT SOL (ON/OFF)	–	×	×	Rear LH OUT ABS solenoid (ON/OFF) status is displayed.
OFF LAMP (ON/OFF)	–	×	×	VDC OFF Lamp (ON/OFF) status is displayed.
MOTOR RELAY (ON/OFF)	–	×	×	ABS motor relay signal (ON/OFF) status is displayed.
ACTUATOR RLY (ON/OFF)	–	×	×	ABS actuator relay signal (ON/OFF) status is displayed.
CV1 (ON/OFF)	–	–	×	Front side switch-over solenoid valve (cut valve 1) (ON/OFF) status is displayed.
CV2 (ON/OFF)	–	–	×	Rear side switch-over solenoid valve (cut-valve 2) (ON/OFF) status is displayed.
SV1 (ON/OFF)	–	–	×	Front side switch-over solenoid valve (suction valve 1) (ON/OFF) status is displayed.
SV2 (ON/OFF)	–	–	×	Rear side switch-over solenoid valve (suction valve 2) (ON/OFF) status is displayed.
VDC FAIL SIG (ON/OFF)	–	–	×	VDC fail signal (ON/OFF) status is displayed.
TCS FAIL SIG (ON/OFF)	–	–	×	TCS fail signal (ON/OFF) status is displayed.
ABS FAIL SIG (ON/OFF)	–	–	×	ABS fail signal (ON/OFF) status is displayed.
EBD FAIL SIG (ON/OFF)	–	–	×	EBD fail signal (ON/OFF) status is displayed.
FLUID LEV SW (ON/OFF)	×	–	–	Brake fluid level switch (ON/OFF) status is displayed.
EBD SIGNAL (ON/OFF)	–	–	×	EBD operation (ON/OFF) status is displayed.
ABS SIGNAL (ON/OFF)	–	–	×	ABS operation (ON/OFF) status is displayed.
TCS SIGNAL (ON/OFF)	–	–	×	TCS operation (ON/OFF) status is displayed.
VDC SIGNAL (ON/OFF)	–	–	×	VDC operation (ON/OFF) status is displayed.
EBD WARN LAMP (ON/OFF)	–	–	×	Brake warning lamp (ON/OFF) status is displayed. (Note)
CRANKING SIG (ON/OFF)	–	–	×	Cranking condition (ON/OFF) status is displayed.

Data monitor item (Unit)	SELECT MONITOR ITEM			Remarks
	ECU INPUT SIGNALS	MAIN SIGNALS	SELECTION FROM MENU	
4WD FAIL REQ (ON/OFF)	–	–	×	AWD fail-safe signal (ON/OFF) status is displayed.
2WD/4WD (2WD/4WD)	–	–	×	Distinguish 2WD and AWD

Note: Serves as EBD warning lamp.

Active Test

NFS000T6

OPERATION PROCEDURE

CAUTION:

- **Do not perform active test while driving vehicle.**
- **Make sure to completely bleed air from the brake system.**
- **Active test can not be performed when ABS warning lamp is on.**
- **ABS and brake warning lamps turn on during the active test.**

1. Perform “CONSULT-II Stat Procedure”. Refer to GI-37, "CONSULT-II Start Procedure" .
2. Touch “ACTIVE TEST”.
3. Touch “SELECT TEST ITEM” is displayed.
4. Touch necessary test item.
5. With “SELECT TEST SIGNALS” display shown in reverse, touch “START”.
6. “ACTIVE TEST” screen will be displayed, so conduct following test.

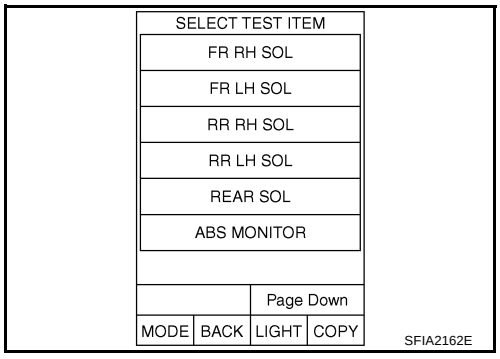

NOTE:

- When active test is performed while depressing pedal, pedal depression amount will change, but this is normal.
- Approximately 10 seconds after operation is begun, “TEST STOP” will be displayed.
- To perform retest after “TEST STOP” is displayed, touch “BACK” and conduct the test from the Step 3.

TEST ITEM

Solenoid valve

NOTE:

The example shown is for front right wheel. The procedure for the other wheels is the same as given below.

- When performing an active test of the ABS function, select the “MAIN SIGNALS” for each test item. In addition, when performing an active test of the VDC/TCS function, select the item menu for each test item.
- For ABS solenoid valve, touch “UP”, “KEEP”, and “DOWN”. Then use screen monitor to check that solenoid valve operates as shown in Solenoid Valve Operation Chart. Refer to “Solenoid Valve Operation Chart”.

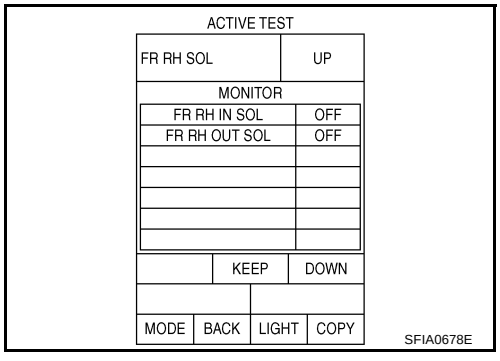

Operation	ABS solenoid valve			ABS solenoid valve (ACT)		
	UP	KEEP	DOWN	UP	ACTUATOR UP	ACTUATOR KEEP
FR RH IN SOL	OFF	ON	ON	OFF	OFF	OFF
FR RH OUT SOL	OFF	OFF	ON*	OFF	OFF	OFF
Primary side VDC switch over valve 1 (SV 1)	OFF	OFF	OFF	OFF	ON*	OFF
Primary side VDC switch over valve 1 (CV 1)	OFF	OFF	OFF	OFF	ON	ON

*: ON for 1 to 2 seconds after the touch, and then OFF

ABS Motor

Touch “ON” and “OFF” on the screen. Make suer ABS motor relay operates as shown in table below.

Operation	ON	OFF
MOTOR RELAY	ON	OFF
ACTUATOR RLY	ON	ON

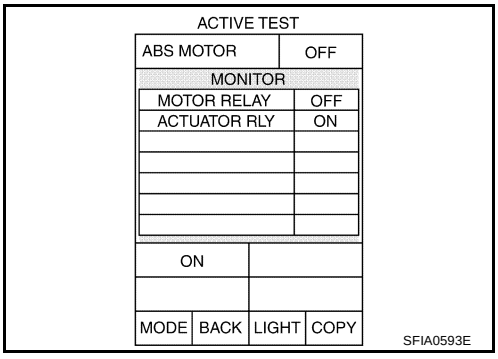

ABS Actuator and Electric Unit (Control Unit) Part Number

NFS000T7

Ignore the ABS actuator and electric unit (control unit) part number displayed in the “ECU PART NUMBER”. Refer to parts catalog to order the ABS actuator and electric unit (control unit).

Trouble Diagnosis Chart for Symptoms

NFS000LF

If ABS warning lamp, VDC OFF indicator lamp and SLIP indicator lamp turn ON, perform self-diagnosis. Refer to BRC-65, "DESCRIPTION" .

Symptom	Check item	Reference Page
Excessive ABS Function Operation Frequency	Brake force distribution	BRC-92
	Looseness of front and rear axle	
	Wheel sensor and rotor system	
Unexpected pedal reaction	Brake pedal stroke	BRC-92
	Make sure the braking force is sufficient when the ABS is not operating.	
The braking distance is long	Check stopping distance when the ABS is not operating.	BRC-93
ABS function does not operate	Wheel sensor	BRC-93
	The ABS does not operate when the speed is 10 km/h (6MPH) or less.	
Pedal vibration or ABS operation sound occurs	Wheel sensor	BRC-93
	When brake pedal is lightly depressed (just place a foot on it), ABS is activated and vibration is felt. However this is normal,	
Vehicle jerks during VDC/TCS/ABS control	VDC/TCS/ABS control unit	BRC-94
	Unified ECM	
	Unified TCM	
ABS warning lamp indication is not normal	CAN communication line	BRC-95
	VDC/TCS/ABS control unit	
	Combination meter	

Symptom	Check item	Reference Page
Slip indicator lamp is not normal	CAN communication line	BRC-95
	VDC/TCS/ABS control unit	
	Combination meter	
VDC OFF indicator lamp is not normal	CAN communication line	BRC-96
	VDC/TCS/ABS control unit	
	Combination meter	

For Fast and Accurate Diagnosis

NFS000GJ

PRECAUTIONS FOR DIAGNOSIS

- Before performing diagnosis, always read precautions. Refer to GI-4, "General Precautions" .
- If ABS actuator and electric unit (control unit), steering angle sensor, steering system parts, suspension system parts, or tires have been replaced, or if alignment has been adjusted, be sure to adjust neutral position of steering angle sensor before driving. Refer to BRC-46, "Adjustment of Steering Angle Sensor Neutral Position" .
- After diagnosis is finished, be sure to erase memory. Refer to BRC-67, "ERASE MEMORY" .
- When checking continuity and voltage between units, be sure to check for disconnection, looseness, bend, or collapse of connector terminals. If any malfunction is found, repair or replace connector terminals.
- For intermittent symptoms, possible cause is malfunction in harness, harness connector, or terminals. Move harness, harness connector, and terminals to check for poor connections.
- If a circuit tester is used for the check, be careful not to forcibly extend any connector terminal.
- To use CONSULT-II to perform self-diagnosis of ABS actuator and electric unit (control unit), active tests, or work support, first stop work, then connect CONSULT-II and select “ABS”.
- While self-diagnosis results of CONSULT-II shows malfunction, if CONSULT-II active test is performed, an engine system error may be indicated. In this case, start engine to resume the normal screen.
- VDC/TCS/ABS system electronically controls brake operation and engine output. The following symptoms may be caused by normal operations:
- When CONSULT-II is used, ABS warning lamp, VDC OFF indicator lamp, SLIP indicator lamp may be ON/OFF.

Symptom	Symptom description	Result
Motor operation noise	This is noise of motor inside ABS actuator and electric unit (control unit). Slight noise may occur during VDC, TCS, and ABS operation.	Normal
	When the vehicle speed goes over 20 km/h (12.5 MPH), the motor and valves operating noise may be heard. It happens only once after ignition switch is ON. This is a normal status of the system operation check.	
System operation check noise	When engine starts, slight “click” noise may be heard from engine compartment. This is normal and is part of system operation check.	Normal
VDC/TCS operation (SLIP lamp Blinking)	TCS may activate momentarily if wheel speed changes when driving over location where friction coefficient varies, when downshifting, or when fully depressing accelerator pedal.	Normal Cancel the VDC/TCS function for the inspection on a chassis dynamometer.
	For inspection of speedometer or other instruments, press VDC OFF Switch to turn VDC/TCS function off.	
	When accelerator pedal is depressed on a chassis dynamometer (fixed front-wheel type), vehicle speed will not increase. This is not normal. It is result of TCS being activated by stationary front wheels. Warning lamp may also illuminate to indicate “sensor system error”. This is also normal, and is the result of the stationary front wheels being detected. To be certain, restart engine, and drive vehicle at 30 km/h (19 MPH) or above. Make sure that warning lamp does not illuminate.	

Symptom	Symptom description	Result
ABS operation (Longer stopping distance)	On roads with low friction coefficients, such as snowy roads or gravel roads, vehicles with ABS may require a longer stopping distance. Therefore, when driving on such roads, avoid overconfidence and keep speed sufficiently low.	Normal
Insufficient feeling of acceleration	Depending on road conditions, driver may feel that feeling of acceleration is insufficient. This is because traction control, which controls engine and brakes to achieve optimal traction, has the highest priority (for safety). As a result, there may be times when acceleration is slightly less than usual for the same accelerator pedal operation.	Normal

Basic Inspection

NFS000GK

BRAKE FLUID LEVEL, LEAKS, AND BRAKE PADS

1. Check fluid level in the brake reservoir tank. If fluid level is low, refill the brake fluid.
2. Check the brake piping and around the ABS actuator and electric unit (control unit) for leaks. If leakage or seepage is found, check the following items.
   - If ABS actuator and electric unit (control unit) connection is loose, tighten the piping to the specified torque and make sure there are no leaks.
   - If there is damage to the connection flare nut or ABS actuator and electric unit (control unit) screw, replace the damaged part and re-conduct the leak inspection to make sure there are no leaks.
   - If there is leakage or seepage at any location other than ABS actuator and electric unit (control unit) connection, wipe away leakage or seepage with clean cloth. Then inspect again and confirm the there is on leakage.
   - If there is leakage from ABS actuator and electric unit (control unit), wipe away leakage or seepage with clean cloth. Then inspect again. If there is leakage or seepage, replace ABS actuator and electric unit (control unit).

     CAUTION:
     ABS actuator and electric unit (control unit) body can not be disassembled.
3. Check brake disc and pads. Refer to BR-28, "Removal and Installation of Brake Pad" in “Front Disc Brake” and BR-34, "Removal and Installation of Brake Pad" in “Rear Disc Brake”.

POWER SYSTEM TERMINAL LOOSENESS AND BATTERY

Make sure the battery positive cable, negative cable and ground connection are not loose. If looseness is detected, tighten the piping to the specified torquer. In addition, check the battery voltage to make sure it has not dropped and the altimeter is normal.

ABS WARNING LAMP, VDC OFF INDICATOR LAMP, BRAKE WARNING LAMP AND SLIP INDICATOR LAMP

×: ON –: OFF

Condition	ABS warning lamp	VDC OFF indicator lamp	SLIP indicator lamp	Brake warning lamp [Note 1]	Remarks
Ignition switch OFF.	—	—	—	—	—
Approx. 2 seconds after ignition switch is turned ON.	×	×	×	× [Note 2]	—
Approx. 2 seconds later after ignition switch ON.	—	—	—	× [Note 2]	Go out 2 seconds after ignition switch is turned ON.
VDC OFF switch is turned ON. (VDC/TCS function is OFF.)	—	×	—	—	—
VDC/TCS/ABS error.	×	×	×	—	There is an ABS actuator and electric unit (control unit) error. (Power, ground or system malfunction)
When VDC/TCS is not functioning normally.	—	×	×	—	—
EBD error.	×	×	×	×	—

Note 1: Brake warning lamp will turn on in case of operating parking brake (switch turned on) or of actuating brake fluid level switch (brake fluid is insufficient).

Note 2: After starting engine, turn OFF.

Check the following items when unsuitable for an above condition.

- ABS warning lamp: BRC-90, "CAN Communication Circuit" .
- Brake warning lamp: BRC-90, "CAN Communication Circuit" , BRC-88, "Brake Fluid Level Switch" .
- VDC OFF indicator lamp: BRC-90, "CAN Communication Circuit" , BRC-89, "VDC OFF Switch" .
- SLIP indicator lamp:BRC-90, "CAN Communication Circuit" .

If malfunction is not found, refer to DI-4, "COMBINATION METERS" .

TROUBLE DIAGNOSIS FOR SYSTEM

PFP:00000

Wheel Sensor

NFS000GL

After using the CONSULT-II SELF-DIAG RESULTS to determine positions of malfunctioning wheel sensor, check all areas to determine the component to be replaced.

CAUTION:

- **Do not measure the resistance value and also voltage between sensor terminal with tester etc., because a sensor is an active sensor.**
- **Do not expand terminal of connector with a tester terminal stick, when it does the inspection with the tester.**

INSPECTION PROCEDURE

1. CHECK SELF-DIAGNOSTIC RESULTS

Check self-diagnostic results.

Self-diagnosis results
FR RH SENSOR-1,-2
FR LH SENSOR- 1,-2
RR RH SENSOR-1,-2
RR LH SENSOR-1,- 2
ABS SENSOR [ABNORMAL SIGNAL]

Is above displayed in the self-diagnosis display?

YES >> GO TO 2.
NO >> INSPECTION END

2. CHECK TIRE

Check air pressure, wear, and size.

Are air pressure, wear, and size within the standard values?

YES >> GO TO 3.
NO >> Adjust air pressure, or replace tire.

3. CHECK SENSOR AND SENSOR ROTOR

- Check condition of sensor mount (for looseness, etc.).
- Check surface of front sensor rotor rubber for damage.
- Check rear sensor rotor for damage.

OK or NG

OK >> GO TO 4.
NG >> Repair sensor mount or replace sensor rotor. Refer to BRC-98, "SENSOR ROTOR" .

4. CHECK CONNECTOR

1. Turn ignition switch “OFF”.
2. Disconnect ABS actuator and electric unit (control unit) connector E24 and the malfunctioning wheel sensor connector E20 (FR - LH) or E27 (FR - RH) or B202 (RR - LH), B203 (RR - RH). Check terminal to see if it is deformed, disconnected, loose, etc., and repair or replace it if any malfunction condition is found.
3. Reconnect connectors and check that interference with other parts has not cut wheel sensor cables, drive at a speed of 30 km/h (19 MPH) or above for at least 1minute, and conduct self-diagnosis.

OK or NG

OK >> GO TO 5.
NG >> Connector terminal contact is loose, damaged, open or shorted.

5. CHECK WHEEL SENSOR HARNESS

1. Turn ignition switch “OFF”.
2. Disconnect the wheel sensor connector E20 (FR - LH), E27 (FR - RH), B202 (RR - LH), B203 (RR - RH) and ABS actuator and electric unit (control unit) connector E24.
3. Check continuity between terminals. (Also check continuity when steering wheel is turned right and left and when sensor harness inside the wheel house is moved.)

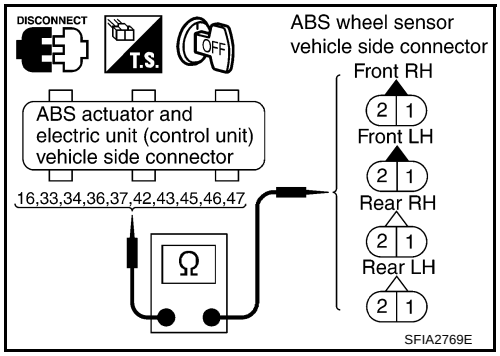

	Power supply circuit		Signal circuit		Ground circuit	
Wheel	ABS actuator and electric unit (control unit)	Wheel sensor	ABS actuator and electric unit (control unit)	Wheel sensor	ABS actuator and electric unit (control unit) (Signal)	ABS actuator and electric unit (control unit) (Ground)
Front RH	34	1	33	2	33, 34	16, 47
Front LH	45	1	46	2	45, 46	
Rear RH	43	1	42	2	43, 42	
Rear LH	36	1	37	2	36, 37	

Power supply circuit : Continuity should exist.
Signal circuit : Continuity should exits.
Ground circuit : Continuity should not exist.

OK or NG

OK >> GO TO 6.
NG >> Repair or replace harness and connector between ABS actuator and electric unit (control unit) and wheel sensor.

6. CHECK WHEEL SENSOR POWER SUPPLY CIRCUIT

1. Disconnect malfunctioning wheel sensor connector.
2. Turn ignition switch ON and check voltage between wheel sensor harness connector power supply terminal and ground.

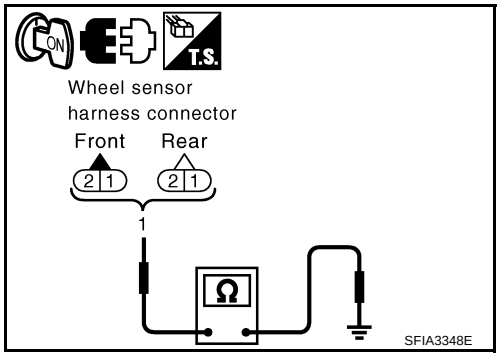

Wheel	Wheel sensor	Ground	Voltage
Front RH	1	—	8 V or more
Front LH			
Rear RH			
Rear LH			

OK or NG?

OK >> Replace wheel sensor.
NG >> Replace ABS actuator and electric unit (control unit).

Engine System Control Signal

NFS000GM

INSPECTION PROCEDURE

1. CHECK SELF-DIAGNOSTIC RESULTS

Check self-diagnostic results.

Self-diagnostic results
ENGINE SIGNAL 1
ENGINE SIGNAL 2
ENGINE SIGNAL 3
ENGINE SIGNAL 4
ENGINE SIGNAL 6

Is above displayed in the self-diagnosis display?

YES >> GO TO 2.
NO >> INSPECTION END

2. CHECK ENGINE SYSTEM

1. Perform an ECM self-diagnosis and repair or replace any malfunction items. Perform the ECM self-diagnosis again.
2. Perform ABS actuator and electric unit (control unit) self-diagnosis again.

OK or NG

OK >> INSPECTION END
NG >>
- Repair or replace malfunctioning components.
- Perform the self-diagnosis, and make sure that the result shows “NO DTC IS DETECTED”.

ABS Actuator and Electric Unit (Control Unit)

NFS000GN

INSPECTION PROCEDURE

1. CHECK SELF-DIAGNOSTIC RESULTS

Check self-diagnostic results.

Self-diagnostic results
CONTROLLER FAILURE

Is above displayed in the self-diagnosis display?

YES >>
- Replace ABS actuator and electric unit (control unit).
- Perform the self-diagnosis, and make sure that the result shows “NO DTC IS DETECTED”.

NO >> INSPECTION END

Pressure Sensor

NFS000GO

INSPECTION PROCEDURE

1. CHECK SELF-DIAGNOSTIC RESULTS

Check self-diagnostic results.

Self-diagnostic results
PRESS SEN CIRCUIT

Is above displayed in the self-diagnosis display?

YES >> GO TO 2.
NO >> INSPECTION END

2. CHECK STOP LAMP SWITCH CONNECTOR

1. Turn ignition switch “OFF”.
2. Disconnect the stop lamp switch connector E116 and ABS actuator and electric unit (control unit) connector E24 and check terminals for deformation, disconnection, looseness, and so on. If any malfunction is found, repair or replace terminal.
3. Reconnect connectors securely.
4. Start engine.
5. Repeat pumping brake pedal carefully several times, then perform the self-diagnosis.

Do any self-diagnosis items appear?

OK >> GO TO 3.
NG >> Poor connection. Repair or replace applicable connector.

3. CHECK STOP LAMP SWITCH

1. Turn ignition switch OFF and disconnect stop lamp switch harness connector.
2. Operate stop lamp switch and check continuity between stop lamp switch harness connector terminals.

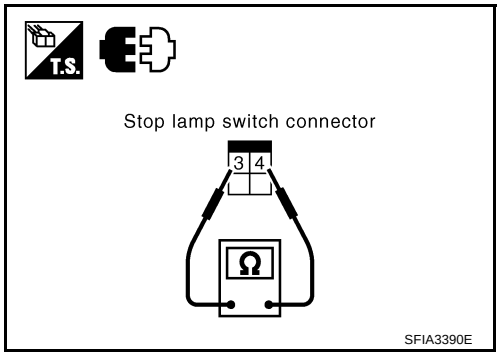

Terminal	Condition	Continuity
3 – 4	Release stop lamp switch (When brake pedal depressed.)	Yes
	Push stop lamp switch (When brake pedal released.)	No

OK or NG

OK >> GO TO 4.
NG >> Replace stop lamp switch. Refer to BR-8, "Components" .

4. CHECK STOP LAMP SWITCH CIRCUIT

1. Turn ignition switch “OFF”.
2. Disconnect stop lamp switch connector E116 and ABS actuator and electric unit (control unit) connector E24.
3. Check continuity between stop lamp switch harness connector E116 and ABS actuator and electric unit (control unit) harness connector E24.

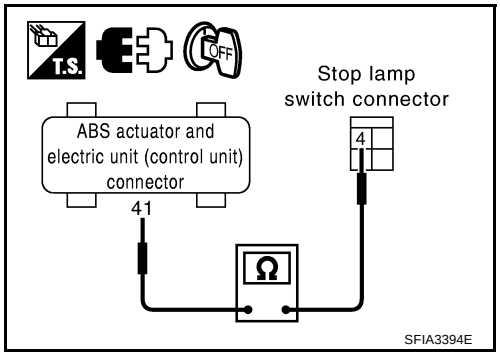

41 - 4 : Continuity should exist.

OK or NG

OK >> GO TO 5.
NG >> Open or short in harness. Repair or replace harness.

5. CHECK PRESSURE SENSOR CONNECTOR

1. Turn ignition switch “OFF”.
2. Disconnect pressure sensor connector E23 and ABS actuator and electric unit (control unit) connector E24, check terminals for deformation, disconnection, looseness, and so on. If there is an error, repair or replace terminal.
3. Reconnect connectors and perform the self-diagnosis. Refer to BRC-65, "DESCRIPTION" .

OK or NG

OK >> INSPECTION END.
NG >> GO TO 6.

6. CHECK PRESSURE SENSOR CIRCUIT

1. Turn ignition switch “OFF”.
2. Disconnect pressure sensor connector E23 and ABS actuator and electric unit (control unit) connector E24.
3. Check continuity between ABS actuator and electric unit (control unit) connector and pressure sensor connector.

19 - 1 : Continuity should exist.
20 - 2 : Continuity should exist.
18 - 3 : Continuity should exist.

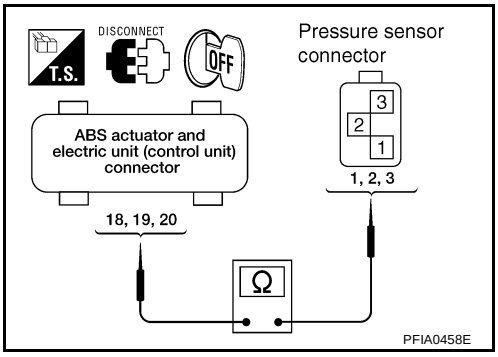

OK or NG

OK >> GO TO 7.
NG >> If the open or short in harness, repair or replace harness.

7. CHECK PRESSURE SENSOR

1. Connect pressure sensor connector E23 and ABS actuator and electric unit (control unit) connectors E24.
2. Perform “DATA MONITOR” of the “PRESS SENSOR” to check if the status is normal.

Condition	Data monitor display
When brake pedal is depressed.	– 0 to 170 bar
When brake pedal is released	Approx. 0 bar

OK or NG

OK >> Perform ABS actuator and electric unit (control unit) self-diagnosis again.
NG >> Pressure sensor malfunction. Replace pressure sensor.

Steering Angle Sensor
NFS000GP

INSPECTION PROCEDURE

1. CHECK CAN COMMUNICATION CIRCUIT

Check self-diagnostic results.

Self-diagnosis results
ST ANGLE SEN COM CIR

Is the “ST ANGLE SEN COM CIR” display?

YES >> GO TO LAN-49, "CAN System Specification Chart" .
NO >> GO TO 2.

2. CHECK SELF-DIAGNOSIS RESULTS

Check self-diagnostic results.

Self-diagnosis results
ST ANGLE SEN CIRCUIT

Is the “ST ANGLE SEN CIRCUIT” display?

YES >> GO TO 3.
NO >> INSPECTION END

3. CHECK CONNECTOR

1. Turn ignition switch “OFF”.
2. Disconnect steering angle sensor connector M33 and ABS actuator and electric unit (control unit) connector E24 and check terminals for deformation, disconnection, looseness, and so on. If there is an error, repair or replace terminal.
3. Reconnect connectors and perform an ABS actuator and electric unit (control unit) self-diagnosis again.

OK or NG

OK >> INSPECTION END.
NG >> GO TO 4.

4. CHECK STEERING ANGLE SENSOR CIRCUIT

1. Turn ignition switch “OFF”.
2. Disconnect steering angle sensor connector M33 and ABS actuator and electric unit (control unit) connector E24.
3. Check continuity between ABS actuator and electric unit (control unit) harness connector and steering angle sensor harness connector.

11 - 4 : Continuity should exist.
15 - 5 : Continuity should exist.

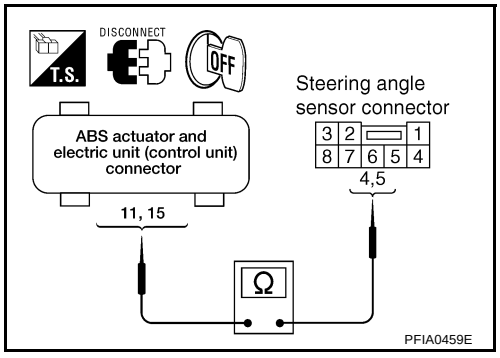

OK or NG

OK >> GO TO 5.
NG >> If the open or short in harness, repair or replace harness.

5. CHECK STEERING WHEEL PLAY

Check steering wheel play. Refer to PS-38, "SERVICE DATA AND SPECIFICATIONS (SDS)" .

OK or NG

OK >> GO TO 6
NG >> Adjust steering wheel play.

6. CHECK DATA MONITOR

Check data monitor display.

Steering condition	Data monitor
Straight-ahead	–3.5° to +3.5°
Turn wheel to the right by 90°	Approx. - 90°
Turn wheel to the left by 90°	Approx.+ 90°

OK or NG

OK >> Perform ABS actuator and electric unit (control unit) self-diagnosis again.
NG >> Replace spiral cable (steering angle sensor) and adjust neutral position of steering angle sensor. Refer to BRC-46, "Adjustment of Steering Angle Sensor Neutral Position" .

Yaw Rate/Side/Decel G Sensor

NFS000GQ

CAUTION:
Sudden turns (such as spin turns, acceleration turns), drifting, etc. may cause yaw rate/side/decel G sensor circuit indicate a malfunction. However this is not a malfunction if normal operation can be resumed after restarting engine.

INSPECTION PROCEDURE

1. CHECK SELF-DIAGNOSTIC RESULTS

Check self-diagnostic results.

Self-diagnostic results
YAW RATE SENSOR
SIDE G-SEN CIRCUIT
G-SENSOR

CAUTION:
When on a turntable, such as at a parking structure entrance, or when on a moving object with engine running, the VDC OFF indicator lamp might turn on and self-diagnosis using the CONSULT-II yaw rate sensor system malfunction might be displayed, but in this case there is no malfunction with yaw rate/side/decel G sensor circuit. As soon as the vehicle leaves the turntable or moving object, restart engine to return the system to normal. And after doing spin turns or acceleration turns with VDC "OFF" (VDC OFF switch "ON"), too, the results will return to a normal state by restarting vehicle.

Is above displayed in the self-diagnosis display?

YES >> GO TO 2.
NO >> INSPECTION END

2. CHECK CONNECTOR

1. Turn ignition switch "OFF".
2. Disconnect yaw rate/side/decel G sensor connector M61 and ABS actuator and electric unit (control unit) connector E24 and check terminals for deformation, disconnection, looseness, and so on. If there is an error, repair or replace terminal.
3. Reconnect connectors and then perform the self-diagnosis.

OK or NG

OK >> INSPECTION END.
NG >> GO TO 3.

3. CHECK YAW RATE/SIDE DECEL G SENSOR HARNESS

1. Turn ignition switch “OFF”.
2. Disconnect yaw rate/side/decel G sensor connector M61 and ABS actuator and electric unit (control unit) connector E24.
3. Check continuity between ABS actuator and electric unit (control unit) harness connector and yaw rate/side/decel G sensor harness connector.

6 - 3 : Continuity should exist.
25 - 1 : Continuity should exist.
29 - 2 : Continuity should exist.
24 - 5 : Continuity should exist.

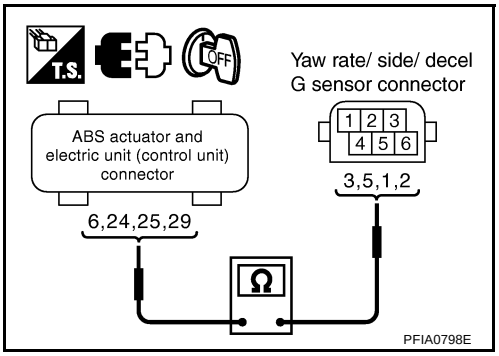

OK or NG

OK >> GO TO 4.
NG >> If open or short in harness, repair or replace harness.

4. CHECK YAW RATE/SIDE DECEL G SENSOR

Check data monitor display.

Vehicle status	Yaw rate sensor (Data monitor standard)	Side G sensor (Data monitor standard)	Decel G sensor (Data monitor standard)
When stopped	–4 to +4°/s	–1.1 to +1.1 m/s^2	–0.11 to +0.11 G
Right turn	Negative value	Negative value	–
Left turn	Positive value	Positive value	–
Speed up	–	–	Negative value
Speed down	–	–	Positive value

OK or NG

OK >> Perform ABS actuator and electric unit (control unit) self diagnosis again.
NG >> Replace the malfunctioning yaw rate sensor/side/decel G sensor, and then perform ABS actuator and electric unit (control unit) self-diagnosis again.

Solenoid and VDC Change-Over Valve

NFS000GR

INSPECTION PROCEDURE

1. CHECK SELF-DIAGNOSTIC RESULTS

Check self-diagnostic results.

Self-diagnostic results
FR LH IN SOL
FR LH OUT SOL
RR RH IN SOL
RR RH OUT SOL
FR RH IN SOL
FR RH OUT SOL
RR LH IN SOL
RR LH OUT SOL
CV 1
CV 2
SV 1
SV 2

Is above displayed in the self-diagnosis display?

YES >> GO TO 2.
NO >> INSPECTION END

2. CHECK CONNECTOR

1. Turn ignition switch “OFF”.
2. Disconnect ABS actuator and electric unit (control unit) connector E24 check terminals for deformation, disconnection, looseness, and so on. If there is an error, repair or replace terminal.
3. Reconnect connectors and then perform the self-diagnosis.

OK or NG

OK >> INSPECTION END.
NG >> GO TO 3.

3. CHECK SOLENOID POWER AND GROUND CIRCUIT

1. Turn ignition switch “OFF”.
2. Disconnect ABS actuator and electric unit (control unit) connector E24.
3. Check voltage between ABS actuator and electric unit (control unit) harness connector E24 and ground.

32 - Ground : Battery voltage

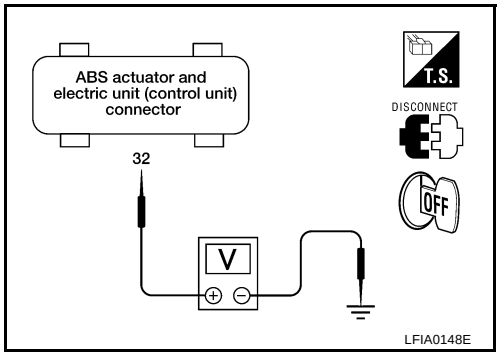

4. Check continuity between ABS actuator and electric unit (control unit) harness connector E24 and ground.

16 - Ground : Continuity should exist.
47 - Ground : Continuity should exist.

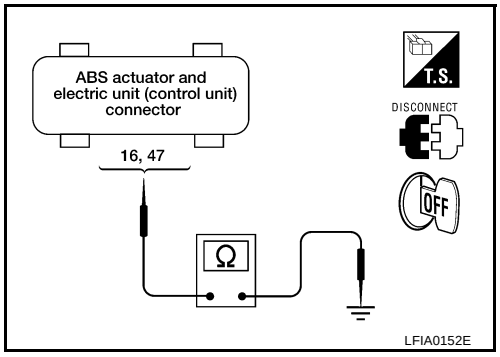

OK or NG

OK >> Perform self-diagnosis again. If the same results appear, replace ABS actuator and electric unit (control unit). Refer to BRC-99, "ACTUATOR AND ELECTRIC UNIT (ASSEMBLY)" .

NG >> Repair harness or connectors.

Actuator Motor and Motor Relay

NFS000GS

INSPECTION PROCEDURE

1. CHECK SELF-DIAGNOSTIC RESULTS (1)

Check self-diagnostic results.

Self-diagnostic results
PUMP MOTOR
ACTUATOR RLY

Is above displayed in the self-diagnosis display?

YES >> GO TO 2.
NO >> INSPECTION END.

2. CHECK CONNECTOR

1. Turn ignition switch “OFF”.
2. Disconnect ABS actuator and electric unit (control unit) connector E24 check terminals for deformation, disconnection, looseness, and so on. If there is an error, repair or replace terminal.
3. Reconnect connectors and then perform the self-diagnosis.

OK or NG

OK >> INSPECTION END.
NG >> GO TO 3.

3. CHECK ABS MOTOR AND MOTOR RELAY POWER SUPPLY CIRCUIT

1. Turn ignition switch “OFF”.
2. Disconnect ABS actuator and electric unit (control unit) connector E24.
3. Check voltage between ABS actuator and electric unit (control unit) harness connector E24 and ground.

1 - Ground : Battery voltage

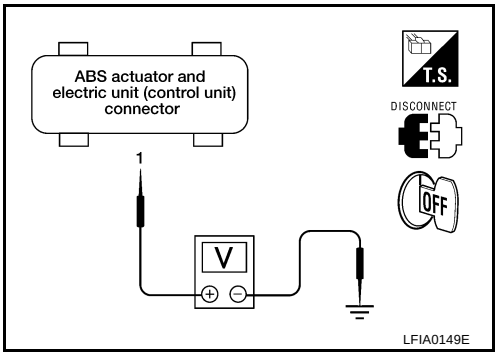

4. Check continuity between ABS actuator and electric unit (control unit) harness connector E24 and ground.

16 - Ground : Continuity should exist.

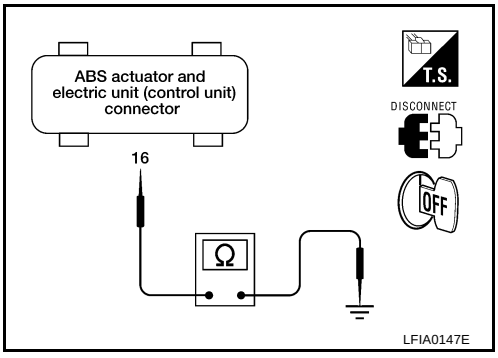

OK or NG

OK >> Perform self-diagnosis again. If the same result appears, replace ABS actuator and electric unit (control unit). Refer to BRC-99, "ACTUATOR AND ELECTRIC UNIT (ASSEMBLY)" .

NG >> Repair harness or connectors.

ABS Actuator and Electric Unit (Control Unit) Power Supply and Ground Circuit

NFS000GT

INSPECTION PROCEDURE

1. CHECK SELF-DIAGNOSTIC RESULTS

Check the self-diagnostic results.

Self-diagnostic results
BATTERY VOLTAGE [ABNORMAL]

Does “BATTERY VOLTAGE” appear in self-diagnosis results display?

YES >> GO TO 2.

NO >> INSPECTION END.

2. CHECK CONNECTOR

1. Turn ignition switch “OFF”.
2. Disconnect ABS actuator and electric unit (control unit) connector E24 check terminals for deformation, disconnection, looseness, and so on. If there is an error, repair or replace terminal.
3. Reconnect connectors and then perform the self-diagnosis.

OK or NG

OK >> INSPECTION END.

NG >> GO TO 3.

3. CHECK ABS ACTUATOR AND ELECTRIC UNIT (CONTROL UNIT) POWER SUPPLY

1. Turn ignition switch “OFF”.
2. Disconnect ABS actuator and electric unit (control unit) connector E24.
3. Turn ignition switch ON (but do not start engine). Check voltage between ABS actuator and electric unit (control unit) harness connector E24 and ground.

4 - Ground : Battery voltage

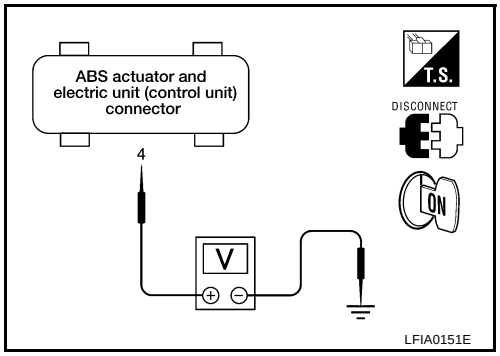

OK or NG

OK >> GO TO 4.
NG >> GO TO 5

4. CHECK ABS ACTUATOR AND ELECTRIC UNIT (CONTROL UNIT) GROUND CIRCUITS

1. Turn ignition switch “OFF”.
2. Disconnect ABS actuator and electric unit (control unit) connector E24.
3. Check continuity between ABS actuator and electric unit (control unit) harness connector E24 and ground.

16 - Ground : Continuity should exist.
47 - Ground : Continuity should exist.

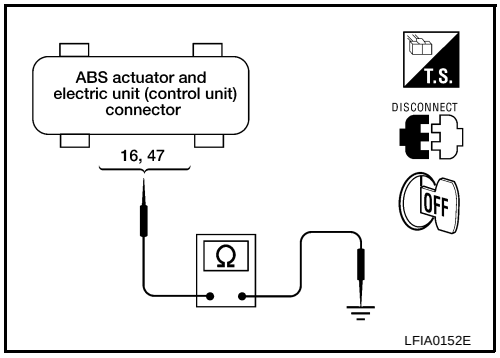

OK or NG

OK >> Perform ABS actuator and electric unit (control unit) self-diagnosis again.
NG >> Repair harness or connectors.

5. CHECK ABS ACTUATOR AND ELECTRIC UNIT (CONTROL UNIT) POWER SUPPLY CIRCUIT

1. Check fuse.
2. Check continuity between battery positive terminal and ABS actuator and electric unit (control unit) harness connector E24.

ABS actuator and electric unit (control unit)	Battery positive terminal	Continuity
1, 32	—	Yes

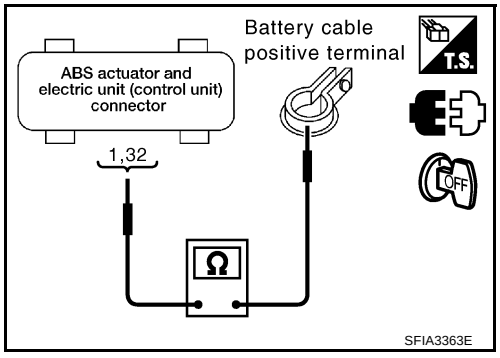

OK or NG

YES >> Check for malfunction conditions in battery (terminal looseness, low voltage, etc.) and alternator.
NO >> Repair harness or connectors.

Stop Lamp Switch

NFS000GU

INSPECTION PROCEDURE

1. CHECK SELF-DIAGNOSTIC RESULTS

Check the self-diagnostic results.

Self-diagnostic results
STOP LAMP SW

Is above displayed in the self-diagnosis display?

YES >> GO TO 2.
NO >> INSPECTION END

2. CHECK CONNECTOR

1. Turn ignition switch “OFF”.
2. Disconnect the stop lamp switch connector E116 and ABS actuator and electric unit (control unit) connector E24 and check terminals for deformation, disconnection, looseness, and so on. If any malfunction is found, repair or replace terminal.
3. Reconnect connectors securely.
4. Start engine.
5. Repeat pumping brake pedal carefully several times, then perform the self-diagnosis.

Do any self-diagnosis items appear?

OK >> GO TO 3.
NG >> Poor connection. Repair or replace applicable connector.

3. CHECK STOP LAMP SWITCH

1. Turn ignition switch OFF and disconnect stop lamp switch harness connector.
2. Operate stop lamp switch and check continuity between stop lamp switch harness connector terminals.

Terminal	Condition	Continuity
3 – 4	Release stop lamp switch (When brake pedal depressed.)	Yes
	Push stop lamp switch (When brake pedal released.)	No

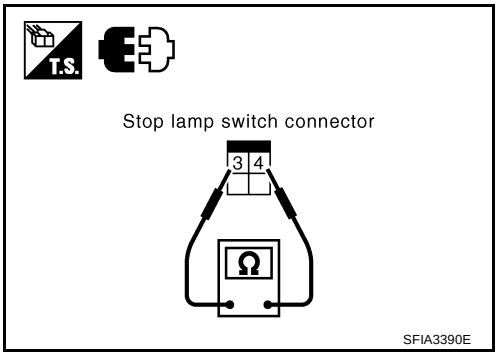

OK or NG

OK >> GO TO 4.
NG >> Replace stop lamp switch. Refer to BR-8, "Components" .

4. CHECK STOP LAMP SWITCH CIRCUIT

1. Turn ignition switch “OFF”.
2. Disconnect stop lamp switch connector E116 and ABS actuator and electric unit (control unit) connector E24.
3. Check continuity between stop lamp switch harness connector E116 and ABS actuator and electric unit (control unit) harness connector E24.

41 - 4 : Continuity should exist.

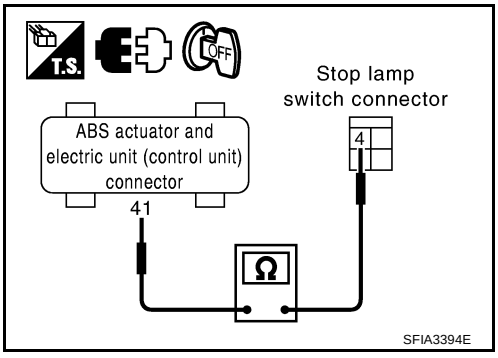

OK or NG

OK >> Connect connectors and perform an ABS actuator and electric unit (control unit) self-diagnosis.
NG >> Open or short in harness. Repair or replace harness.

Brake Fluid Level Switch

NFS000GV

INSPECTION PROCEDURE

CAUTION:

Check the brake reservoir tank fluid level. If the level is low, add brake fluid.

1. CHECK SELF-DIAGNOSTIC RESULTS

Check the self-diagnostic results.

Self-diagnostic results
BR FLUID LEVEL LOW

Is above displayed in the self-diagnosis display?

YES >> GO TO 2.
NO >> INSPECTION END

2. CHECK CONNECTOR

1. Turn ignition switch “OFF”.
2. Disconnect the brake fluid level switch connector E21 and ABS actuator and electric unit (control unit) connector E24 and check terminal for deformation, disconnection, looseness, and so on. If there is any malfunction condition, repair or replace terminal.
3. Reconnect connectors and then perform the self-diagnosis.

OK or NG

OK >> Connector terminal contact is loose, damaged, open or shorted.
NG >> GO TO 3.

3. CHECK HARNESS BETWEEN THE BRAKE FLUID LEVEL SWITCH AND ABS ACTUATOR AND ELECTRIC UNIT (CONTROL UNIT)

1. Turn ignition switch “OFF”.
2. Disconnect the brake fluid level switch connector E21, ABS actuator and electric unit (control unit) connectors E24.
3. Check continuity between the brake fluid level switch harness connector E21 and ABS actuator and electric unit (control unit) harness connector E24 and ground.

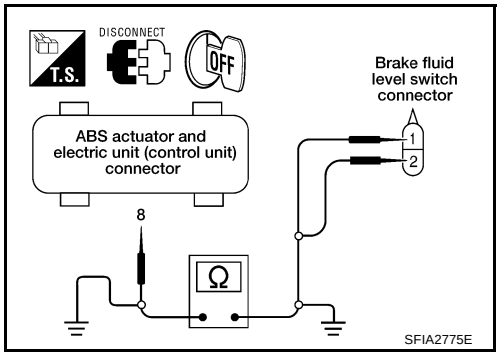

ABS actuator and electric unit (control unit)	Brake fluid level switch	Continuity
8	1	Yes
8	Ground	No
Ground	2	Yes

OK or NG

OK >> GO TO 4.
NG >> If the open or short in harness, repair or replace harness.

4. CHECK BRAKE FLUID LEVEL SWITCH

1. Turn ignition switch “OFF”.
2. Disconnect brake fluid level switch connector E21.
3. Check continuity between brake fluid level switch connector E21 terminal 1 and 2.

Brake fluid level switch	Condition	Continuity
1 - 2	When brake fluid is full in the reservoir tank	No
	When brake fluid is empty in the reservoir tank	Yes

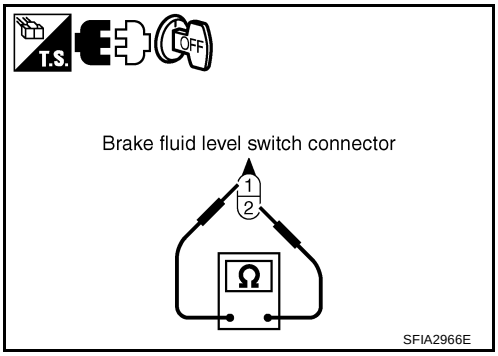

OK or NG

OK >> INSPECTION END.

NG >> ● Brake fluid level switch is malfunctioning. Replace reservoir tank. Refer to BR-16, "BRAKE MASTER CYLINDER" .

● Perform brake fluid level switch self-diagnosis.

VDC OFF Switch

NFS000H0

INSPECTION PROCEDURE

1. CHECK VDC OFF SWITCH

1. Turn ignition switch “OFF”.
2. Disconnect VDC OFF switch connector M17.
3. Check continuity between VDC OFF switch connector M17 terminal 1 and 2.

VDC OFF switch connector	Condition	Continuity
1 - 2	VDC OFF switch ON	Yes
	VDC OFF switch OFF	No

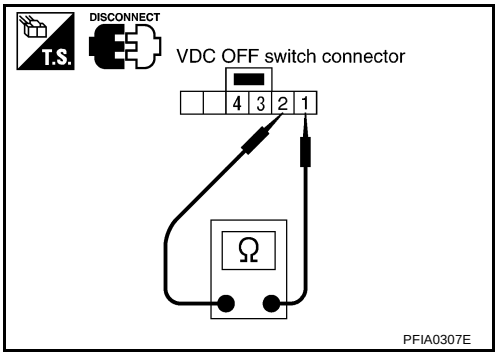

OK or NG

OK >> GO TO 2.

NG >> Replace VDC OFF switch.

2. CHECK VDC OFF SWITCH HARNESS

1. Turn ignition switch “OFF”.
2. Disconnect ABS actuator and electric unit (control uni)t connector E24.
3. Check continuity between VDC OFF switch harness connector M17 and ABS actuator and electric unit (control unit) harness connector E24.

ABS actuator and electric unit (control unit)	VDC OFF switch	Continuity
40	1	Yes
	Ground	No
Ground	2	Yes

OK or NG

OK >> INSPECTION END
NG >> Repair or replace malfunctioning components.

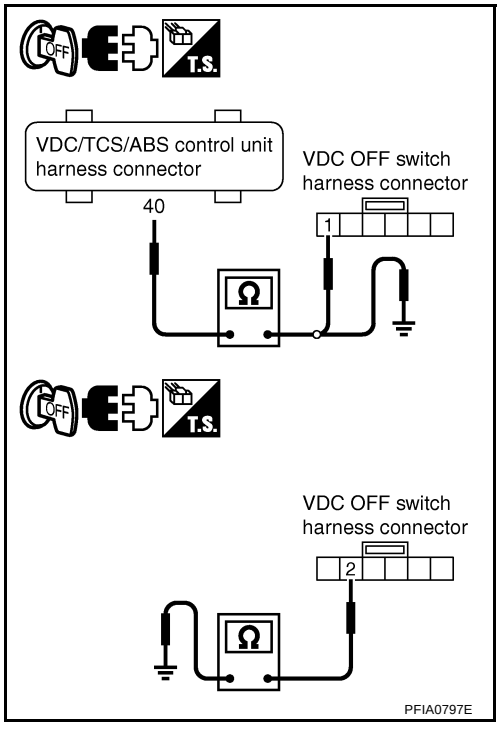

CAN Communication Circuit

NFS000GX

INSPECTION PROCEDURE

- Check the following if “CAN COMM CIRCUIT [U1000]” or “ST ANG SEN COM CIR” is detected in self-diagnostic results of CONSULT-II.

1. CHECK CONNECTOR

1. Turn ignition switch “OFF”.
2. Disconnect VDC/TCS/ABS control unit connector and steering angle sensor connector. Check terminal for deformation, disconnection, looseness, and so on. If any malfunction is found, repair or replace terminal.
3. Securely reconnect connectors and perform self-diagnosis.

Self-diagnostic results
CAN COMM CIRCUIT
ST ANG SEN COM CIR

Is above displayed in the self-diagnosis display?

YES >> Print out self-diagnostic results and go to LAN-49, "CAN System Specification Chart" .
NO >> INSPECTION END

Component Inspection

NFS000H1

VDC OFF SWITCH

1. Turn ignition switch “OFF”.
2. Disconnect VDC OFF switch connector M17.
3. Check continuity between VDC OFF switch connector M17 terminal 1 and 2.

VDC OFF switch connector	Condition	Continuity
1 - 2	VDC OFF switch ON	Yes
	VDC OFF switch OFF	No

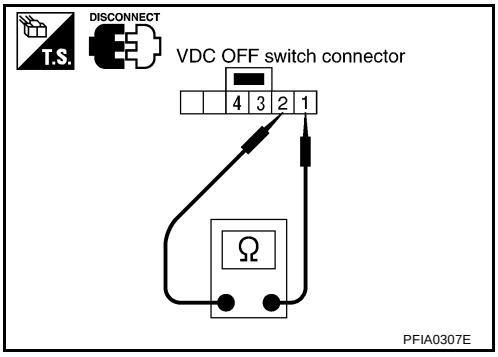

BRAKE FLUID LEVEL SWITCH

1. Turn ignition switch “OFF”.
2. Disconnect brake fluid level switch connector E21.
3. Check continuity between brake fluid level switch connector E21 terminal 1 and 2.

Brake fluid level switch	Condition	Continuity
1 - 2	When brake fluid is full in the reservoir tank	No
	When brake fluid is empty in the reservoir tank	Yes

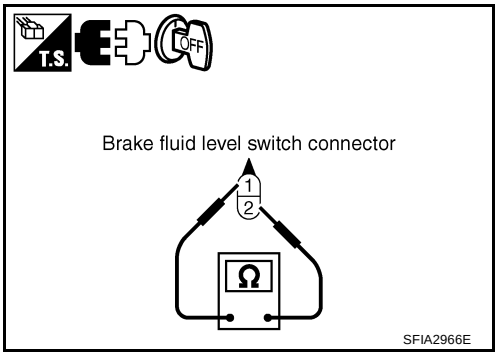

TROUBLE DIAGNOSIS FOR SYMPTOMS

PFP:00007

Excessive ABS Function Operation Frequency

NFS000H2

1. CHECK ABS WARNING LAMP DISPLAY

Make sure ABS warning lamp turns OFF after ignition switch is turned on or when driving.

OK or NG

OK >> GO TO 2.
NG >> Perform self-diagnosis. Refer to BRC-65, "DESCRIPTION" .

2. CHECK BRAKE FORCE DISTRIBUTION

Check front and rear brake force distribution using a brake tester. Refer to BR-39, "SERVICE DATA AND SPECIFICATIONS (SDS)" .

OK or NG

OK >> GO TO 3.
NG >> Check brake system.

3. CHECK FRONT AND REAR AXLE

Make sure that there is no excessive in the front and rear axles. Refer to front axle FAX-6, "FRONT WHEEL HUB AND KNUCKLE" , rear axle RAX-5, "WHEEL HUB" .

OK or NG

OK >> GO TO 4.
NG >> Axle inspection and repair

4. CHECK WHEEL SENSOR AND SENSOR ROTOR

Check the following.

- Wheel sensor installation for damage.
- Sensor rotor installation for damage.
- Wheel sensor connector connection.
- Wheel sensor harness inspection.

OK or NG

OK >> INSPECTION END
NG >> Repair wheel sensor and rotor system.

Unexpected Pedal Reaction

NFS000H3

1. CHECK BRAKE PEDAL STROKE

Check brake pedal stroke. Refer to BR-7, "BRAKE PEDAL" .

Is the stroke too long?

YES >>
- Bleed air from the brake piping.
- Check the brake pedal, brake booster, and master cylinder mount for play, looseness, and brake system for fluid leaks, etc. If any malfunctions are found, make repair.

NO >> GO TO 2.

2. CHECK FUNCTION

1. Turn ignition switch “OFF”.
2. Disconnect ABS actuator and electric unit (control unit) connector E24 and make sure the braking force us sufficient when ABS in not operating. After the inspection, reconnect connector.

OK or NG

OK >> GO TO 4. “CHECK WHEEL SENSOR AND SENSOR ROTOR” in BRC-92, "Excessive ABS Function Operation Frequency" .
NG >> Check brake system.

The Braking Distance is Long

NFS000H4

CAUTION:
On slippery road surfaces, the stopping distance might be longer with ABS operating than when ABS is not operating.

1. CHECK FUNCTION

1. Turn ignition switch “OFF”.
2. Disconnect ABS actuator and electric unit (control unit) connector E24 to deactivate ABS. In this condition, check stopping distance. After inspection, connect connector.

OK or NG

YES >> GO TO 4. “CHECK WHEEL SENSOR AND SENSOR ROTOR” in BRC-92, "Excessive ABS Function Operation Frequency" .
NG >> Perform self-diagnosis. Refer to BRC-65, "DESCRIPTION" .

ABS Function Does Not Operate

NFS000H5

CAUTION:
ABS does not operate when vehicle speed is 10 km/h (6 MPH) or less.

1. CHECK ABS WARNING LAMP DISPLAY

Make sure ABS warning lamp turns OFF after ignition switch is turned on or when driving.

OK or NG

OK >> GO TO 4. “CHECK WHEEL SENSOR AND SENSOR ROTOR” in BRC-92, "Excessive ABS Function Operation Frequency" .
NG >> Perform self-diagnosis. Refer to BRC-65, "DESCRIPTION" .

Pedal Vibration or ABS Operation Sound Occurs

NFS000H6

CAUTION:
Under the following conditions, when brake pedal is lightly depressed (just place a foot on it), ABS is activated and vibration is felt. However, this is normal.

- **When shifting gears**
- **When driving on slippery road**
- **During cornering at high speed**
- **When passing over bumps or grooves**
- **When pulling away just after starting engine [at approximately 10 km/h (6 MPH) or higher]**

1. SYMPTOM CHECK

Check if pedal vibration or operation sound occurs when the engine is started.

OK or NG

OK >> GO TO 2.
NG >> Perform self-diagnosis. Refer to BRC-65, "DESCRIPTION" .

2. INSPECTION CHECK 1

Does vibration occur during normal parking?

CAUTION:
In addition to activation for sudden braking, ABS may activate in conditions such as those listed below.

- **Roads with low surface.**
- **Turning at high speed.**
- **Passing through gusts of wind.**

OK or NG

OK >> GO TO 3.
NG >> Normal

3. INSPECTION CHECK 2

Check for vibration when engine speed is increased while vehicle is stopped.

OK or NG

OK >> GO TO 4
NG >> ● Normal

CAUTION:
Vibration may occur when vehicle is stopped.

4. INSPECTION CHECK 3

Check for vibration when switches of electrical components are operated.

OK or NG

OK >> Check for any wireless devices, or antenna lead near control unit (including wiring).
NG >> GO TO 5.

5. CHECK ABS WARNING LAMP INDICATION

Confirm ABS warning lamp turns on.

OK or NG

OK >> Perform self-diagnosis. Refer to BRC-65, "DESCRIPTION" .
NG >> GO TO 4. “CHECK WHEEL SENSOR AND SENSOR ROTOR” in BRC-92, "Excessive ABS Function Operation Frequency" .

Vehicle Jerks During VDC/TCS/ABS Control

NFS000H7

1. CHECK SELF-DIAGNOSTIC RESULTS

Perform self-diagnosis of ABS actuator and electric unit (control unit).

Are self-diagnostic results indicated?

YES >> Check the corresponding items, make repairs, and perform ABS actuator and electric unit (control unit) self-diagnosis.
NO >> GO TO 2.

2. CHECK ABS ACTUATOR ELECTRIC UNIT (CONTROL UNIT)

1. Turn ignition switch “OFF”.
2. Check ABS actuator and electric unit (control unit) input/output signal. Refer to BRC-62, "Control Unit Input/Output Signal Standard" .

OK or NG

OK >> GO TO 3.
NG >> Check ABS actuator and electric unit (control unit) pin terminals for damage or loose connection with harness connector. If any item is damaged, repair or replace damaged parts.

3. CHECK ECM AND TCM SELF-DIAGNOSTIC RESULTS

Perform ECM and TCM self-diagnosis.

Are self-diagnostic results indicated?

YES >> ● Check the corresponding items.
- ECM: Refer to EC-80, "TROUBLE DIAGNOSIS" .
- TCM: Refer to CVT-33, "TROUBLE DIAGNOSIS" .

NO >> Replace ABS actuator and electric unit (control unit).

ABS Warning Lamp Indication is Not Normal

NFS000LG

NOTE:
For lighting condition of ABS warning lamp. Refer to BRC-73, "ABS WARNING LAMP, VDC OFF INDICATOR LAMP, BRAKE WARNING LAMP AND SLIP INDICATOR LAMP" .

1. CHECK SYSTEM FOR CAN COMMUNICATION LINE

Perform self-diagnosis. Refer to BRC-65, "DESCRIPTION" .

Is the “CAN COMM CIRCUIT [U1000]” displayed?

YES >> Perform trouble diagnosis for CAN communication line. Refer to BRC-90, "CAN Communication Circuit" .
NO >> GO TO 2.

2. CHECK ABS ACTUATOR ELECTRIC UNIT (CONTROL UNIT)

1. Turn ignition switch “OFF”.
2. Check ABS actuator and electric unit (control unit) input/output signal. Refer to BRC-62, "Control Unit Input/Output Signal Standard" .

OK or NG

OK >> GO TO 3.
NG >> Check ABS actuator electric unit (control unit) pin terminals for damage or loose connection with harness connector. If any item is damaged, repair or replace damaged parts.

3. CHECK COMBINATION METER INDICATION

Check the combination meter indication and operation. Refer to DI-15, "Self-Diagnosis Mode of Combination Meter" .

OK or NG

OK >> INSPECTION END.
NG >> Combination meter is malfunctioning. Check combination meter. Refer to DI-4, "COMBINATION METERS" .

Slip Indicator Lamp Indication is Not Normal

NFS000LH

NOTE:
For lighting condition of slip indicator lamp. Refer to BRC-73, "ABS WARNING LAMP, VDC OFF INDICATOR LAMP, BRAKE WARNING LAMP AND SLIP INDICATOR LAMP" .

1. CHECK SYSTEM FOR CAN COMMUNICATION LINE

Perform self-diagnosis. Refer to BRC-65, "DESCRIPTION" .

Is the “CAN COMM CIRCUIT [U1000]” displayed?

YES >> Perform trouble diagnosis for CAN communication line. Refer to BRC-90, "CAN Communication Circuit" .
NO >> GO TO 2.

2. CHECK ABS ACTUATOR ELECTRIC UNIT (CONTROL UNIT)

1. Turn ignition switch “OFF”.
2. Check ABS actuator and electric unit (control unit) input/output signal. Refer to BRC-62, "Control Unit Input/Output Signal Standard" .

OK or NG

OK >> GO TO 3.
NG >> Check ABS actuator electric unit (control unit) pin terminals for damage or loose connection with harness connector. If any item is damaged, repair or replace damaged parts.

3. CHECK COMBINATION METER INDICATION

Check the combination meter indication and operation. Refer to DI-15, "Self-Diagnosis Mode of Combination Meter" .

OK or NG

OK >> INSPECTION END.
NG >> Combination meter is malfunctioning. Check combination meter. Refer to DI-4, "COMBINATION METERS" .

VDC OFF Indicator Lamp Indication is Not Normal

NFS000LI

NOTE:

- For lighting condition of VDC OFF indicator lamp. Refer to BRC-73, "ABS WARNING LAMP, VDC OFF INDICATOR LAMP, BRAKE WARNING LAMP AND SLIP INDICATOR LAMP" .
- Make sure that VDC OFF switch is normal. Refer to BRC-89, "VDC OFF Switch" .

1. CHECK SYSTEM FOR CAN COMMUNICATION LINE

Perform self-diagnosis. Refer to BRC-65, "DESCRIPTION" .

Is the “CAN COMM CIRCUIT [U1000]” displayed?

YES >> Perform trouble diagnosis for CAN communication line. Refer to BRC-90, "CAN Communication Circuit" .
NO >> GO TO 2.

2. CHECK ABS ACTUATOR ELECTRIC UNIT (CONTROL UNIT)

1. Turn ignition switch “OFF”.
2. Check ABS actuator and electric unit (control unit) input/output signal. Refer to BRC-62, "Control Unit Input/Output Signal Standard" .

OK or NG

OK >> GO TO 3.
NG >> Check ABS actuator electric unit (control unit) pin terminals for damage or loose connection with harness connector. If any item is damaged, repair or replace damaged parts.

3. CHECK COMBINATION METER INDICATION

Check the combination meter indication and operation. Refer to DI-15, "Self-Diagnosis Mode of Combination Meter" .

OK or NG

OK >> INSPECTION END.
NG >> Combination meter is malfunctioning. Check combination meter. Refer to DI-4, "COMBINATION METERS" .

WHEEL SENSORS

PFP:47910

Removal and Installation

NFS000H8

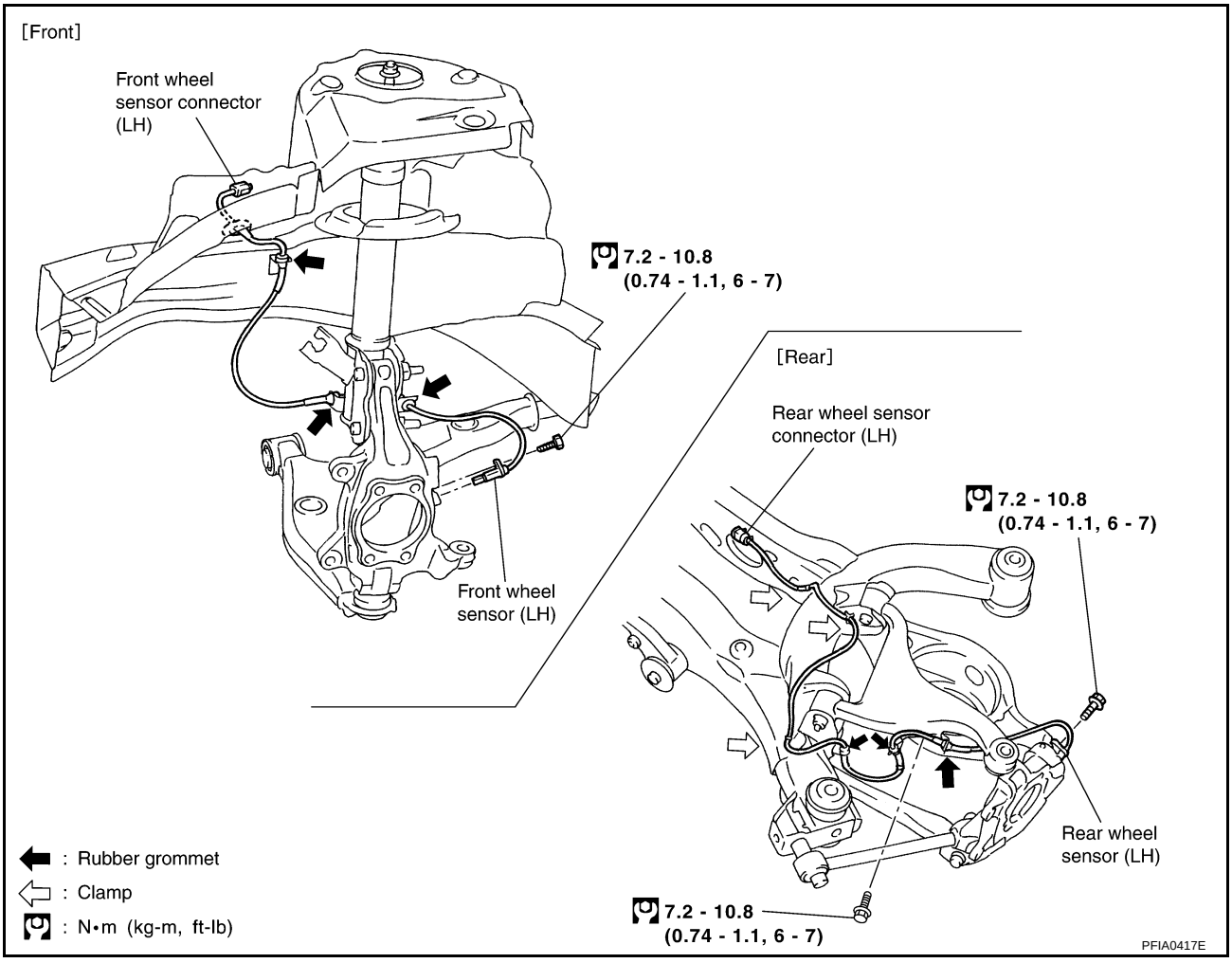

REMOVAL

Be careful of the following.

CAUTION:

- **As much as possible, avoid rotating wheel sensor when removing it. Pull wheel sensors out without pulling on sensor harness.**
- **Take care to avoid damaging wheel sensor edges or rotor teeth. Remove wheel sensor first before removing front or rear wheel hub. This is to avoid damage to wheel sensor wiring and loss of sensor function.**

INSTALLATION

Be careful of the following. Tighten the mounting bolts and nuts to the specified torque. Refer to BRC-97, "Removal and Installation" .

- When installing, make sure there is no foreign material such as iron chips on and in the mounting hole of the wheel sensor. Make sure no foreign material has been caught in the sensor rotor. Remove any foreign material and clean the mount.
- When installing wheel sensor, be sure to press rubber grommets in until they lock at locations shown above in figure. When installed, harness must not be twisted.

SENSOR ROTOR

PFP:47970

Removal and Installation

NFS000H9

REMOVAL

Front

Sensor rotor cannot be disassembled. To replace sensor rotor, replace hub bearing assembly. Refer to FAX-6, "FRONT WHEEL HUB AND KNUCKLE" in “FAX” section.

Rear

Sensor rotor cannot be disassembled. To replace sensor rotor, replace hub bearing assembly. Refer to RAX-5, "WHEEL HUB" in “RAX” section.

INSTALLATION

Installation is the reverse order of removal.

ACTUATOR AND ELECTRIC UNIT (ASSEMBLY)

PFP:47660

Removal and Installation

NFS000HA

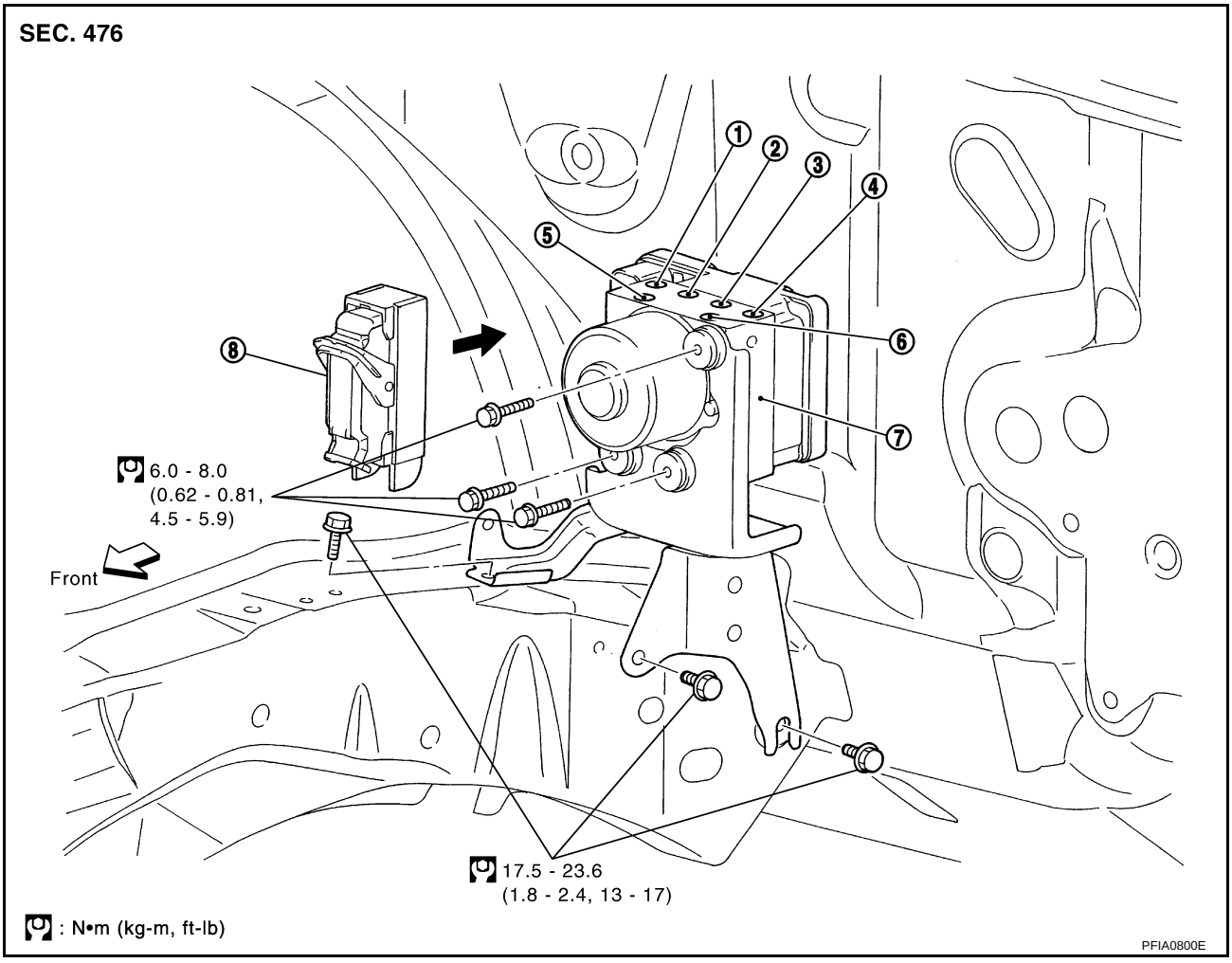

1.	To front left	2.	To rear right	3.	To rear left
4.	To front right	5.	From master cylinder secondary side	6.	From master cylinder primary side
7.	ABS actuator and electric unit (control unit)	8.	Harness connector		

Pay attention to the following when removing actuator.

CAUTION:

- **If the part number on the part number label (pasted on actuator upper surface) is the same, ABS actuator and electric unit (control unit) (integrated in control unit, part No.: 47660 *****) can not be used on another vehicle.**
  If it is used on another vehicle, ABS warning lamp, SLIP indicator lamp, VDC OFF indicator lamp may turn ON or VDC/TCS/ABS may not operate normally.
  When replacing ABS actuator and electric unit (control unit) (integrated in control unit), must use new service parts.
- **Before servicing, disconnect battery cables.**
- **To remove brake tube, use flare nut torque wrench to prevent flare nuts and brake tube from being damaged. To install, use flare nut wrench (commercial service tool).**
- **Do not remove and install actuator by holding harness.**
- **After work is completed, bleed air from brake piping. Refer to BR-13, "Bleeding Brake System" .**

NOTE:

- After performing above works, calibrate decel G sensor (AWD model). Refer to BRC-47, "Calibration of Decel G Sensor" .

- In the case that ABS actuator and electric unit (control unit) are replaced, make sure to adjust position of steering angle sensor. Refer to BRC-46, "Adjustment of Steering Angle Sensor Neutral Position" .

G SENSOR

PFP:47930

Removal and Installation

NFS000HB

REMOVAL

1. Remove center console. Refer to IP-17, "CENTER CONSOLE ASSEMBLY" .
2. Disconnect harness connector.
3. Remove mounting nuts. Remove yaw rate/side/decel G sensor.

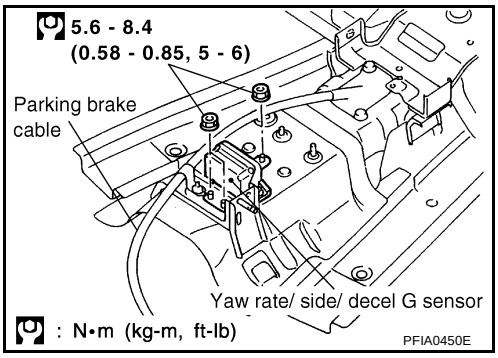

CAUTION:

- **Do not drop or strike the yaw rate/side/decel G sensor, because it has little endurance to impact.**
- **Do not use power tool etc., because yaw rate/side/decel G sensor is weak for the impact.**

INSTALLATION

Installation is in the revers order of removal.

CAUTION:

- **Do not drop or strike the yaw rate/side/decel G sensor, because it has little endurance to impact.**

NOTE:

- After performing above work, calibrate decel G sensor (AWD model). Refer to BRC-47, "Calibration of Decel G Sensor" .

STEERING ANGLE SENSOR

PFP:25554

Removal and Installation

NFS000HC

Refer to SRS-45, "SPIRAL CABLE" .

NOTE:

- Steering angle sensor is built into the spiral cable.
- In the case that ABS actuator and electric unit (control unit) are replaced, make sure to adjust position of steering angle sensor. Refer to BRC-46, "Adjustment of Steering Angle Sensor Neutral Position" .