SECTION AT

CONTENTS

CONTENTS (Cont'd)

When you read wiring diagrams:
- **Read GI section, "HOW TO READ WIRING DIAGRAMS".**
- **See EL section, "POWER SUPPLY ROUTING" for power distribution circuit.**

When you perform trouble diagnoses, read GI section, "HOW TO FOLLOW FLOW CHART IN TROUBLE DIAGNOSES" and "HOW TO PERFORM EFFICIENT DIAGNOSIS FOR AN ELECTRICAL INCIDENT".

Special Service Tools

The actual shapes of Kent-Moore tools may differ from those of special service tools illustrated here.

Tool number (Kent-Moore No.) Tool name	Description	
ST2505S001 (J34301-C) Oil pressure gauge set ① ST25051001 (—) Oil pressure gauge ② ST25052000 (—) Hose ③ ST25053000 (—) Joint pipe ④ ST25054000 (—) Adapter ⑤ ST25055000 (—) Adapter	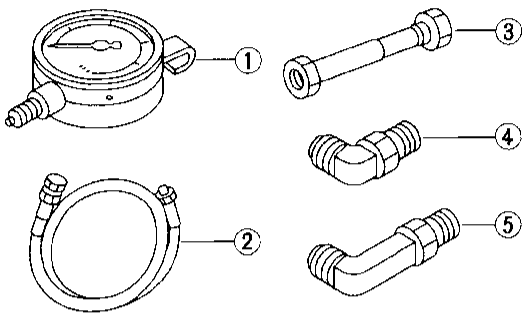 NT097	Measuring line pressure
ST07870000 (J37068) Transmission case stand	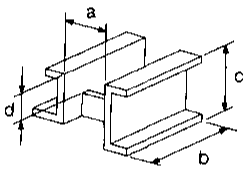 NT421	Disassembling and assembling A/T **a: 182 mm (7.17 in)** **b: 282 mm (11.10 in)** **c: 230 mm (9.06 in)** **d: 100 mm (3.94 in)**
KV31102100 (J37065) Torque converter one-way clutch check tool	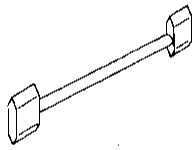 NT098	Checking one-way clutch in torque converter
ST25850000 (J25721-A) Sliding hammer	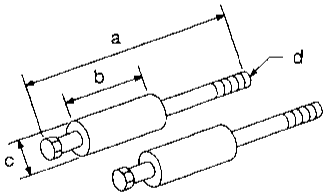 NT422	Removing oil pump assembly **a: 179 mm (7.05 in)** **b: 70 mm (2.76 in)** **c: 40 mm (1.57 in) dia.** **d: M12 x 1.75P**
KV31102400 (J34285 and J34285-87) Clutch spring compressor	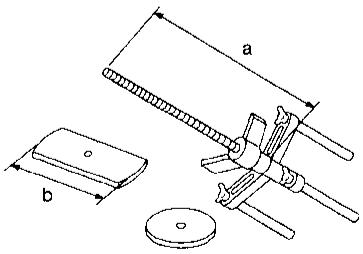 NT423	Removing and installing clutch return springs **a: 320 mm (12.60 in)** **b: 174 mm (6.85 in)**

Special Service Tools (Cont'd)

Tool number (Kent-Moore No.) Tool name	Description	
ST33200000 (J26082) Drift	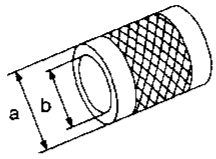 NT091	Installing oil pump housing oil seal Installing rear oil seal **a: 60 mm (2.36 in) dia.** **b: 44.5 mm (1.752 in) dia.**
(J34291) Shim setting gauge set	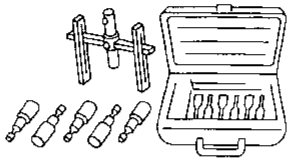 NT101	Selecting oil pump cover bearing race and oil pump thrust washer

Supplemental Restraint System (SRS) "AIR BAG"

The Supplemental Restraint System "Air Bag", used along with a seat belt, helps to reduce the risk or severity of injury to the driver and front passenger in a frontal collision. The Supplemental Restraint System consists of air bag modules (located in the center of the steering wheel and on the instrument panel on the passenger side), a diagnosis sensor unit, warning lamp, wiring harness and spiral cable. Information necessary to service the system safely is included in the **RS section** of this Service Manual.

WARNING:

- **To avoid rendering the SRS inoperative, which could increase the risk of personal injury or death in the event of a collision which would result in air bag inflation, all maintenance must be performed by an authorized NISSAN dealer.**
- **Improper maintenance, including incorrect removal and installation of the SRS, can lead to personal injury caused by unintentional activation of the system.**
- **Do not use electrical test equipment on any circuit related to the SRS unless instructed to in this Service Manual. SRS wiring harnesses are covered with yellow insulation either just before the harness connectors or for the complete harness, for easy identification.**

Precautions for On Board Diagnostic (OBD) System of A/T and Engine

The ECM (ECCS control module) has an on board diagnostic system. It will light up the malfunction indicator lamp (MIL) to warn the driver of a malfunction causing emission deterioration.

CAUTION:

- **Be sure to turn the ignition switch "OFF" and disconnect the negative battery terminal before the repair or inspection work. The open/short circuit of the related switches, sensors, solenoid valves, etc. will cause the MIL to light up.**
- **Be sure to connect and lock the connectors securely after the work. The loose (unlocked) connector will cause the MIL to light up due to the open circuit. (Be sure to connect the connector without water, grease, dirt, bent terminals, etc. in it.)**
- **Be sure to route and clamp the harnesses properly after work. The interference of the harness with a bracket, etc. may cause the MIL to light up due to the short circuit.**
- **Be sure to erase the unnecessary (already fixed) malfunction information in the A/T control unit or ECM before returning the vehicle to the customer.**

Precautions

- Before proceeding with disassembly, thoroughly clean the outside of the transmission. It is important to prevent the internal parts from becoming contaminated by dirt or other foreign matter.
- Disassembly should be done in a clean work area.
- Use lint-free cloth or towels for wiping parts clean. Common shop rags can leave fibers that could interfere with the operation of the transmission.
- Place disassembled parts in order for easier and proper assembly.
- All parts should be carefully cleaned with a general purpose, non-flammable solvent before inspection or reassembly.
- Gaskets, seals and O-rings should be replaced any time the transmission is disassembled.
- When connecting A/T control unit harness connector, tighten bolt until red projection is in line with connector.

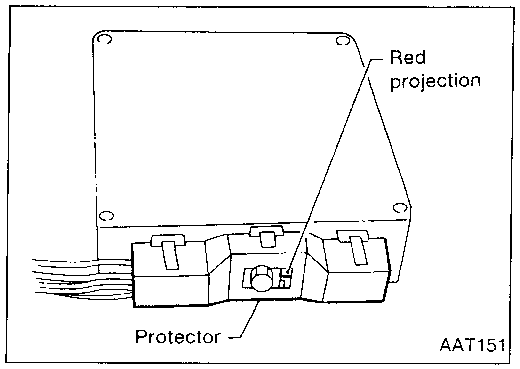

- It is very important to perform functional tests whenever they are indicated.
- The valve body contains precision parts and requires extreme care when parts are removed and serviced. Place removed parts in a parts rack in order to replace them in correct positions and sequences. Care will also prevent springs and small parts from becoming scattered or lost.
- Properly installed valves, sleeves, plugs, etc. will slide along bores in valve body under their own weight.
- Before assembly, apply a coat of recommended ATF to all parts. Apply petroleum jelly to protect O-rings and seals, and to hold bearings and washers in place during assembly. Do not use grease.
- Extreme care should be taken to avoid damage to O-rings, seals and gaskets when assembling.
- Replace ATF cooler if excessive foreign material is found in oil pan or clogging strainer. Refer to "ATF COOLER SERVICE", on next page.
- After overhaul, refill the transmission with new ATF.
- When the A/T drain plug is removed, only some of the fluid is drained. Old A/T fluid will remain in torque converter and ATF cooling system. Always follow the procedures under "Changing A/T Fluid" in the MA section when changing A/T fluid.

Service Notice or Precautions

FAIL-SAFE

The A/T control unit has an electronic Fail-Safe (limp home mode). This allows the vehicle to be driven even if a major electrical input/output device circuit is damaged.
Under Fail-Safe, the vehicle always runs in third gear even with a shift lever position of "1", "2" or "D". Customer may complain of "sluggish or poor acceleration".
When the Fail-Safe operation occurs the next time the key is turned to the "ON" position, the O/D OFF indicator lamp will blink for about 8 seconds. (For diagnosis, refer to AT-36.)
Fail-Safe may activate without electrical circuit damages if the vehicle is driven under extreme conditions (such as excessive wheel spins and emergency braking immediately afterwards). In this case, turn the ignition key "OFF" for 5 seconds and then "ON" to recover normal shift pattern.
The blinking of the O/D OFF indicator lamp for about 8 seconds will appear only once and be cleared. The customer may resume normal driving conditions by chance.
Always follow the "WORK FLOW" (Refer to AT-34).
The SELF-DIAGNOSIS results will be as follows:

The first SELF-DIAGNOSIS will indicate the damage of the vehicle speed sensor or the revolution sensor.
During the next SELF-DIAGNOSIS performed after checking the sensor, no damages will be indicated.

ATF COOLER SERVICE

Replace ATF cooler if excessive foreign material is found in oil pan or clogging strainer.
KA24DE engine (with RE4R01A) ... fin type cooler

Replace radiator lower tank (which includes ATF cooler) with a new one and flush cooler line using cleaning solvent and compressed air.

OBD-II SELF-DIAGNOSIS

- A/T self-diagnosis is performed by the A/T control unit in combination with the ECM. The results can be read through the blinking pattern of the O/D OFF indicator or the malfunction indicator lamp (MIL). Refer to the table on AT-22 for the indicator used to display each self-diagnostic result.
- The self-diagnostic results indicated by the MIL are automatically stored in both the ECM and A/T control unit memories.

  Always perform the procedure "HOW TO ERASE DTC" on AT-20 to complete the repair and avoid unnecessary blinking of the MIL.
- The following self-diagnostic items can be detected using ECM self-diagnostic results mode* only when the O/D OFF indicator lamp does not indicate any malfunctions.
  –Improper shifting to 1st, 2nd, 3rd, or 4th gear position
  –Improper torque converter clutch operation
  –Improper lock-up operation.

*: For details of OBD-II, refer to EC section ("ON BOARD DIAGNOSTIC SYSTEM DESCRIPTION").

A/T Electrical Parts Location

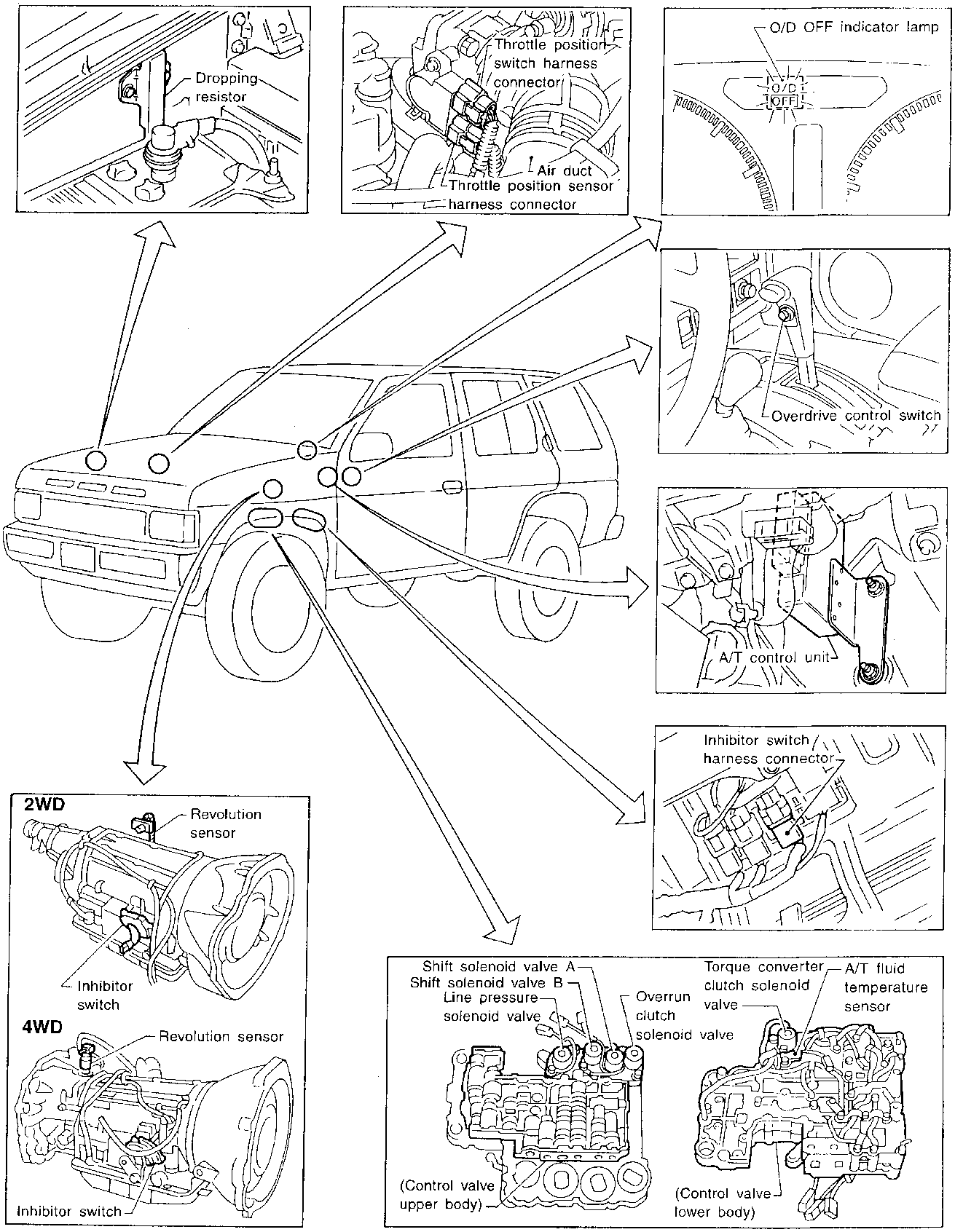

SAT327IA

Circuit Diagram

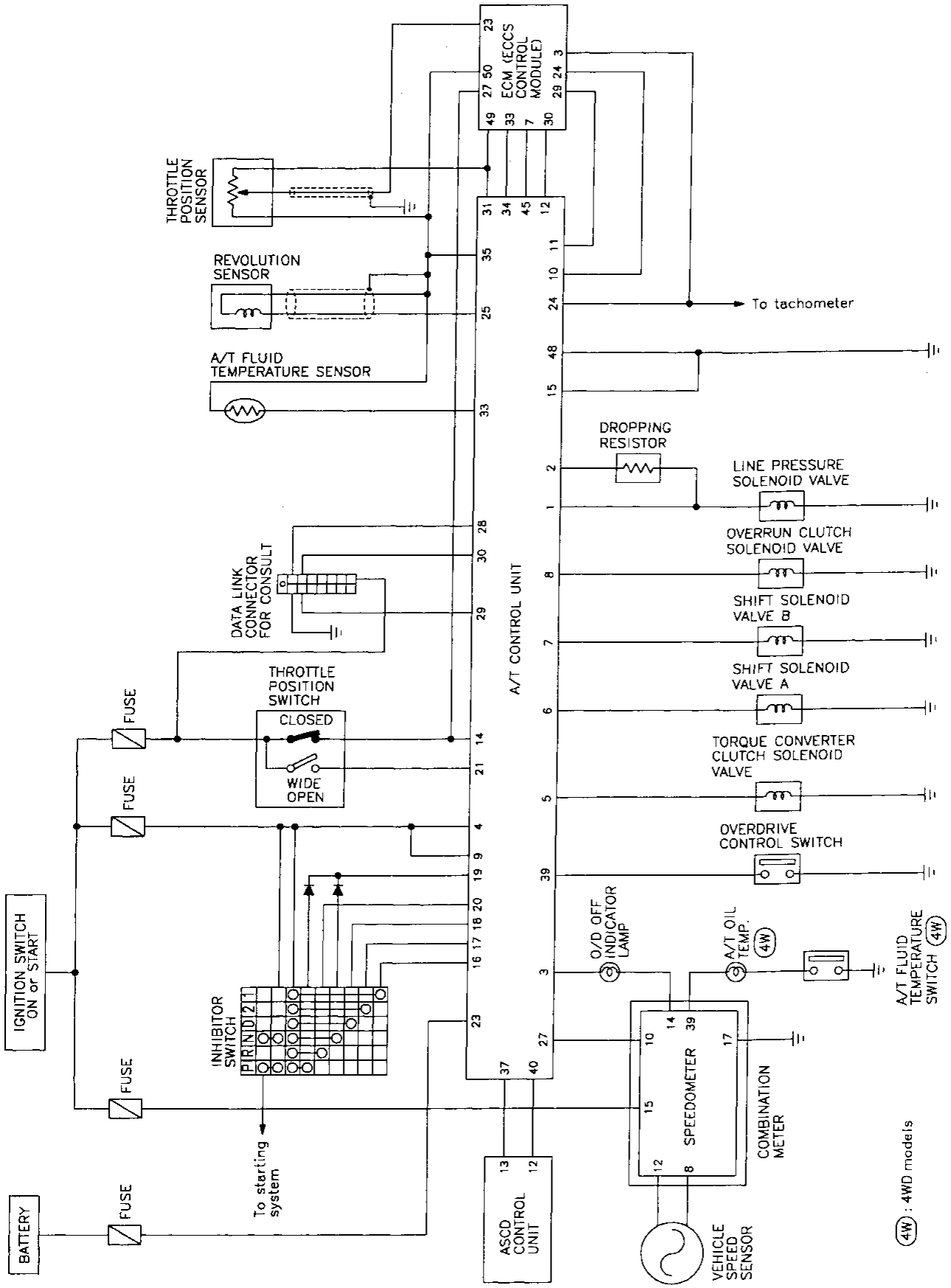

MAT499A

Wiring Diagram — AT —

AT-A/T-01

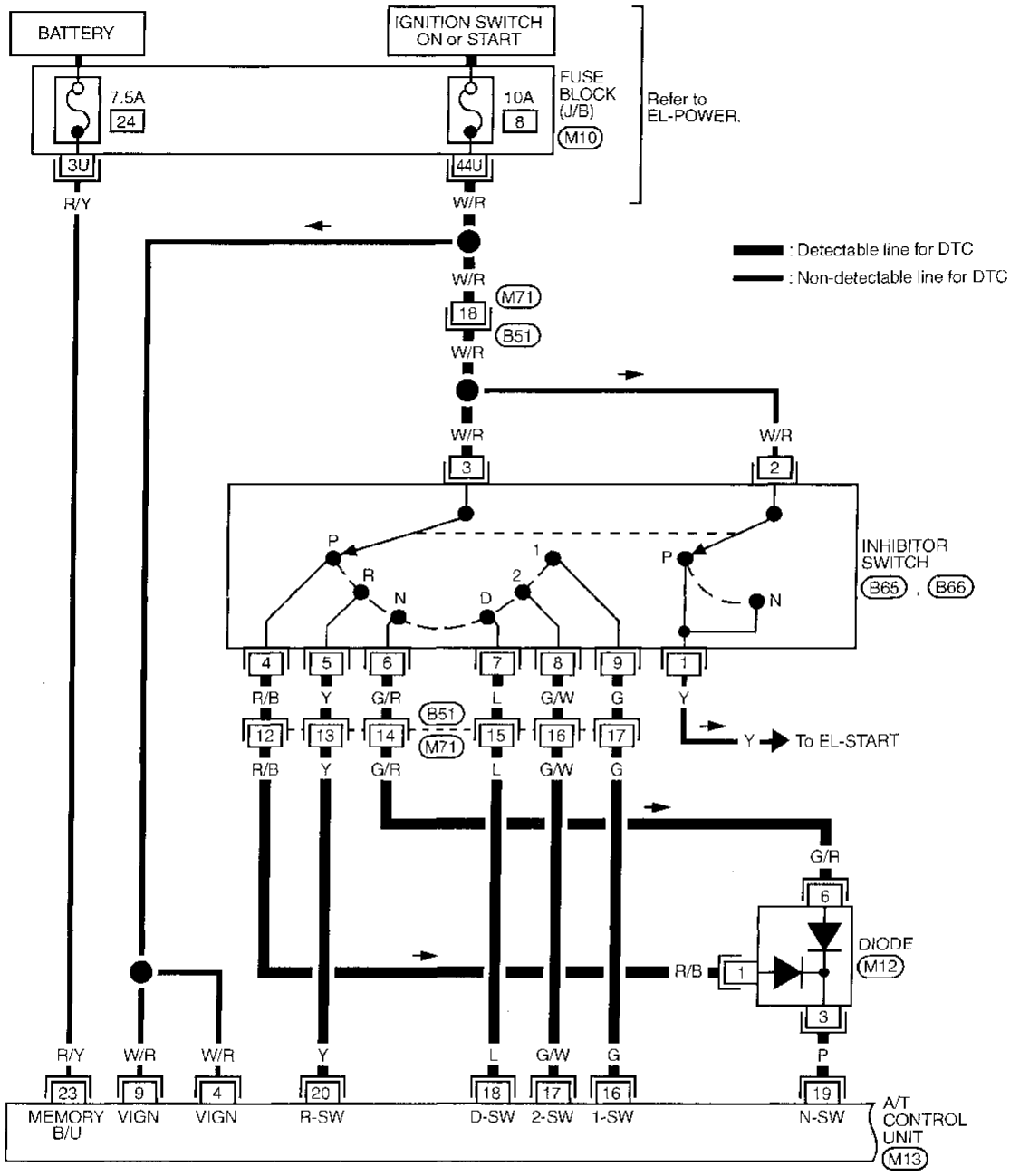

Refer to last page (Foldout page).
M10
M13

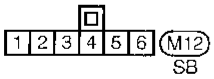

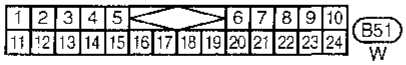

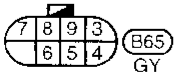

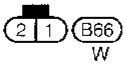

MAT500A

Wiring Diagram — AT — (Cont'd)

AT-A/T-02

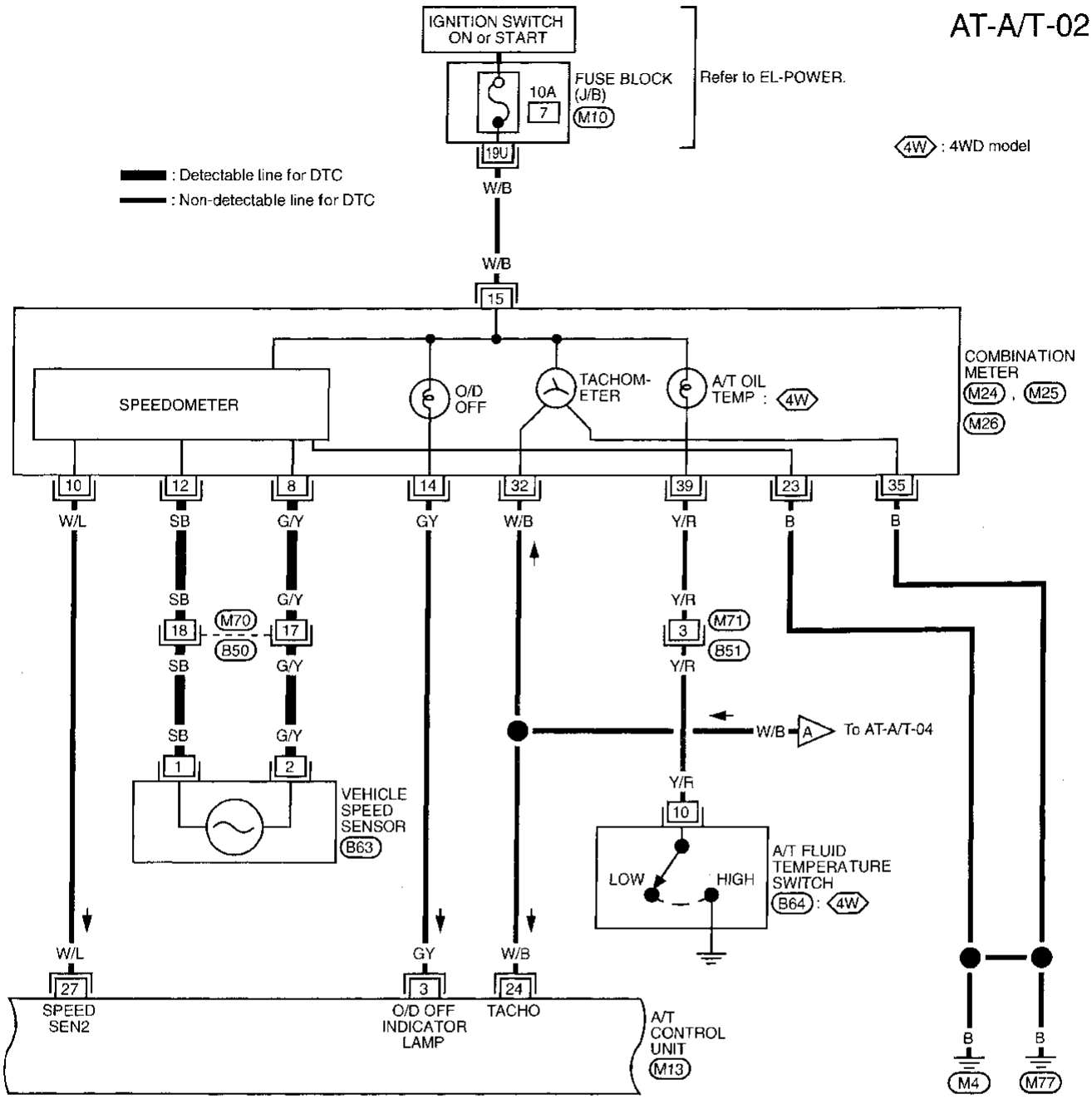

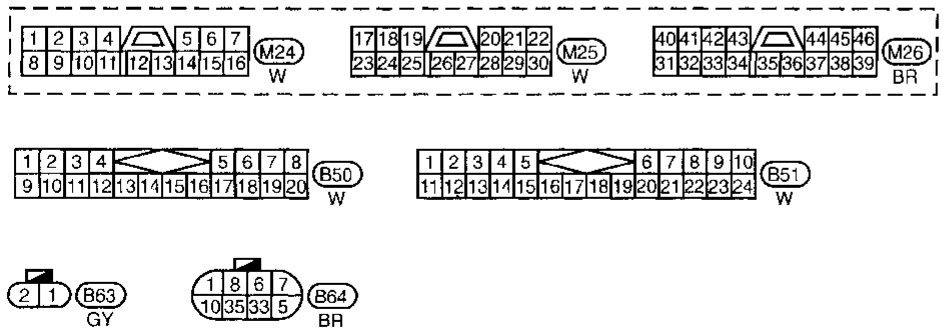

Refer to last page (Foldout page).
M10
M13

MAT501A

Wiring Diagram — AT — (Cont'd)

AT-A/T-03

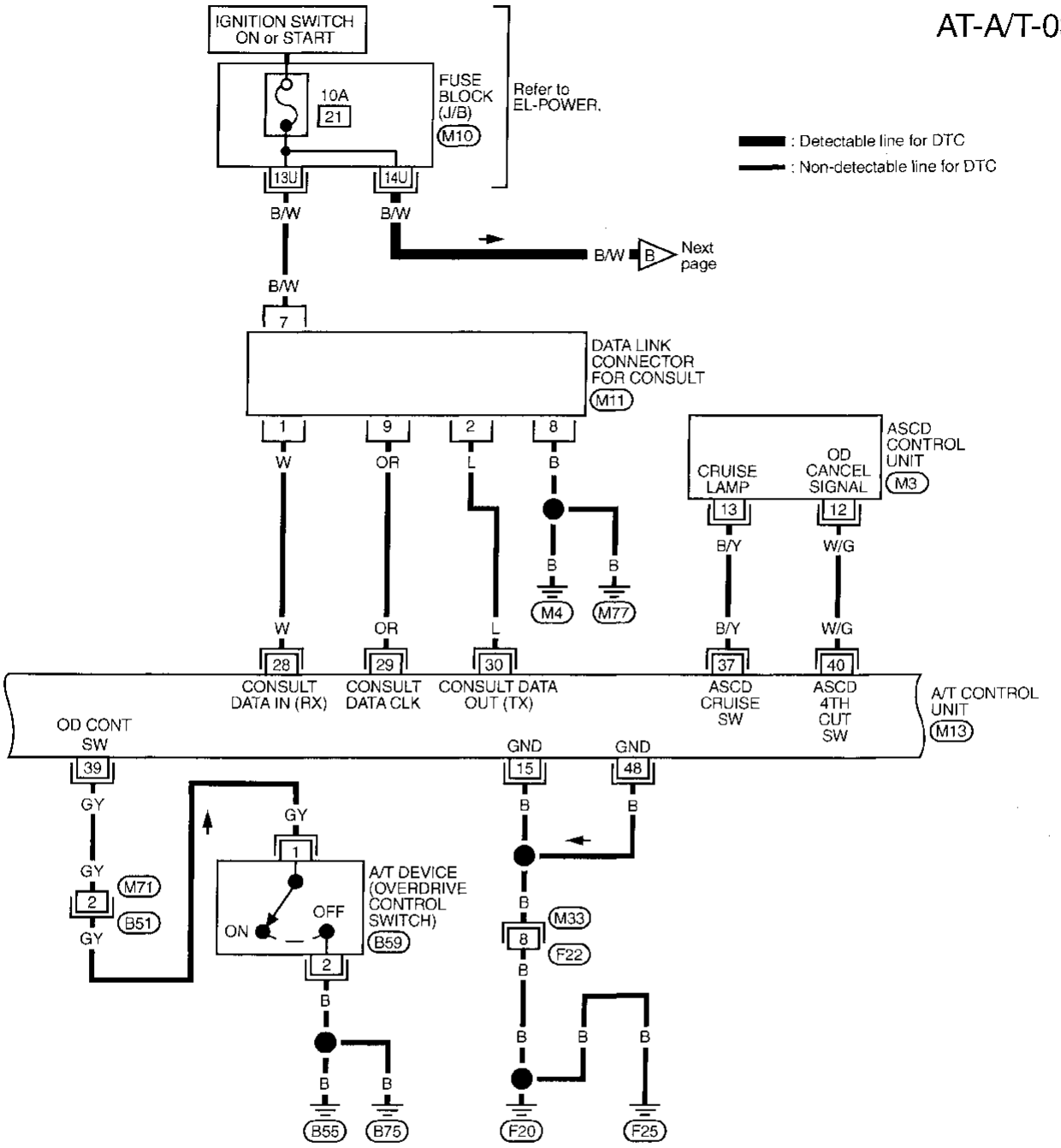

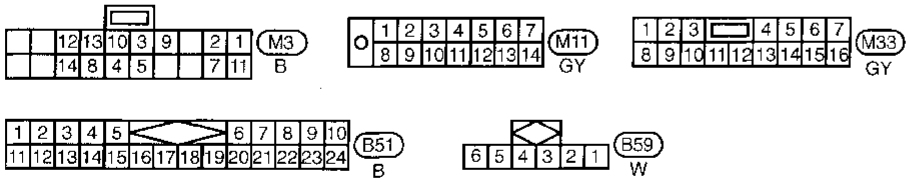

Refer to last page (Foldout page).
M10
M13

MAT502A

Wiring Diagram — AT — (Cont'd)

AT-A/T-04

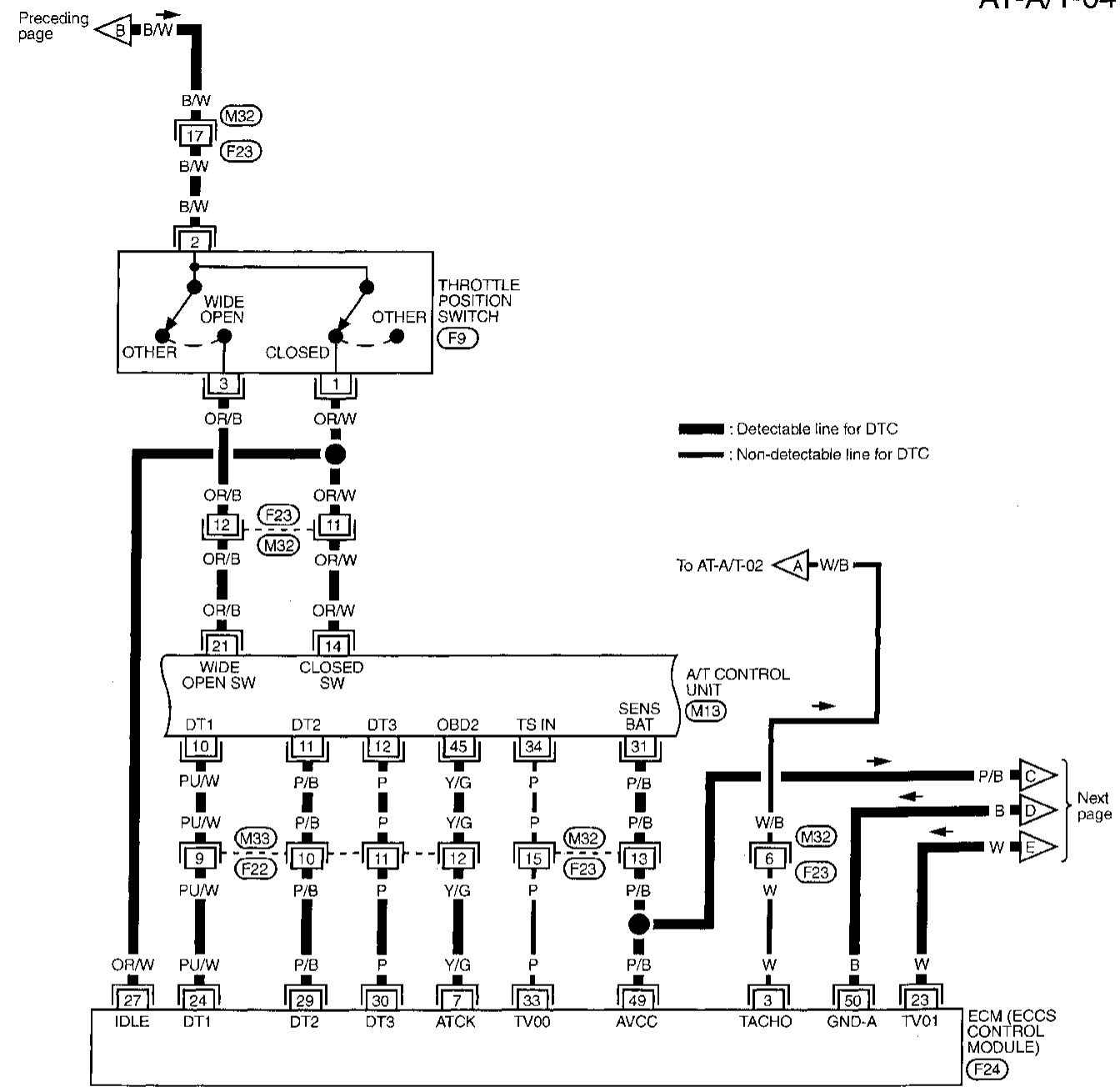

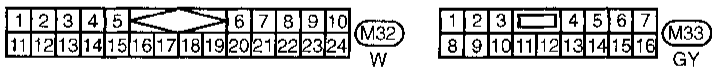

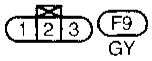

Refer to last page (Foldout page).

M13

F24

MAT503A

Wiring Diagram — AT — (Cont'd)

AT-A/T-05

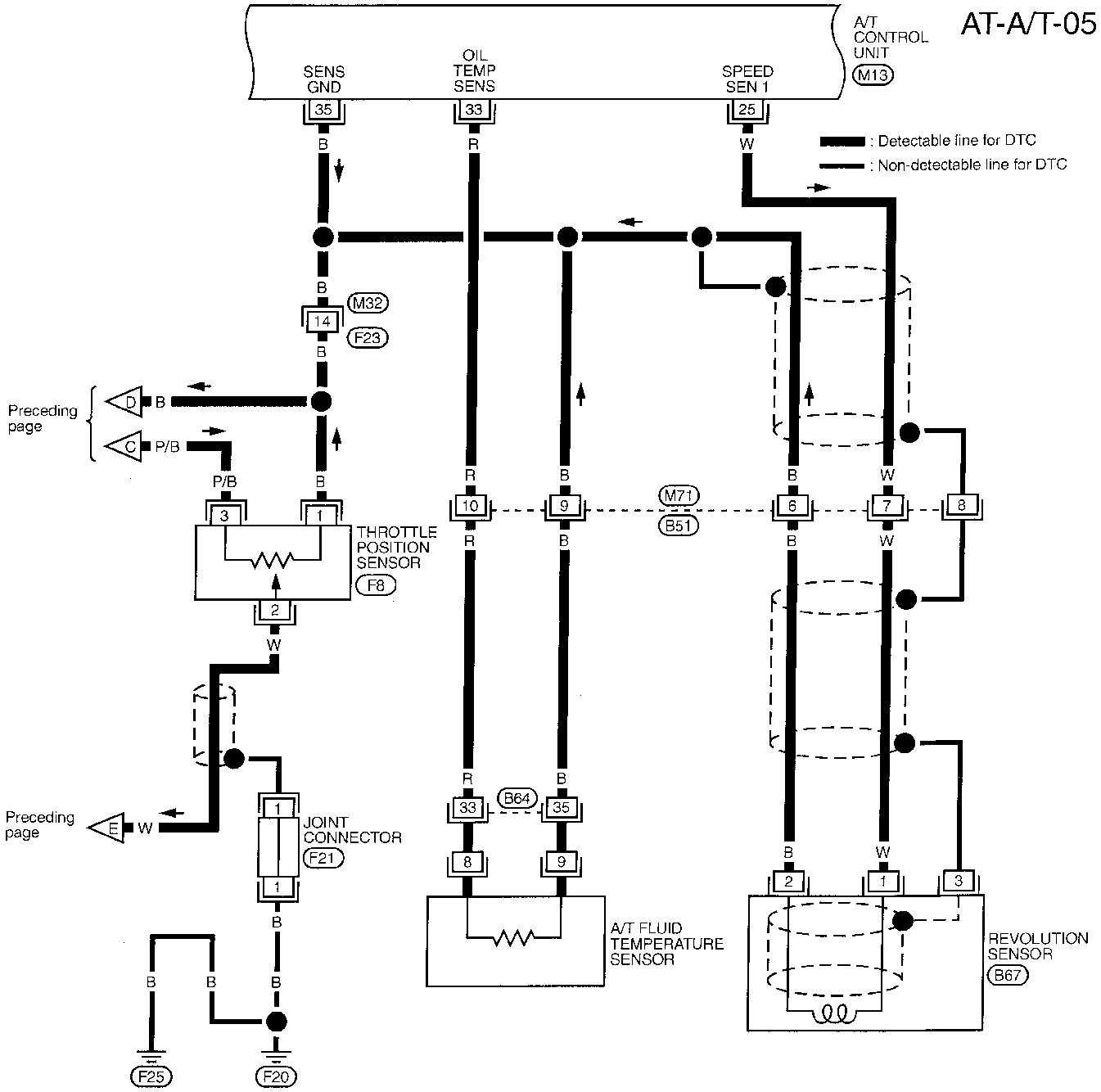

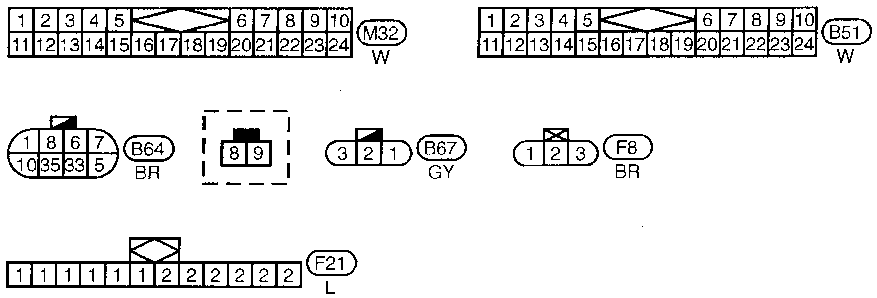

Refer to last page (Foldout page).
M13

MAT504A

Wiring Diagram — AT — (Cont'd)

AT-A/T-06

: Detectable line for DTC
: Non-detectable line for DTC

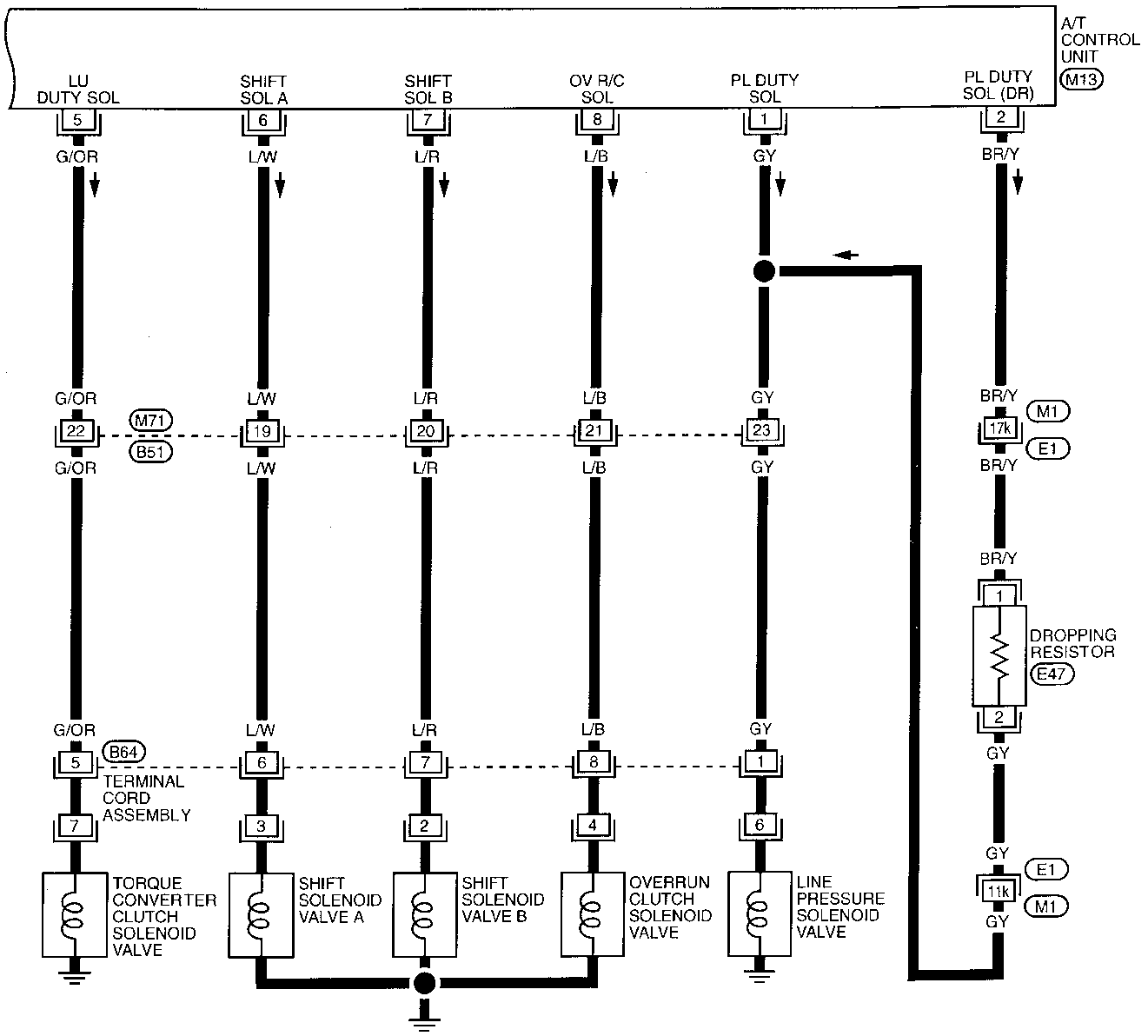

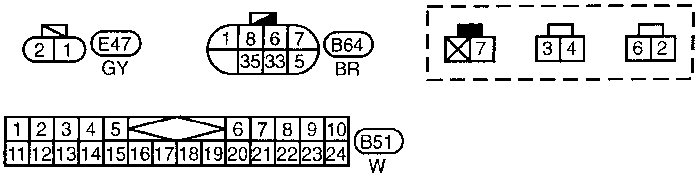

Refer to last page (Foldout page).
E1 , M1
M13

MAT505A

Cross-sectional View

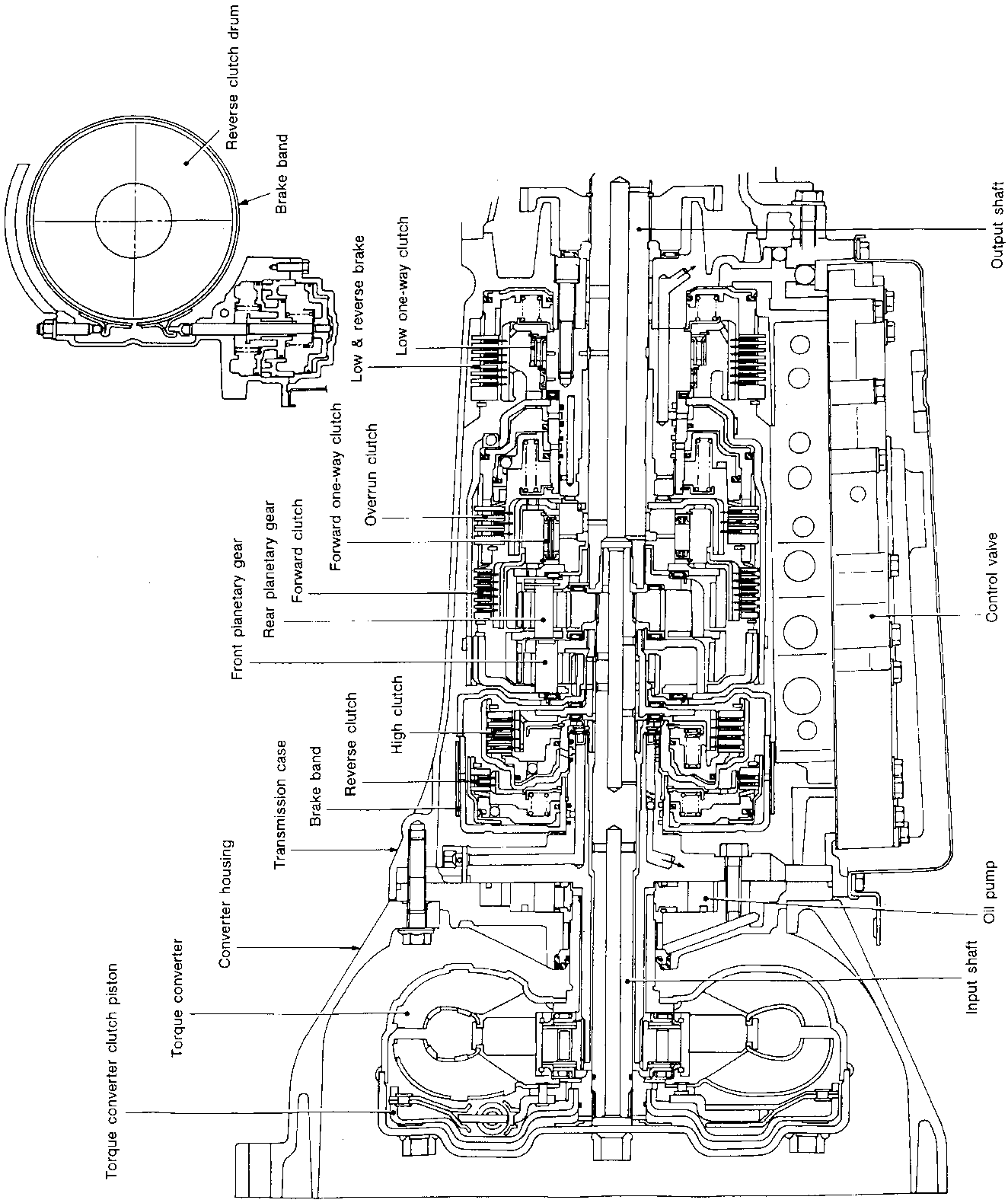

SAT125BA

Hydraulic Control Circuit

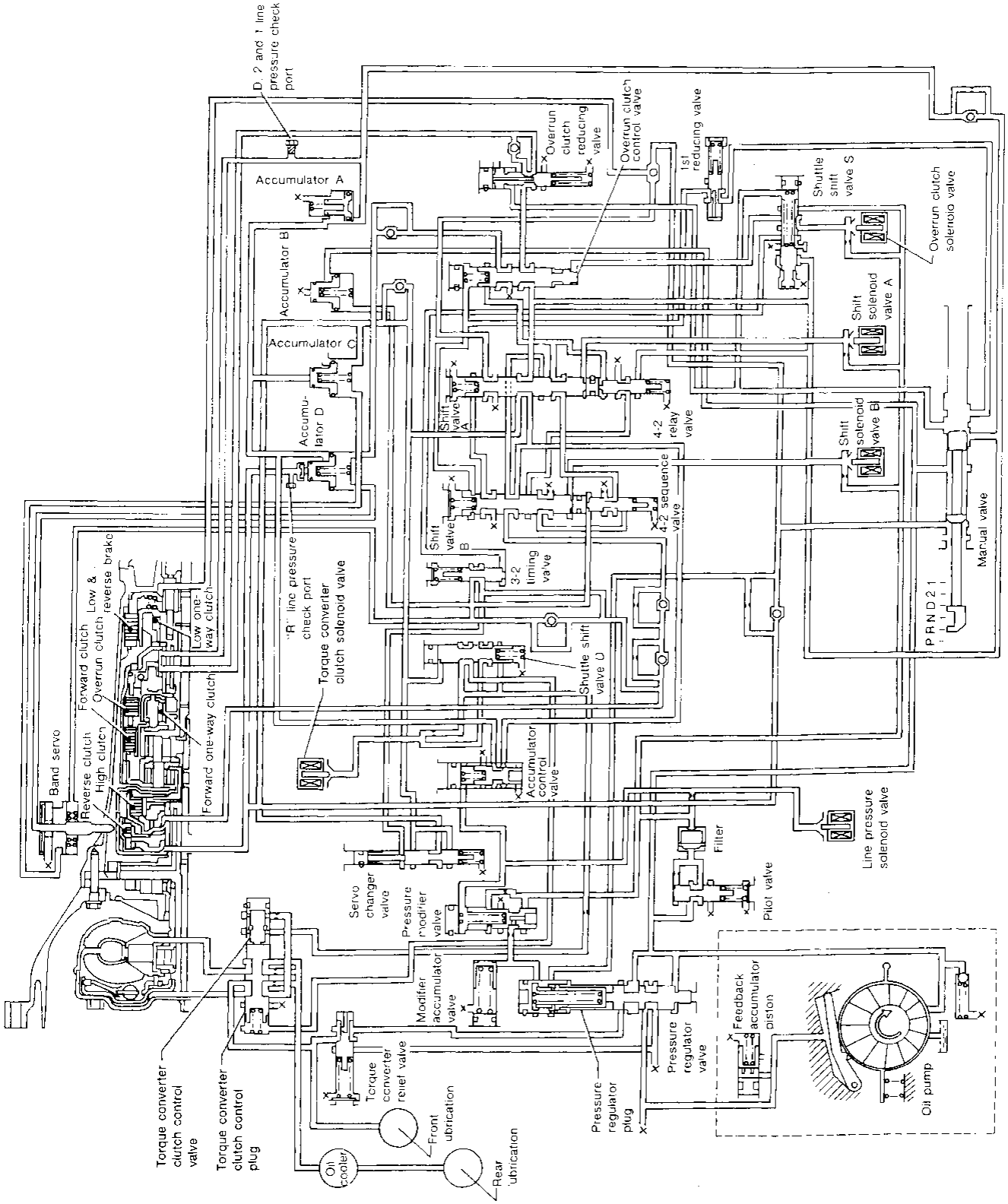

SAT624GA

Shift Mechanism

CONSTRUCTION

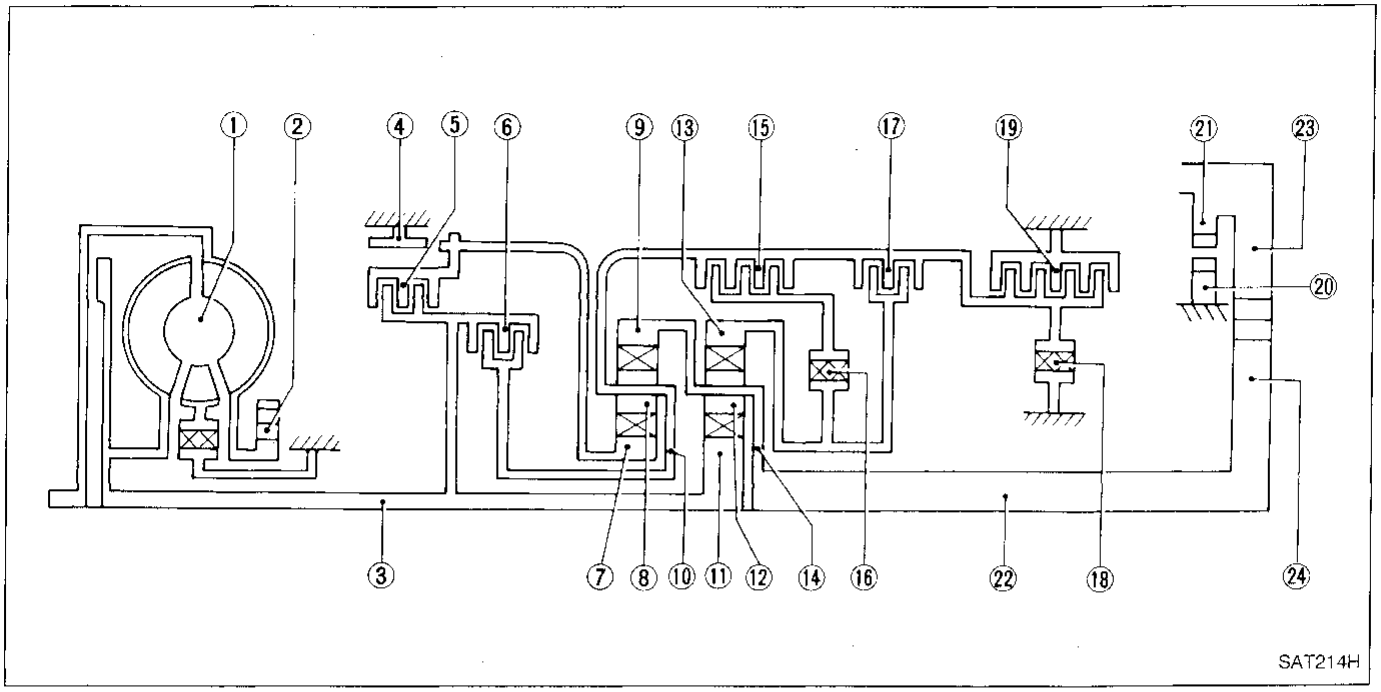

① Torque converter
② Oil pump
③ Input shaft
④ Brake band
⑤ Reverse clutch
⑥ High clutch
⑦ Front sun gear
⑧ Front pinion gear
⑨ Front internal gear
⑩ Front planetary carrier
⑪ Rear sun gear
⑫ Rear pinion gear
⑬ Rear internal gear
⑭ Rear planetary carrier
⑮ Forward clutch
⑯ Forward one-way clutch
⑰ Overrun clutch
⑱ Low one-way clutch
⑲ Low & reverse brake
⑳ Parking pawl
㉑ Parking gear
㉒ Output shaft
㉓ Idle gear
㉔ Output gear

FUNCTION OF CLUTCH AND BRAKE

Clutch and brake components	Abbr.	Function
⑤ Reverse clutch	R/C	To transmit input power to front sun gear ⑪.
⑥ High clutch	H/C	To transmit input power to front planetary carrier ⑩.
⑮ Forward clutch	F/C	To connect front planetary carrier ⑩ with forward one-way clutch ⑯.
⑰ Overrun clutch	O/C	To connect front planetary carrier ⑩ with rear internal gear ⑬.
④ Brake band	B/B	To lock front sun gear ⑦.
⑯ Forward one-way clutch	F/O.C	When forward clutch ⑮ is engaged, to stop rear internal gear ⑬ from rotating in opposite direction against engine revolution.
⑱ Low one-way clutch	L/O.C	To stop front planetary carrier ⑩ from rotating in opposite direction against engine revolution.
⑲ Low & reverse brake	L & R/B	To lock front planetary carrier ⑩.

Shift Mechanism (Cont'd)

OPERATION OF CLUTCH AND BRAKE

Shift position		Reverse clutch	High clutch	Forward clutch	Overrun clutch	Band servo 2nd apply	Band servo 3rd release	Band servo 4th apply	Forward one-way clutch	Low one-way clutch	Low & reverse brake	Lock-up	Remarks
P													PARK POSITION
R		○									○		REVERSE POSITION
N													NEUTRAL POSITION
D*4	1st			○	*1⊗				●	●			Automatic shift 1 ↔ 2 ↔ 3 ↔ 4
	2nd			○	*1◎	○			●				
	3rd		○	○	*1◎	*2X	X		●			*5○	
	4th		○	X		*3X	X	○				○	
2	1st			○	⊗				●	●			Automatic shift 1 ↔ 2 ← 3
	2nd			○	◎	○			●				
1	1st			○	○				●		○		Locks (held stationary) in 1st speed 1 ← 2 ← 3
	2nd			○	○	○			●				

*1: Operates when overdrive control switch is being set in "OFF" position.
*2: Oil pressure is applied to both 2nd "apply" side and 3rd "release" side of band servo piston. However, brake band does not contract because oil pressure area on the "release" side is greater than that on the "apply" side.
*3: Oil pressure is applied to 4th "apply" side in condition *2 above, and brake band contracts.
*4: A/T will not shift to 4th when overdrive control switch is set in "OFF" position.
*5: Operates when overdrive control switch is "OFF".

○ : Operates

◎ : Operates when throttle opening is less than 1/16, activating engine brake.

● : Operates during "progressive" acceleration.

⊗ : Operates but does not affect power transmission.

⊗ : Operates when throttle opening is less than 1/16, but does not affect engine brake.

Control System

OUTLINE

The RE4R01A automatic transmission senses vehicle operating conditions through various sensors. It always controls the optimum shaft position and reduces shifting and lock-up shocks.

SENSORS		CONTROL UNIT		ACTUATORS
Inhibitor switch Throttle position sensor Closed throttle position switch Wide open throttle position switch Engine speed signal A/T fluid temperature sensor Revolution sensor Vehicle speed sensor Overdrive control switch	▶	Shift control Line pressure control Lock-up control Overrun clutch control Timing control Fail-safe control Self-diagnosis	▶	Shift solenoid valve A Shift solenoid valve B Overrun clutch solenoid valve Torque converter clutch solenoid valve Line pressure solenoid valve O/D OFF indicator lamp

CONTROL SYSTEM

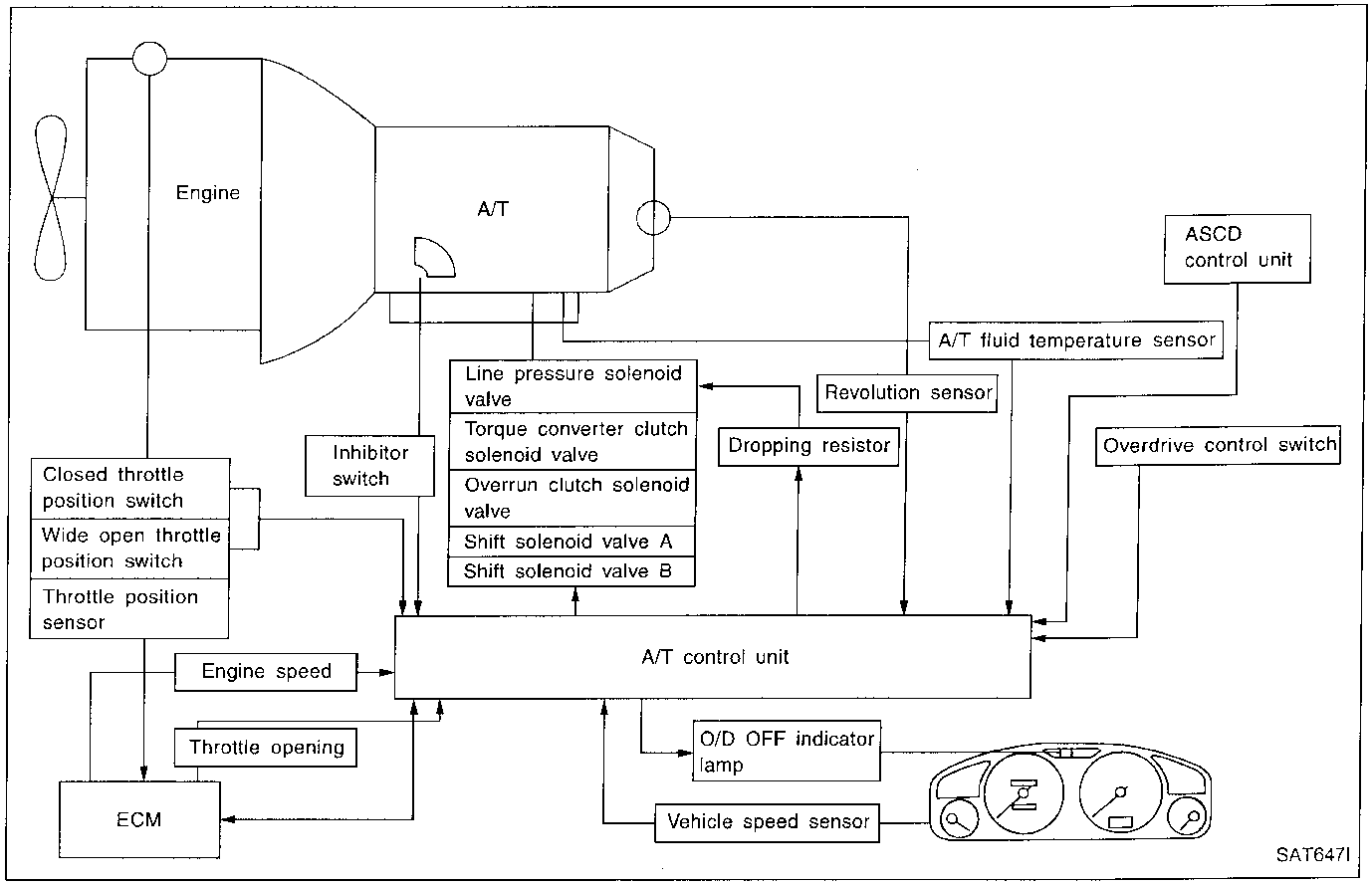

A/T CONTROL UNIT FUNCTION

The function of the A/T control unit is to:

- Receive input signals sent from various switches and sensors.
- Determine required line pressure, shifting point, lock-up operation, and engine brake operation.
- Send required output signals to the respective solenoids.

INPUT/OUTPUT SIGNAL OF A/T CONTROL UNIT

	Sensors and solenoid valves	Function
Input	Inhibitor switch	Detects select lever position and sends a signal to A/T control unit.
	Throttle position sensor	Detects throttle valve position and sends a signal to A/T control unit.
	Closed throttle position switch	Detects throttle valve's fully-closed position and sends a signal to A/T control unit.
	Wide open throttle position switch	Detects a throttle valve position of greater than 1/2 of full throttle and sends a signal to A/T control unit.
	Engine speed signal	From ECM (ECCS control module).
	A/T fluid temperature sensor	Detects transmission fluid temperature and sends a signal to A/T control unit.
	Revolution sensor	Detects output shaft rpm and sends a signal to A/T control unit.
	Vehicle speed sensor	Used as an auxiliary vehicle speed sensor. Sends a signal when revolution sensor (installed on transmission) malfunctions.
	Overdrive control switch	Sends a signal, which prohibits a shift to "D_4" (overdrive) position, to the A/T control unit.
Output	Shift solenoid valve A/B	Selects shifting point suited to driving conditions in relation to a signal sent from A/T control unit.
	Line pressure solenoid valve	Regulates (or decreases) line pressure suited to driving conditions in relation to a signal sent from A/T control unit.
	Torque converter clutch solenoid valve	Regulates (or decreases) lock-up pressure suited to driving conditions in relation to a signal sent from A/T control unit.
	Overrun clutch solenoid valve	Controls an "engine brake" effect suited to driving conditions in relation to a signal sent from A/T control unit.
	O/D OFF indicator lamp	Shows A/T control unit faults, when A/T control components malfunction.

Introduction

The ECM (ECCS control module) provides two functions for the A/T system. One function is to receive a signal from the A/T control unit used with OBD-related parts of the A/T system. The signal is sent to the ECM when a malfunction occurs in the corresponding OBD-related part. The other function is to indicate a diagnostic result by means of the MIL (malfunction indicator lamp) on the instrument panel. Sensors, switches and solenoid valves are used as sensing elements.
The MIL automatically illuminates in One or Two Trip Detection Logic when a malfunction is sensed in relation to A/T system parts.

One or Two Trip Detection Logic

ONE TRIP DETECTION LOGIC

If a malfunction is sensed during the first test drive, the MIL will illuminate and the malfunction will be stored in the ECM memory as a DTC. The A/T control unit is not provided with such a memory function.

TWO TRIP DETECTION LOGIC

When a malfunction is sensed during the first test drive, it is stored in the ECM memory as a 1st trip DTC (diagnostic trouble code) or 1st trip freeze frame data. At this point, the MIL will not illuminate. — First Trip
If the same malfunction as that experienced during the first test drive is sensed during the second test drive, the MIL will illuminate. — Second Trip
A/T-related parts for which the MIL illuminates during the first or second test drive are listed below.

Items	MIL	
	One trip detection	Two trip detection
Shift solenoid valve A — DTC: P0750 (1108)	X	
Shift solenoid valve B — DTC: P0755 (1201)	X	
Throttle position sensor or switch — DTC: P1705 (1206)	X	
Except above		X

The "trip" in the "One or Two Trip Detection Logic" means a driving mode in which self-diagnosis is performed during vehicle operation.

Diagnostic Trouble Code (DTC)

HOW TO READ DTC

The diagnostic trouble code can be read by the following methods.
(Either code for the 1st trip or the 2nd trip can be read.)

NO TOOLS 1. The number of blinks of the malfunction indicator lamp in the Diagnostic Test Mode II (Self-Diagnostic Results) Examples: 1101, 1102, 1103, 1104, etc.
These DTCs are controlled by NISSAN.

2. CONSULT or GST (Generic Scan Tool) Examples: P0705, P0710, P0720, P0725, etc.
These DTCs are prescribed by SAE J2012. (CONSULT also displays the malfunctioning component or system.)

- **Output of a DTC indicates a malfunction. However, Mode II and GST do not indicate whether the malfunction is still occurring or has occurred in the past and has returned to normal. CONSULT can identify them. Therefore, using CONSULT (if available) is recommended.**

HOW TO ERASE DTC

The diagnostic trouble code can be erased by CONSULT, GST or ECM DIAGNOSTIC TEST MODE as described following.

- **If the battery terminal is disconnected, the diagnostic trouble code will be lost within 24 hours.**
- **When you erase the DTC, using CONSULT or GST is easier and quicker than switching the mode selector on the ECM.**

The following emission-related diagnostic information is cleared from the ECM memory when erasing DTC related to OBD-II. For details, refer to EC section "Emission-related Diagnostic Information", "ON BOARD DIAGNOSTIC SYSTEM DESCRIPTION".

- **Diagnostic trouble codes (DTC)**
- **1st trip diagnostic trouble codes (1st trip DTC)**
- **Freeze frame data**
- **1st trip freeze frame data**
- **System readiness test (SRT) codes**
- **Test values**

HOW TO ERASE DTC (With CONSULT)

- **If a DTC is displayed for both ECM and A/T control unit, it needs to be erased for both ECM and A/T control unit.**
- **If diagnostic trouble code is not for A/T related items (Refer to AT-46), skip steps 2 through 4.**

1. If the ignition switch stays "ON" after repair work, be sure to turn ignition switch "OFF" once. Wait for at least 5 seconds and then turn it "ON" (engine stopped) again.
2. Turn CONSULT "ON" and touch "A/T".
3. Touch "SELF-DIAG RESULTS".
4. Touch "ERASE". (The DTC in the A/T control unit will be erased.) Then touch "BACK" twice.
5. Touch "ENGINE".
6. Touch "SELF-DIAG RESULTS".
7. Touch "ERASE". (The DTC in the ECM will be erased.)

How to erase DTC (With CONSULT)

1. If the ignition switch stays "ON" after repair work, be sure to turn ignition switch "OFF" once. Wait at least 5 seconds and then turn it "ON" (engine stopped) again.

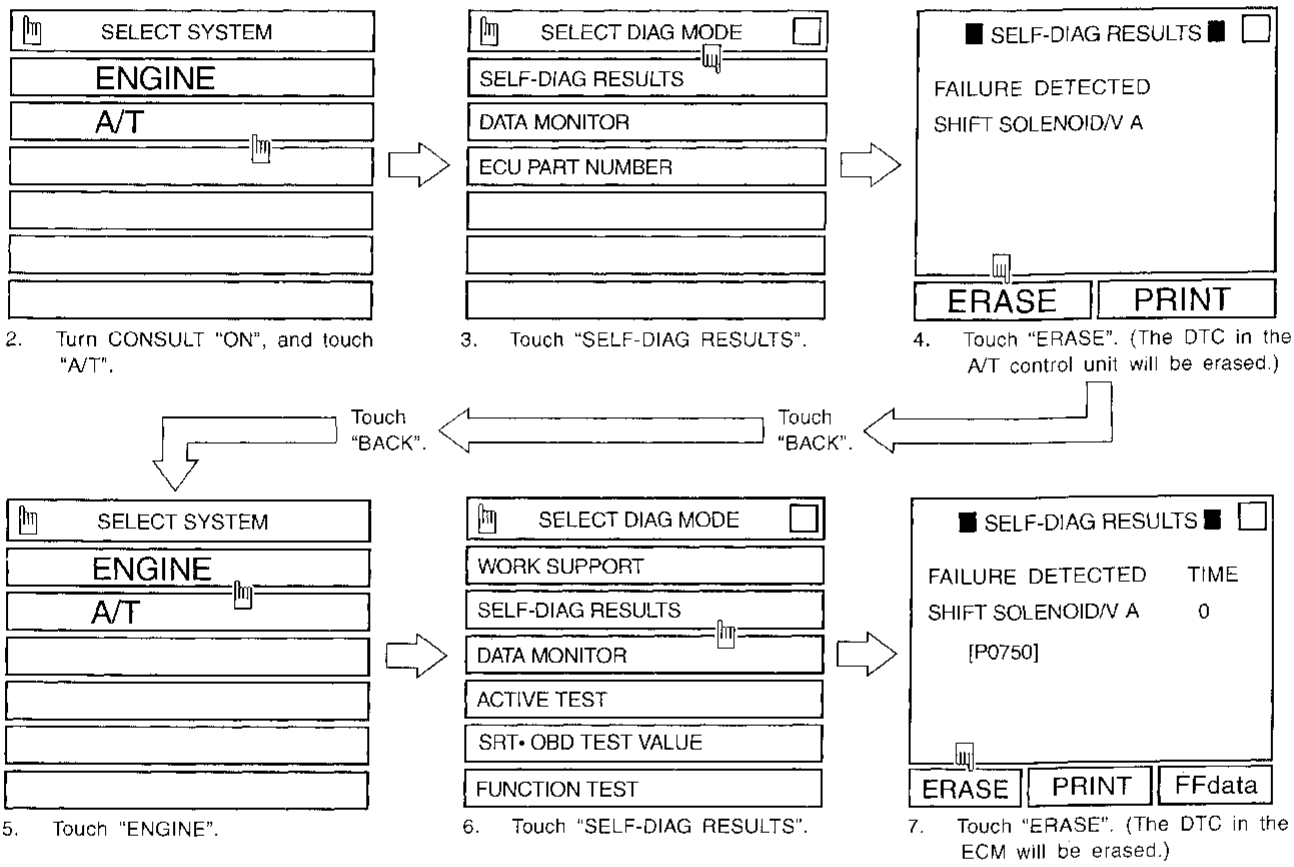

2. Turn CONSULT "ON", and touch "A/T".
3. Touch "SELF-DIAG RESULTS".
4. Touch "ERASE". (The DTC in the A/T control unit will be erased.)
5. Touch "ENGINE".
6. Touch "SELF-DIAG RESULTS".
7. Touch "ERASE". (The DTC in the ECM will be erased.)

SEF372S

HOW TO ERASE DTC (With GST)

1. If the ignition switch stays "ON" after repair work, be sure to turn ignition switch "OFF" once. Wait for at least 5 seconds and then turn it "ON" (engine stopped) again.
2. Perform "SELF-DIAGNOSTIC PROCEDURE (No Tools)". Refer to AT-23. (The engine warm-up step can be skipped when performing the diagnosis only to erase the DTC.)
3. Select Mode 4 with Generic Scan Tool (GST). For details, refer to EC section ("Generic Scan Tool (GST)", "ON BOARD DIAGNOSTIC SYSTEM DESCRIPTION").

HOW TO ERASE DTC (No Tools)

1. If the ignition switch stays "ON" after repair work, be sure to turn ignition switch "OFF" once. Wait for at least 5 seconds and then turn it "ON" (engine stopped) again.
2. Perform "SELF-DIAGNOSTIC PROCEDURE (No Tools)". Refer to AT-23. (The engine warm-up step can be skipped when performing the diagnosis only to erase the DTC.)
3. Change the diagnostic test mode from Mode II to Mode I by turning the mode selector on the ECM. Refer to EC section ["HOW TO SWITCH DIAGNOSTIC TEST MODES", "Malfunction Indicator Lamp (MIL)", "ON BOARD DIAGNOSTIC SYSTEM DESCRIPTION"].

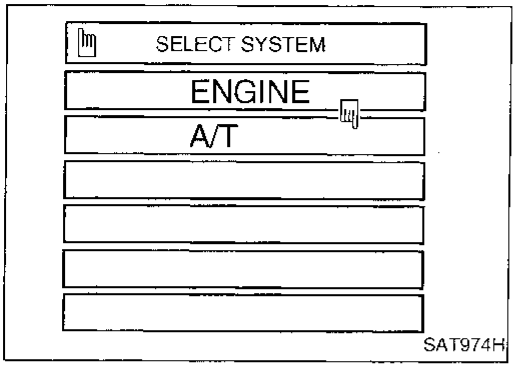

Self-diagnosis

After performing this procedure, place check marks for results on the "DIAGNOSTIC WORKSHEET", AT-32. Reference pages are provided following the items.

SELF-DIAGNOSTIC PROCEDURE (With CONSULT)

1. Turn on CONSULT and touch "A/T".
   If A/T is not displayed, check A/T control unit power supply and ground circuit. Refer to AT-51. If result is NG, refer to EL section ("POWER SUPPLY ROUTING").

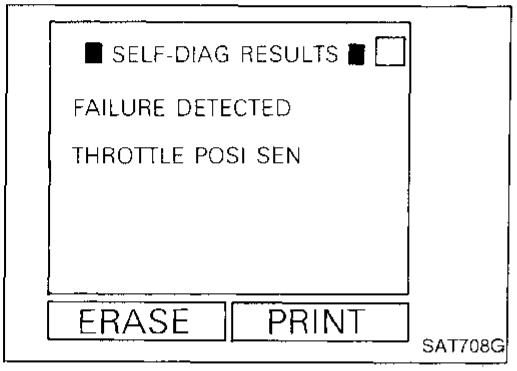

2. Touch "SELF-DIAG RESULTS".
   Display shows malfunction experienced since the last erasing operation.
   CONSULT performs REAL-TIME SELF-DIAGNOSIS.
   Also, any malfunction detected while in this mode will be displayed at real time.

Detected items (Screen terms for CONSULT, "SELF-DIAG RESULTS" test mode)	Malfunction is detected when ...	Indicator for Diagnostic Results	
		O/D OFF indicator lamp (Available when "A/T" on CONSULT is touched.)	CHECK Malfunction indicator lamp*2 (Available when "ENGINE" on CONSULT is touched.)
Inhibitor switch circuit (INHIBITOR SWITCH)	• A/T control unit does not receive the correct voltage signal (based on the gear position) from the switch.	—	X
Revolution sensor (VHCL SPEED SEN·A/T)	• A/T control unit does not receive the proper voltage signal from the sensor.	X	X
Vehicle speed sensor (Meter) (VHCL SPEED SEN·MTR)	• A/T control unit does not receive the proper voltage signal from the sensor.	X	—
Improper shifting to 1st gear position (A/T 1ST SIGNAL)	• A/T cannot be shifted to the 1st gear position even if electrical circuit is good.	—	X*1
Improper shifting to 2nd gear position (A/T 2ND SIGNAL)	• A/T cannot be shifted to the 2nd gear position even if electrical circuit is good.	—	X*1
Improper shifting to 3rd gear position (A/T 3RD SIGNAL)	• A/T cannot be shifted to the 3rd gear position even if electrical circuit is good.	—	X*1
Improper shifting to 4th gear position (A/T 4TH SIG OR TCC)	• A/T cannot be shifted to the 4th gear position even if electrical circuit is good.	—	X*1
Improper lock-up operation (A/T TCC SIGNAL)	• A/T cannot perform lock-up even if electrical circuit is good.	—	X*1
Shift solenoid valve A (SHIFT SOLENOID/V A)	• A/T control unit detects an improper voltage drop when it tries to operate the solenoid valve.	X	X
Shift solenoid valve B (SHIFT SOLENOID/V B)	• A/T control unit detects an improper voltage drop when it tries to operate the solenoid valve.	X	X
Overrun clutch solenoid valve (OVERRUN CLUTCH S/V)	• A/T control unit detects an improper voltage drop when it tries to operate the solenoid valve.	X	X
T/C clutch solenoid valve (TOR CONV CLUTCH SV)	• A/T control unit detects an improper voltage drop when it tries to operate the solenoid valve.	X	X
Line pressure solenoid valve (LINE PRESSURE S/V)	• A/T control unit detects an improper voltage drop when it tries to operate the solenoid valve.	X	X
Throttle position sensor Throttle position switch (THRTL POSI SEN·A/T)	• A/T control unit receives an excessively low or high voltage from the sensor.	X	X
Engine speed signal (ENGINE SPEED SIG)	• A/T control unit does not receive the proper voltage signal from the ECM.	X	X

Self-diagnosis (Cont'd)

Detected items (Screen terms for CONSULT, "SELF-DIAG RESULTS" test mode)	Malfunction is detected when ...	Indicator for Diagnostic Results	
		O/D OFF indicator lamp (Available when "A/T" on CONSULT is touched.)	Malfunction indicator lamp*2 (Available when "ENGINE" on CONSULT is touched.)
A/T fluid temperature sensor (A/T FLUID TEMP SENSOR)	• A/T control unit receives an excessively low or high voltage from the sensor.	X	X
Initial start INITIAL START	• This is not a malfunction message (Whenever shutting off a power supply to the control unit, this message appears on the screen.)	X	—
No failure (NO SELF DIAGNOSTIC FAILURE INDICATED FURTHER TESTING MAY BE REQUIRED**)	• No failure has been detected.	X	X

X : Applicable
— : Not applicable
*1 : These malfunctions can not be displayed by MIL if another malfunction is assigned to the O/D OFF indicator lamp.
*2 : Refer to EC section ["Malfunction Indicator Lamp (MIL)", "ON BOARD DIAGNOSTIC SYSTEM DESCRIPTION"].

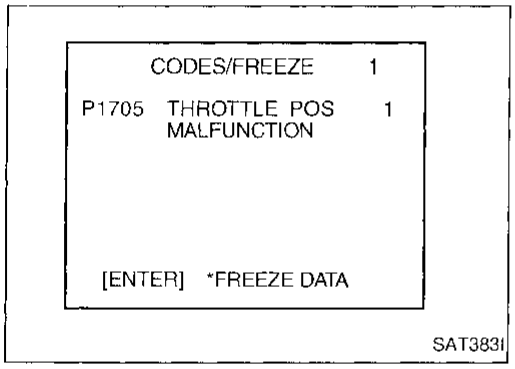

SELF-DIAGNOSTIC PROCEDURE (With GST)

Refer to EC section ["Generic Scan Tool (GST)", "ON BOARD DIAGNOSTIC SYSTEM DESCRIPTION"].

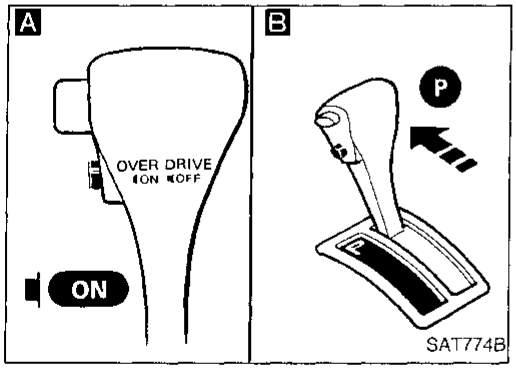

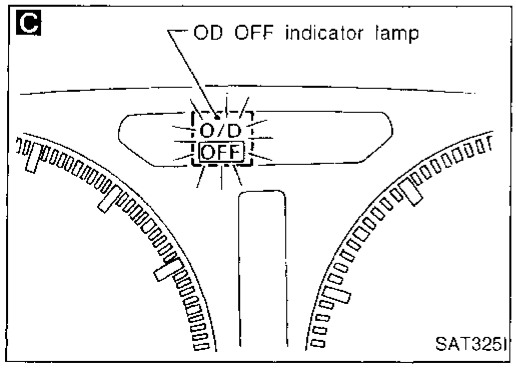

SELF-DIAGNOSTIC PROCEDURE (No Tools)

DIAGNOSIS START

A B C

1. Start engine and warm it up to normal engine operating temperature.
2. Turn ignition switch to "OFF" position. Wait for at least 5 seconds.
3. Turn ignition switch to "ACC" position.
4. Set overdrive control switch in "ON" position.
5. Move selector lever to "P" position.
6. Turn ignition switch to "ON" position. (Do not start engine.)
7. Does O/D OFF indicator lamp come on for about 2 seconds?

No → Go to "1. O/D OFF Indicator Lamp Does Not Come On", AT-104.

Yes → Ⓐ

Self-diagnosis (Cont'd)

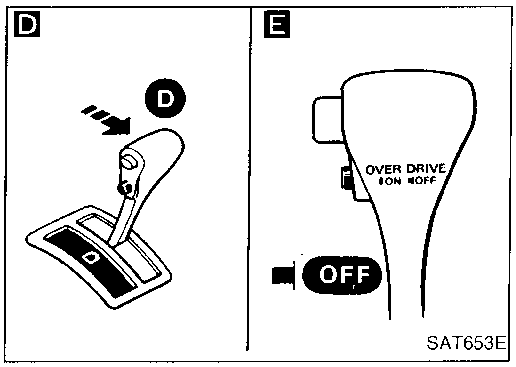

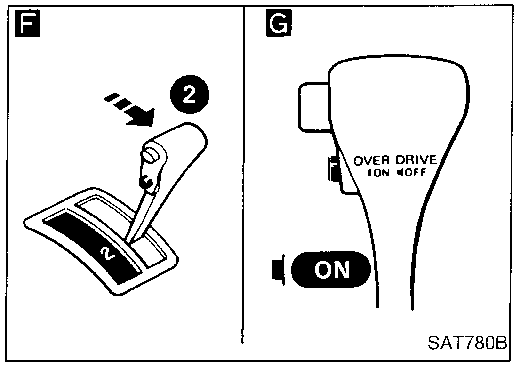

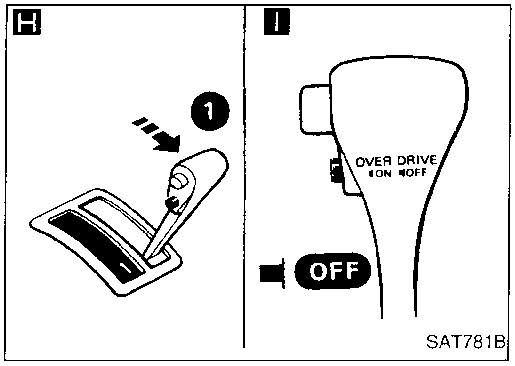

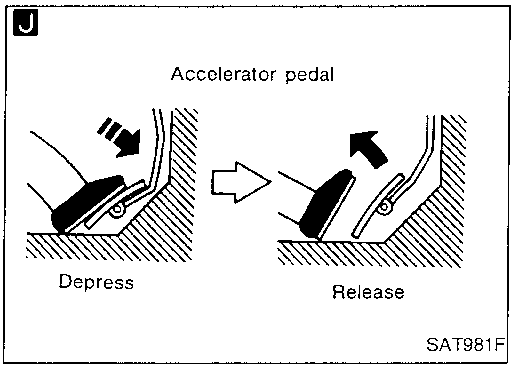

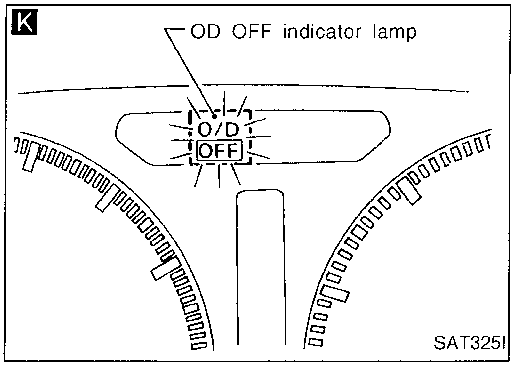

Ⓐ

D E

1. Turn ignition switch to "OFF" position.
2. Turn ignition switch to "ON" position (Do not start engine.)
3. Move selector lever to "D" position.
4. Turn ignition switch to "OFF" position.
5. Set overdrive control switch to "OFF" position.
6. Turn ignition switch to "ON" position (Do not start engine.)

- Wait for more than 2 seconds after ignition switch "ON".

F G

1. Move selector lever to "2" position.
2. Set overdrive control switch in "ON" position.

H I

Move selector lever to "1" position.
Set overdrive control switch in "OFF" position.

J

Depress accelerator pedal fully and release it.

K

Check O/D OFF indicator lamp.
Refer to JUDGEMENT OF SELF-DIAGNOSIS CODE on next page.

DIAGNOSIS END

Self-diagnosis (Cont'd)

JUDGEMENT OF SELF-DIAGNOSIS CODE

O/D OFF indicator lamp:

All judgement flickers are same.

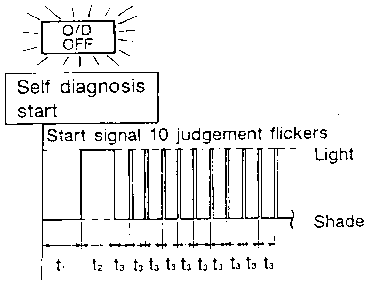

SAT436F

All circuits that can be confirmed by self-diagnosis are OK.

4th judgement flicker is longer than others.

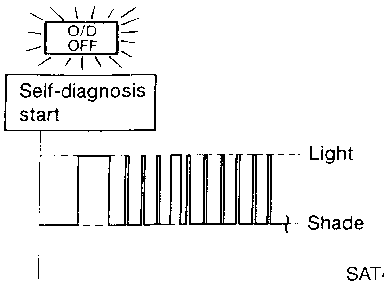

SAT443F

Shift solenoid valve A circuit is short-circuited or disconnected.

➡ **Go to SHIFT SOLENOID VALVE A (DTC: 1108), AT-91.**

1st judgement flicker is longer than others.

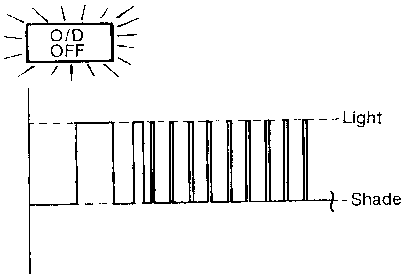

SAT437F

Revolution sensor circuit is short-circuited or disconnected.

➡ **Go to VEHICLE SPEED SENSOR·A/T (REVOLUTION SENSOR) (DTC: 1102), AT-64.**

5th judgement flicker is longer than others.

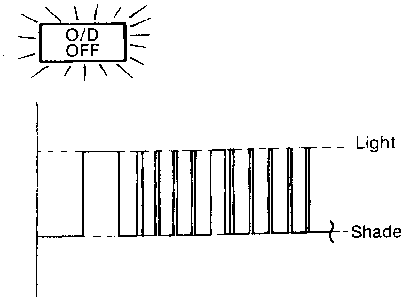

SAT445F

Shift solenoid valve B circuit is short-circuited or disconnected.

➡ **Go to SHIFT SOLENOID VALVE B (DTC: 1201), AT-94.**

2nd judgement flicker is longer than others.

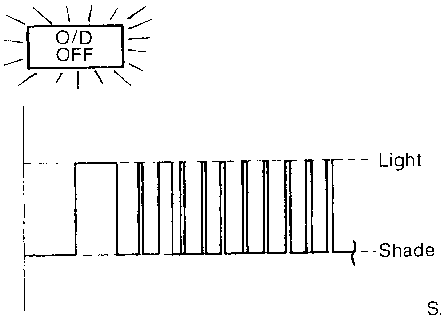

SAT439F

Vehicle speed sensor circuit is short-circuited or disconnected.

➡ **Go to VEHICLE SPEED SENSOR·MTR, AT-102.**

6th judgement flicker is longer than others.

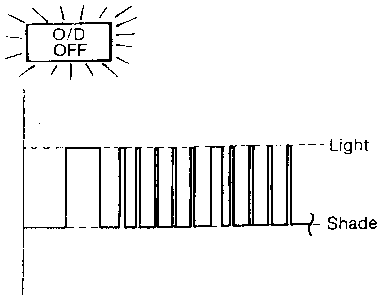

SAT447F

Overrun clutch solenoid valve circuit is short-circuited or disconnected.

➡ **Go to OVERRUN CLUTCH SOLENOID VALVE (DTC: 1203), AT-99.**

3rd judgement flicker is longer than others.

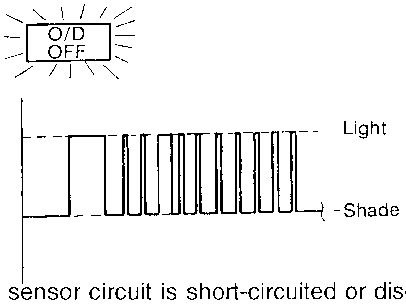

SAT441F

Throttle position sensor circuit is short-circuited or disconnected.

➡ **Go to THROTTLE POSITION SENSOR (DTC: 1206), AT-97.**

7th judgement flicker is longer than others.

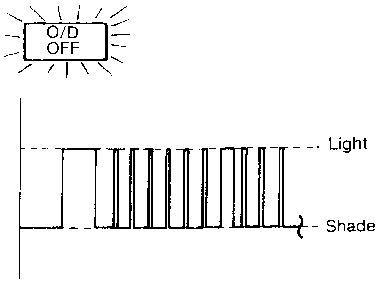

SAT449F

Torque converter clutch solenoid valve circuit is short-circuited or disconnected.

➡ **Go to TORQUE CONVERTER CLUTCH SOLENOID VALVE (DTC: 1204), AT-80.**

t_1 = 2.5 seconds t_2 = 2.0 seconds t_3 = 1.0 second

Self-diagnosis (Cont'd)

O/D OFF indicator lamp:	
8th judgement flicker is longer than others. 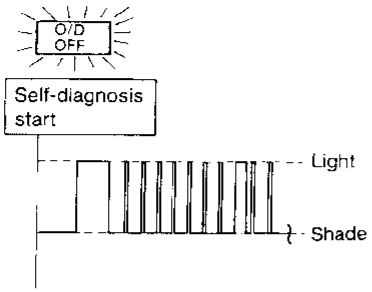 SAT451F A/T fluid temperature sensor is disconnected or A/T control unit power source circuit is damaged. ➡ **Go to A/T FLUID TEMPERATURE SENSOR AND A/T CONTROL UNIT POWER SOURCE (DTC: 1208), AT-61.**	Flickers as shown below. 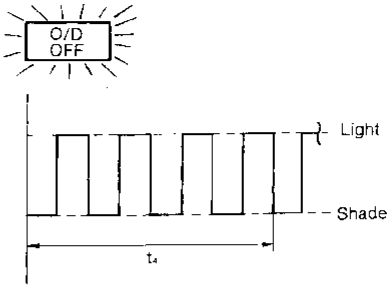 SAT457F Battery power is low. Battery has been disconnected for a long time. Battery is connected conversely. (When reconnecting A/T control unit connectors. — This is not a problem.)
9th judgement flicker is longer than others. 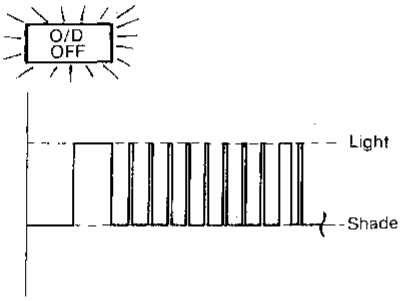 SAT453F Engine speed signal circuit is short-circuited or disconnected. ➡ **Go to ENGINE SPEED SIGNAL (DTC: 1207), AT-66.**	Does not come on. 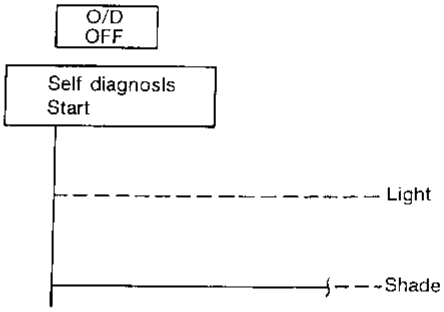 SAT414G Inhibitor switch, overdrive control switch or throttle position switch circuit is disconnected or A/T control unit is damaged. ➡ **Go to INHIBITOR, OVERDRIVE CONTROL AND THROTTLE POSITION SWITCHES (DTC: 1101), AT-55.**
10th judgement flicker is longer than others. 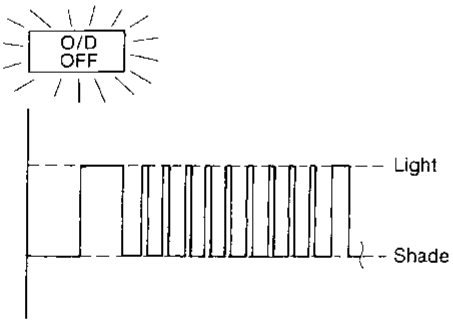 SAT455F Line pressure solenoid valve circuit is short-circuited or disconnected. ➡ **Go to LINE PRESSURE SOLENOID VALVE (DTC: 1205), AT-88.**	

t_4 = 1.0 second

Diagnosis by CONSULT

NOTICE

1. The CONSULT electrically displays shift timing and lock-up timing (that is, operation timing of each solenoid).
   Check for time difference between actual shift timing and the CONSULT display. If the difference is noticeable, mechanical parts (except solenoids, sensors, etc.) may be malfunctioning. Check mechanical parts using applicable diagnostic procedures.
2. Shift schedule (which implies gear position) displayed on CONSULT and that indicated in Service Manual may differ slightly. This occurs because of the following reasons:
   - Actual shift schedule has more or less tolerance or allowance,
   - Shift schedule indicated in Service Manual refers to the point where shifts start. Gear position displayed on CONSULT indicates the point where shifts are completed.
3. Shift solenoid valve "A" or "B" is displayed on CONSULT at the start of shifting. Gear position is displayed upon completion of shifting (which is computed by A/T control unit).
4. Additional CONSULT information can be found in the Operation Manual supplied with the CONSULT unit.

SELF-DIAGNOSTIC RESULT TEST MODE

Refer to AT-22.

DATA MONITOR DIAGNOSTIC TEST MODE

Item	Display	Monitor item		Description	Remarks
		ECU input signals	Main signals		
Vehicle speed sensor 1 (A/T) (Revolution sensor)	VHCL/S SE-A/T [km/h] or [mph]	X	—	• Vehicle speed computed from signal of revolution sensor is displayed.	When racing engine in "N" or "P" position with vehicle stationary, CONSULT data may not indicate 0 km/h (0 mph).
Vehicle speed sensor 2 (Meter)	VHCL/S SE-MTR [km/h] or [mph]	X	—	• Vehicle speed computed from signal of vehicle speed sensor is displayed.	Vehicle speed display may not be accurate under approx. 10 km/h (6 mph). It may not indicate 0 km/h (0 mph) when vehicle is stationary.
Throttle position sensor	THRTL POS SEN [V]	X	—	• Throttle position sensor signal voltage is displayed.	
A/T fluid temperature sensor	FLUID TEMP SEN [V]	X	—	• A/T fluid temperature sensor signal voltage is displayed. • Signal voltage lowers as fluid temperature rises.	
Battery voltage	BATTERY VOLT [V]	X	—	• Source voltage of control unit is displayed.	
Engine speed	ENGINE SPEED [rpm]	X	X	• Engine speed, computed from engine speed signal, is displayed.	Engine speed display may not be accurate under approx. 800 rpm. It may not indicate 0 rpm even when engine is not running.
Overdrive control switch	OVERDRIVE SW [ON/OFF]	X	—	• ON/OFF state computed from signal of overdrive control SW is displayed.	
P/N position switch	P/N POSI SW [ON/OFF]	X	—	• ON/OFF state computed from signal of P/N position SW is displayed.	
R position switch	R POSITION SW [ON/OFF]	X	—	• ON/OFF state computed from signal of R position SW is displayed.	
D position switch	D POSITION SW [ON/OFF]	X	—	• ON/OFF state computed from signal of D position SW is displayed.	
2 position switch	2 POSITION SW [ON/OFF]	X	—	• ON/OFF status, computed from signal of 2 position SW, is displayed.	

Diagnosis by CONSULT (Cont'd)

Item	Display	Monitor item		Description	Remarks
		ECU input signals	Main signals		
1 position switch	1 POSITION SW [ON/OFF]	X	—	• ON/OFF status, computed from signal of 1 position SW, is displayed.	
ASCD-cruise signal	ASCD-CRUISE [ON/OFF]	X	—	• Status of ASCD cruise signal is displayed. ON ... Cruising state OFF ... Normal running state	• This is displayed even when no ASCD is mounted.
ASCD-OD cut signal	ASCD-OD CUT [ON/OFF]	X	—	• Status of ASCD-OD release signal is displayed. ON ... OD released OFF ... OD not released	• This is displayed even when no ASCD is mounted.
Kickdown switch	KICKDOWN SW [ON/OFF]	X	—	• ON/OFF status, computed from signal of kickdown SW, is displayed.	• This is displayed even when no kickdown switch is equipped.
Closed throttle position switch	CLOSED THL/SW [ON/OFF]	X	—	• ON/OFF status, computed from signal of closed throttle position SW, is displayed.	
Wide open throttle position switch	W/O THRL/P-SW [ON/OFF]	X	—	• ON/OFF status, computed from signal of wide open throttle position SW, is displayed.	
Gear position	GEAR	—	X	• Gear position data used for computation by control unit, is displayed.	
Selector lever position	SLCT LVR POSI	—	X	• Selector lever position data, used for computation by control unit, is displayed.	• A specific value used for control is displayed if fail-safe is activated due to error.
Vehicle speed	VEHICLE SPEED [km/h] or [mph]	—	X	• Vehicle speed data, used for computation by control unit, is displayed.	
Throttle position	THROTTLE POSI [/8]	—	X	• Throttle position data, used for computation by control unit, is displayed.	• A specific value used for control is displayed if fail-safe is activated due to error.
Line pressure duty	LINE PRES DTY [%]	—	X	• Control value of line pressure solenoid valve, computed by control unit from each input signal, is displayed.	
Torque converter clutch solenoid valve duty	TCC S/V DUTY [%]	—	X	• Control value of torque converter clutch solenoid valve, computed by control unit from each input signal, is displayed.	
Shift solenoid valve A	SHIFT S/V A [ON/OFF]	—	X	• Control value of shift solenoid valve A, computed by control unit from each input signal, is displayed.	Control value of solenoid is displayed even if solenoid circuit is disconnected. The "OFF" signal is displayed if solenoid circuit is shorted.
Shift solenoid valve B	SHIFT S/V B [ON/OFF]	—	X	• Control value of shift solenoid valve B, computed by control unit from each input signal, is displayed.	
Overrun clutch solenoid valve	OVERRUN/C S/V [ON/OFF]	—	X	• Control value of overrun clutch solenoid valve computed by control unit from each input signal is displayed.	
Self-diagnosis display lamp (O/D OFF indicator lamp)	SELF-D DP LMP [ON/OFF]	—	X	• Control status of O/D OFF indicator lamp is displayed.	

X: Applicable
—: Not applicable

DATA ANALYSIS

Item	Display form	Meaning
Torque converter clutch solenoid valve duty	Approximately 4% ↓ Approximately 94%	Lock-up "OFF" ↓ Lock-up "ON"
Line pressure solenoid valve duty	Approximately 0% ↓ Approximately 95%	Low line-pressure (Small throttle opening) ↓ High line-pressure (Large throttle opening)
Throttle position sensor	Approximately 0.5V	Fully-closed throttle
	Approximately 4V	Fully-open throttle
A/T fluid temperature sensor	Approximately 1.5V ↓ Approximately 0.5V	Cold [20°C (68°F)] ↓ Hot [80°C (176°F)]

Gear position	1	2	3	4
Shift solenoid valve A	ON	OFF	OFF	ON
Shift solenoid valve B	ON	ON	OFF	OFF

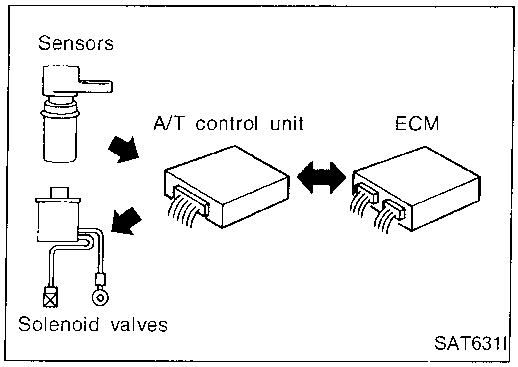

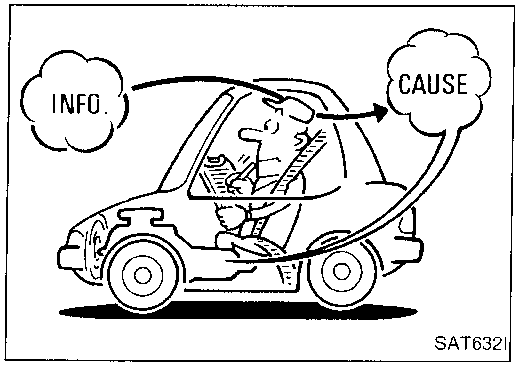

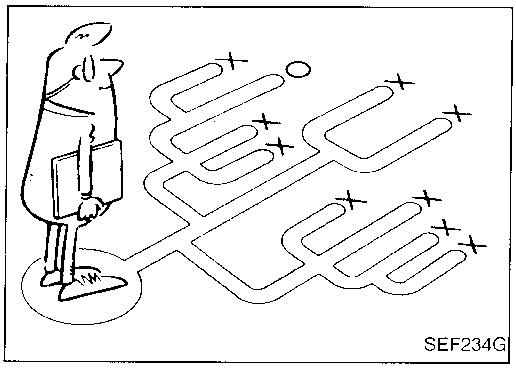

Introduction

The A/T control unit receives a signal from the vehicle-speed sensor, throttle position sensor or inhibitor switch and provides shift control or lock-up control via A/T unit solenoid valves.

The A/T control unit also communicates with the ECM by means of a signal sent from sensing elements used with the OBD-related parts of the A/T system for malfunction-diagnostic purposes. The A/T control unit is capable of diagnosing malfunctioning parts while the ECM can store malfunctions in its memory.

Input and output signals must always be correct and stable in the operation of the A/T system. The A/T system must be in good operating condition and be free of valve seizure, solenoid valve malfunction, etc.

It is much more difficult to diagnose a problem that occurs intermittently rather than continuously. Most intermittent problems are caused by poor electric connections or improper wiring. In this case, careful checking of suspected circuits may help prevent the replacement of good parts.

A visual check only may not find the cause of the problems. A road test with CONSULT (or GST) or a circuit tester connected should be performed. Follow the "Work Flow". Refer to AT-34.

Before undertaking actual checks, take a few minutes to talk with a customer who approaches with a driveability complaint. The customer can supply good information about such problems, especially intermittent ones. Find out what symptoms are present and under what conditions they occur. A "Diagnostic Worksheet" like the example (AT-32) should be used.

Start your diagnosis by looking for "conventional" problems first. This will help troubleshoot driveability problems on an electronically controlled engine vehicle.

Diagnostic Worksheet

INFORMATION FROM CUSTOMER

KEY POINTS

WHAT ..... Vehicle & A/T model
WHEN ..... Date, Frequencies
WHERE ..... Road conditions
HOW ..... Operating conditions, Symptoms

Customer name MR/MS	Model & Year	VIN
Trans. model RE4R01A	Engine VG33E	Mileage
Incident Date	Manuf. Date	In Service Date
Frequency	☐ Continuous ☐ Intermittent (times a day)	
Symptoms	☐ Vehicle does not move. (☐ Any position ☐ Particular position)	
	☐ No up-shift (☐ 1st → 2nd ☐ 2nd → 3rd ☐ 3rd → O/D)	
	☐ No down-shift (☐ O/D → 3rd ☐ 3rd → 2nd ☐ 2nd → 1st)	
	☐ Lockup malfunction	
	☐ Shift point too high or too low.	
	☐ Shift shock or slip (☐ N → D ☐ Lockup ☐ Any drive position)	
	☐ Noise or vibration	
	☐ No kickdown	
	☐ No pattern select	
	☐ Others ( )	
O/D OFF indicator lamp	Blinks for about 8 seconds.	
	☐ Continuously lit	☐ Not lit
Malfunction indicator lamp (MIL)	☐ Continuously lit	☐ Not lit

DIAGNOSTIC WORKSHEET

1.	☐ Read the Fail-safe and listen to customer complaints.	AT-5
2.	☐ CHECK A/T FLUID ☐ Leakage (Follow specified procedure) ☐ Fluid condition ☐ Fluid level	AT-35
3.	☐ Perform all ROAD TEST and mark required procedures.	AT-35
	3-1. Check before engine is started. ☐ SELF-DIAGNOSTIC PROCEDURE — Mark detected items. ☐ Inhibitor, overdrive control and throttle position switches, AT-55. ☐ A/T fluid temperature sensor and A/T control unit power source, AT-61. ☐ Vehicle speed sensor·A/T (Revolution sensor), AT-64. ☐ Engine speed signal, AT-66. ☐ Torque converter clutch solenoid valve, AT-80. ☐ Line pressure solenoid valve, AT-88. ☐ Shift solenoid valve A, AT-91. ☐ Shift solenoid valve B, AT-94. ☐ Throttle position sensor, AT-97. ☐ Overrun clutch solenoid valve, AT-99. ☐ Vehicle speed sensor·MTR, AT-102. ☐ Battery ☐ Others	AT-36
	3-2. Check at idle ☐ 1. O/D OFF Indicator Lamp Does Not Come On, AT-104. ☐ 2. Engine Cannot Be Started In "P" And "N" Position, AT-105. ☐ 3. In "P" Position, Vehicle Moves Forward Or Backward When Pushed, AT-105. ☐ 4. In "N" Position, Vehicle Moves, AT-106. ☐ 5. Large Shock. "N" → "R" Position, AT-107. ☐ 6. Vehicle Does Not Creep Backward In "R" Position, AT-108. ☐ 7. Vehicle Does Not Creep Forward In "D", "2" Or "1" Position, AT-109.	AT-37
	3-3. Cruise test Part-1 ☐ 8. Vehicle Cannot Be Started From D_1, AT-110. ☐ 9. A/T Does Not Shift: $D_1 \rightarrow D_2$ Or Does Not Kickdown: $D_4 \rightarrow D_2$, AT-111. ☐ 10. A/T Does Not Shift: $D_2 \rightarrow D_3$, AT-112. ☐ 11. A/T Does Not Shift: $D_3 \rightarrow D_4$, AT-113. ☐ 12. A/T Does Not Perform Lock-up, AT-114. ☐ 13. A/T Does Not Hold Lock-up Condition, AT-115. ☐ 14. Lock-up Is Not Released, AT-115. ☐ 15. Engine Speed Does Not Return To Idle (Light Braking $D_4 \rightarrow D_3$), AT-116.	AT-38, AT-41

Diagnostic Worksheet (Cont'd)

3.	Part-2 ☐ 16. Vehicle Does Not Start From D_1, AT-117. ☐ 9. A/T Does Not Shift: $D_1 \rightarrow D_2$ Or Does Not Kickdown: $D_4 \rightarrow D_2$, AT-111. ☐ 10. A/T Does Not Shift: $D_2 \rightarrow D_3$, AT-112. ☐ 11. A/T Does Not Shift: $D_3 \rightarrow D_4$, AT-113.	AT-43
	Part-3 ☐ 17. A/T Does Not Shift: $D_4 \rightarrow D_3$ When Overdrive Control Switch "ON" → "OFF", AT-117 ☐ 15. Engine Speed Does Not Return To Idle (Engine Brake In D_3), AT-116. ☐ 18. A/T Does Not Shift: $D_3 \rightarrow 2_2$, When Selector Lever "D" → "2" Position, AT-118. ☐ 15. Engine Speed Does Not Return To Idle (Engine Brake In 2_2), AT-116. ☐ 19. A/T Does Not Shift: $2_2 \rightarrow 1_1$, When Selector Lever "2" → "1" Position, AT-118. ☐ 20. Vehicle Does Not Decelerate By Engine Brake, AT-119. ☐ SELF-DIAGNOSTIC PROCEDURE — Mark detected items. ☐ Inhibitor, overdrive control and throttle position switches, AT-55. ☐ A/T fluid temperature sensor and A/T control unit power source, AT-61. ☐ Vehicle speed sensor·A/T (Revolution sensor), AT-64. ☐ Engine speed signal, AT-66. ☐ Torque converter clutch solenoid valve, AT-80. ☐ Line pressure solenoid valve, AT-88. ☐ Shift solenoid valve A, AT-91. ☐ Shift solenoid valve B, AT-94. ☐ Throttle position sensor, AT-97. ☐ Overrun clutch solenoid valve, AT-99. ☐ Vehicle speed sensor·MTR, AT-102. ☐ Battery ☐ Others	AT-44
4.	☐ For self-diagnosis NG items, inspect each component. Repair or replace the damaged parts.	AT-22
5.	☐ Perform all ROAD TEST and re-mark required procedures.	AT-35
6.	☐ Perform SELF-DIAGNOSIS for following MIL indicating items and check out NG items. Refer to EC section ["Emission-related Diagnostic Information", "ON BOARD DIAGNOSTIC SYSTEM DESCRIPTION]. ☐ DTC (P0731, 1103) Improper shifting to 1st gear position, AT-68. ☐ DTC (P0732, 1104) Improper shifting to 2nd gear position, AT-71. ☐ DTC (P0733, 1105) Improper shifting to 3rd gear position, AT-73. ☐ DTC (P0734, 1106) Improper shifting to 4th gear position, AT-75. ☐ DTC (P0744, 1107) Improper lock-up operation, AT-83.	EC section
7.	☐ Perform the Diagnostic Procedures for all remaining items marked NG. Repair or replace the damaged parts. Refer to the Symptom Chart when you perform the procedures. (The chart also shows some other possible symptoms and the component inspection orders.)	AT-51 AT-48
8.	☐ Erase DTC from A/T control unit and ECM memories.	AT-20
9.	Perform FINAL CHECK. ☐ Stall test — Mark possible damaged components/others. ☐ Torque converter one-way clutch ☐ Reverse clutch ☐ Forward clutch ☐ Overrun clutch ☐ Forward one-way clutch ☐ Low & reverse brake ☐ Low one-way clutch ☐ Engine ☐ Line pressure is low ☐ Clutches and brakes except high clutch and brake band are OK ☐ Pressure test — Suspected parts:	AT-120

Work Flow

HOW TO PERFORM TROUBLE DIAGNOSES FOR QUICK AND ACCURATE REPAIR

A good understanding of the malfunction conditions can make troubleshooting faster and more accurate. In general, each customer feels differently about a problem. It is important to fully understand the symptoms or conditions for a customer complaint.
Make good use of the two sheets provided, "INFORMATION FROM CUSTOMER" and "DIAGNOSTIC WORKSHEET", to perform the best troubleshooting possible.

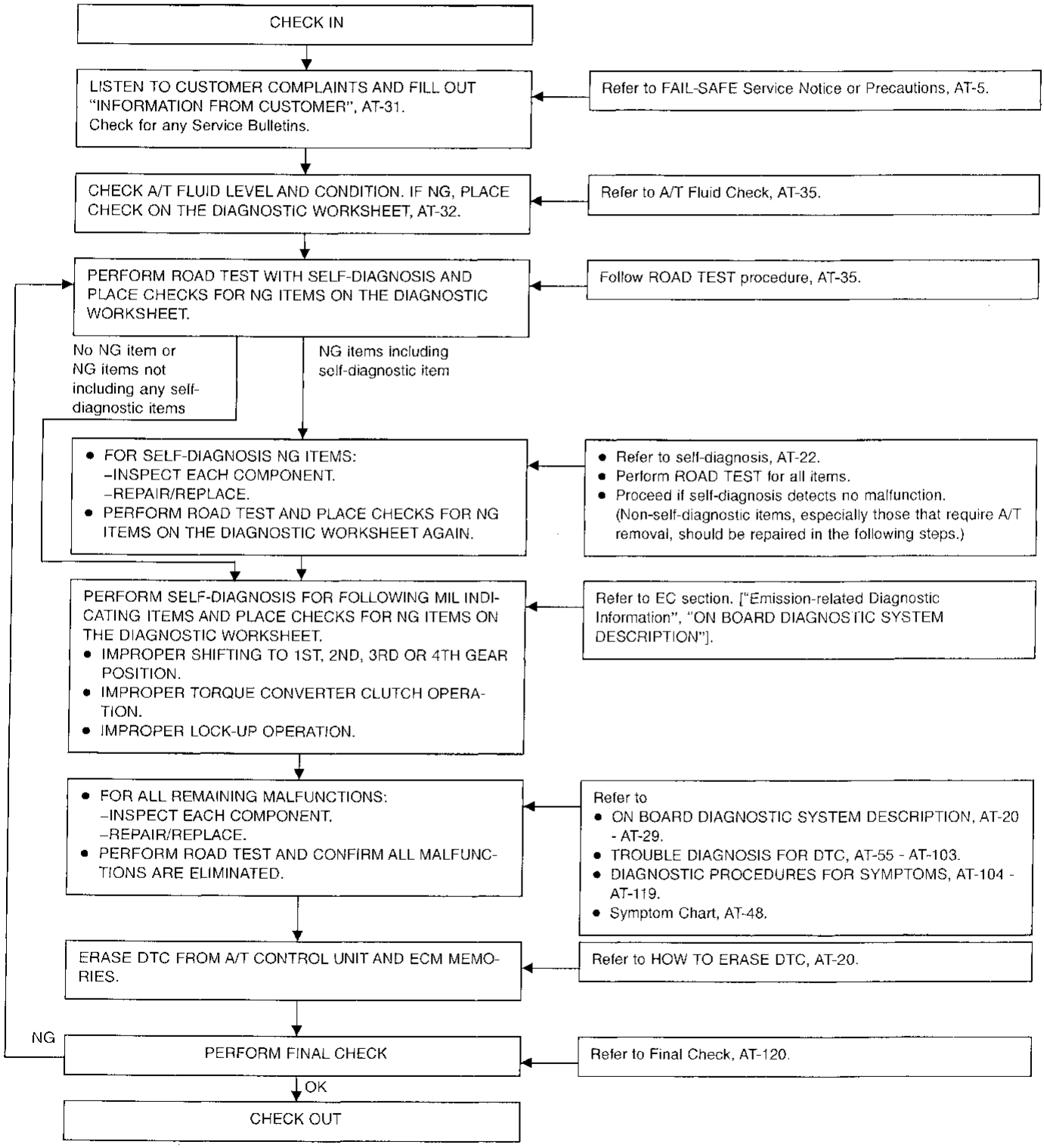

A/T Fluid Check

FLUID LEAKAGE CHECK

1. Clean area suspected of leaking. — for example, mating surface of converter housing and transmission case.
2. Start engine, apply foot brake, place selector lever in "D" position and wait a few minutes.
3. Stop engine.
4. Check for fresh leakage.

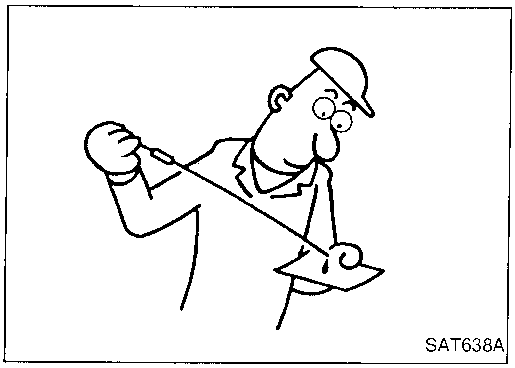
SAT638A

FLUID CONDITION CHECK

Fluid color	Suspected problem
Dark or black with burned odor	Wear of frictional material
Milky pink	Water contamination — Road water entering through filler tube or breather
Varnished fluid, light to dark brown and tacky	Oxidation — Over or under filling, — Overheating

FLUID LEVEL CHECK

Refer to MA section ("Checking A/T Fluid", "CHASSIS AND BODY MAINTENANCE").

ROAD TEST PROCEDURE

1. Check before engine is started.
⇩
2. Check at idle.
⇩
3. Cruise test.

SAT786A

Road Test

DESCRIPTION

- The purpose of the test is to determine overall performance of A/T and analyze causes of problems.
- The road test consists of the following three parts:

1. Check before engine is started
2. Check at idle
3. Cruise test

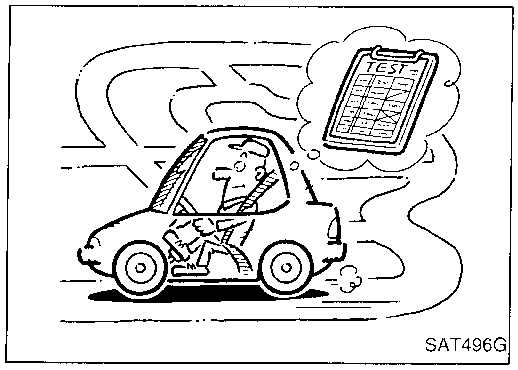

SAT496G

- Before road test, familiarize yourself with all test procedures and items to check.
- Conduct tests on all items until specified symptom is found. Troubleshoot items which check out No Good after road test. Refer to "ON BOARD DIAGNOSTIC SYSTEM DESCRIPTION" and "DIAGNOSTIC PROCEDURES FOR SYMPTOMS", AT-20 - AT-29 and AT-104 - AT-119.

Road Test (Cont'd)

1. CHECK BEFORE ENGINE IS STARTED

A

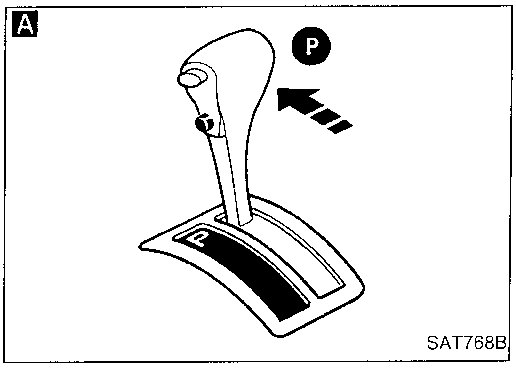

B C

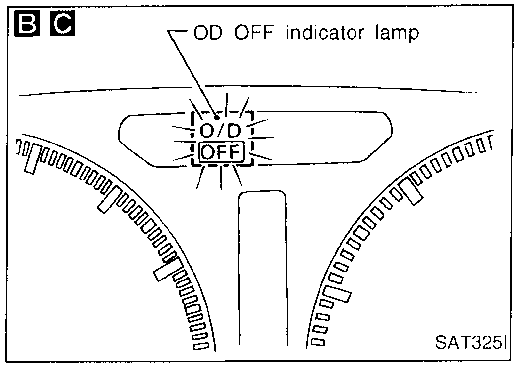

A B

1. Park vehicle on flat surface.
2. Turn ignition switch to "OFF" position.
3. Move selector lever to "P" position.
4. Set overdrive control switch to "ON" position.
5. Turn ignition switch to "ON" position. (Do not start engine.)
6. Does O/D OFF indicator lamp come on for about 2 seconds?

No → Go to "1. O/D OFF Indicator Lamp Does Not Come On", AT-104.

Yes ↓

C

Does O/D OFF indicator lamp flicker for about 8 seconds?

Yes → Perform self-diagnosis. Refer to SELF-DIAGNOSIS PROCEDURE, AT-22.

No ↓

1. Turn ignition switch to "OFF" position.
2. Perform self-diagnosis and note NG items.
   Refer to SELF-DIAGNOSIS PROCEDURE, AT-22.
3. Go to "2. Check at idle", AT-37.

Road Test (Cont'd)

2. CHECK AT IDLE

A

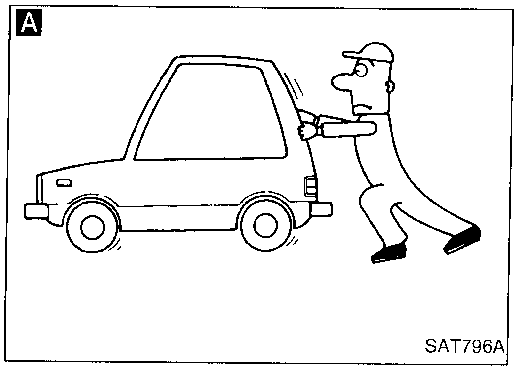

1. Park vehicle on flat surface.
2. Turn ignition switch to "OFF" position.
3. Move selector lever to "P" or "N" position.
4. Turn ignition switch to start position.
5. Is engine started?

No → Go to "2. Engine Cannot Be Started In "P" and "N" Position", AT-105.

Yes ↓

1. Turn ignition switch to "OFF" position.
2. Move selector lever to "D", "1", "2" or "R" position.
3. Turn ignition switch to start position.
4. Is engine started?

Yes → Go to "2. Engine Cannot Be Started In "P" and "N" Position", AT-105.

No ↓

B

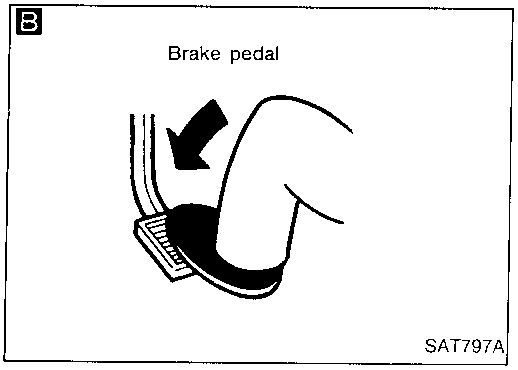

A

1. Turn ignition switch to "OFF" position.
2. Move selector lever to "P" position.
3. Release parking brake.
4. Push vehicle forward or backward.
5. Does vehicle move when it is pushed forward or backward?

Yes → Go to "3. In "P" Position, Vehicle Moves Forward Or Backward When Pushed", AT-105.

No ↓

1. Apply parking brake.
2. Move selector lever to "N" position.
3. Turn ignition switch to "START" position and start engine.
4. Release parking brake.
5. Does vehicle move forward or backward?

Yes → Go to "4. In "N" Position, Vehicle Moves", AT-106.

No ↓

B

1. Apply foot brake.
2. Move selector lever to "R" position.
3. Is there large shock when changing from "N" to "R" position?

Yes → Go to "5. Large Shock. "N" → "R" Position", AT-107.

No ↓

1. Release foot brake for several seconds.
2. Does vehicle creep backward when foot brake is released?

No → Go to "6. Vehicle Does Not Creep Backward In "R" Position", AT-108.

Yes ↓

1. Move selector lever to "D", "1" and "2" position and check if vehicle creeps forward.
2. Does vehicle creep forward in all three positions?

No → Go to "7. Vehicle Does Not Creep Forward In "D", "2" Or "1" Position", AT-109.

Yes ↓

Go to "3. Cruise test", AT-38.

Road Test (Cont'd)

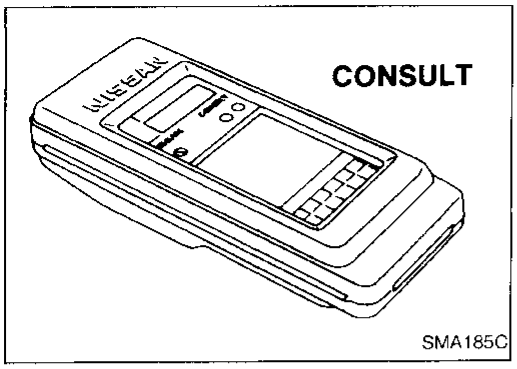

3. CRUISE TEST

- Check all items listed in Parts 1 through 3.

With CONSULT

- Using CONSULT, conduct a cruise test and record the result.
- Print the result and ensure that shifts and lock-ups take place as per "Shift Schedule".

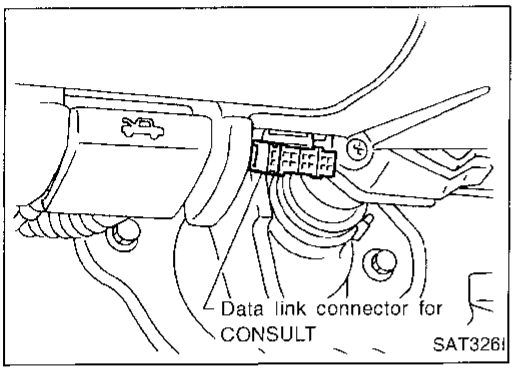

CONSULT setting procedure

1. Turn off ignition switch.
2. Connect "CONSULT" to Data link connector for CONSULT. Data link connector for CONSULT is located in instrument lower panel on driver side.

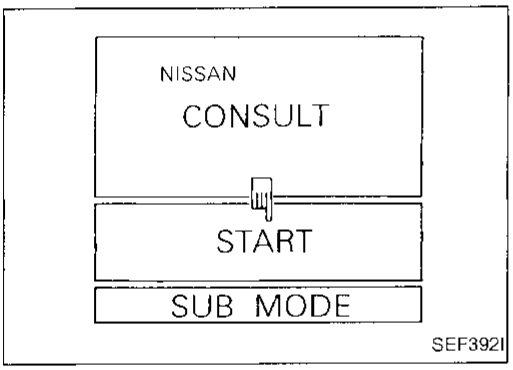

3. Turn on ignition switch.
4. Touch "START".

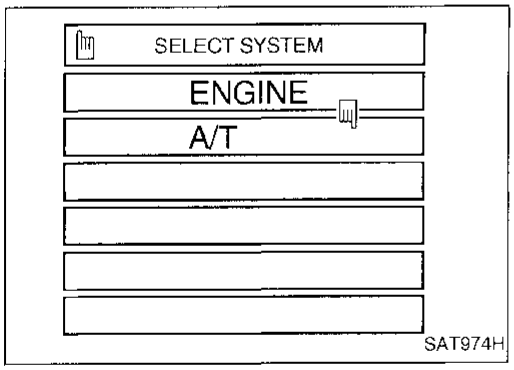

5. Touch "A/T".

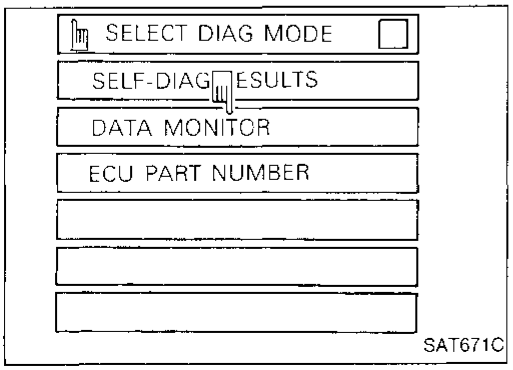

6. Touch "DATA MONITOR".

Road Test (Cont'd)

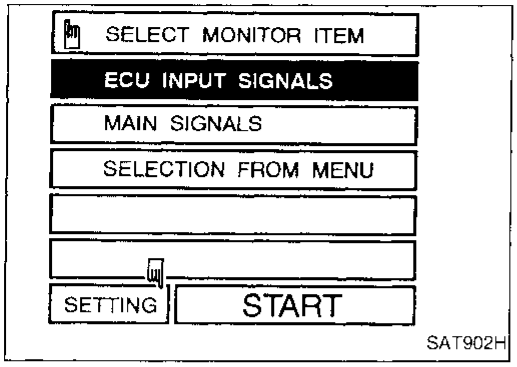

7. Touch "SETTING" to set recording condition.

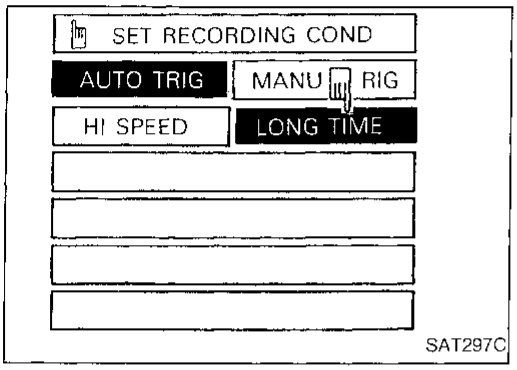

8. Touch "LONG TIME" and "ENTER" key.

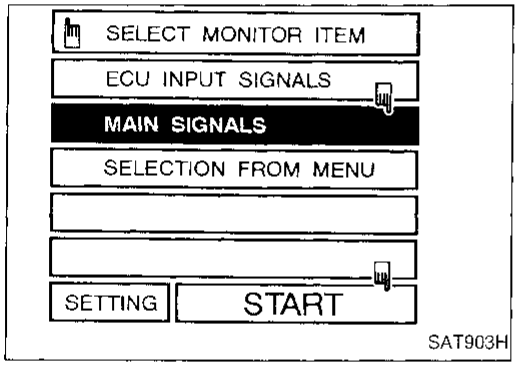

9. Go back to SELECT MONITOR ITEM and touch "MAIN SIGNALS".
10. Touch "START".

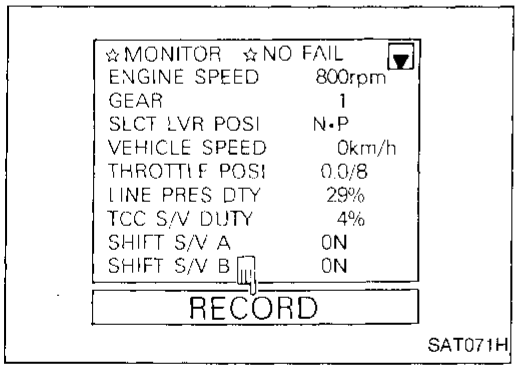

11. When performing cruise test, touch "RECORD".

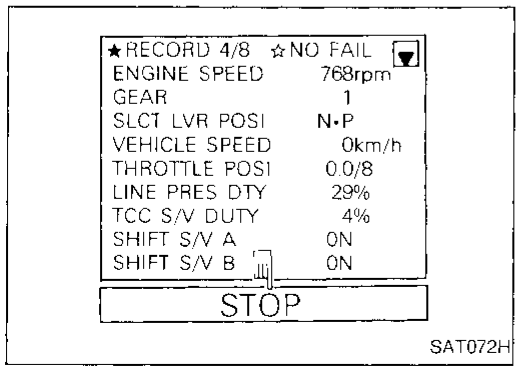

12. After finishing cruise test part 1, touch "STOP".

Road Test (Cont'd)

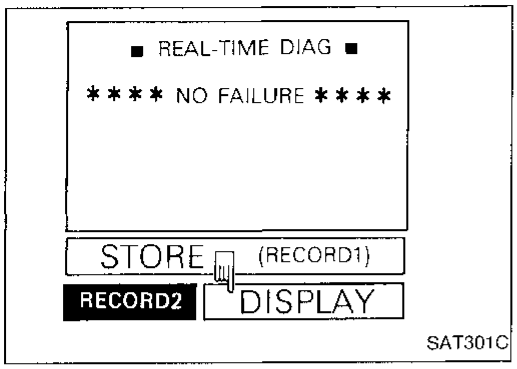

13. Touch "DISPLAY".

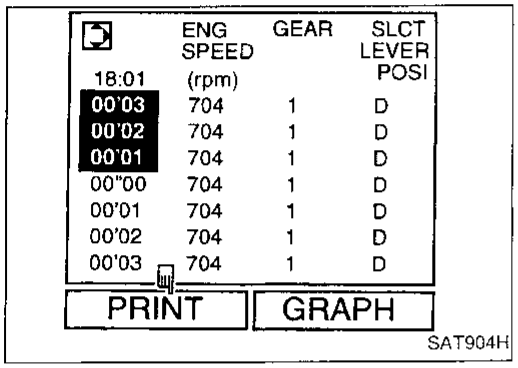

14. Touch "PRINT".

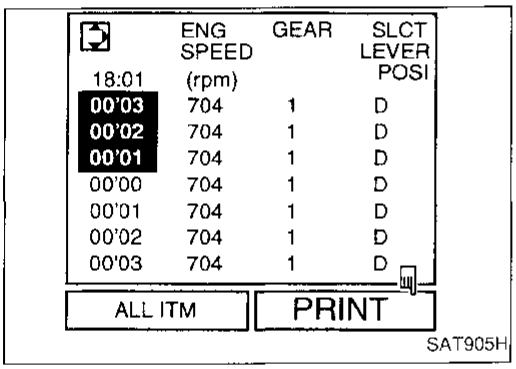

15. Touch "PRINT" again.

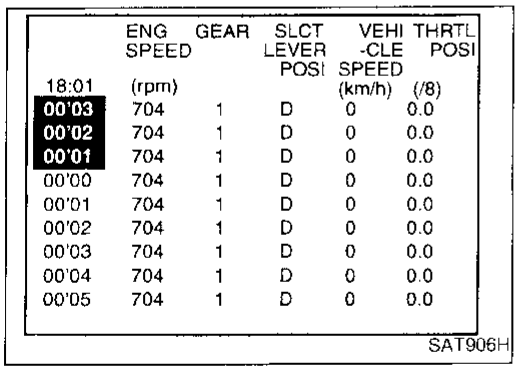

16. Check the monitor data printed out.
17. Continue cruise test part 2 and 3.

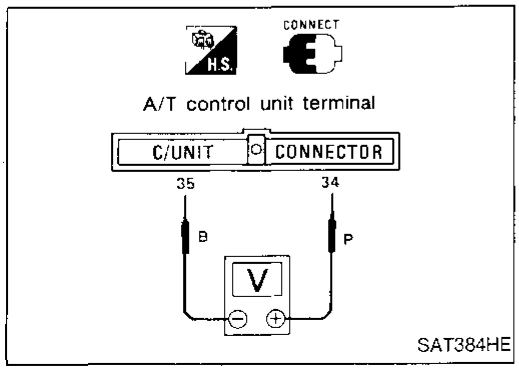

Without CONSULT

- Throttle position can be checked by voltage across terminals ㉞ and ㉟ of A/T control unit.

Road Test (Cont'd)

CRUISE TEST — Part 1

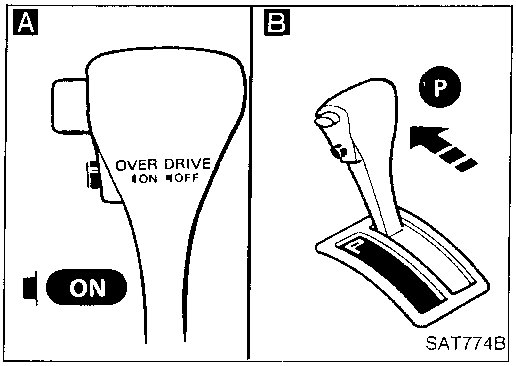

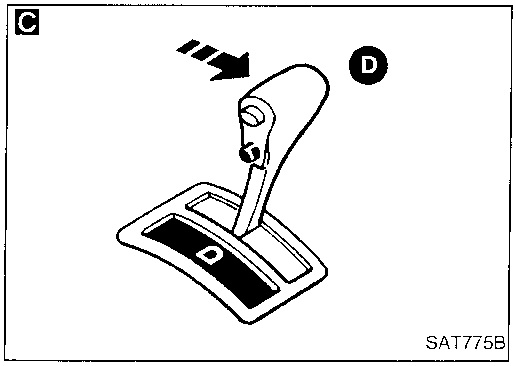

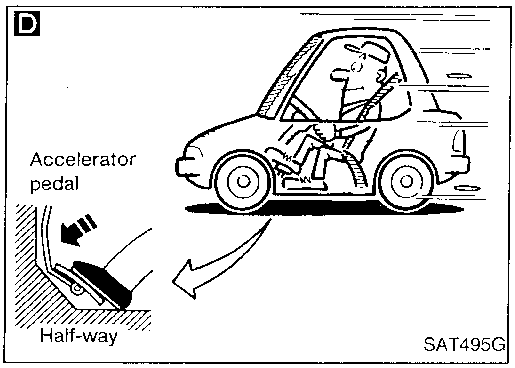

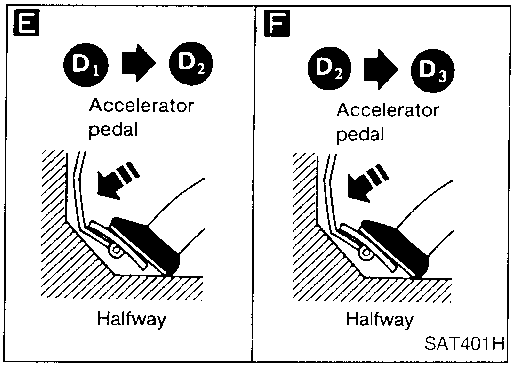

1. Drive vehicle for approx. 10 minutes to warm engine oil and ATF up to operating temperature.
   ATF operating temperature:
   50 - 80°C (122 - 176°F)

A B

1. Park vehicle on flat surface.
2. Set overdrive control switch to "ON" position.
3. Move selector lever to "P" position.
4. Start engine.

C

Move selector lever to "D" position.

D

Accelerate vehicle by constantly depressing accelerator pedal halfway.

Does vehicle start from D_1?
Read gear position.

No → Go to "8. Vehicle Cannot Be Started From D_1", AT-110.

Yes ↓

E

Does A/T shift from D_1 to D_2 at the specified speed?
Read gear position, throttle opening and vehicle speed.
Specified speed when shifting from D_1 to D_2:
Refer to Shift schedule, AT-45.

No → Go to "9. A/T Does Not Shift: $D_1 \rightarrow D_2$ Or Does Not Kickdown: $D_4 \rightarrow D_2$", AT-111.

Yes ↓

F

Does A/T shift from D_2 to D_3 at the specified speed?
Read gear position, throttle position and vehicle speed.
Specified speed when shifting from D_2 to D_3:
Refer to Shift schedule, AT-45.

No → Go to "10. A/T Does Not Shift: $D_2 \rightarrow D_3$", AT-112.

Yes ↓

Ⓐ

Road Test (Cont'd)

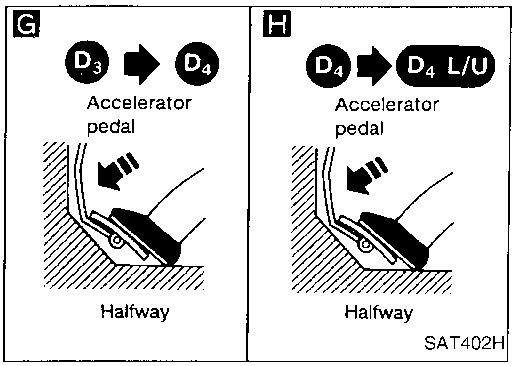

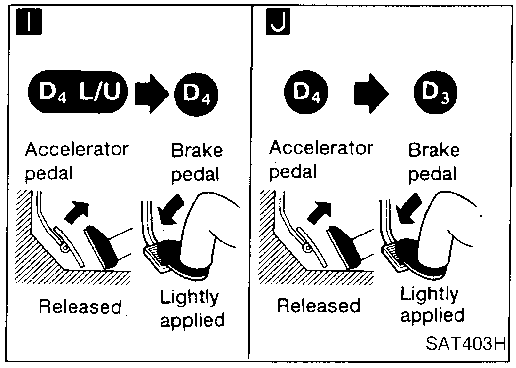

Ⓐ

G

Does A/T shift from D_3 to D_4 at the specified speed?

Read gear position, throttle position and vehicle speed.

Specified speed when shifting from D_3 to D_4:

Refer to Shift schedule, AT-45.

No → Go to "11. A/T Does Not Shift: $D_3 \rightarrow D_4$", AT-113.

Yes ↓

H

Does A/T perform lock-up at the specified speed?

Read vehicle speed, throttle position when lock-up duty becomes 94%.

Specified speed when lock-up occurs:

Refer to Shift schedule, AT-45.

No → Go to "12. A/T Does Not Perform Lock-up", AT-114.

Yes ↓

Does A/T hold lock-up condition for more than 30 seconds?

No → Go to "13. A/T Does Not Hold Lock-up Condition", AT-115.

Yes ↓

I

1. Release accelerator pedal.
2. Is lock-up released when accelerator pedal is released?

No → Go to "14. Lock-up Is Not Released", AT-115.

Yes ↓

J

1. Decelerate vehicle by applying foot brake lightly.
2. Does engine speed return to idle smoothly when A/T is shifted from D_4 to D_3?

Read gear position and engine speed.

No → Go to "15. Engine Speed Does Not Return To Idle (Light Braking $D_4 \rightarrow D_3$)", AT-116.

Yes ↓

1. Stop vehicle.
2. Go to "Cruise test — Part 2", AT-43.

Road Test (Cont'd)

CRUISE TEST — Part 2

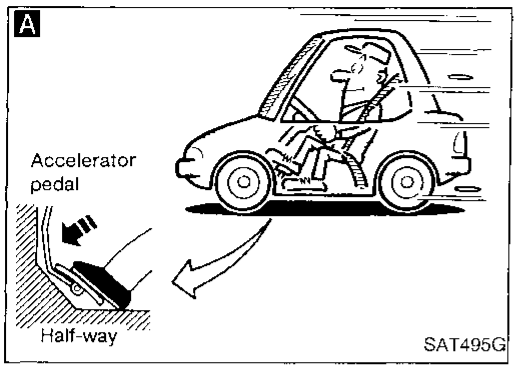

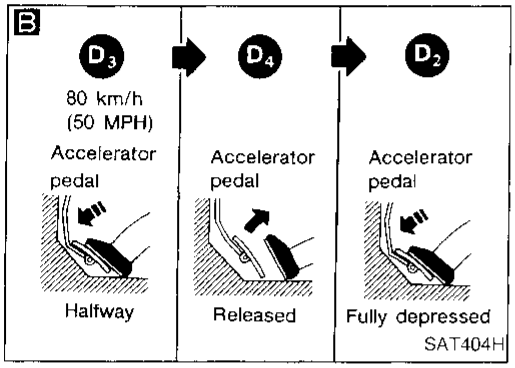

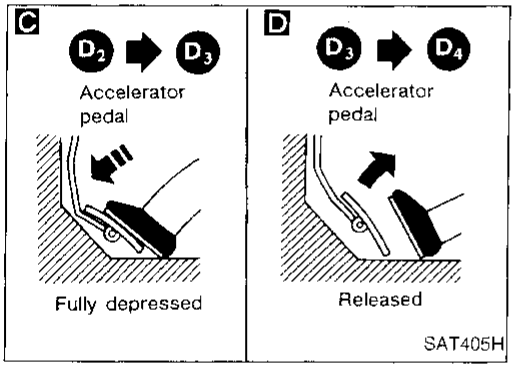

1. Confirm overdrive control switch is in "ON" position.
2. Confirm selector lever is in "D" position.

A

1. Accelerate vehicle by half throttle again.
2. Does vehicle start from D_1?

Read gear position.

No → Go to "16. Vehicle Does Not Start From D_1", AT-117.

Yes ↓

B

1. Accelerate vehicle to 80 km/h (50 MPH) as shown in illustration.
2. Release accelerator pedal and then quickly depress it fully.
3. Does A/T shift from D_4 to D_2 as soon as accelerator pedal is depressed fully?

Read gear position and throttle position.

No → Go to "9. A/T Does Not Shift: $D_1 \rightarrow D_2$ Or Does Not Kickdown: $D_4 \rightarrow D_2$", AT-111.

Yes ↓

C

Does A/T shift from D_2 to D_3 at the specified speed?

Read gear position, throttle position and vehicle speed.

Specified speed when shifting from D_2 to D_3:

Refer to Shift schedule, AT-45.

No → Go to "10. A/T Does Not Shift: $D_2 \rightarrow D_3$", AT-112.

Yes ↓

D

Release accelerator pedal after shifting from D_2 to D_3.
Does A/T shift from D_3 to D_4 and does vehicle decelerate by engine brake?

Read gear position, throttle position and vehicle speed.

No → Go to "11. A/T Does Not Shift: $D_3 \rightarrow D_4$", AT-113.

Yes ↓

1. Stop vehicle.
2. Go to "Cruise test — Part 3", AT-44.

Road Test (Cont'd)

CRUISE TEST — Part 3

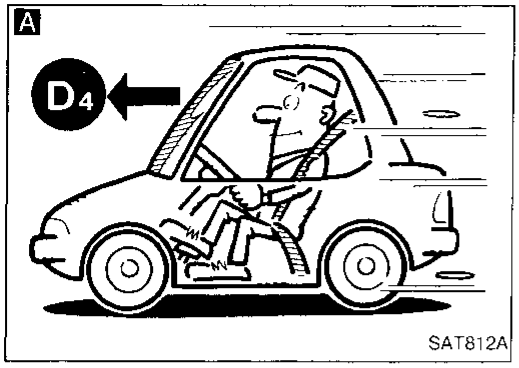

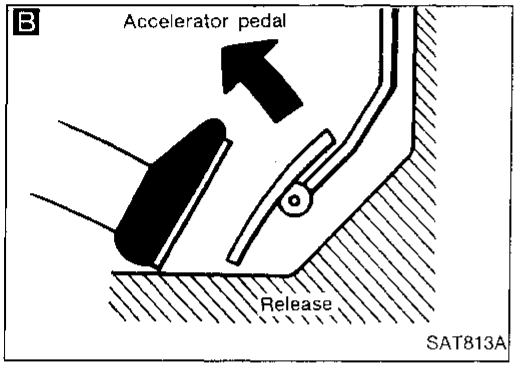

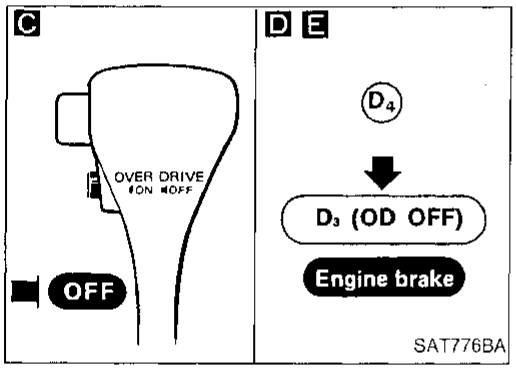

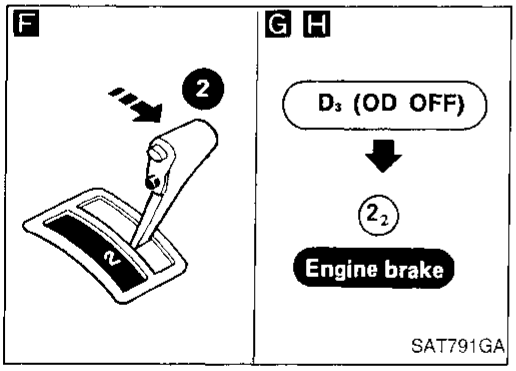

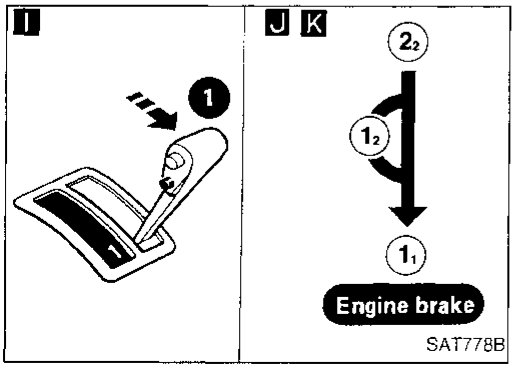

1. Confirm overdrive control switch is in "ON" position.
2. Confirm selector lever is in "D" position.

↓

A Accelerate vehicle using half-throttle to D_4.

↓

B Release accelerator pedal.

↓

C Set overdrive control switch to "OFF" position while driving in D_4.

↓

D Does A/T shift from D_4 to D_3 (O/D OFF)? **Read gear position and vehicle speed.**
- No → Go to "17. A/T Does Not Shift: $D_4 \rightarrow D_3$, When Overdrive Control Switch "ON" → "OFF"", AT-117.
- Yes ↓

E Does vehicle decelerate by engine brake?
- No → Go to "15. Engine Speed Does Not Return To Idle (Light Braking $D_4 \rightarrow D_3$)", AT-116.
- Yes ↓

F Move selector lever from "D" to "2" position while driving in D_3 (O/D OFF).

↓

G Does A/T shift from D_3 (O/D OFF) to 2_2? **Read gear position.**
- No → Go to "18. A/T Does Not Shift: $D_3 \rightarrow D_2$, When Selector Lever "D" → "2" Position", AT-118.
- Yes ↓

H Does vehicle decelerate by engine brake?
- No → Go to "15. Engine Speed Does Not Return To Idle (Light Braking $D_4 \rightarrow D_3$)", AT-116.
- Yes ↓

I J
1. Move selector lever from "2" to "1" position while driving in 2_2.
2. Does A/T shift from 2_2 to 1_1 position? **Read gear position.**

- No → Go to "19. A/T Does Not Shift: $2_2 \rightarrow 1_1$, When Selector lever "2" → "1" Position", AT-118.
- Yes ↓

K Does vehicle decelerate by engine brake?
- No → Go to "20. Vehicle Does Not Decelerate By Engine Brake", AT-119.
- Yes ↓

1. Stop vehicle.
2. Perform self-diagnosis. Refer to SELF-DIAGNOSTIC PROCEDURE, AT-22.

Shift Schedule

VEHICLE SPEED WHEN SHIFTING GEARS

2WD, 4WD (Final gear ratio: 4.363) and 4WD (Final gear ratio: 4.636)

Throttle position	Vehicle speed km/h (MPH)						
	$D_1 \rightarrow D_2$	$D_2 \rightarrow D_3$	$D_3 \rightarrow D_4$	$D_4 \rightarrow D_3$	$D_3 \rightarrow D_2$	$D_2 \rightarrow D_1$	$1_2 \rightarrow 1_1$
Full throttle	48 - 52 (30 - 32)	93 - 101 (58 - 63)	148 - 158 (92 - 98)	143 - 153 (89 - 95)	88 - 96 (55 - 60)	43 - 47 (27 - 29)	44 - 48 (27 - 30)
Half throttle	35 - 39 (22 - 24)	67 - 75 (42 - 47)	134 - 142 (83 - 88)	59 - 66 (37 - 41)	32 - 38 (20 - 24)	10 - 14 (6 - 9)	44 - 48 (27 - 30)

VEHICLE SPEED WHEN PERFORMING AND RELEASING LOCK-UP

2WD, 4WD (Final gear ratio: 4.363) and 4WD (Final gear ratio: 4.636)

Throttle position	Overdrive control switch [Shift position]	Vehicle speed km/h (MPH)	
		Lock-up "ON"	Lock-up "OFF"
Full throttle	ON [D_4]	149 - 157 (93 - 98)	144 - 152 (89 - 94)
	OFF [D_3]	93 - 101 (58 - 63)	88 - 96 (55 - 60)
Half throttle	ON [D_4]	141 - 149 (88 - 93)	85 - 93 (53 - 58)
	OFF [D_3]	74 - 82 (46 - 51)	71 - 79 (44 - 49)

Diagnostic Trouble Code (DTC) Chart

A/T RELATED ITEMS

Diagnostic trouble code No.*4		Detected items (Screen terms for CONSULT, "SELF-DIAG RESULTS" mode)	Malfunction is detected when ...
CONSULT GST	ECM*3		
P0705	1101	Inhibitor switch circuit (INHIBITOR SWITCH)	• A/T control unit does not receive the correct voltage signal from the switch based on the gear position.
P0710	1208	A/T fluid temperature sensor (FLUID TEMP SENSOR)	• A/T control unit receives an excessively low or high voltage from the sensor.
P0720	1102	Revolution sensor (VHCL SPEED SEN·A/T)	• A/T control unit does not receive the proper voltage signal from the sensor.
P0725	1207	Engine speed signal (ENGINE SPEED SIG)	• A/T control unit does not receive the proper voltage signal from the ECM.
P0731	1103	Improper shifting to 1st gear position (A/T 1ST SIGNAL)	• A/T cannot be shifted to the 1st gear position even if electrical circuit is good.
P0732	1104	Improper shifting to 2nd gear position (A/T 2ND SIGNAL)	• A/T cannot be shifted to the 2nd gear position even if electrical circuit is good.
P0733	1105	Improper shifting to 3rd gear position (A/T 3RD SIGNAL)	• A/T cannot be shifted to the 3rd gear position even if electrical circuit is good.
P0734	1106	Improper shifting to 4th gear position (A/T 4TH SIGNAL OR TCC*5)	• A/T cannot be shifted to the 4th gear position even if electrical circuit is good.
P0740	1204	T/C clutch solenoid valve (TOR CONV CLUTCH SV)	• A/T control unit detects an improper voltage drop when it tries to operate the solenoid valve.
P0744	1107	Improper lock-up operation (A/T TCC SIGNAL)	• A/T cannot perform lock-up even if electrical circuit is good.
P0745	1205	Line pressure solenoid valve (LINE PRESSURE S/V)	• A/T control unit detects an improper voltage drop when it tries to operate the solenoid valve.
P0750	1108	Shift solenoid valve A (SHIFT SOLENOID/V A)	• A/T control unit detects an improper voltage drop when it tries to operate the solenoid valve.
P0755	1201	Shift solenoid valve B (SHIFT SOLENOID/V B)	• A/T control unit detects an improper voltage drop when it tries to operate the solenoid valve.
P1705	1206	Throttle position sensor Throttle position switch (THRTL POSI SEN·A/T)	• A/T control unit receives an excessively low or high voltage from the sensor.
P1760	1203	Overrun clutch solenoid valve (OVERRUN CLUTCH S/V)	• A/T control unit detects an improper voltage drop when it tries to operate the solenoid valve.

*1: DRIVING pattern 1-6 means as follows:
Pattern 1 should meet b and c.
Pattern 2 should meet a and c.
Pattern 3 should meet a through e.
Pattern 4 should meet a and b.
Pattern 5 should meet a through c.
Pattern 6 should meet a through d.
*3: In Diagnostic Test Mode II (Self-diagnostic results)
*4: 1st trip DTC No. is the same as DTC No.
*5: Although "A/T 4TH SIGNAL OR TCC" is shown as a self-diagnostic result for P0734 with CONSULT, malfunction is present at 4th speed only.

a: Selector lever is in "D" position.
b: Vehicle speed is over 10 km/h (6 MPH).
c: Throttle opening is over 1/8.
d: Engine speed is over 450 rpm.
e: A/T fluid temperature is 20 - 120°C (68 - 248°F).

Diagnostic Trouble Code (DTC) Chart (Cont'd)

X: Applicable
—: Not applicable

Check Items (Possible Cause)	"DTC CONFIRMATION PROCEDURE" Quick Ref. *1	"OVERALL FUNCTION CHECK" Quick Ref. *2	Fail Safe System	MIL Illumination *8	Reference Page
• Harness or connectors (The switch circuit is open or shorted.) • Inhibitor switch	DRIVING (pattern 1)	—	—	2 trip	AT-55
• Harness or connectors (The sensor circuit is open or shorted.) • A/T fluid temperature sensor	DRIVING (pattern 6)	—	X	2 trip	AT-61
• Harness or connectors (The sensor circuit is open or shorted.) • Revolution sensor	DRIVING (pattern 2)	—	X*7	2 trip*3	AT-64
• Harness or connectors (The signal circuit is open or shorted.)	DRIVING (pattern 5)	—	X*7	2 trip*3	AT-66
• Shift solenoid valve A • Shift solenoid valve B • Overrun clutch solenoid valve • Line pressure solenoid valve • Each clutch • Hydraulic control circuit	DRIVING (pattern 3)	—	—	2 trip	AT-68 AT-71 AT-73 AT-75
• Harness or connectors (The solenoid circuit is open or shorted.) • T/C clutch solenoid valve	IGN: ON	—	X	2 trip	AT-80
• T/C clutch solenoid valve • Each clutch • Hydraulic control circuit	DRIVING (pattern 3)	—	—	2 trip	AT-83
• Harness or connectors (The solenoid circuit is open or shorted.) • Line pressure solenoid valve	IGN: ON	—	X	2 trip	AT-88
• Harness or connectors (The solenoid circuit is open or shorted.) • Shift solenoid valve A	IGN: ON	—	X*7	1 trip	AT-91
• Harness or connectors (The solenoid circuit is open or shorted.) • Shift solenoid valve B	IGN: ON	—	X*7	1 trip	AT-94
• Harness or connectors (The sensor circuit is open or shorted.) • Throttle position sensor • Throttle position switch	DRIVING (pattern 4)	—	X*7	1 trip	AT-97
• Harness or connectors (The solenoid circuit is open or shorted.) • Overrun clutch solenoid valve	IGN: ON	—	X	2 trip	AT-99

*1: • This is Quick Reference of "DTC CONFIRMATION PROCEDURE".
Details are described in each TROUBLE DIAGNOSIS FOR DTC PXXXX.

*2: • The "OVERALL FUNCTION CHECK" is a simplified and effective way to inspect a component or circuit.
In some cases, the "OVERALL FUNCTION CHECK" is used rather than a "DIAGNOSTIC TROUBLE CODE CONFIRMATION PROCEDURE".
When no DTC CONFIRMATION PROCEDURE is available, the "NG" result of the OVERALL FUNCTION CHECK can be considered to mean the same as a DTC detection.
• During an "NG" OVERALL FUNCTION CHECK, the DTC or 1st trip DTC might not be confirmed.
• This is Quick Reference of "OVERALL FUNCTION CHECK".
Details are described in each TROUBLE DIAGNOSIS FOR DTC PXXXX.

*7: • When the fail-safe operation occurs, the MIL illuminates immediately.

*8: • The MIL illuminates after A/T control unit enters the fail-safe mode in two consecutive trips, if both the "Revolution sensor" and the "Engine speed signal" meet the fail-safe condition at the same time.

Symptom Chart

		ON vehicle																		OFF vehicle										
—	Reference page (AT-)	35, 134		134		64, 102, 66		123		91, 132		94, 88		99, 80		61, 132		132		132		142, 153		170, 174		176		176, 185		180, 189		193
Reference page (AT-)	Numbers are arranged in order of probability. Perform inspections starting with number one and work up. Circled numbers indicate that the transmission must be removed from the vehicle.	Fluid level	Control linkage	Inhibitor switch	Throttle position sensor (Adjustment)	Revolution sensor and speed sensor	Engine speed signal	Engine idling rpm	Line pressure	Control valve assembly	Shift solenoid valve A	Shift solenoid valve B	Line pressure solenoid valve	Torque converter clutch solenoid valve	Overrun clutch solenoid valve	A/T fluid temperature sensor	Accumulator N-D	Accumulator 1-2	Accumulator 2-3	Accumulator 3-4 (N-R)	Ignition switch and starter	Torque converter	Oil pump	Reverse clutch	High clutch	Forward clutch	Forward one-way clutch	Overrun clutch	Low one-way clutch	Low & reverse brake	Brake band	Parking components
105	Engine does not start in "N", "P" positions.	.	2	3	.	.	.	.	.	.	.	.	.	.	.	.	.	.	.	.	1	.	.	.	.	.	.	.	.	.	.	.
105	Engine starts in position other than "N" and "P" positions.	.	1	2	.	.	.	.	.	.	.	.	.	.	.	.	.	.	.	.	.	.	.	.	.	.	.	.	.	.	.	.
—	Transmission noise in "P" and "N" positions.	1	.	.	3	4	5	.	2	.	.	.	.	.	.	.	.	.	.	.	.	⑦	⑥	.	.	.	.	.	.	.	.	.
105	Vehicle moves when changing into "P" position or parking gear does not disengage when shifted out of "P" position.	.	1	.	.	.	.	.	.	.	.	.	.	.	.	.	.	.	.	.	.	.	.	.	.	.	.	.	.	.	.	②
106	Vehicle runs in "N" position.	.	1	.	.	.	.	.	.	.	.	.	.	.	.	.	.	.	.	2	.	.	.	④	.	③	.	⑤	.	.	.	.
108	Vehicle will not run in "R" position (but runs in "D", "2" and "1" positions). Clutch slips. Very poor acceleration.	.	1	.	.	.	.	.	2	4	.	.	3	.	.	.	.	.	.	.	.	.	.	⑤	⑥	⑦	.	⑧	.	⑨	.	.
—	Vehicle braked when shifting into "R" position.	1	2	.	.	.	.	.	3	5	.	.	4	.	.	.	.	.	.	.	.	.	.	.	⑥	⑧	.	⑨	.	.	⑦	.
—	Sharp shock in shifting from "N" to "D" position.	.	.	.	2	.	5	1	3	7	.	.	6	.	.	4	8	.	.	.	.	.	.	.	.	⑨	.	.	.	.	.	.
—	Vehicle will not run in "D" and "2" positions (but runs in "1" and "R" positions).	.	1	.	.	.	.	.	.	.	.	.	.	.	.	.	.	.	.	.	.	.	.	.	.	.	.	.	②	.	.	.
109	Vehicle will not run in "D", "1", "2" positions (but runs in "R" position). Clutch slips. Very poor acceleration.	1	.	.	.	.	.	.	2	4	.	.	3	.	.	.	5	.	.	.	.	.	.	⑥	⑦	⑧	⑨	.	⑩	.	.	.
—	Clutches or brakes slip somewhat in starting.	1	2	.	3	.	.	.	4	6	.	.	5	.	.	.	7	.	.	8	.	⑬	⑫	⑩	.	⑨	.	.	.	⑪	.	.
—	Excessive creep.	.	.	.	.	.	.	1	.	.	.	.	.	.	.	.	.	.	.	.	.	.	.	.	.	.	.	.	.	.	.	.
108, 109	No creep at all.	1	.	.	.	.	.	.	2	3	.	.	.	.	.	.	.	.	.	.	.	⑥	⑤	.	.	④	.	.	.	.	.	.
—	Failure to change gear from "D_1" to "D_2".	.	2	1	.	5	.	.	.	4	3	.	.	.	.	.	.	.	.	.	.	.	.	.	.	.	.	.	.	.	⑥	.
—	Failure to change gear from "D_2" to "D_3".	.	2	1	.	5	.	.	.	4	.	3	.	.	.	.	.	.	.	.	.	.	.	.	⑥	.	.	.	.	.	⑦	.
—	Failure to change gear from "D_3" to "D_4".	.	2	1	.	4	.	.	.	.	3	.	.	.	.	5	.	.	.	.	.	.	.	.	.	.	.	.	.	.	⑥	.
111, 112, 113	Too high a gear change point from "D_1" to "D_2", from "D_2" to "D_3", from "D_3" to "D_4".	.	.	.	1	2	.	.	.	.	3	4	.	.	.	.	.	.	.	.	.	.	.	.	.	.	.	.	.	.	.	.
—	Gear change directly from "D_1" to "D_3" occurs.	1	.	.	.	.	.	.	.	.	.	.	.	.	.	.	.	2	.	.	.	.	.	.	.	.	.	.	.	.	③	.
—	Engine stops when shifting lever into "R", "D", "2" and "1".	.	.	.	.	.	.	1	.	3	.	.	.	2	.	.	.	.	.	.	.	④	.	.	.	.	.	.	.	.	.	.
—	Too sharp a shock in change from "D_1" to "D_2".	.	.	.	1	.	.	.	2	4	.	.	.	.	.	5	.	3	.	.	.	.	.	.	.	.	.	.	.	.	⑥	.
—	Too sharp a shock in change from "D_2" to "D_3".	.	.	.	1	.	.	.	2	4	.	.	.	.	.	.	.	.	3	.	.	.	.	.	⑤	.	.	.	.	.	⑥	.

Symptom Chart (Cont'd)

		ON vehicle																					OFF vehicle								
—	Reference page (AT-)	35, 134		134		64, 102, 66		123		91, 132		94, 88		99, 80		61, 132		132		132		142, 153		170, 174		176		176, 185		180, 189		193
Reference page (AT-)	Numbers are arranged in order of probability. Perform inspections starting with number one and work up. Circled numbers indicate that the transmission must be removed from the vehicle.	Fluid level	Control linkage	Inhibitor switch	Throttle position sensor (Adjustment)	Revolution sensor and speed sensor	Engine speed signal	Engine idling rpm	Line pressure	Control valve assembly	Shift solenoid valve A	Shift solenoid valve B	Line pressure solenoid valve	Torque converter clutch solenoid valve	Overrun clutch solenoid valve	A/T fluid temperature sensor	Accumulator N-D	Accumulator 1-2	Accumulator 2-3	Accumulator 3-4 (N-R)	Ignition switch and starter	Torque converter	Oil pump	Reverse clutch	High clutch	Forward clutch	Forward one-way clutch	Overrun clutch	Low one-way clutch	Low & reverse brake	Brake band	Parking components
—	Too sharp a shock in change from "D_3" to "D_4".	.	.	.	1	.	.	.	2	4	.	.	.	.	.	.	.	.	.	3	.	.	.	.	.	.	.	⑥	.	.	⑤	.
—	Almost no shock or clutches slipping in change from "D_1" to "D_2".	1	.	.	2	.	.	.	3	5	.	.	.	.	.	.	.	4	.	.	.	.	.	.	.	.	.	.	.	.	⑥	.
—	Almost no shock or slipping in change from "D_2" to "D_3".	1	.	.	2	.	.	.	3	5	.	.	.	.	.	.	.	.	4	.	.	.	.	.	⑥	.	.	.	.	.	⑦	.
—	Almost no shock or slipping in change from "D_3" to "D_4".	1	.	.	2	.	.	.	3	5	.	.	.	.	.	.	.	.	.	4	.	.	.	.	⑥	.	.	.	.	.	⑦	.
—	Vehicle braked by gear change from "D_1" to "D_2".	1	.	.	.	.	.	.	.	.	.	.	.	.	.	.	.	.	.	.	.	.	.	②	④	.	.	.	⑤	③	.	.
—	Vehicle braked by gear change from "D_2" to "D_3".	1	.	.	.	.	.	.	.	.	.	.	.	.	.	.	.	.	.	.	.	.	.	.	.	.	.	.	.	.	②	.
—	Vehicle braked by gear change from "D_3" to "D_4".	1	.	.	.	.	.	.	.	.	.	.	.	.	.	.	.	.	.	.	.	.	.	④	.	.	③	②	.	.	.	.
—	Maximum speed not attained. Acceleration poor.	1	.	2	.	.	.	.	.	5	3	4	.	.	.	.	.	.	.	.	.	⑪	⑩	⑥	⑦	.	.	.	.	⑨	⑧	.
—	Failure to change gear from "D_4" to "D_3".	1	.	.	2	.	.	.	.	6	4	.	5	.	3	.	.	.	.	.	.	.	.	.	.	.	.	⑧	.	⑦	.	.
—	Failure to change gear from "D_3" to "D_2" or from "D_4" to "D_2".	1	.	.	2	.	.	.	.	5	3	4	.	.	.	.	.	.	.	.	.	.	.	.	⑥	.	.	.	.	.	⑦	.
—	Failure to change gear from "D_2" to "D_1" or from "D_3" to "D_1".	1	.	.	2	.	.	.	.	5	3	4	.	.	.	.	.	.	.	.	.	.	.	.	⑦	.	.	.	⑥	.	⑧	.
—	Gear change shock felt during deceleration by releasing accelerator pedal.	.	.	.	1	.	.	.	2	4	.	.	.	.	3	.	.	.	.	.	.	.	.	.	.	.	.	.	.	.	.	.
—	Too high a change point from "D_4" to "D_3", from "D_3" to "D_2", from "D_2" to "D_1".	.	.	.	1	2	.	.	.	.	.	.	.	.	.	.	.	.	.	.	.	.	.	.	.	.	.	.	.	.	.	.
—	Kickdown does not operate when depressing pedal in "D_4" within kickdown vehicle speed.	.	.	.	1	2	.	.	.	.	3	4	.	.	.	.	.	.	.	.	.	.	.	.	.	.	.	.	.	.	.	.
—	Kickdown operates or engine overruns when depressing pedal in "D_4" beyond kickdown vehicle speed limit.	.	.	.	2	1	.	.	.	.	3	4	.	.	.	.	.	.	.	.	.	.	.	.	.	.	.	.	.	.	.	.
—	Races extremely fast or slips in changing from "D_4" to "D_3" when depressing pedal.	1	.	.	2	.	.	.	3	5	.	.	4	.	.	.	.	.	.	.	.	.	.	.	⑥	⑦	.	.	.	.	.	.
—	Races extremely fast or slips in changing from "D_4" to "D_2" when depressing pedal.	1	.	.	2	.	.	.	3	6	5	.	4	.	.	.	.	.	.	.	.	.	.	.	.	⑧	.	.	.	.	⑦	.
	Races extremely fast or slips in changing from "D_3" to "D_2" when depressing pedal.	1	.	.	2	.	.	.	3	5	.	.	4	.	.	6	.	.	7	.	.	.	.	.	⑩	⑨	.	.	.	.	⑧	.
	Races extremely fast or slips in changing from "D_4" or "D_3" to "D_1" when depressing pedal.	1	.	.	2	.	.	.	3	5	.	.	4	.	.	.	.	.	.	.	.	.	.	.	.	⑥	⑦	.	⑧	.	.	.
—	Vehicle will not run in any position.	1	2	.	.	.	.	.	3	.	.	.	4	.	.	.	.	.	.	.	.	⑨	⑤	.	⑥	.	.	.	.	⑧	⑦	⑩
—	Transmission noise in "D", "2", "1" and "R" positions.	1	.	.	.	.	.	.	.	.	.	.	.	.	.	.	.	.	.	.	.	②	.	.	.	.	.	.	.	.	.	.

Symptom Chart (Cont'd)

		ON vehicle																		OFF vehicle									
—	Reference page (AT-)	35, 134		134		64, 102, 66		123		91, 132		94, 88		99, 80		61, 132		132		132	142, 153		170, 174		176		176, 185		180, 189		193
Reference page (AT-)	Numbers are arranged in order of probability. Perform inspections starting with number one and work up. Circled numbers indicate that the transmission must be removed from the vehicle.	Fluid level	Control linkage	Inhibitor switch	Throttle position sensor (Adjustment)	Revolution sensor and speed sensor	Engine speed signal	Engine idling rpm	Line pressure	Control valve assembly	Shift solenoid valve A	Shift solenoid valve B	Line pressure solenoid valve	Torque converter clutch solenoid valve	Overrun clutch solenoid valve	A/T fluid temperature sensor	Accumulator N-D	Accumulator 1-2	Accumulator 2-3	Accumulator 3-4 (N-R)	Ignition switch and starter	Torque converter	Oil pump	Reverse clutch	High clutch	Forward clutch	Forward one-way clutch	Overrun clutch	Low one-way clutch	Low & reverse brake	Brake band	Parking components
116	Failure to change from "D_3" to "2" when changing lever into "2" position.	.	7	1	2	.	.	.	.	6	5	4	.	.	3	.	.	.	.	.	.	.	.	.	.	.	⑨	.	.	⑧	.
—	Gear change from "2_2" to "2_3" in "2" position.	.	.	1	.	.	.	.	.	.	.	.	.	.	.	.	.	.	.	.	.	.	.	.	.	.	.	.	.	.	.
117	Engine brake does not operate in "1" position.	.	2	1	3	4	.	.	.	6	5	.	.	.	7	.	.	.	.	.	.	.	.	.	.	⑧	.	⑨	.	.
—	Gear change from "1_1" to "1_2" in "1" position.		2	1	.	.	.	.	.	.	.	.	.	.	.	.	.	.	.	.	.	.	.	.	.	.	.	.	.	.
—	Does not change from "1_2" to "1_1" in "1" position.	.	.	1	.	2	.	.	.	4	3	.	.	.	5	.	.	.	.	.	.	.	.	.	.	⑥	.	⑦	.	.
—	Large shock changing from "1_2" to "1_1" in "1" position.	.	.	.	.	.	.	.	.	1	.	.	.	.	.	.	.	.	.	.	.	.	.	.	.	.	.	②	.	.
—	Transmission overheats.	1	.	.	3	.	.	2	4	6	.	.	5	.	.	.	.	.	.	.	⑭	⑦	⑧	⑨	⑪	.	⑫	.	⑬	⑩	.
—	ATF shoots out during operation. White smoke emitted from exhaust pipe during operation.	1	.	.	.	.	.	.	.	.	.	.	.	.	.	.	.	.	.	.	.	.	②	③	⑤	.	⑥	.	⑦	④	.
—	Offensive smell at fluid charging pipe.	1	.	.	.	.	.	.	.	.	.	.	.	.	.	.	.	.	.	.	②	③	④	⑤	⑦	.	⑧	.	⑨	⑥	.
—	Torque converter is not locked up.	.	.	3	1	2	4	.	6	8	.	.	.	7	.	5	.	.	.	.	⑨	.	.	.	.	.	.	.	.	.	.
—	Torque converter clutch piston slip.	1	.	.	2	.	.	.	3	6	.	.	5	4	.	.	.	.	.	.	⑦	.	.	.	.	.	.	.	.	.	.
114	Lock-up point is extremely high or low.	.	.	.	1	2	.	.	.	4	.	.	.	3	.	.	.	.	.	.	.	.	.	.	.	.	.	.	.	.	.
—	A/T does not shift to "D_4" when driving with overdrive control switch "ON".	.	.	2	1	3	.	.	8	6	4	.	.	.	5	7	.	.	.	.	.	.	.	.	.	.	⑩	.	.	⑨	.
—	Engine is stopped at "R", "D", "2" and "1" positions.	1	.	.	.	.	.	.	.	5	4	3	.	2	.	.	.	.	.	.	.	.	.	.	.	.	.	.	.	.

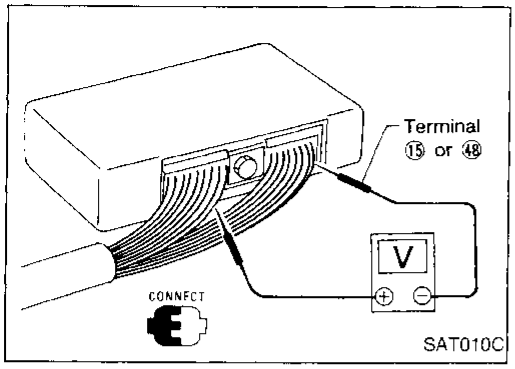

A/T Control Unit Terminals and Reference Value

PREPARATION

- Measure voltage between each terminal and terminal ⑮ or ㊽ by following "A/T CONTROL UNIT INSPECTION TABLE".

A/T CONTROL UNIT HARNESS CONNECTOR TERMINAL LAYOUT

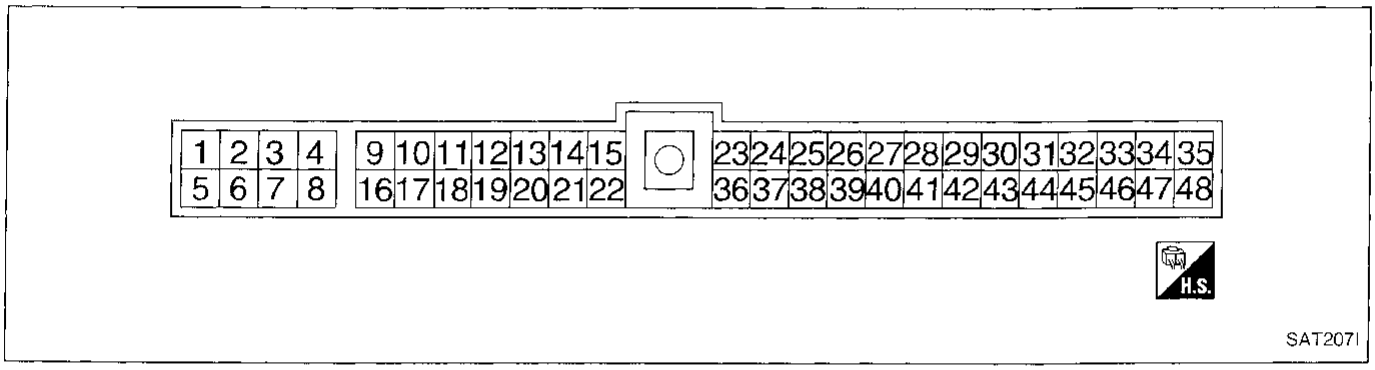

A/T CONTROL UNIT INSPECTION TABLE

(Data are reference values.)

Terminal No.	Item	Condition		Judgement standard
1	Line pressure solenoid valve		When releasing accelerator pedal after warming up engine.	1.5 - 2.5V
			When depressing accelerator pedal fully after warming up engine.	0.5V or less
2	Line pressure solenoid valve (with dropping resistor)	ON	When releasing accelerator pedal after warming up engine.	5 - 14V
			When depressing accelerator pedal fully after warming up engine.	0.5V or less
3	O/D OFF indicator lamp		When setting overdrive control switch in "OFF" position.	1V or less
			When setting overdrive control switch in "ON" position.	Battery voltage
4	Power source		When turning ignition switch to "ON".	Battery voltage
			When turning ignition switch to "OFF".	1V or less

A/T Control Unit Terminals and Reference Value (Cont'd)

Terminal No.	Item	Condition		Judgement standard
5	Torque converter clutch solenoid valve		When A/T performs lock-up.	8 - 15V
			When A/T does not perform lock- up.	1V or less
6	Shift solenoid valve A		When shift solenoid valve A operates. (When driving in "D_1" or "D_4".)	Battery voltage
			When shift solenoid valve A does not operate. (When driving in "D_2" or "D_3".)	1V or less
7	Shift solenoid valve B		When shift solenoid valve B operates. (When driving in "D_1" or "D_2".)	Battery voltage
			When shift solenoid valve B does not operate. (When driving in "D_3" or "D_4".)	1V or less
8	Overrun clutch solenoid valve		When overrun clutch solenoid valve operates.	Battery voltage
			When overrun clutch solenoid valve does not operate.	1V or less
9	Power source		Same as No. 4	
10*	DT1		—	—
11*	DT2		—	—
12*	DT3		—	—
13*	"N" position signal		When setting selector lever to "N" or "P" position.	1V or less
			When setting selector lever to other positions.	Approximately 5V
14	Closed throttle position switch (in throttle position switch)		When releasing accelerator pedal after warming up engine.	Battery voltage
			When depressing accelerator pedal after warming up engine.	1V or less
15	Ground		—	—
16	Inhibitor "1" position switch		When setting selector lever to "1" position.	Battery voltage
			When setting selector lever to other positions.	1V or less
17	Inhibitor "2" position switch		When setting selector lever to "2" position.	Battery voltage
			When setting selector lever to other positions.	1V or less
18	Inhibitor "D" position switch		When setting selector lever to "D" position.	Battery voltage
			When setting selector lever to other positions.	1V or less

*: These terminals are connected to the ECM (ECCS control module).

A/T Control Unit Terminals and Reference Value (Cont'd)

Terminal No.	Item	Condition		Judgement standard
19	Inhibitor "N" or "P" position switch		When setting selector lever to "N" or "P" position.	Battery voltage
			When setting selector lever to other positions.	1V or less
20	Inhibitor "R" position switch		When setting selector lever to "R" position.	Battery voltage
			When setting selector lever to other positions.	1V or less
21	Wide open throttle position switch (in throttle position switch)		When depressing accelerator pedal more than half-way after warming up engine.	Battery voltage
			When releasing accelerator pedal after warming up engine.	1V or less
22	—		—	—
23	Power source (Back-up)	ON or OFF	When turning ignition switch to "OFF".	Battery voltage
			When turning ignition switch to "ON".	Battery voltage
24	Engine speed signal	ON	When engine runs at idle speed.	0.6V
			When engine runs at 4,000 rpm.	Approximately 2.2V
25	Revolution sensor (Measure in AC range)		When vehicle cruises at 30 km/h (19 MPH).	1V or more Voltage rises gradually in response to vehicle speed.
			When vehicle parks.	0V
26	—		—	—
27	Vehicle speed sensor		When moving vehicle at 2 to 3 km/h (1 to 2 MPH) for 1 m (3 ft) or more.	Voltage varies between less than 1V and more than 4.5V
28*	—		—	—
29*	—		—	—
30*	—		—	—
31	Throttle position sensor (Power source)		—	4.5 - 5.5V
32	—		—	—

*: These terminals are connected to the Data link connector for CONSULT.

A/T Control Unit Terminals and Reference Value (Cont'd)

Terminal No.	Item	Condition		Judgement standard
33	A/T fluid temperature sensor		When ATF temperature is 20°C (68°F).	Approximately 1.5V
			When ATF temperature is 80°C (176°F).	Approximately 0.5V
34	Throttle position sensor		When depressing accelerator pedal slowly after warming up engine. (Voltage rises gradually in response to throttle position.)	Fully-closed throttle: Approximately 0.5V Fully-open throttle: Approximately 4V
35	Throttle position sensor (Ground)		—	—
36	—		—	—
37	ASCD cruise signal	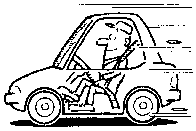	When ASCD cruise is being performed. ("CRUISE" light comes on.)	Battery voltage
			When ASCD cruise is not being performed. ("CRUISE" light does not comes on.)	1V or less
38	—		—	—
39	Overdrive control switch		When setting overdrive control switch in "ON" position	Battery voltage
			When setting overdrive control switch in "OFF" position	1V or less
40	ASCD OD cut signal	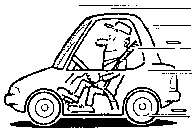	When "ACCEL" set switch on ASCD cruise is released.	5 - 8V
			When "ACCEL" set switch on ASCD cruise is applied.	1V or less
41	—		—	—
42	—		—	—
43	—		—	—
44	—		—	—
45*	OBD-II		—	—
46	—		—	—
47	—		—	—
48	Ground		—	—

* This terminal is connected to the ECM (ECCS control module).

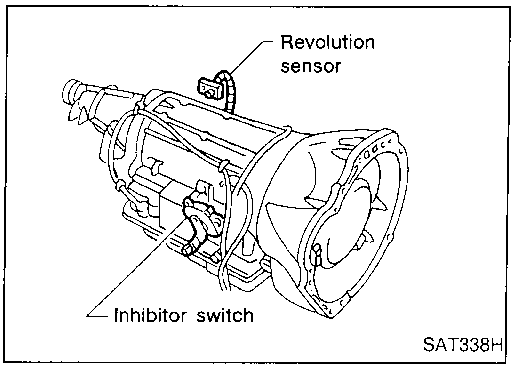

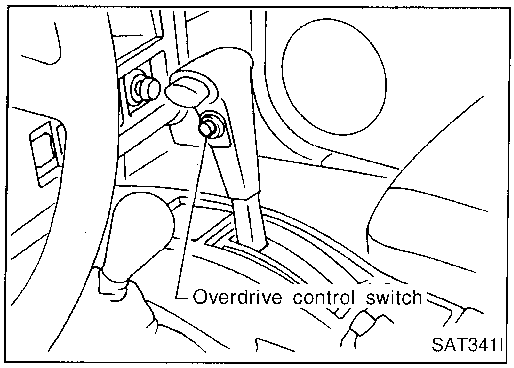

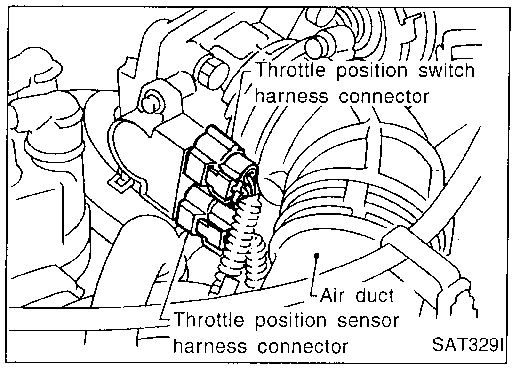

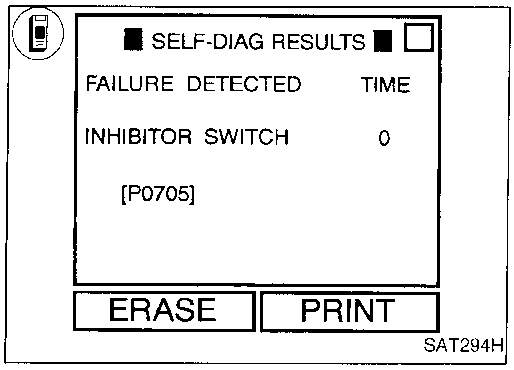

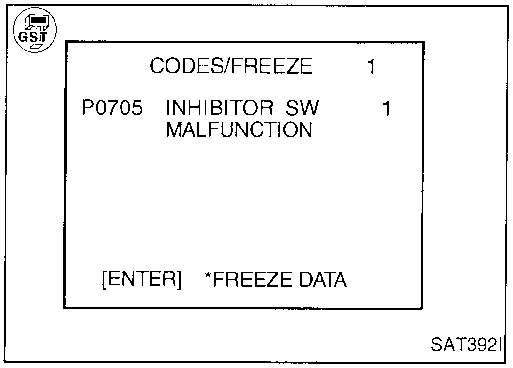

Inhibitor, Overdrive Control and Throttle Position Switches

DESCRIPTION

- Inhibitor switch
  Detects the selector lever position and sends a signal to the A/T control unit.
- Overdrive control switch
  Detects the overdrive control switch position (ON or OFF) and sends a signal to the A/T control unit.
- Throttle position switch
  Consists of a wide-open throttle position switch and a closed throttle position switch.
  The wide-open position switch sends a signal to the A/T control unit when the throttle valve is open at least 1/2 of the full throttle position. The closed throttle position switch sends a signal to the A/T control unit when the throttle valve is fully closed.

Diagnostic trouble code	Malfunction is detected when ...	Check item (Possible cause)
: INHIBITOR SWITCH : P0705 : MIL Code No. 1101	A/T control unit does not receive the correct voltage signal from the switch based on the gear position.	• Harness or connectors (The inhibitor switch circuit is open or shorted.) • Inhibitor switch

Diagnostic trouble code (DTC) confirmation procedure

After the repair, perform the following procedure to confirm the malfunction is eliminated.

1) Start engine.
2) Select "SELF-DIAG RESULTS" mode for ECM with CONSULT.
3) Drive vehicle under the following conditions:
   Selector lever in "D", overdrive control switch in "OFF" position, vehicle speed higher than 10 km/h (6 MPH), throttle opening greater than 1/2 of the full throttle position and driving for more than 5 seconds.

OR

1) Start engine.
2) Drive vehicle under the following conditions:
   Selector lever in "D", overdrive control switch in "OFF" position, vehicle speed higher than 10 km/h (6 MPH), throttle opening greater than 1/2 of the full throttle position and driving for more than 5 seconds.
3) Select "MODE 7" with GST.

OR

1) Start engine.
2) Drive vehicle under the following conditions:
   Selector lever in "D", overdrive control switch in "OFF" position, vehicle speed higher than 10 km/h (6 MPH), throttle opening greater than 1/2 of the full throttle position and driving for more than 5 seconds.
3) Perform self-diagnosis for ECM.
   Refer to EC section ["Malfunction Indicator Lamp (MIL)", "ON BOARD DIAGNOSTIC SYSTEM DESCRIPTION"].

Inhibitor, Overdrive Control and Throttle Position Switches (Cont'd)

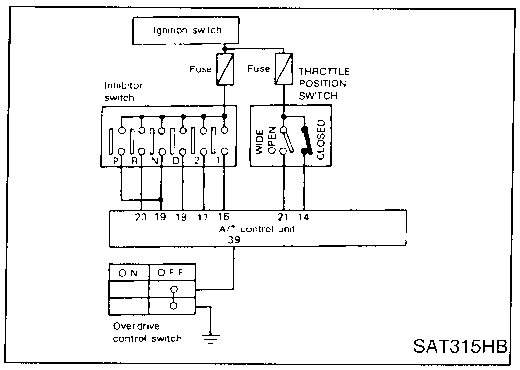

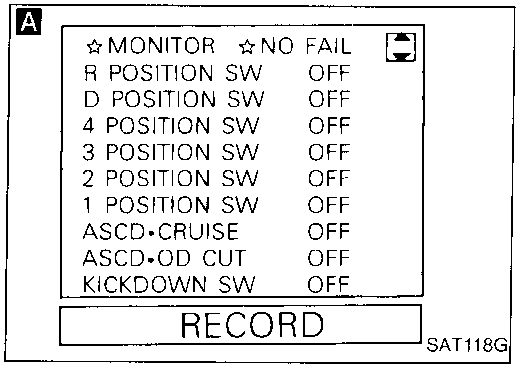

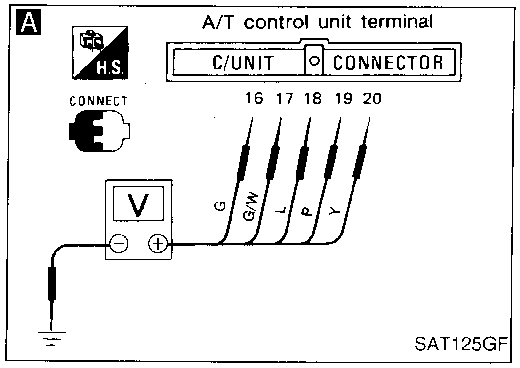

A

CHECK INHIBITOR SWITCH CIRCUIT.

1. Turn ignition switch to "ON" position. (Do not start engine.)
2. Select "ECU INPUT SIGNALS" in Data Monitor.
3. Read out "R, N, D, 1 and 2 position switches" moving selector lever to each position. Check the signal of the selector lever position is indicated properly.

NG → Check the following items:
- Inhibitor switch
  Refer to "Component Inspection", AT-59.
- Harness for short or open between ignition switch and inhibitor switch (Main harness)
- Harness for short or open between inhibitor switch and A/T control unit (Main harness)

OR

1. Turn ignition switch to "ON" position. (Do not start engine.)
2. Check voltage between A/T control unit terminals ⑯, ⑰, ⑱, ⑲, ⑳ and ground while moving selector lever through each position.

Voltage:
B: Battery voltage
0: 0V

Lever position	Terminal No.				
	⑲	⑳	⑱	⑰	⑯
P, N	**B**	0	0	0	0
R	0	**B**	0	0	0
D	0	0	**B**	0	0
2	0	0	0	**B**	0
1	0	0	0	0	**B**

OK ↓

Ⓐ

(Go to next page.)

Inhibitor, Overdrive Control and Throttle Position Switches (Cont'd)

B

☆MONITOR	☆NO FAIL
VHCL/S SE•A/T	0km/h
VHCL/S SE•MTR	5km/h
THRTL POS SEN	0.4V
FLUID TEMP SE	1.2V
BATTERY VOLT	13.4V
ENGINE SPEED	1024rpm
OVERDRIVE SW	O N
P/N POSI SW	O N
R POSITION SW	OFF

RECORD

SAT076H

B

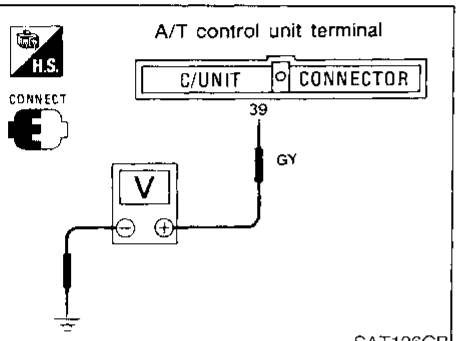

SAT126GB

Ⓐ

B

CHECK OVERDRIVE CONTROL SWITCH CIRCUIT.

1. Turn ignition switch to "ON" position.
   (Do not start engine.)
2. Select "ECU INPUT SIGNALS" in Data Monitor.
3. Read out "OVERDRIVE SWITCH".
   Check the signal of the overdrive control switch is indicated properly.
   (Overdrive control switch "ON" displayed on CONSULT means overdrive "OFF".)

NG →

Check the following items.
- Overdrive control switch Refer to "Component Inspection", AT-59.
- Harness for short or open between A/T control unit and overdrive control switch (Main harness)
- Harness for short or open of ground circuit for overdrive control switch (Main harness)

— OR —

1. Turn ignition switch to "ON" position.
   (Do not start engine.)
2. Check voltage between A/T control unit terminal ㊴ and ground when overdrive control switch is "ON" and "OFF".

Switch position	Voltage
ON	Battery voltage
OFF	1V or less

OK ↓

Ⓑ

(Go to next page.)

Inhibitor, Overdrive Control and Throttle Position Switches (Cont'd)

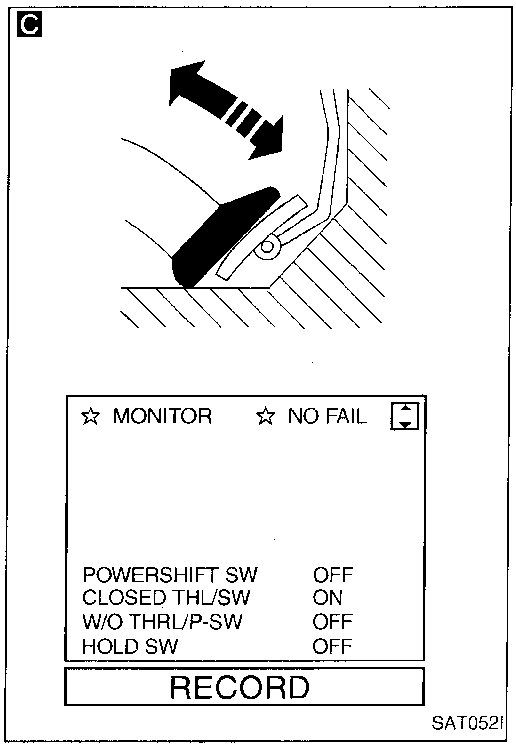

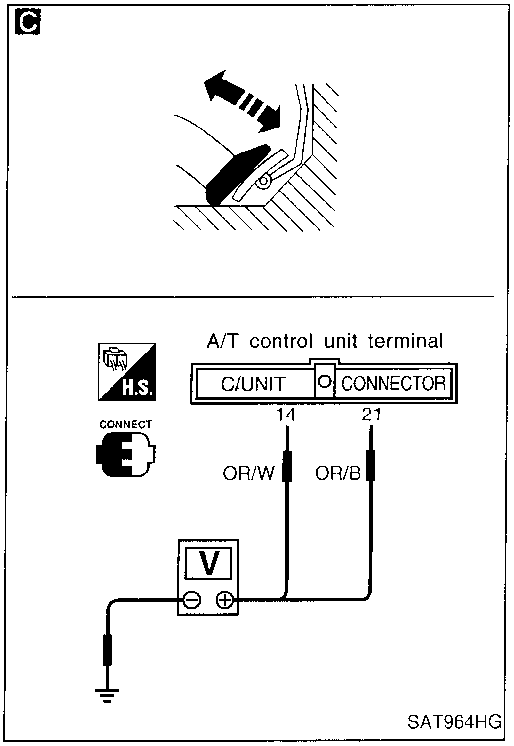

Ⓑ

C

CHECK THROTTLE POSITION SWITCH CIRCUIT.

1. Turn ignition switch to "ON" position.
   (Do not start engine.)
2. Select "ECU INPUT SIGNALS" in Data Monitor.
3. Read out "CLOSED THL/SW" and "W/O THRL/P-SW" depressing and releasing accelerator pedal.
   Check the signal of throttle position switch is indicated properly.

Accelerator pedal condition	Data monitor	
	CLOSED THL/SW	W/O THRL/P-SW
Released	ON	OFF
Fully depressed	OFF	ON

OR

1. Turn ignition switch to "ON" position.
   (Do not start engine.)
2. Check voltage between A/T control unit terminals ⑭, ㉑ and ground while depressing, and releasing accelerator pedal slowly. (after warming up engine)

Accelerator pedal condition	Voltage	
	Terminal No. ⑭	Terminal No. ㉑
Released	Battery voltage	1V or less
Fully depressed	1V or less	Battery voltage

NG → Check the following items:
- Throttle position switch Refer to "Component Inspection", AT-60.
- Harness for short or open between ignition switch and throttle position switch (Main harness)
- Harness for short or open between throttle position switch and A/T control unit (Main harness)

OK ↓

Perform Diagnostic Trouble Code (DTC) confirmation procedure, AT-55.

NG → 1. Perform A/T control unit input/output signal inspection.
2. If NG, recheck A/T control unit pin terminals for damage or loose connection with harness connector.

OK ↓

INSPECTION END

Inhibitor, Overdrive Control and Throttle Position Switches (Cont'd)

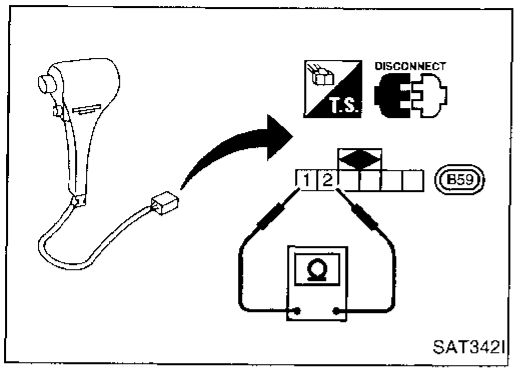

SAT342I

COMPONENT INSPECTION

Overdrive control switch

- Check continuity between two terminals.

Switch position	Continuity
ON	No
OFF	Yes

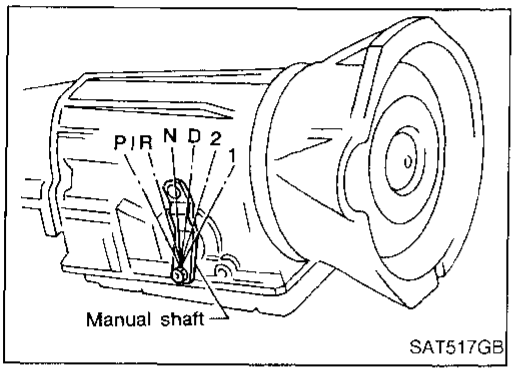

SAT517GB

Inhibitor switch

1. Check continuity between terminals ① and ② and between terminals ③ and ④, ⑤, ⑥, ⑦, ⑧, ⑨ while moving manual shaft through each position.

Lever position	Terminal No.	
P	① — ②	③ — ④
R	③ — ⑤	
N	① — ②	③ — ⑥
D	③ — ⑦	
2	③ — ⑧	
1	③ — ⑨	

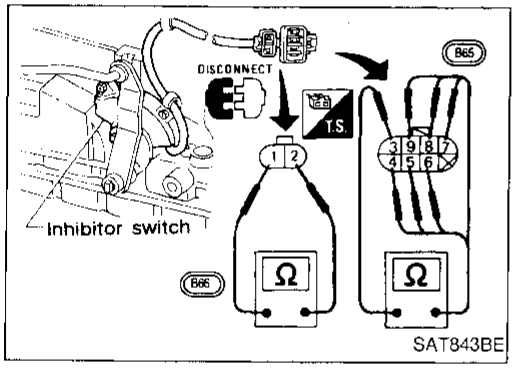

SAT843BE

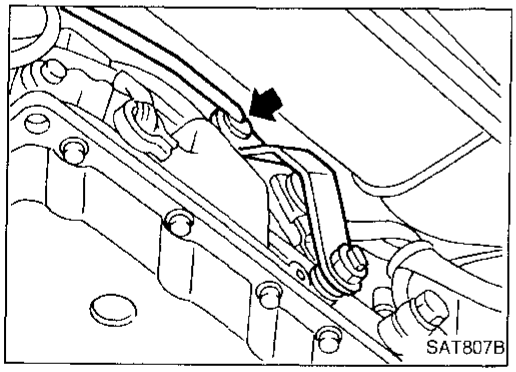
SAT807B

2. If NG, check again with manual control linkage disconnected from manual shaft of A/T assembly. Refer to step 1.
3. If OK on step 2, adjust manual control linkage. Refer to AT-134.

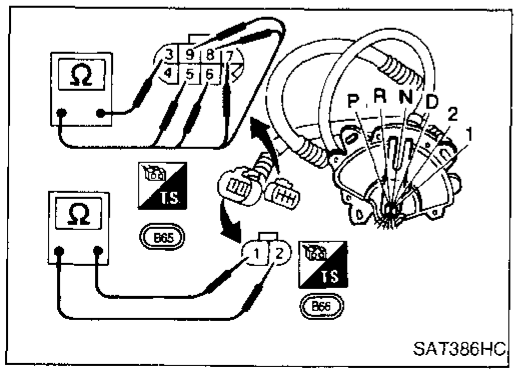

SAT386HC

4. If NG on step 2, remove inhibitor switch from A/T and check continuity of inhibitor switch terminals. Refer to step 1.
5. If OK on step 4, adjust inhibitor switch. Refer to AT-134.
6. If NG on step 4, replace inhibitor switch.

Inhibitor, Overdrive Control and Throttle Position Switches (Cont'd)

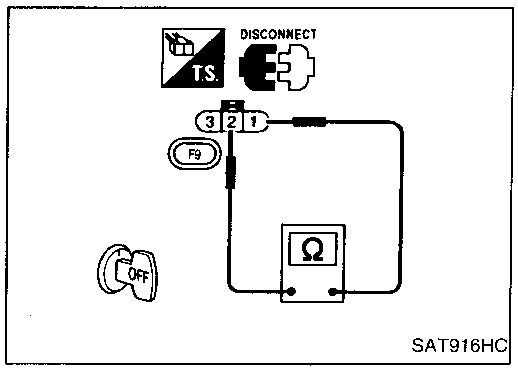

Throttle position switch

Closed throttle position switch (idle position)

- Check continuity between terminals ① and ② .

Accelerator pedal condition	Continuity
Released	Yes
Depressed	No

- To adjust closed throttle position switch, refer to EC section ("Basic Inspection", "TROUBLE DIAGNOSIS — Basic Inspection").

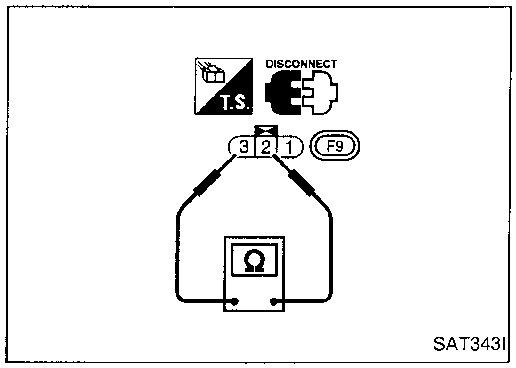

Wide open throttle position switch

- Check continuity between terminals ② and ③ .

Accelerator pedal condition	Continuity
Released	No
Depressed	Yes

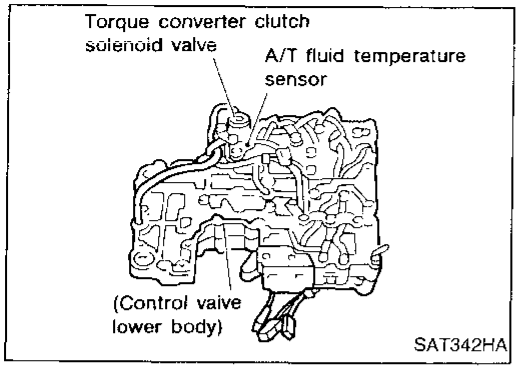

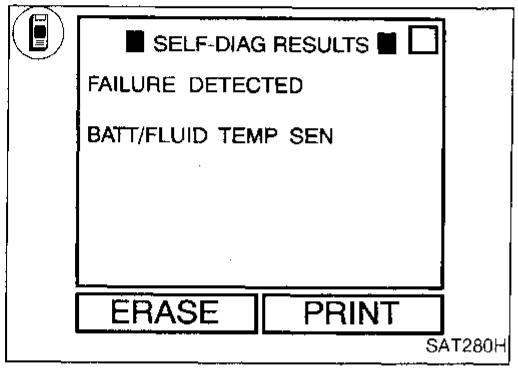

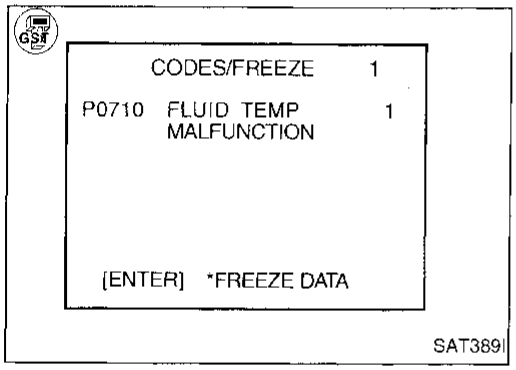

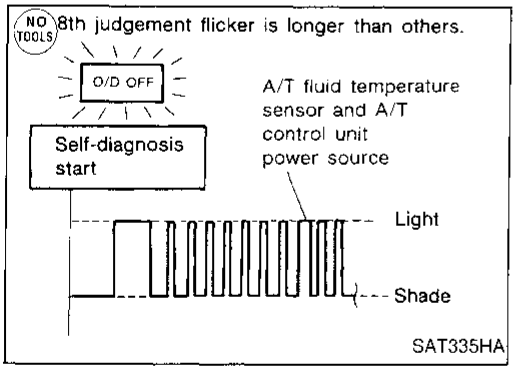

A/T Fluid Temperature Sensor Circuit and A/T Control Unit Power Source

DESCRIPTION

The A/T fluid temperature sensor detects the A/T fluid temperature and sends a signal to the A/T control unit.

Diagnostic trouble code	Malfunction is detected when ...	Check item (Possible cause)
: BATT/FLUID TEMP : P0710 : 8th judgement flicker	A/T control unit receives an excessively low or high voltage from the sensor.	• Harness or connectors (The sensor circuit is open or shorted.) • A/T fluid temperature sensor

Diagnostic Trouble Code (DTC) confirmation procedure

After the repair, perform the following procedure to confirm the malfunction is eliminated.

1) Start engine.
2) Select "SELF-DIAG RESULTS" mode with CONSULT.
3) Drive vehicle under the following conditions:
Selector lever in "D", vehicle speed higher than 10 km/h (6 MPH), throttle opening greater than 1/8 of the full open position, engine speed higher than 450 rpm and driving for more than 10 minutes.

OR

1) Start engine.
2) Drive vehicle under the following conditions:
Selector lever in "D", vehicle speed higher than 10 km/h (6 MPH), throttle opening greater than 1/8 of the full open position, engine speed higher than 450 rpm and driving for more than 10 minutes.
3) Select "MODE 7" with GST.

OR

1) Start engine.
2) Drive vehicle under the following conditions:
Selector lever in "D", vehicle speed higher than 10 km/h (6 MPH), throttle opening greater than 1/8 of the full open position, engine speed higher than 450 rpm and driving for more than 10 minutes.
3) Perform self-diagnosis.
Refer to SELF-DIAGNOSTIC PROCEDURE (No Tools), AT-23.

A/T Fluid Temperature Sensor Circuit and A/T Control Unit Power Source (Cont'd)

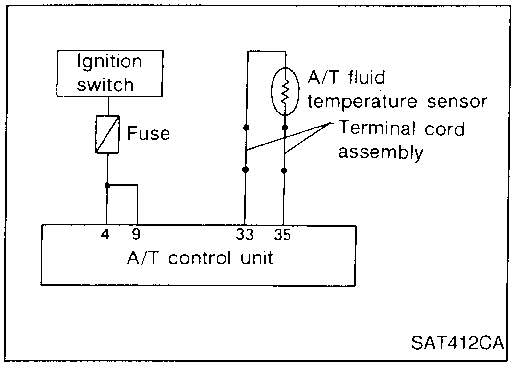

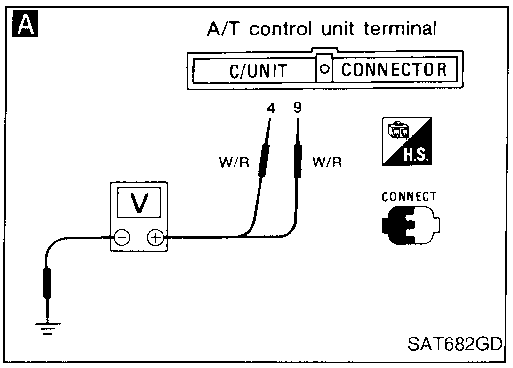

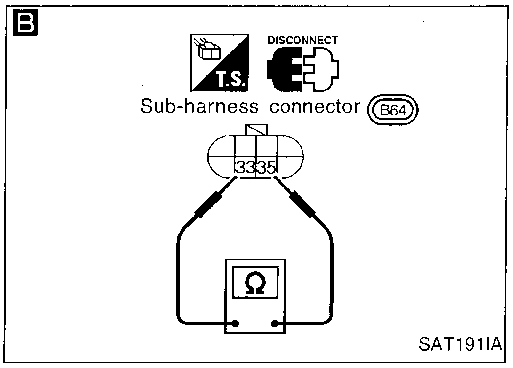

A

CHECK A/T CONTROL UNIT POWER SOURCE.

1. Turn ignition switch to "ON" position. (Do not start engine.)
2. Check voltage between A/T control unit terminals ④, ⑨ and ground.
   Battery voltage should exist.

NG →

Check the following items:
- Harness for short or open between ignition switch and A/T control unit (Main harness)
- Ignition switch and fuse
  Refer to EL section ("POWER SUPPLY ROUTING").

OK ↓

B

CHECK A/T FLUID TEMPERATURE SENSOR WITH TERMINAL CORD ASSEMBLY.

1. Turn ignition switch to "OFF" position.
2. Disconnect terminal cord assembly connector in engine compartment.
3. Check resistance between terminals ㉝ and ㉟ when A/T is cold.
   Resistance:
   Cold [20°C (68°F)]
   Approximately 2.5 kΩ
4. Reinstall any part removed.

NG →

1. Remove oil pan.
2. Check the following items:
   - A/T fluid temperature sensor
     Refer to "Component Inspection" on next page.
   - Harness of terminal cord assembly for short or open

OK ↓

Ⓐ
(Go to next page.)

A/T Fluid Temperature Sensor Circuit and A/T Control Unit Power Source (Cont'd)

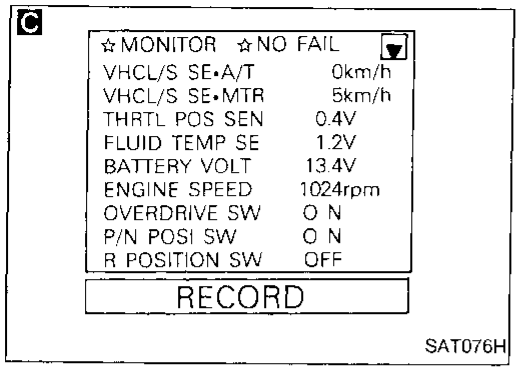

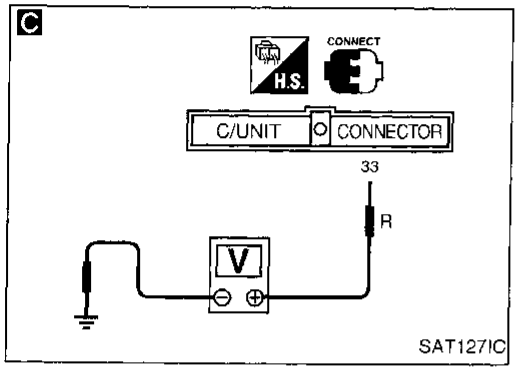

Ⓐ

CHECK INPUT SIGNAL OF A/T FLUID TEMPERATURE SENSOR.

1. Start engine.
2. Select "ECU INPUT SIGNALS" in Data Monitor.
3. Read out the value of "FLUID TEMP SE".

Voltage:
Cold [20°C (68°F)] →
Hot [80°C (176°F)]:
Approximately
1.5V → 0.5V

OR

1. Start engine.
2. Check voltage between A/T control unit terminal ㉝ and ground while warming up A/T.

Voltage:
Cold [20°C (68°F)] →
Hot [80°C (176°F)]:
Approximately
1.5V → 0.5V

NG → Check the following item:
- Harness for short or open between A/T control unit and terminal cord assembly (Main harness)

OK ↓

Perform Diagnostic Trouble Code (DTC) confirmation procedure, AT-61.

NG → 1. Perform A/T control unit input/output signal inspection.
2. If NG, recheck A/T control unit pin terminals for damage or loose connection with harness connector.

OK ↓

INSPECTION END

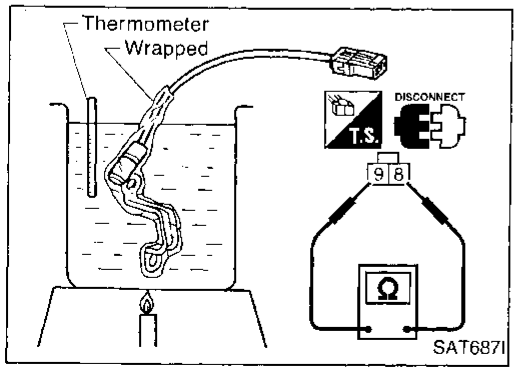

COMPONENT INSPECTION

A/T fluid temperature sensor

- For removal, refer to AT-132.
- Check resistance between two terminals while changing temperature as shown at left.

Temperature °C (°F)	Resistance
20 (68)	Approximately 2.5 kΩ
80 (176)	Approximately 0.3 kΩ

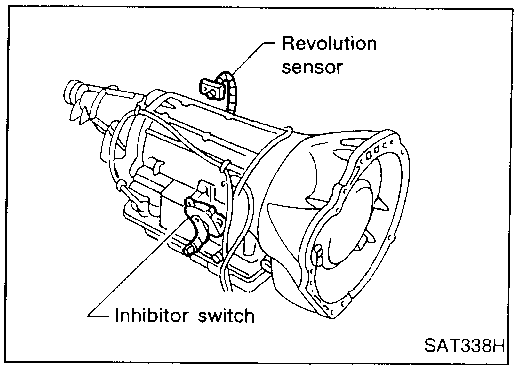

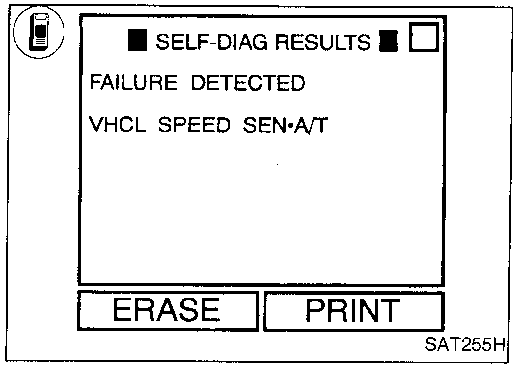

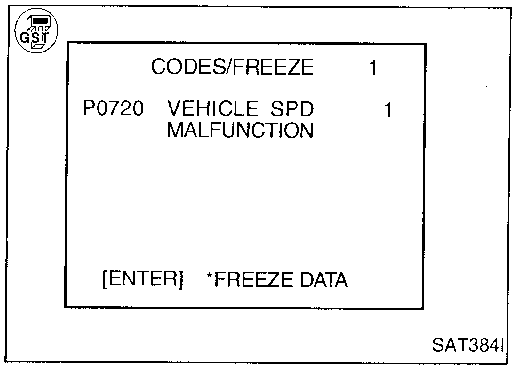

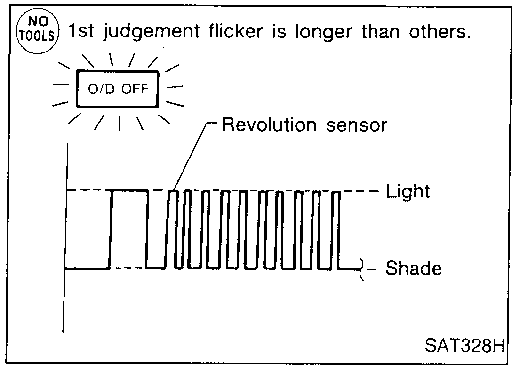

Vehicle Speed Sensor·A/T (Revolution sensor)

DESCRIPTION

The revolution sensor detects the revolution of the out put shaft parking pawl lock gear and emits a pulse signal. The pulse signal is sent to the A/T control unit which converts it into vehicle speed.

Diagnostic trouble code	Malfunction is detected when ...	Check item (Possible cause)
: VHCL SPEED SEN·A/T : P0720 : 1st judgement flicker	A/T control unit does not receive the proper voltage signal from the sensor.	• Harness or connectors (The sensor circuit is open or shorted.) • Revolution sensor

Diagnostic Trouble Code (DTC) confirmation procedure

After the repair, perform the following procedure to confirm the malfunction is eliminated.

1) Start engine.
2) Select "SELF-DIAG RESULTS" mode with CONSULT.
3) Drive vehicle under the following conditions:
Selector lever in "D", vehicle speed higher than 30 km/h (19 MPH), throttle opening greater than 1/8 of the full throttle position and driving for more than 5 seconds.

OR

1) Start engine.
2) Drive vehicle under the following conditions:
Selector lever in "D", vehicle speed higher than 30 km/h (19 MPH), throttle opening greater than 1/8 of the full throttle position and driving for more than 5 seconds.
3) Select "MODE 7" with GST.

OR

1) Start engine.
2) Drive vehicle under the following conditions:
Selector lever in "D", vehicle speed higher than 30 km/h (19 MPH), throttle opening greater than 1/8 of the full throttle position and driving for more than 5 seconds.
3) Perform self-diagnosis.
Refer to SELF-DIAGNOSTIC PROCEDURE (No Tools), AT-23.

Vehicle Speed Sensor·A/T (Revolution sensor) (Cont'd)

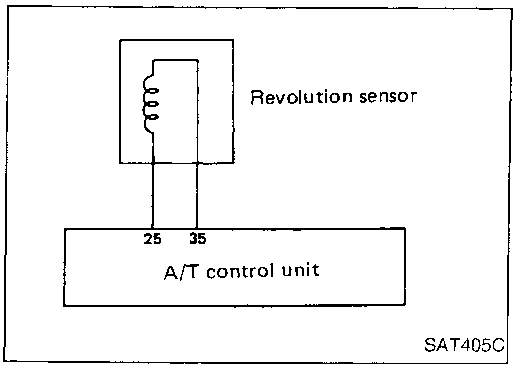

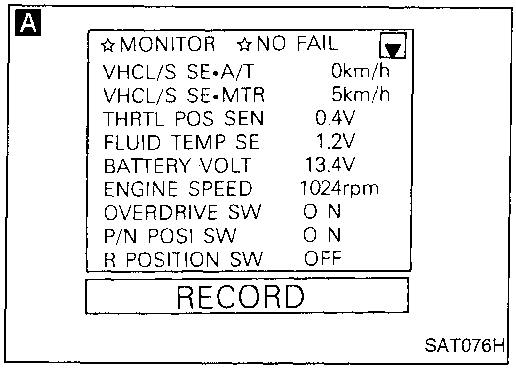

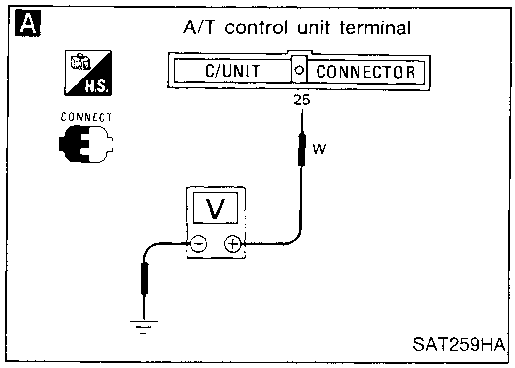

CHECK REVOLUTION SENSOR.
Refer to "Component Inspection" below.

NG → Repair or replace revolution sensor.

OK ↓

A

CHECK INPUT SIGNAL.

1. Start engine.
2. Select "ECU INPUT SIGNALS" in Data Monitor.
3. Read out the value of "VHCL/S SE·A/T" while driving. Check the value changes according to driving speed.

OR

1. Start engine.
2. Check voltage between A/T control unit terminal ㉕ and ground while driving. (Measure with AC range.)

Voltage:
At 0 km/h (0 MPH):
0V
At 30 km/h (19 MPH):
1V or more
(Voltage rises gradually in response to vehicle speed.)

NG → Check the following items:
- Harness for short or open between A/T control unit and revolution sensor (Main harness)
- Harness for short or open between revolution sensor and ECM (Main harness)
- Ground circuit for ECM Refer to EC section ("TROUBLE DIAGNOSIS FOR POWER SUPPLY").

OK ↓

Perform Diagnostic Trouble Code (DTC) confirmation procedure, AT-64.

NG → 1. Perform A/T control unit input/output signal inspection.
2. If NG, recheck A/T control unit pin terminals for damage or loose connection with harness connector.

OK ↓

INSPECTION END

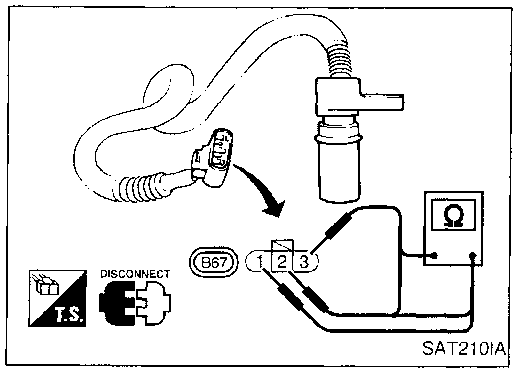

COMPONENT INSPECTION

Revolution sensor

- For removal, refer to AT-132.
- Check resistance between terminals ①, ② and ③.

Terminal No.		Resistance
①	②	500 - 650Ω
②	③	No continuity
①	③	No continuity

Engine Speed Signal

DESCRIPTION

The engine speed signal is sent from the ECM to the A/T control unit.

Diagnostic trouble code	Malfunction is detected when ...	Check item (Possible cause)
: ENGINE SPEED SIG : P0725 : 9th judgement flicker	A/T control unit does not receive the proper voltage signal from ECM.	• Harness or connectors (The sensor circuit is open or shorted.)

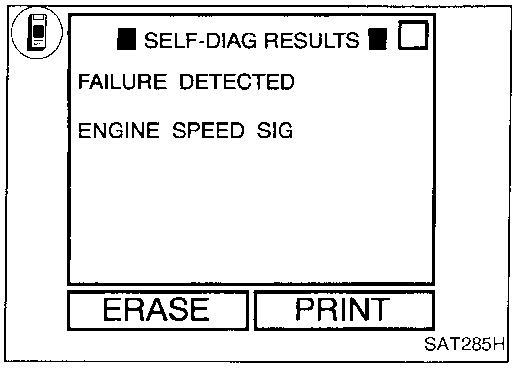

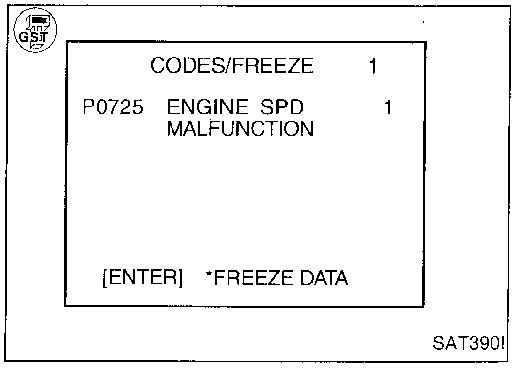

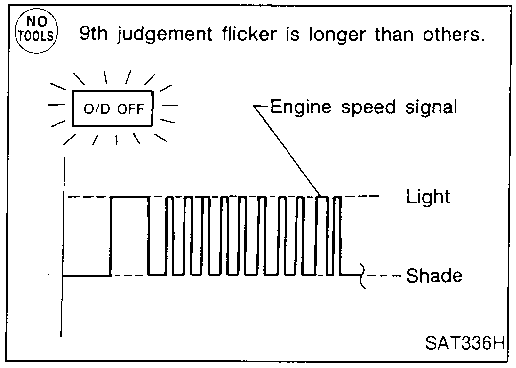

Diagnostic Trouble Code (DTC) confirmation procedure

After the repair, perform the following procedure to confirm the malfunction is eliminated.

1) Start engine.
2) Select "SELF-DIAG RESULTS" mode with CONSULT.
3) Drive vehicle under the following conditions:
   Selector lever in "D", vehicle speed higher than 10 km/h (6 MPH), throttle opening greater than 1/8 of the full throttle position and driving for more than 10 seconds.

OR

1) Start engine.
2) Drive vehicle under the following conditions:
   Selector lever in "D", vehicle speed higher than 10 km/h (6 MPH), throttle opening greater than 1/8 of the full throttle position and driving for more than 10 seconds.
3) Select "MODE 7" with GST.

OR

1) Start engine.
2) Drive vehicle under the following conditions:
   Selector lever in "D", vehicle speed higher than 10 km/h (6 MPH), throttle opening greater than 1/8 of the full throttle position and driving for more than 10 seconds.
3) Perform self-diagnosis.
   Refer to SELF-DIAGNOSTIC PROCEDURE (No Tools), AT-23.

Engine Speed Signal (Cont'd)

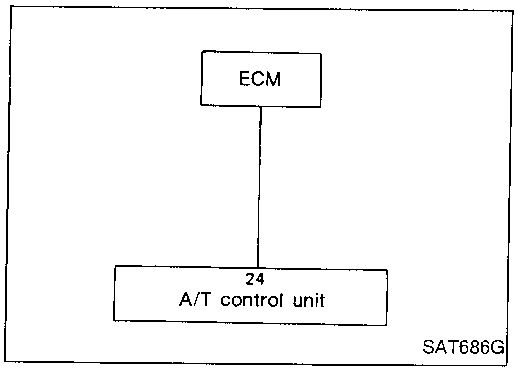

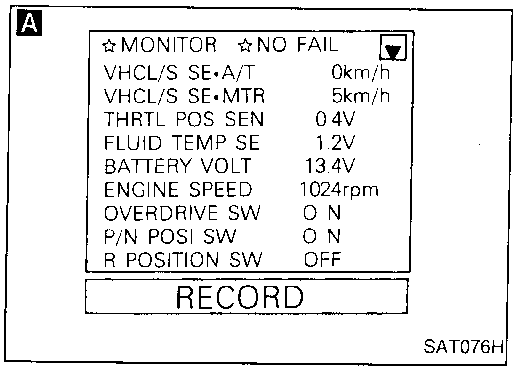

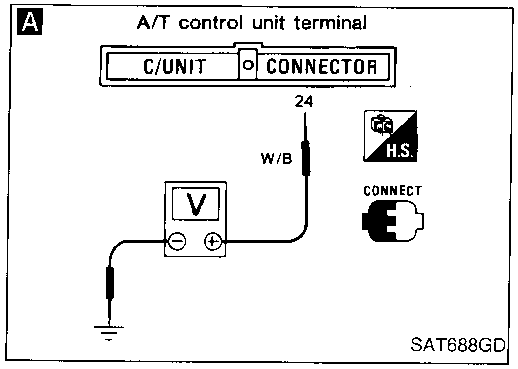

Perform diagnostic test mode II (self-diagnostic results) for engine control. Check ignition signal circuit condition.

NG → Check ignition signal circuit for engine control. Refer to EC section ["Ignition Signal (DTC: 0201)", TROUBLE DIAGNOSIS FOR DTC P1320"].

OK ↓

A

CHECK INPUT SIGNAL.

1. Start engine.
2. Select "ECU INPUT SIGNALS" in Data Monitor.
3. Read out the value of "ENGINE SPEED".
   Check engine speed changes according to throttle position.

OR

1. Start engine.
2. Check voltage between A/T control unit terminal ㉔ and ground.
   Voltage: 0.9 - 4.5V

NG → Check the following items:
- Harness for short or open between A/T control unit and ignition coil.
- Resistor
- Ignition coil
  Refer to EC section ["Ignition Signal (DTC: 0201)", "TROUBLE DIAGNOSIS FOR DTC P1320"].

OK ↓

Perform Diagnostic Trouble Code (DTC) confirmation procedure, AT-66.

NG → 1. Perform A/T control unit input/output signal inspection.
2. If NG, recheck A/T control unit pin terminals for damage or loose connection with harness connector.

OK ↓

INSPECTION END

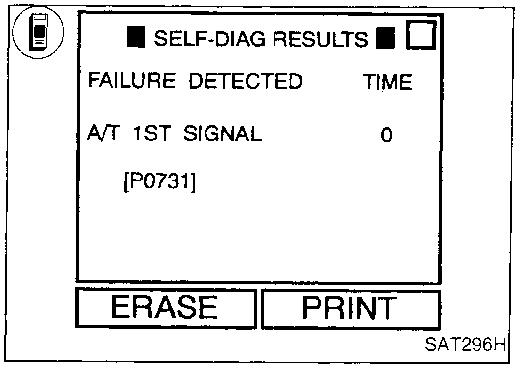

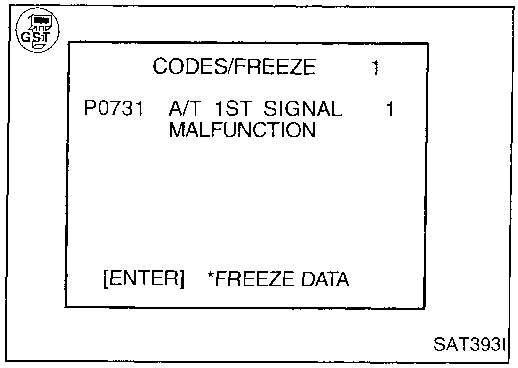

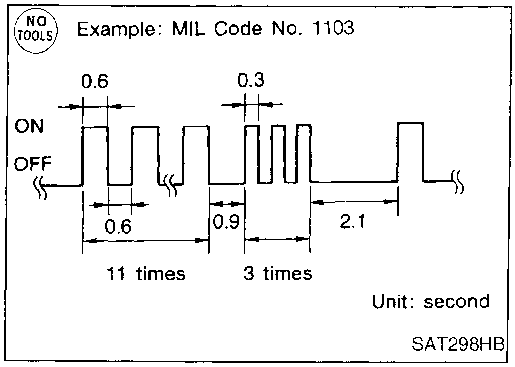

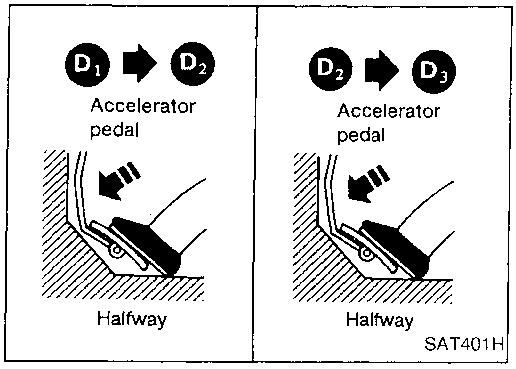

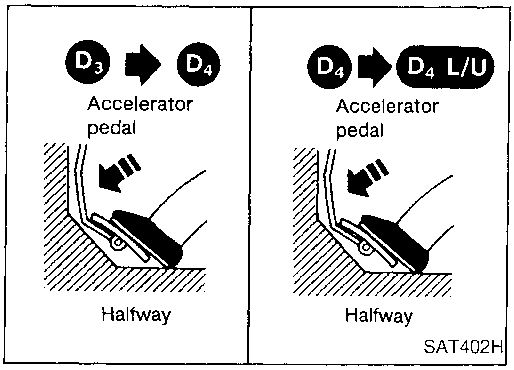

Improper Shifting to 1st Gear Position

DESCRIPTION

- This is one of the items indicated by the MIL.
- This malfunction will not be detected while the O/D OFF indicator lamp is indicating another self-diagnosis malfunction.
- This malfunction is detected when the A/T does not shift into first gear position as instructed by the A/T control unit. This is not caused by electrical malfunction (circuits open or shorted) but by mechanical malfunction such as control valve sticking, improper solenoid valve operation, etc.

Diagnostic trouble code	Malfunction is detected when ...	Check item (Possible cause)
: A/T 1ST SIGNAL : P0731 : MIL Code No. 1103	A/T cannot be shifted to the 1st gear position even if electrical circuit is good.	• Shift solenoid valve A • Shift solenoid valve B • Each clutch • Hydraulic control circuit

Diagnostic Trouble Code (DTC) confirmation procedure

After the repair, perform the following procedure to confirm the malfunction is eliminated.

1) Start engine and warm up ATF.
2) Select "SELF-DIAG RESULTS" mode for ECM with CONSULT.
3) Start vehicle with selector lever in "D" and throttle opening halfway. Check that vehicle runs through gear shift of $D_1 \rightarrow D_2 \rightarrow D_3 \rightarrow D_4$, in accordance with shift schedule. Refer to shift schedule, AT-45.

OR

1) Start engine and warm up ATF.
2) Start vehicle with selector lever in "D" and throttle opening halfway. Check that vehicle runs through gear shift of $D_1 \rightarrow D_2 \rightarrow D_3 \rightarrow D_4$, in accordance with shift schedule. Refer to shift schedule, AT-45.
3) Select "MODE 7" with GST.

OR

1) Start engine and warm up ATF.
2) Start vehicle with selector lever in "D" and throttle opening halfway. Check that vehicle runs through gear shift of $D_1 \rightarrow D_2 \rightarrow D_3 \rightarrow D_4$, in accordance with shift schedule. Refer to shift schedule, AT-45.
3) Perform self-diagnosis for ECM.
Refer to EC section ["Malfunction Indicator Lamp (MIL)", "ON BOARD DIAGNOSTIC SYSTEM DESCRIPTION"].

Improper Shifting to 1st Gear Position (Cont'd)

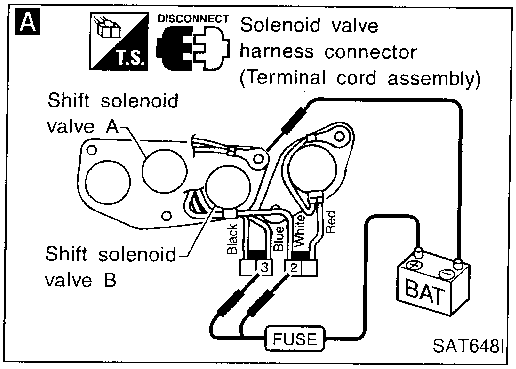

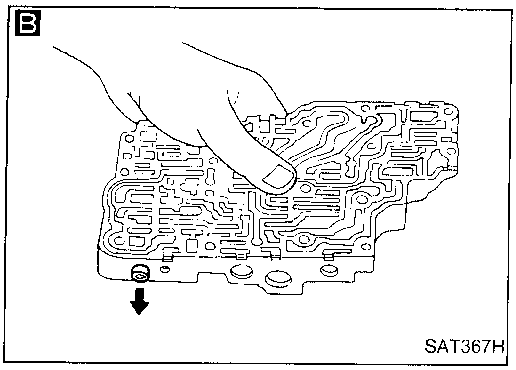

A

CHECK SHIFT SOLENOID VALVE.
1. Remove control valve assembly. Refer to AT-132.
2. Check shift solenoid valve operation.
   - Shift solenoid valve A
   - Shift solenoid valve B

   Refer to "Component Inspection" on next page.

NG → Repair or replace shift solenoid valve assembly.

OK ↓

B

CHECK CONTROL VALVE.
1. Disassemble control valve assembly. Refer to "Control Valve Assembly", AT-157.
2. Check to ensure that:
   - Valve, sleeve and plug slide along valve bore under their own weight.
   - Valve, sleeve and plug are free from burrs, dents and scratches.
   - Control valve springs are free from damage, deformation and fatigue.
   - Hydraulic line is free from obstacles.

NG → Repair control valve assembly.

OK ↓

Perform Diagnostic Trouble Code (DTC) confirmation procedure, AT-68.

NG → Check control valve again. Repair or replace control valve assembly.

OK ↓

INSPECTION END

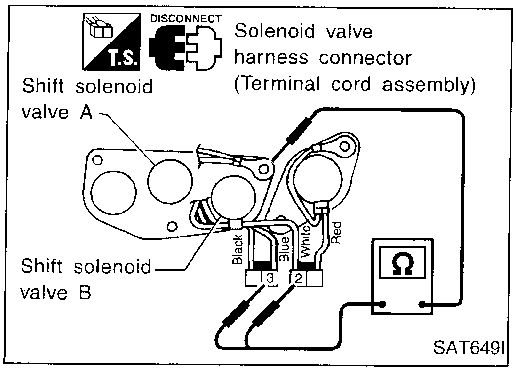

COMPONENT INSPECTION

Shift solenoid valve A and B

- For removal, refer to AT-132.

Resistance check

- Check resistance between two terminals.

Solenoid valve	Terminal No.		Resistance (Approx.)
Shift solenoid valve A	③	Ground	20 - 40Ω
Shift solenoid valve B	②		

Improper Shifting to 1st Gear Position (Cont'd)

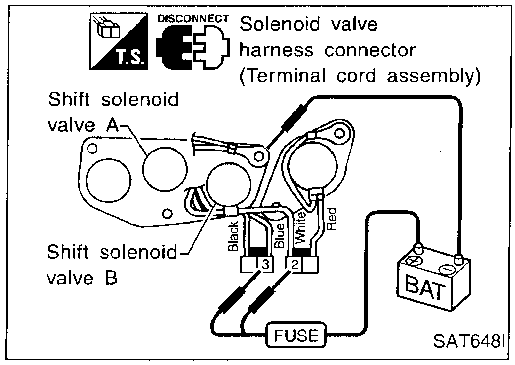

Operation check

- Check solenoid valve by listening for its operating sound while applying battery voltage to the terminal and ground.

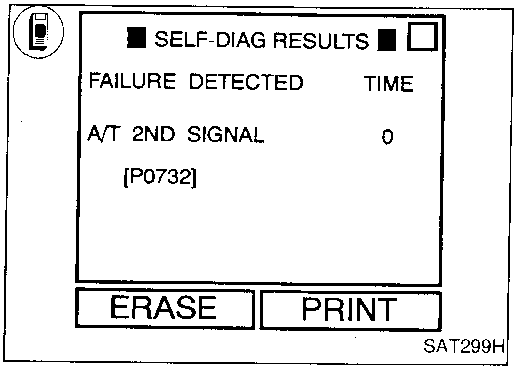

SAT299H

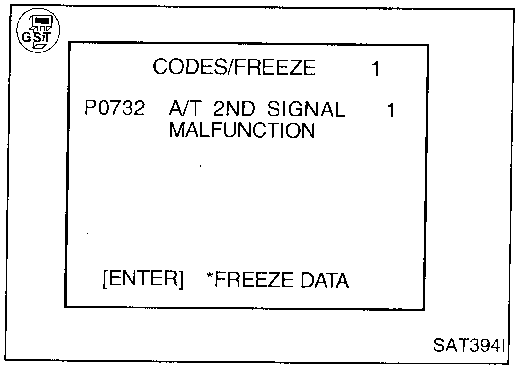

SAT394I

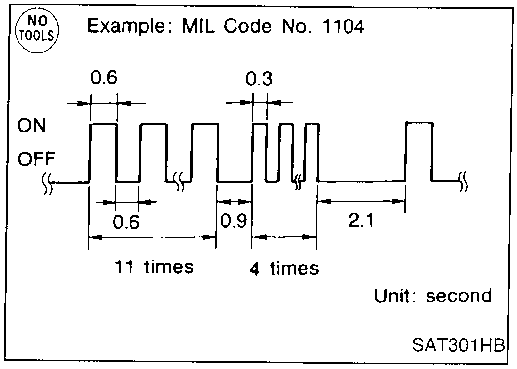

SAT301HB

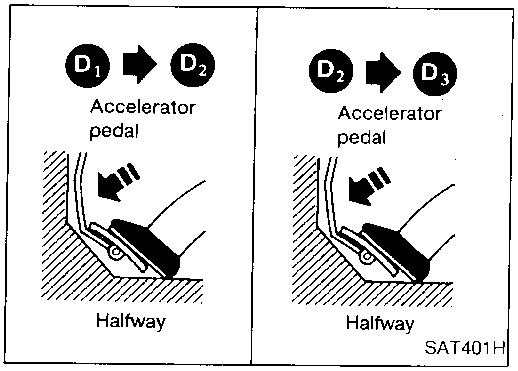

SAT401H

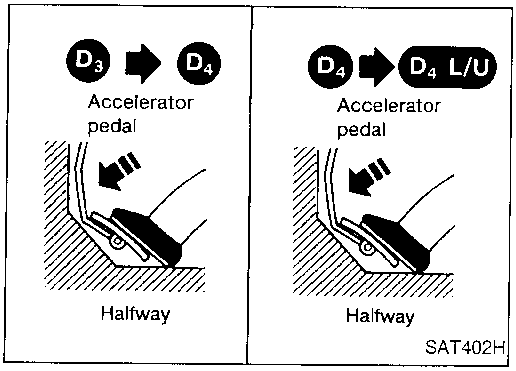

SAT402H

Improper Shifting to 2nd Gear Position

DESCRIPTION

- This is one of the items indicated by the MIL.
- This malfunction will not be detected while the O/D OFF indicator lamp is indicating another self-diagnosis malfunction.
- This malfunction is detected when the A/T does not shift into second gear position as instructed by the A/T control unit. This is not caused by electrical malfunction (circuits open or shorted) but by mechanical malfunction such as control valve sticking, improper solenoid valve operation, etc.

Diagnostic trouble code	Malfunction is detected when ...	Check item (Possible cause)
: A/T 2ND SIGNAL : P0732 : MIL Code No. 1104	A/T cannot be shifted to the 2nd gear position even if electrical circuit is good.	• Shift solenoid valve B • Each clutch • Hydraulic control circuit

Diagnostic Trouble Code (DTC) confirmation procedure

After the repair, perform the following procedure to confirm the malfunction is eliminated.

1) Start engine and warm up ATF.
2) Select "SELF-DIAG RESULTS" mode for ECM with CONSULT.
3) Start vehicle with selector lever in "D" and throttle opening halfway. Check that vehicle runs through gear shift of $D_1 \rightarrow D_2 \rightarrow D_3 \rightarrow D_4$, in accordance with shift schedule. Refer to shift schedule, AT-45.

OR

1) Start engine and warm up ATF.
2) Start vehicle with selector lever in "D" and throttle opening halfway. Check that vehicle runs through gear shift of $D_1 \rightarrow D_2 \rightarrow D_3 \rightarrow D_4$, in accordance with shift schedule. Refer to shift schedule, AT-45.
3) Select "MODE 7" with GST.

OR

1) Start engine and warm up ATF.
2) Start vehicle with selector lever in "D" and throttle opening halfway. Check that vehicle runs through gear shift of $D_1 \rightarrow D_2 \rightarrow D_3 \rightarrow D_4$, in accordance with shift schedule. Refer to shift schedule, AT-45.
3) Perform self-diagnosis for ECM.
Refer to EC section ["Malfunction Indicator Lamp (MIL)", "ON BOARD DIAGNOSTIC SYSTEM DESCRIPTION"].

Improper Shifting to 2nd Gear Position (Cont'd)

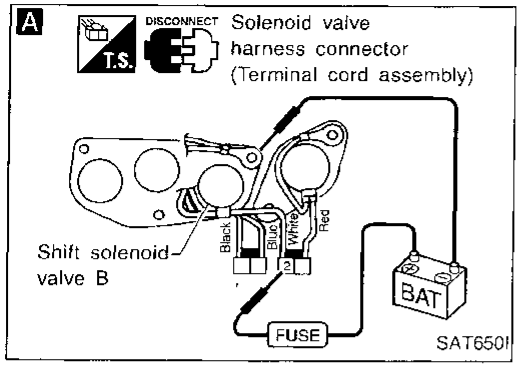

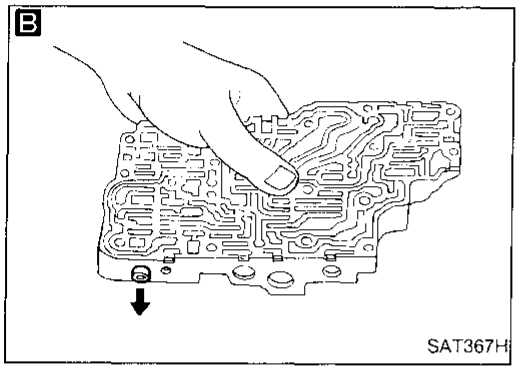

A

CHECK SHIFT SOLENOID VALVE.
1. Remove control valve assembly. Refer to AT-132.
2. Check shift solenoid valve operation.
   - Shift solenoid valve B

   Refer to "Component Inspection" below.

NG → Repair or replace shift solenoid valve assembly.

OK ↓

B

CHECK CONTROL VALVE.
1. Disassemble control valve assembly. Refer to "Control Valve Assembly", AT-157.
2. Check to ensure that:
   - Valve, sleeve and plug slide along valve bore under their own weight.
   - Valve, sleeve and plug are free from burrs, dents and scratches.
   - Control valve springs are free from damage, deformation and fatigue.
   - Hydraulic line is free from obstacles.

NG → Repair control valve assembly.

OK ↓

Perform Diagnostic Trouble Code (DTC) confirmation procedure, AT-71.

NG → Check control valve again. Repair or replace control valve assembly.

OK ↓

INSPECTION END

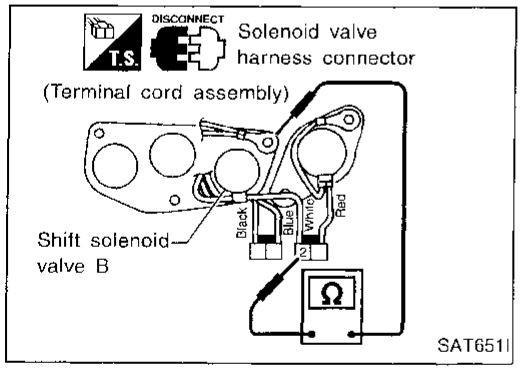

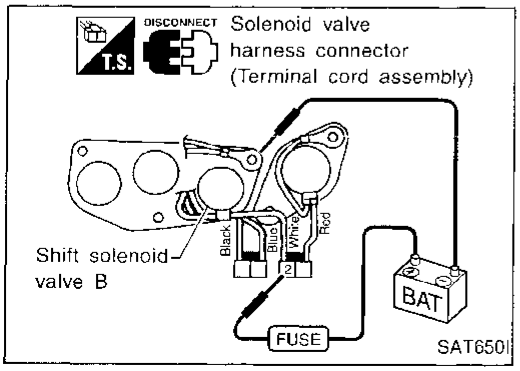

COMPONENT INSPECTION

Shift solenoid valve B

- For removal, refer to AT-132.

Resistance check

- Check resistance between two terminals.

Solenoid valve	Terminal No.		Resistance (Approx.)
Shift solenoid valve B	②	Ground	20 - 40Ω

Operation check

- Check solenoid valve by listening for its operating sound while applying battery voltage to the terminal and ground.

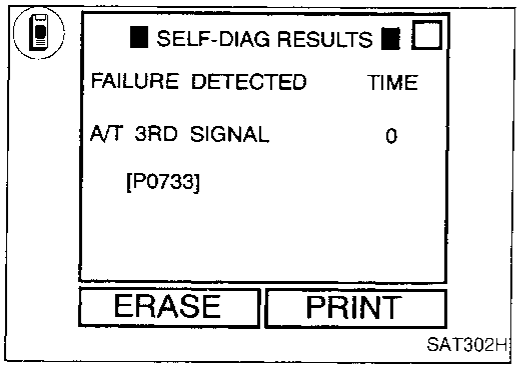

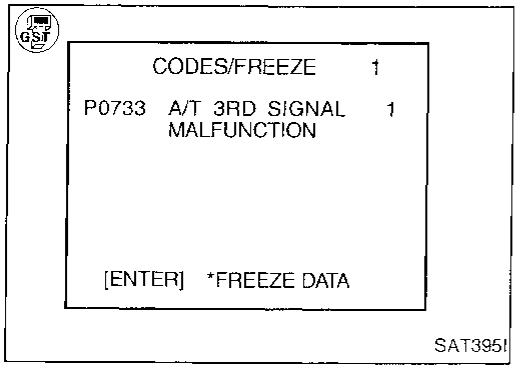

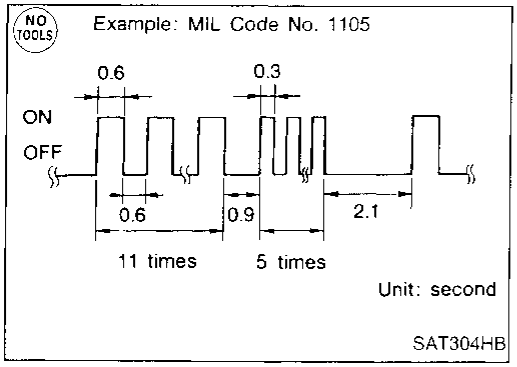

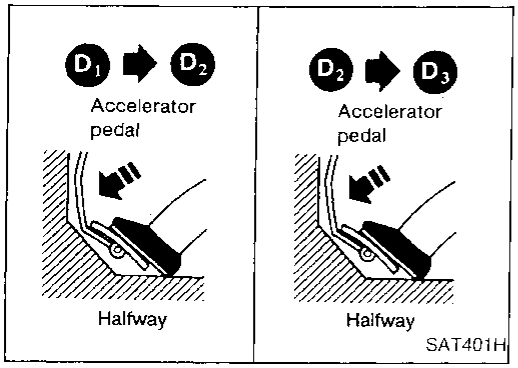

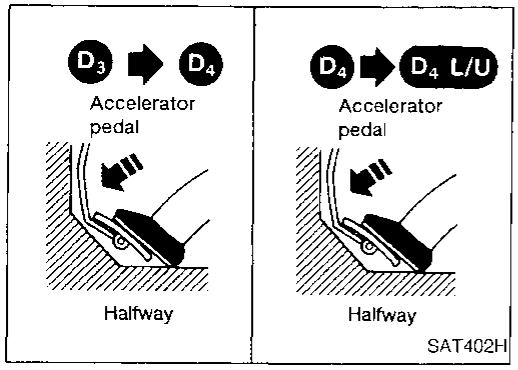

Improper Shifting to 3rd Gear Position

DESCRIPTION

- This is one of the items indicated by the MIL.
- This malfunction will not be detected while the O/D OFF indicator lamp is indicating another self-diagnosis malfunction.
- This malfunction is detected when the A/T does not shift into third gear position as instructed by the A/T control unit. This is not caused by electrical malfunction (circuits open or shorted) but by mechanical malfunction such as control valve sticking, improper solenoid valve operation, malfunctioning servo piston or brake band, etc.

Diagnostic trouble code	Malfunction is detected when ...	Check item (Possible cause)
: A/T 3RD SIGNAL : P0733 : MIL Code No. 1105	A/T cannot be shifted to the 3rd gear position even if electrical circuit is good.	• Shift solenoid valve A • Each clutch • Hydraulic control circuit

Diagnostic Trouble Code (DTC) confirmation procedure

After the repair, perform the following procedure to confirm the malfunction is eliminated.

1) Start engine and warm up ATF.
2) Select "SELF-DIAG RESULTS" mode for ECM with CONSULT.
3) Start vehicle with selector lever in "D" and throttle opening halfway. Check that vehicle runs through gear shift of $D_1 \rightarrow D_2 \rightarrow D_3 \rightarrow D_4$, in accordance with shift schedule. Refer to shift schedule, AT-45.

— OR —

1) Start engine and warm up ATF.
2) Start vehicle with selector lever in "D" and throttle opening halfway. Check that vehicle runs through gear shift of $D_1 \rightarrow D_2 \rightarrow D_3 \rightarrow D_4$, in accordance with shift schedule. Refer to shift schedule, AT-45.
3) Select "MODE 7" with GST.

— OR —

1) Start engine and warm up ATF.
2) Start vehicle with selector lever in "D" and throttle opening halfway. Check that vehicle runs through gear shift of $D_1 \rightarrow D_2 \rightarrow D_3 \rightarrow D_4$, in accordance with shift schedule. Refer to shift schedule, AT-45.
3) Perform self-diagnosis for ECM.
Refer to EC section ["Malfunction Indicator Lamp (MIL)", "ON BOARD DIAGNOSTIC SYSTEM DESCRIPTION"].

Improper Shifting to 3rd Gear Position (Cont'd)

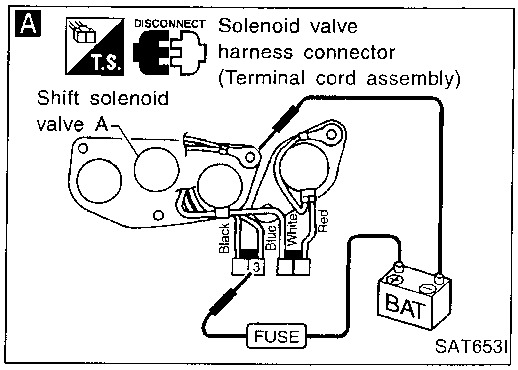

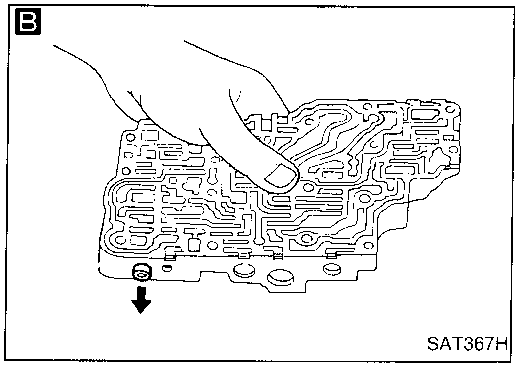

A

CHECK SHIFT SOLENOID VALVE.
1. Remove control valve assembly. Refer to AT-132.
2. Check shift solenoid valve operation.
   - Shift solenoid valve A
   Refer to "Component Inspection" below.

NG → Repair or replace shift solenoid valve assembly.

OK ↓

B

CHECK CONTROL VALVE.
1. Disassemble control valve assembly. Refer to "Control Valve Assembly", AT-157.
2. Check to ensure that:
   - Valve, sleeve and plug slide along valve bore under their own weight.
   - Valve, sleeve and plug are free from burrs, dents and scratches.
   - Control valve springs are free from damage, deformation and fatigue.
   - Hydraulic line is free from obstacles.

NG → Repair control valve assembly.

OK ↓

Perform Diagnostic Trouble Code (DTC) confirmation procedure, AT-73.

NG → Check control valve again. Repair or replace control valve assembly.

OK ↓

INSPECTION END

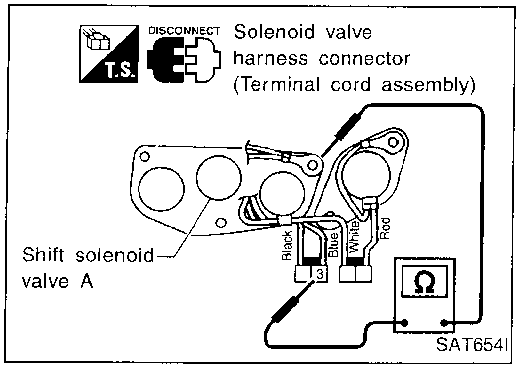

COMPONENT INSPECTION

Shift solenoid valve A

- For removal, refer to AT-132.

Resistance check

- Check resistance between two terminals.

Solenoid valve	Terminal No.		Resistance (Approx.)
Shift solenoid valve A	③	Ground	20 - 40Ω

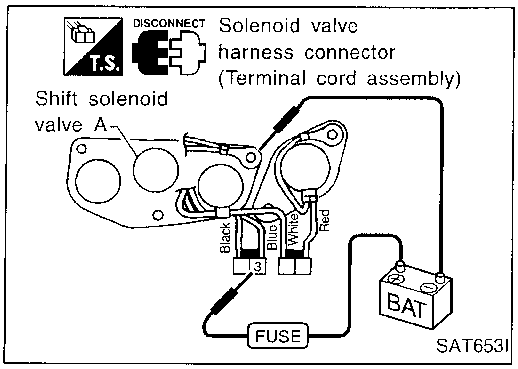

Operation check

- Check solenoid valve by listening for its operating sound while applying battery voltage to the terminal and ground.

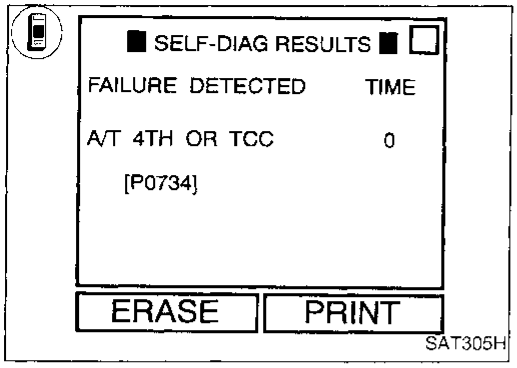

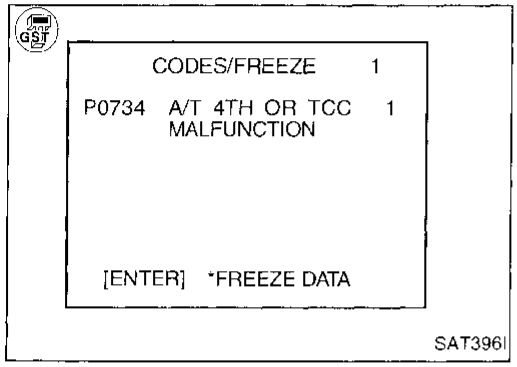

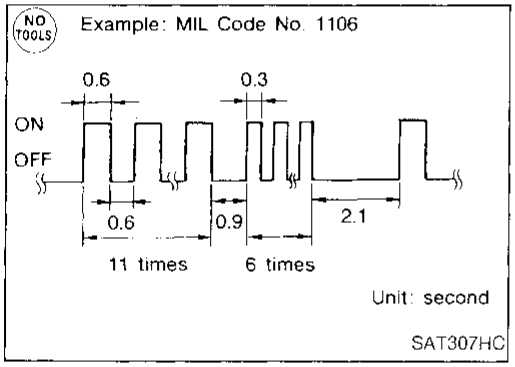

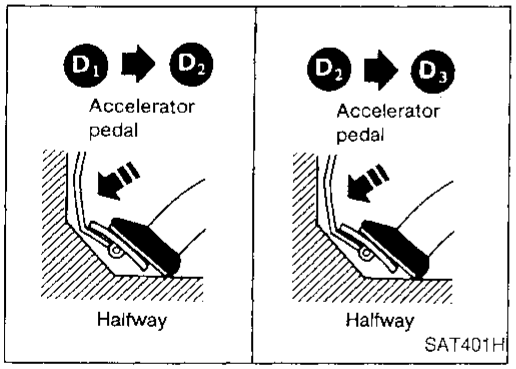

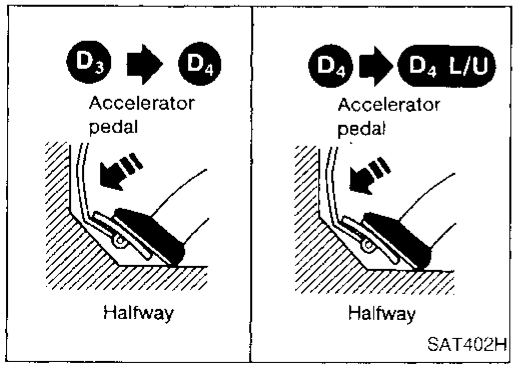

Improper Shifting to 4th Gear Position

DESCRIPTION

- This is one of the items indicated by the MIL.
- This malfunction will not be detected while the O/D OFF indicator lamp is indicating another self-diagnosis malfunction.
- This malfunction is detected when the A/T does not shift into fourth gear position or the torque converter clutch does not lock up as instructed by the A/T control unit. This is not caused by electrical malfunction (circuits open or shorted) but by mechanical malfunction such as control valve sticking, improper solenoid valve operation, malfunctioning oil pump or torque converter clutch, etc.

Diagnostic trouble code	Malfunction is detected when ...	Check item (Possible cause)
: A/T 4TH SIGNAL : P0734 : MIL Code No. 1106	A/T cannot be shifted to the 4th gear position even if electrical circuit is good.	• Shift solenoid valve A • Shift solenoid valve B • Overrun clutch solenoid valve • Line pressure solenoid valve • Each clutch • Hydraulic control circuit

Diagnostic Trouble Code (DTC) confirmation procedure

After the repair, perform the following procedure to confirm the malfunction is eliminated.

1) Start engine and warm up ATF.
2) Select "SELF-DIAG RESULTS" mode for ECM with CONSULT.
3) Start vehicle with selector lever in "D" and throttle opening halfway. Check that vehicle runs through gear shift of $D_1 \rightarrow D_2 \rightarrow D_3 \rightarrow D_4 \rightarrow D_4$ lock-up, in accordance with shift schedule. Refer to shift schedule, AT-45.

OR

1) Start engine and warm up ATF.
2) Start vehicle with selector lever in "D" and throttle opening halfway. Check that vehicle runs through gear shift of $D_1 \rightarrow D_2 \rightarrow D_3 \rightarrow D_4 \rightarrow D_4$ lock-up, in accordance with shift schedule. Refer to shift schedule, AT-45.
3) Select "MODE 7" with GST.

OR

1) Start engine and warm up ATF.
2) Start vehicle with selector lever in "D" and throttle opening halfway. Check that vehicle runs through gear shift of $D_1 \rightarrow D_2 \rightarrow D_3 \rightarrow D_4 \rightarrow D_4$ lock-up, in accordance with shift schedule. Refer to shift schedule, AT-45.
3) Perform self-diagnosis for ECM.
Refer to EC section ["Malfunction Indicator Lamp (MIL)", "ON BOARD DIAGNOSTIC SYSTEM DESCRIPTION"].

Improper Shifting to 4th Gear Position (Cont'd)

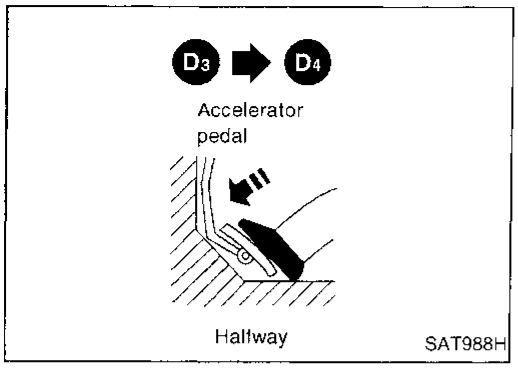

During "Cruise test – Part 1" (AT-41), does A/T shift from D_3 to D_4 at the specified speed?

- Yes → Go to Ⓑ and check for proper lock-up.
- No ↓

Perform pressure test. Refer to AT-123.

- NG → Go to Ⓐ.
- OK ↓

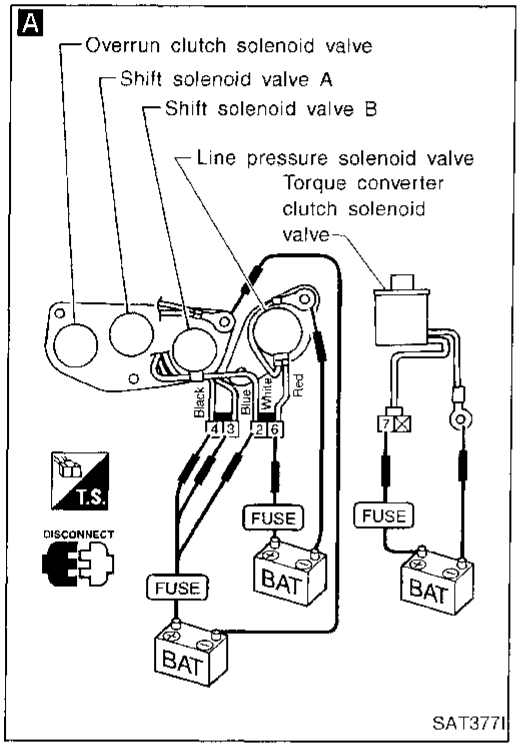

A

CHECK SOLENOID VALVES.

1. Remove control valve assembly. Refer to AT-132.
2. Refer to "Component Inspection", AT-79.

- NG → Replace solenoid valve assembly.
- OK ↓

B

CHECK CONTROL VALVE.

1. Disassemble control valve assembly. Refer to AT-157.
2. Check to ensure that:
   - Valve, sleeve and plug slide along valve bore under their own weight.
   - Valve, sleeve and plug are free from burrs, dents and scratches.
   - Control valve springs are free from damage, deformation and fatigue.
   - Hydraulic line is free from obstacles.

- NG → Repair control valve.
- OK ↓

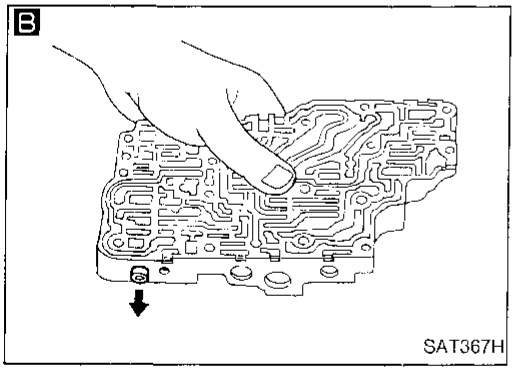

Does A/T shift from D_3 to D_4 at the specified speed?

- NG → Check control valve again. Repair or replace control valve assembly.
- OK ↓

Perform Diagnostic Trouble Code (DTC) confirmation procedure (AT-75).

- NG → Go to Ⓑ and check for proper lock-up.
- OK ↓

INSPECTION END

Improper Shifting to 4th Gear Position (Cont'd)

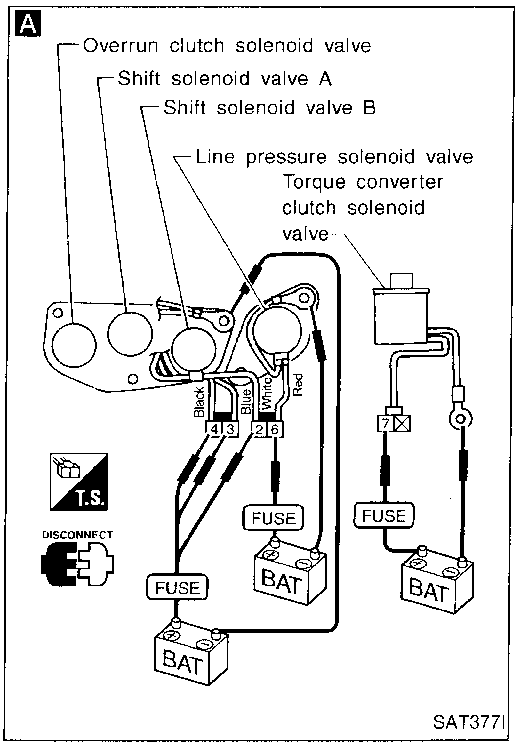

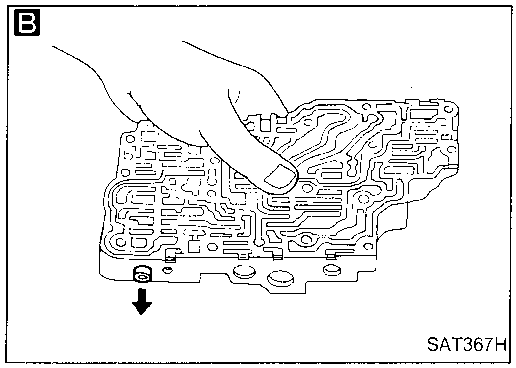

Ⓐ

A

CHECK LINE PRESSURE SOLENOID VALVE.
1. Remove control valve assembly. Refer to AT-132.
2. Refer to "Component Inspection", AT-79.

NG → Replace solenoid valve assembly.

OK ↓

B

CHECK CONTROL VALVE.
1. Disassemble control valve assembly. Refer to AT-157.
2. Check line pressure circuit valves for sticking.
- Pressure regulator valve
- Pilot valve
- Pressure modifier valve

NG → Repair control valve.

OK ↓

Does A/T shift from D_3 to D_4 at the specified speed?

NG → Check control valve again. Repair or replace control valve assembly.

OK ↓

Perform Diagnostic Trouble Code (DTC) confirmation procedure, AT-75.

NG → Go to Ⓑ and check for proper lock-up.

OK ↓

INSPECTION END

Improper Shifting to 4th Gear Position (Cont'd)

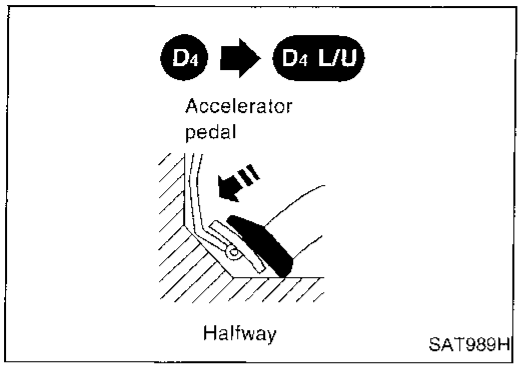

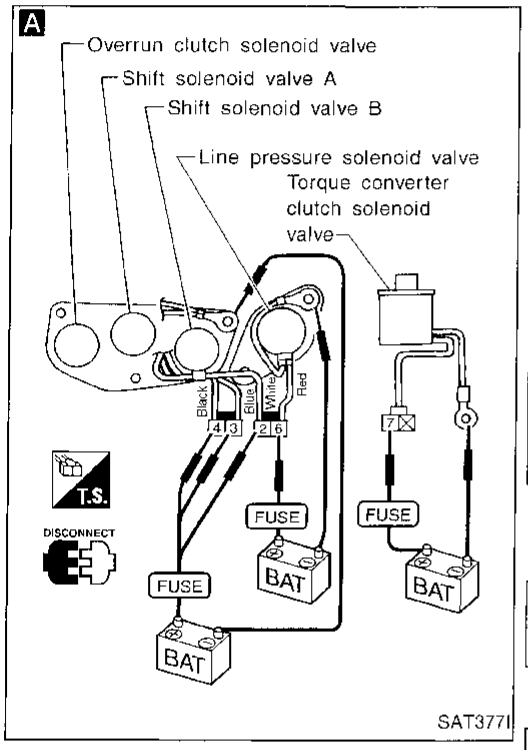

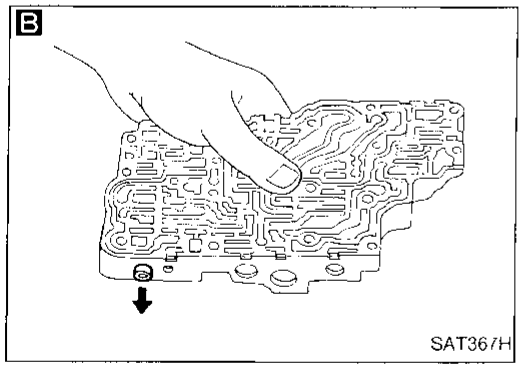

Ⓑ

During "Cruise test – Part 1" (AT-41), does A/T perform lock-up at the specified speed?
- Yes → Perform "Cruise test – Part 1" again and return to the start point of this flow chart.
- No ↓

A

CHECK TORQUE CONVERTER CLUTCH SOLENOID VALVE.
1. Remove control valve assembly. Refer to AT-132.
2. Refer to "Component Inspection", AT-79.

- NG → Replace solenoid valve assembly.
- OK ↓

B

CHECK CONTROL VALVE.
1. Disassemble control valve assembly. Refer to AT-157.
2. Check control valves for sticking.
- Torque converter clutch control valve
- Torque converter clutch relief valve

- NG → Repair control valve
- OK ↓

Does A/T perform lock-up at the specified speed?
- No → Check control valve again. Repair or replace control valve assembly.
- Yes ↓

Perform Diagnostic Trouble Code (DTC) confirmation procedure, AT-75.
- NG → Perform "Cruise test — Part 1" again and return to the start point of this flow chart.
- OK ↓

INSPECTION END

Improper Shifting to 4th Gear Position (Cont'd)

COMPONENT INSPECTION

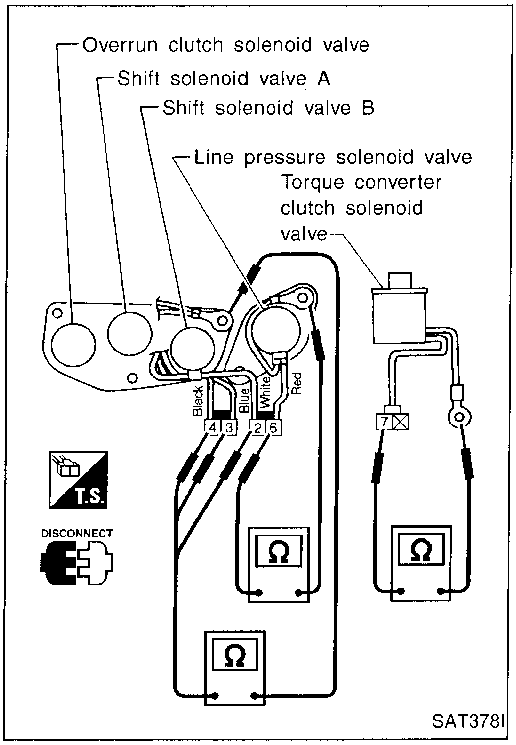

Solenoid valves

- For removal, refer to AT-132.

Resistance check

- Check resistance between two terminals.

Solenoid valve	Terminal No.		Resistance (Approx.)
Shift solenoid valve A	③	Ground	20 - 40Ω
Shift solenoid valve B	②		
Overrun clutch solenoid valve	④		
Line pressure solenoid valve	⑥		2.5 - 5Ω
Torque converter clutch solenoid valve	⑦		10 - 16Ω

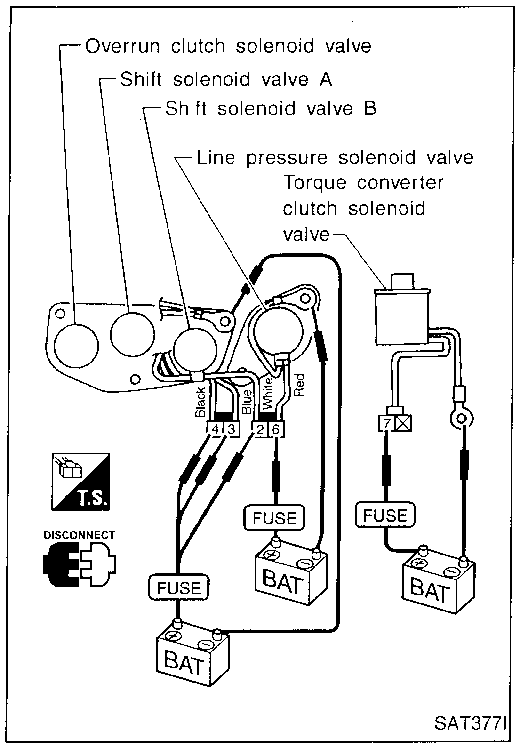

Operation check

- Check solenoid valve by listening for its operating sound while applying battery voltage to the terminal and ground.

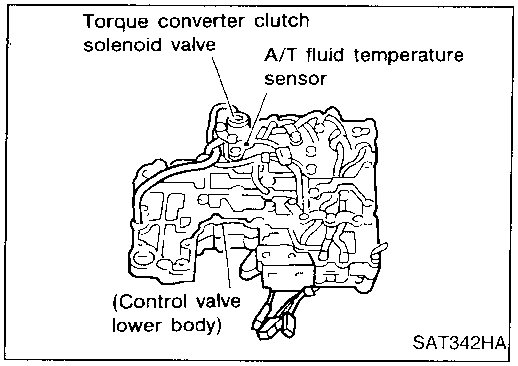

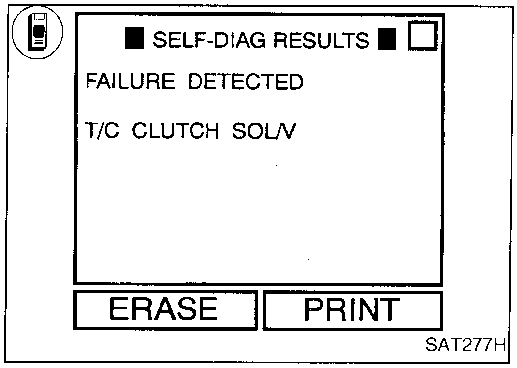

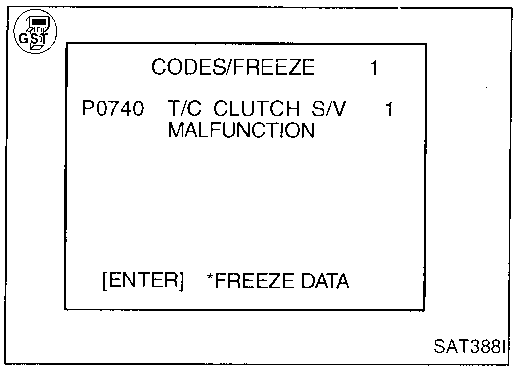

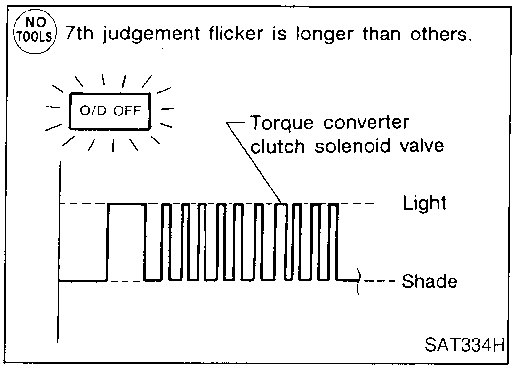

Torque Converter Clutch Solenoid Valve

DESCRIPTION

The torque converter clutch solenoid valve is activated, with the gear in D_4, by the A/T control unit in response to signals sent from the vehicle speed and throttle position sensors. Lock-up piston operation will then be controlled.
Lock-up operation, however, is prohibited when A/T fluid temperature is too low.

Diagnostic trouble code	Malfunction is detected when ...	Check item (Possible cause)
: T/C CLUTCH SOL/V : P0740 : 7th judgement flicker	A/T control unit detects an improper voltage drop when it tires to operate the solenoid valve.	• Harness or connectors (The solenoid circuit is open or shorted.) • T/C clutch solenoid valve

Diagnostic Trouble Code (DTC) confirmation procedure

After the repair, perform the following procedure to confirm the malfunction is eliminated.

1) Start engine.
2) Select "SELF-DIAG RESULTS" mode with CONSULT.
3) Drive vehicle in $D_1 \rightarrow D_2 \rightarrow D_3 \rightarrow D_4 \rightarrow D_4$ lock-up position.

OR

1) Start engine.
2) Drive vehicle in $D_1 \rightarrow D_2 \rightarrow D_3 \rightarrow D_4 \rightarrow D_4$ lock-up position.
3) Select "MODE 7" with GST.

OR

1) Start engine.
2) Drive vehicle in $D_1 \rightarrow D_2 \rightarrow D_3 \rightarrow D_4 \rightarrow D_4$ lock-up position.
3) Perform self-diagnosis.
Refer to SELF-DIAGNOSTIC PROCEDURE (No Tools), AT-23.

Torque Converter Clutch Solenoid Valve (Cont'd)

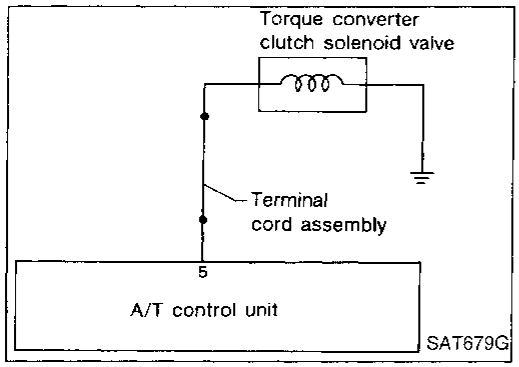

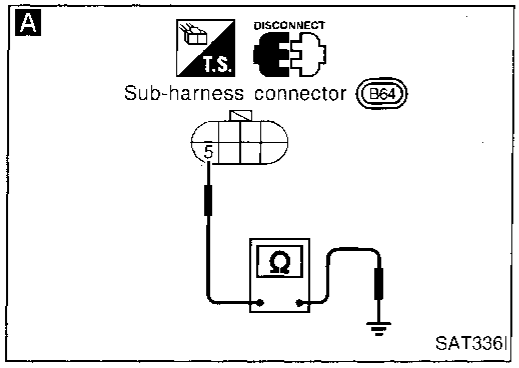

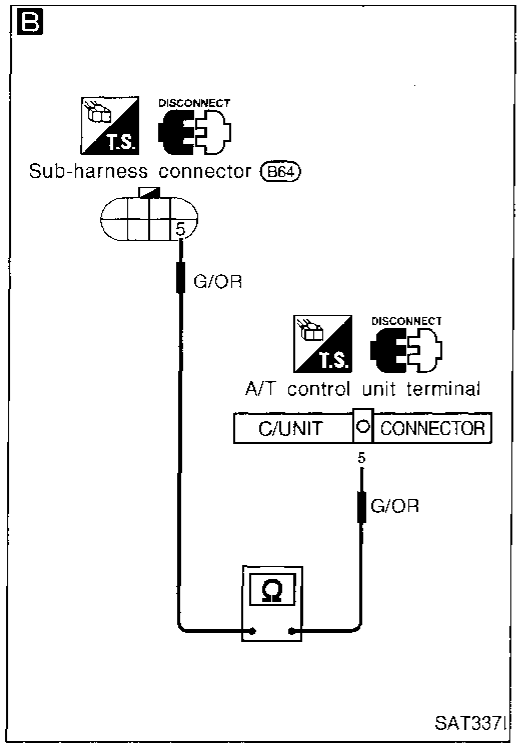

A

CHECK GROUND CIRCUIT.
1. Turn ignition switch to "OFF" position.
2. Disconnect terminal cord assembly connector in engine compartment.
3. Check resistance between terminal ⑤ and ground.
   Resistance: 10 - 20Ω

NG →
1. Remove oil pan. Refer to AT-132.
2. Check the following items:
   - Torque converter clutch solenoid valve
     Refer to "Component Inspection" on next page.
   - Harness of terminal cord assembly for short or open

OK ↓

B

CHECK POWER SOURCE CIRCUIT.
1. Turn ignition switch to "OFF" position.
2. Disconnect A/T control unit harness connector.
3. Check resistance between terminal ⑤ and A/T control unit harness connector terminal ⑤.
   Resistance:
   Approximately 0Ω
4. Reinstall any part removed.

NG → Repair or replace harness between A/T control unit and terminal cord assembly. (Main harness)

OK ↓

Perform Diagnostic Trouble Code (DTC) confirmation procedure, AT-80.

NG →
1. Perform A/T control unit input/output signal inspection.
2. If NG, recheck A/T control unit pin terminals for damage or loose connection with harness connector.

OK ↓

INSPECTION END

Torque Converter Clutch Solenoid Valve (Cont'd)

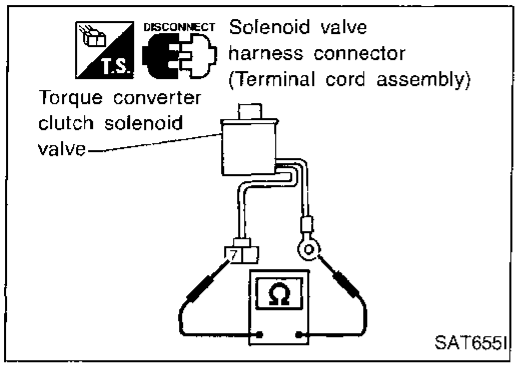

COMPONENT INSPECTION

Torque converter clutch solenoid valve

- For removal, refer to AT-132.

Resistance check

- Check resistance between two terminals.

Solenoid valve	Terminal No.		Resistance (Approx.)
Torque converter clutch solenoid valve	⑦	Ground	10 - 16Ω

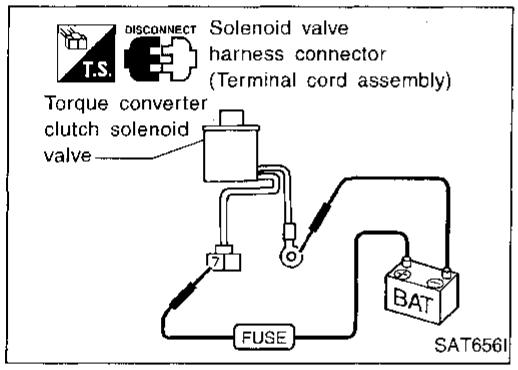

Operation check

- Check solenoid valve by listening for its operating sound while applying battery voltage to the terminal and ground.

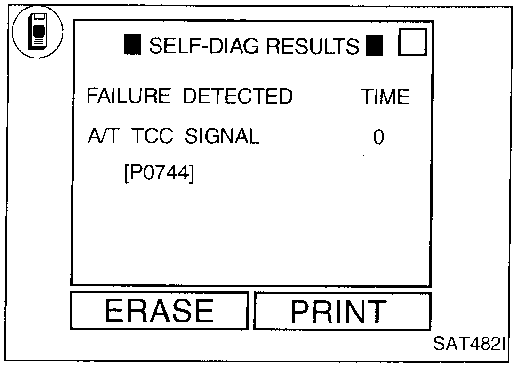

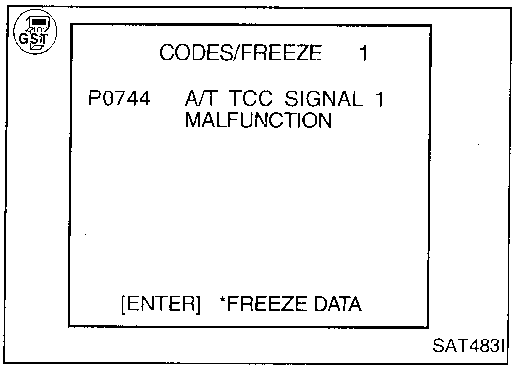

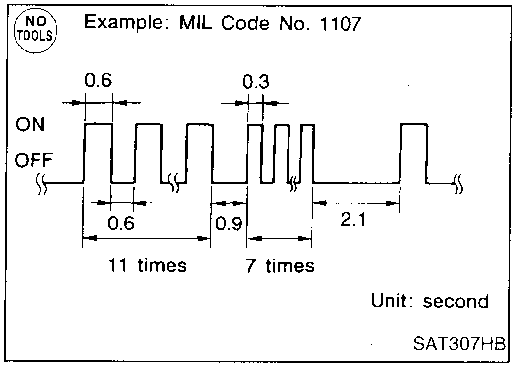

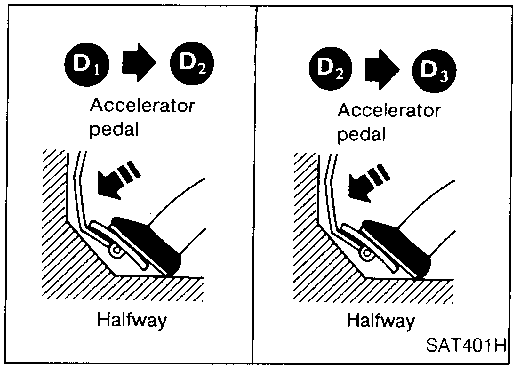

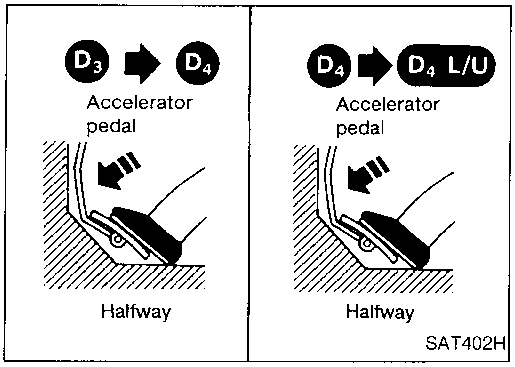

Improper Lock-up Operation

DESCRIPTION

- This is one of the items indicated by the MIL.
- This malfunction will not be detected while the O/D OFF indicator lamp is indicating another self-diagnosis malfunction.
- This malfunction is detected when the A/T does not shift into fourth gear position or the torque converter clutch does not lock up as instructed by the A/T control unit. This is not caused by electrical malfunction (circuits open or shorted) but by mechanical malfunction such as control valve sticking, improper solenoid valve operation, malfunctioning oil pump or torque converter clutch, etc.

Diagnostic trouble code	Malfunction is detected when ...	Check item (Possible cause)
: A/T TCC SIGNAL : P0744 : MIL Code No. 1107	A/T cannot perform lock-up even if electrical circuit is good.	• Torque converter clutch solenoid valve • Each clutch • Hydraulic control circuit

Diagnostic Trouble Code (DTC) confirmation procedure

After the repair, perform the following procedure to confirm the malfunction is eliminated.

1) Start engine and warm up ATF.
2) Select "SELF-DIAG RESULTS" mode for ECM with CONSULT.
3) Start vehicle with selector lever in "D" and throttle opening halfway. Check that vehicle runs through gear shift of $D_1 \rightarrow D_2 \rightarrow D_3 \rightarrow D_4 \rightarrow D_4$ lock-up, in accordance with shift schedule. Refer to shift schedule, AT-45.

OR

1) Start engine and warm up ATF.
2) Start vehicle with selector lever in "D" and throttle opening halfway. Check that vehicle runs through gear shift of $D_1 \rightarrow D_2 \rightarrow D_3 \rightarrow D_4 \rightarrow D_4$ lock-up, in accordance with shift schedule. Refer to shift schedule, AT-45.
3) Select "MODE 7" with GST.

OR

1) Start engine and warm up ATF.
2) Start vehicle with selector lever in "D" and throttle opening halfway. Check that vehicle runs through gear shift of $D_1 \rightarrow D_2 \rightarrow D_3 \rightarrow D_4 \rightarrow D_4$ lock-up, in accordance with shift schedule. Refer to shift schedule, AT-45.
3) Perform self-diagnosis for ECM.
Refer to EC section ["Malfunction Indicator Lamp (MIL)", "ON BOARD DIAGNOSTIC SYSTEM DESCRIPTION"].

Improper Lock-up Operation (Cont'd)

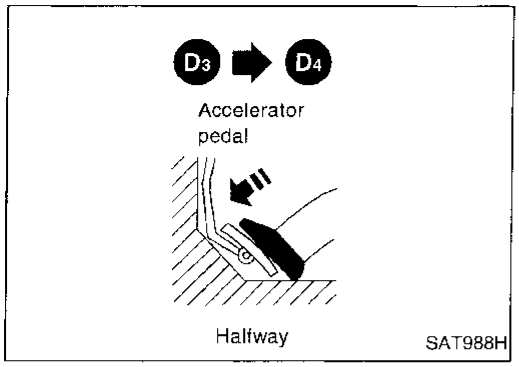

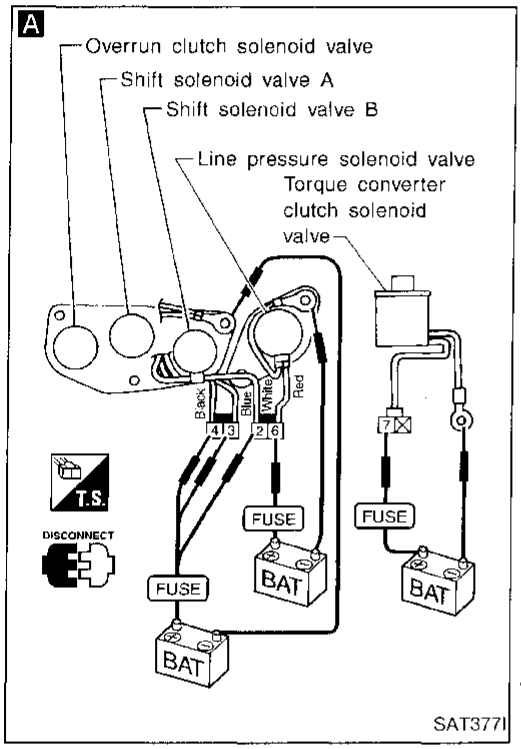

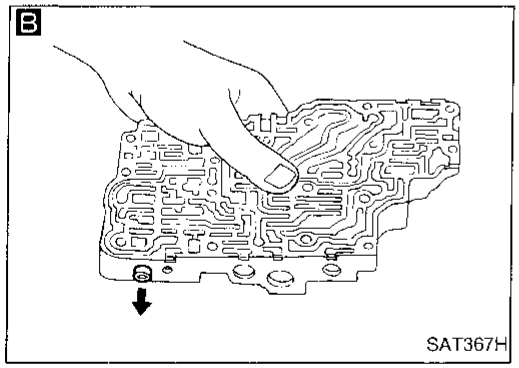

During "Cruise test – Part 1" (AT-41), does A/T shift from D_3 to D_4 at the specified speed?

- Yes → Go to Ⓑ and check for proper lock-up.
- No ↓

Perform pressure test. Refer to AT-123.

- NG → Go to Ⓐ.
- OK ↓

A

CHECK SOLENOID VALVES.

1. Remove control valve assembly. Refer to AT-132.
2. Check solenoid valve assembly operation. Refer to AT-87.

- NG → Replace solenoid valve assembly.
- OK ↓

B

CHECK CONTROL VALVE.

1. Disassemble control valve assembly. Refer to AT-157.
2. Check to ensure that:
   - Valve, sleeve and plug slide along valve bore under their own weight.
   - Valve, sleeve and plug are free from burrs, dents and scratches.
   - Control valve springs are free from damage, deformation and fatigue.
   - Hydraulic line is free from obstacles.

- NG → Repair control valve.
- OK ↓

Does A/T shift from D_3 to D_4 at the specified speed?

- NG → Check control valve again. Repair or replace control valve assembly.
- OK ↓

Perform Diagnostic Trouble Code (DTC) confirmation procedure, AT-83.

- NG → Go to Ⓑ and check for proper lock-up.
- OK ↓

INSPECTION END

Improper Lock-up Operation (Cont'd)

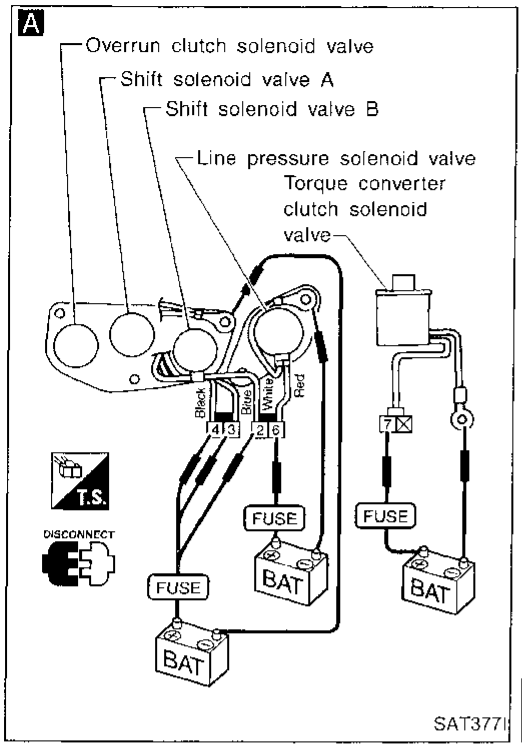

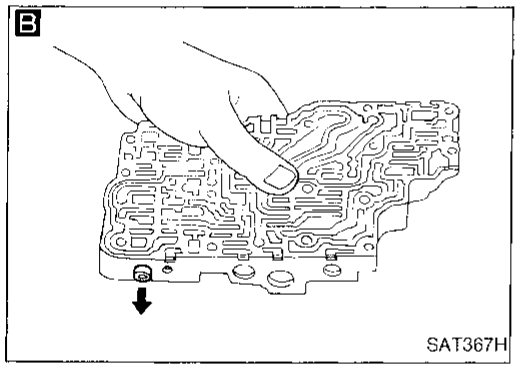

Ⓐ

A

CHECK LINE PRESSURE SOLENOID VALVE.
1. Remove control valve assembly. Refer to AT-132.
2. Check line pressure solenoid valve operation. Refer to AT-87.

NG → Replace solenoid valve assembly.

OK ↓

B

CHECK CONTROL VALVE.
1. Disassemble control valve assembly. Refer to AT-157.
2. Check line pressure circuit valves for sticking.
- Pressure regulator valve
- Pilot valve
- Pressure modifier valve

NG → Repair control valve.

OK ↓

Does A/T shift from D_3 to D_4 at the specified speed?

NG → Check control valve again. Repair or replace control valve assembly.

OK ↓

Perform Diagnostic Trouble Code (DTC) confirmation procedure, AT-83.

NG → Go to Ⓑ and check for proper lock-up.

OK ↓

INSPECTION END

Improper Lock-up Operation (Cont'd)

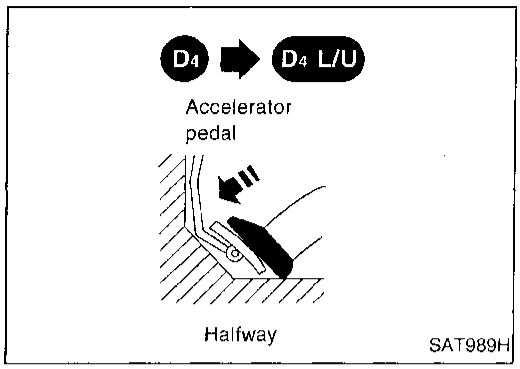

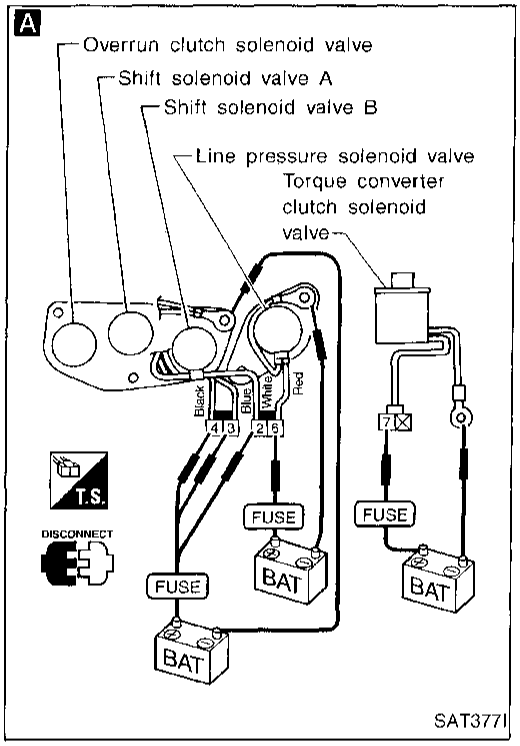

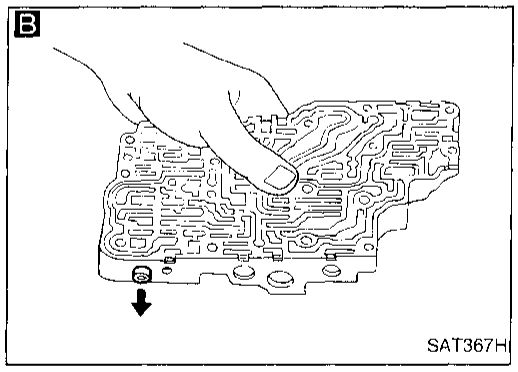

Ⓑ

During "Cruise test – Part 1" (AT-41), does A/T perform lock-up at the specified speed?
- Yes → Perform "Cruise test – Part 1" again and return to the start point of this flow chart.
- No ↓

A

CHECK TORQUE CONVERTER CLUTCH SOLENOID VALVE.
1. Remove control valve assembly. Refer to AT-132.
2. Check torque converter clutch solenoid valve operation. Refer to AT-87.

- NG → Replace solenoid valve assembly.
- OK ↓

B

CHECK CONTROL VALVE.
1. Disassemble control valve assembly. Refer to AT-157.
2. Check control valves for sticking.
   - Torque converter clutch control valve
   - Torque converter clutch relief valve

- NG → Repair control valve
- OK ↓

Does A/T perform lock-up at the specified speed?
- No → Check control valve again. Repair or replace control valve assembly.
- Yes ↓

Perform Diagnostic Trouble Code (DTC) confirmation procedure, AT-83.
- NG → Perform "Cruise test — Part 1" again and return to the start point of this flow chart.
- OK ↓

INSPECTION END

Improper Lock-up Operation (Cont'd)

COMPONENT INSPECTION

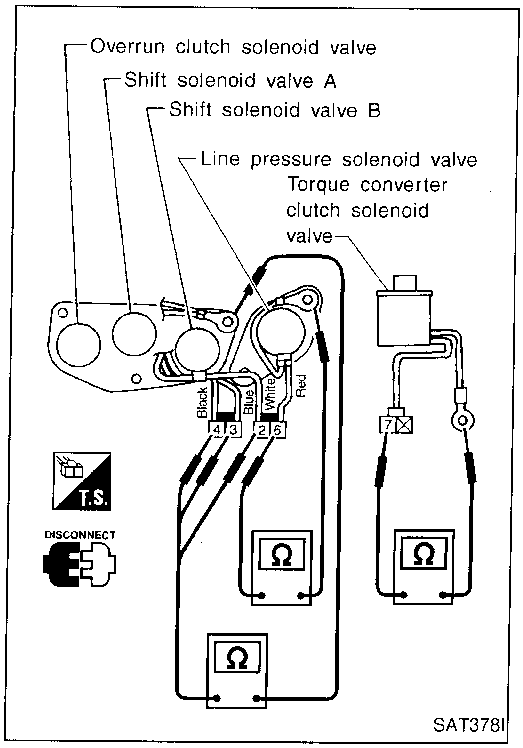

Solenoid valves

- For removal, refer to AT-132.

Resistance check

- Check resistance between two terminals.

Solenoid valve	Terminal No.		Resistance (Approx.)
Shift solenoid valve A	③	Ground	20 - 40Ω
Shift solenoid valve B	②		
Overrun clutch solenoid valve	④		
Line pressure solenoid valve	⑥		2.5 - 5Ω
Torque converter clutch solenoid valve	⑦		10 - 16Ω

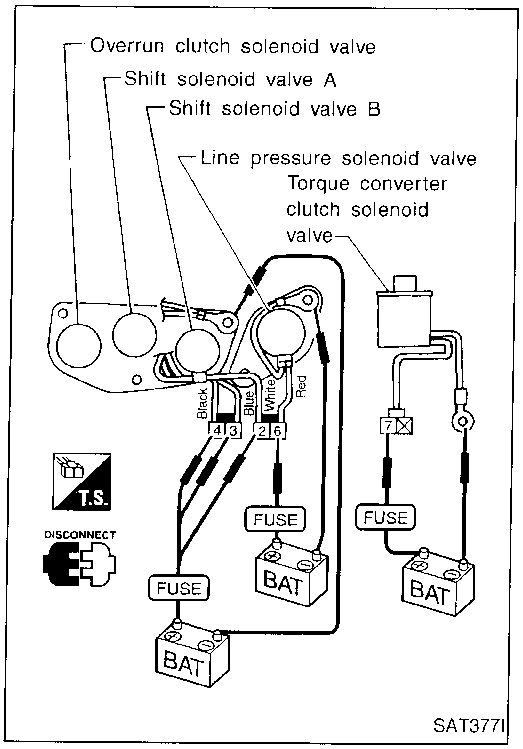

Operation check

- Check solenoid valve by listening for its operating sound while applying battery voltage to the terminal and ground.

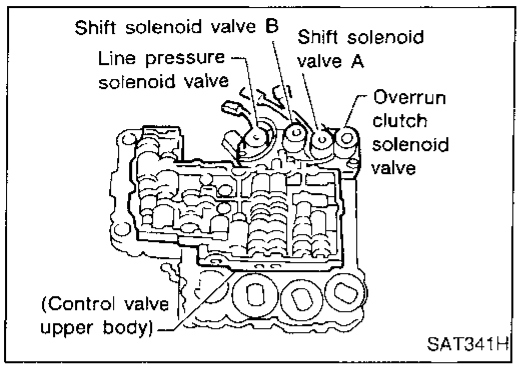

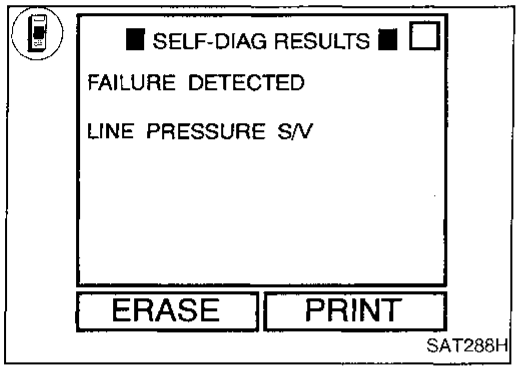

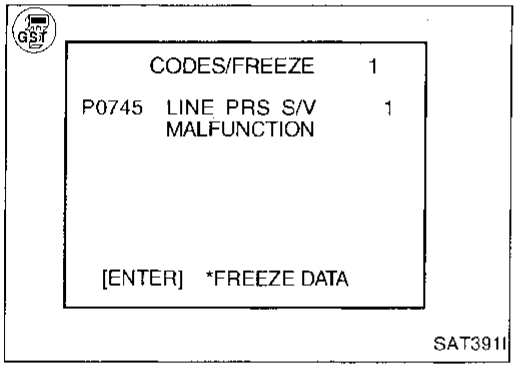

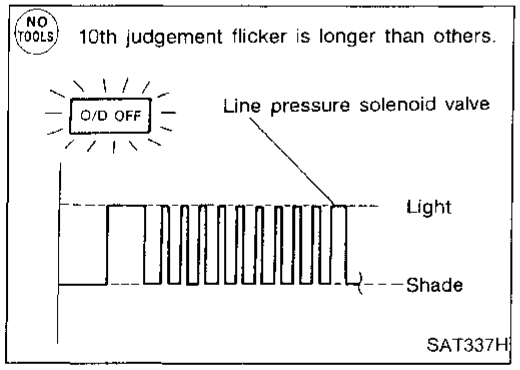

Line Pressure Solenoid Valve

DESCRIPTION

The line pressure solenoid valve regulates the oil pump discharge pressure to suit the driving condition in response to a signal sent from the A/T control unit.

Diagnostic trouble code	Malfunction is detected when ...	Check item (Possible cause)
: LINE PRESSURE S/V : P0745 : 10th judgement flicker	A/T control unit detects an improper voltage drop when it tries to operate the solenoid valve.	• Harness or connectors (The solenoid circuit is open or shorted.) • Line pressure solenoid valve

Diagnostic Trouble Code (DTC) confirmation procedure

After the repair, perform the following procedure to confirm the malfunction is eliminated.

1) Start engine.
2) Select "SELF-DIAG RESULTS" mode with CONSULT.
3) With brake pedal depressed, shift the lever from "P" → "N" → "D" → "N" → "P".

OR

1) Start engine.
2) With brake pedal depressed, shift the lever from "P" → "N" → "D" → "N" → "P".
3) Select "MODE 7" with GST.

OR

1) Start engine.
2) With brake pedal depressed, shift the lever from "P" → "N" → "D" → "N" → "P".
3) Perform self-diagnosis.
Refer to SELF-DIAGNOSTIC PROCEDURE (No Tools), AT-23.

Line Pressure Solenoid Valve (Cont'd)

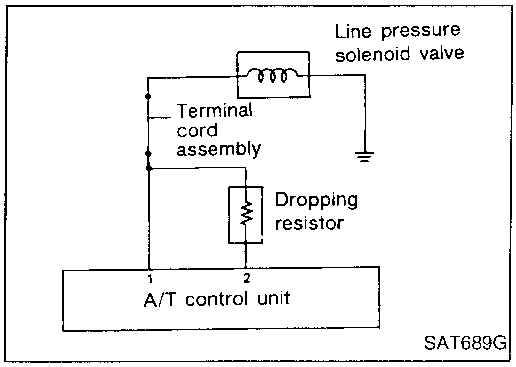

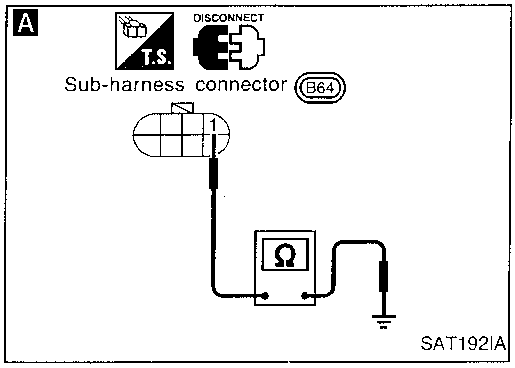

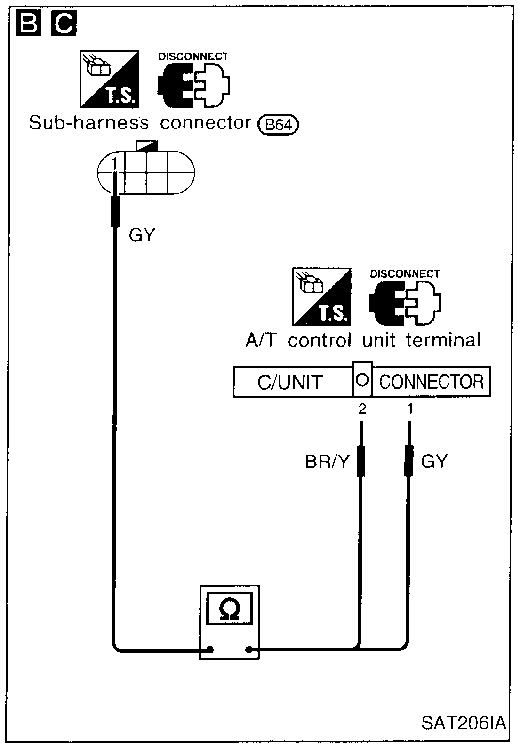

A

CHECK GROUND CIRCUIT.
1. Turn ignition switch to "OFF" position.
2. Disconnect terminal cord assembly connector in engine compartment.
3. Check resistance between terminal ① and ground.
   Resistance: 2.5 - 5Ω

NG → 1. Remove control valve assembly. Refer to AT-132.
2. Check the following items:
   - Line pressure solenoid valve
     Refer to "Component Inspection" on next page.
   - Harness of terminal cord assembly for short or open

OK ↓

B

CHECK POWER SOURCE CIRCUIT.
1. Turn ignition switch to "OFF" position.
2. Disconnect A/T control unit harness connector.
3. Check resistance between terminal ① and A/T control unit harness connector terminal ②.
   Resistance: 11.2 - 12.8Ω

NG → Check the following items:
- Dropping resistor
  Refer to "Component Inspection" on next page.
- Harness for short or open between A/T control unit terminal ② and terminal cord assembly (Main harness)

OK ↓

C

CHECK POWER SOURCE CIRCUIT.
1. Turn ignition switch to "OFF" position.
2. Check resistance between terminal ① and A/T control unit harness connector terminal ①.
   Resistance:
   Approximately 0Ω
3. Reinstall any part removed.

NG → Repair or replace harness between A/T control unit terminal ① and terminal cord assembly.

OK ↓

Perform Diagnostic Trouble Code (DTC) confirmation procedure, AT-88.

NG → 1. Perform A/T control unit input/output signal inspection.
2. If NG, recheck A/T control unit pin terminals for damage or loose connection with harness connector.

OK ↓

INSPECTION END

Line Pressure Solenoid Valve (Cont'd)

COMPONENT INSPECTION

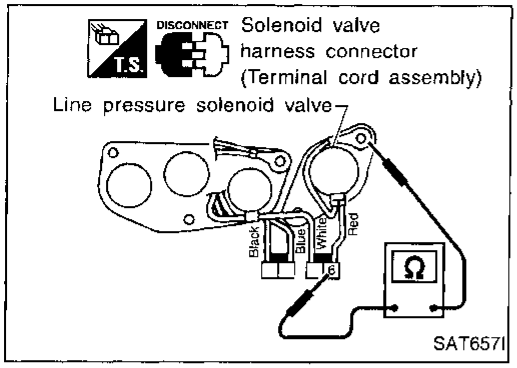

Line pressure solenoid valve

- For removal, refer to AT-132.

Resistance check

- Check resistance between two terminals.

Solenoid valve	Terminal No.		Resistance (Approx.)
Line pressure solenoid valve	⑥	Ground	2.5 - 5Ω

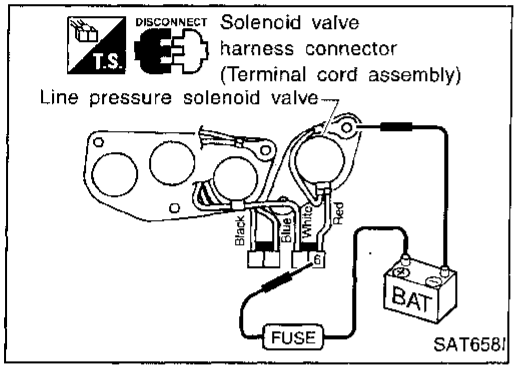

Operation check

- Check solenoid valve by listening for its operating sound while applying battery voltage to the terminal and ground.

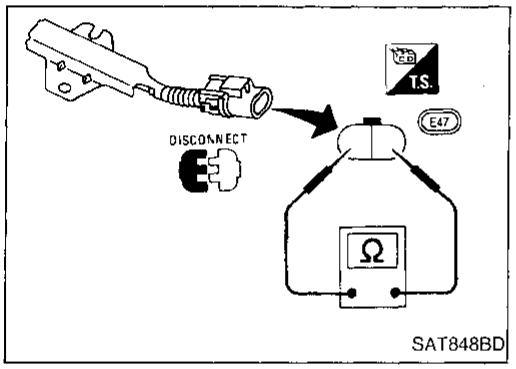

Dropping resistor

- Check resistance between two terminals.
  Resistance: 11.2 - 12.8Ω

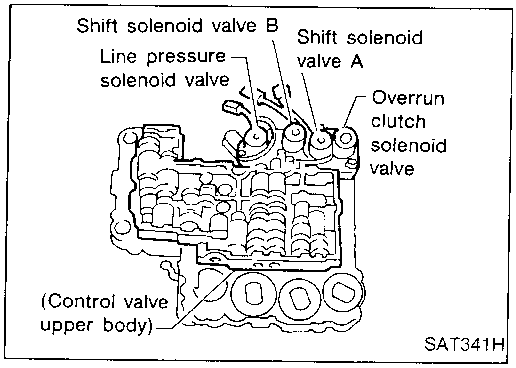

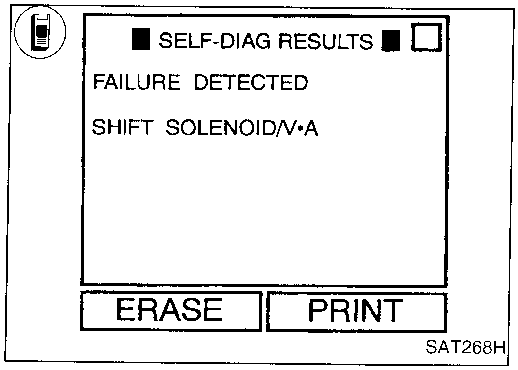

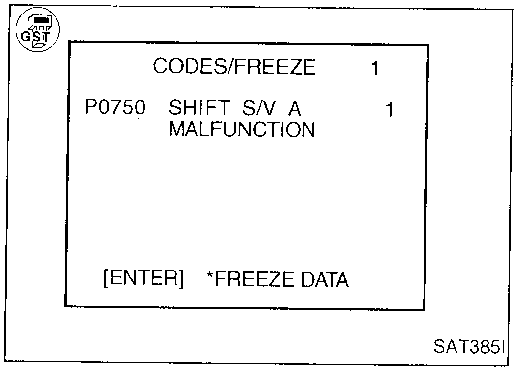

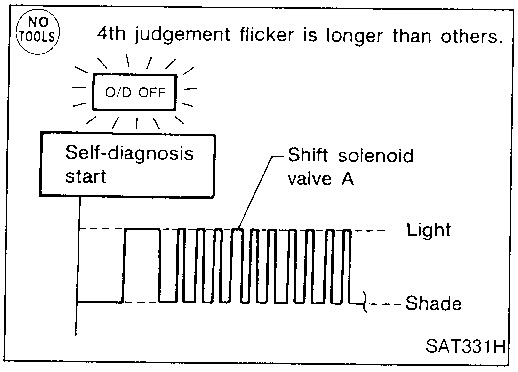

Shift Solenoid Valve A

DESCRIPTION

Shift solenoid valves A and B are turned "ON" or "OFF" by the A/T control unit in response to signals sent from the inhibitor switch, vehicle speed and throttle position sensors. Gears will then be shifted to the optimum position.

Gear position	1	2	3	4
Shift solenoid valve A	ON	OFF	OFF	ON
Shift solenoid valve B	ON	ON	OFF	OFF

Diagnostic trouble code	Malfunction is detected when ...	Check item (Possible cause)
: SHIFT SOLENOID/V·A : P0750 : 4th judgement flicker	A/T control unit detects an improper voltage drop when it tires to operate the solenoid valve.	• Harness or connectors (The solenoid circuit is open or shorted.) • Shift solenoid valve A

Diagnostic Trouble Code (DTC) confirmation procedure

After the repair, perform the following procedure to confirm the malfunction is eliminated.

1) Start engine.
2) Select "SELF-DIAG RESULTS" mode with CONSULT.
3) Drive vehicle in $D_1 \rightarrow D_2$ position.

OR

1) Start engine.
2) Drive vehicle in $D_1 \rightarrow D_2$ position.
3) Select "MODE 7" with GST.

OR

1) Start engine.
2) Drive vehicle in $D_1 \rightarrow D_2$ position.
3) Perform self-diagnosis.
Refer to SELF-DIAGNOSTIC PROCEDURE (No Tools), AT-23.

Shift Solenoid Valve A (Cont'd)

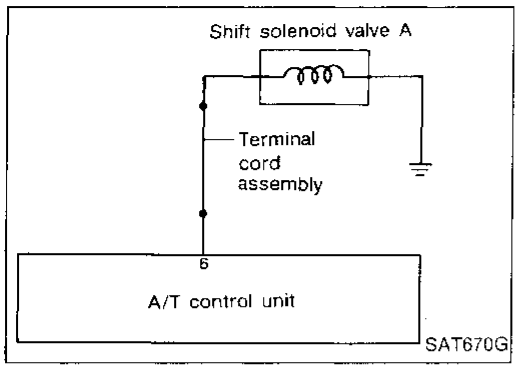

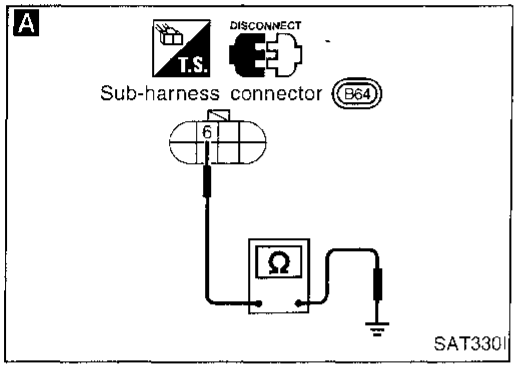

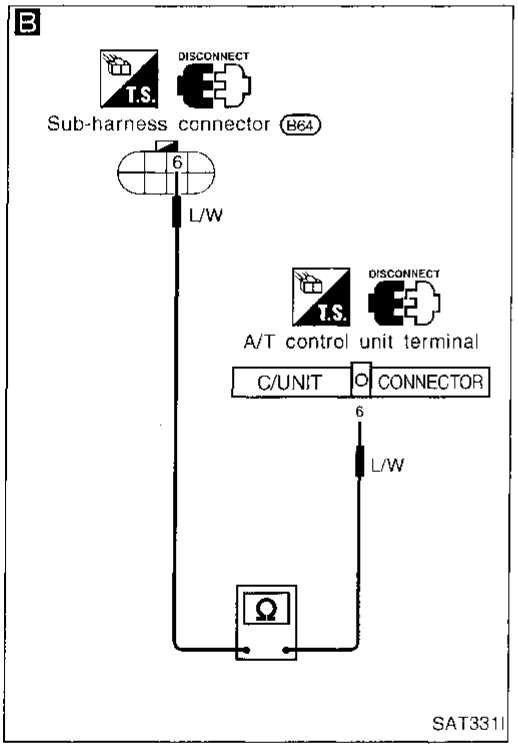

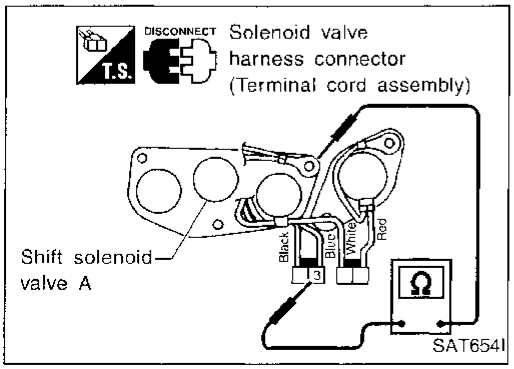

A

CHECK GROUND CIRCUIT.
1. Turn ignition switch to "OFF" position.
2. Disconnect terminal cord assembly connector in engine compartment.
3. Check resistance between terminal ⑥ and ground.
   Resistance: 20 - 40Ω

NG →
1. Remove control valve assembly. Refer to AT-132.
2. Check the following items:
   - Shift solenoid valve A Refer to "Component Inspection" below.
   - Harness of terminal cord assembly for short or open

OK ↓

B

CHECK POWER SOURCE CIRCUIT.
1. Turn ignition switch to "OFF" position.
2. Disconnect A/T control unit harness connector.
3. Check resistance between terminal ⑥ and A/T control unit harness connector terminal ⑥ .
   Resistance:
   Approximately 0Ω
4. Reinstall any part removed.

NG → Repair or replace harness between A/T control unit and terminal cord assembly. (Main harness)

OK ↓

Perform Diagnostic Trouble Code (DTC) confirmation procedure, AT-91.

NG →
1. Perform A/T control unit input/output signal inspection.
2. If NG, recheck A/T control unit pin terminals for damage or loose connection with harness connector.

OK ↓

INSPECTION END

COMPONENT INSPECTION

Shift solenoid valve A

- For removal, refer to AT-132.

Resistance check

- Check resistance between two terminals.

Solenoid valve	Terminal No.		Resistance (Approx.)
Shift solenoid valve A	③	Ground	20 - 40Ω

Shift Solenoid Valve A (Cont'd)

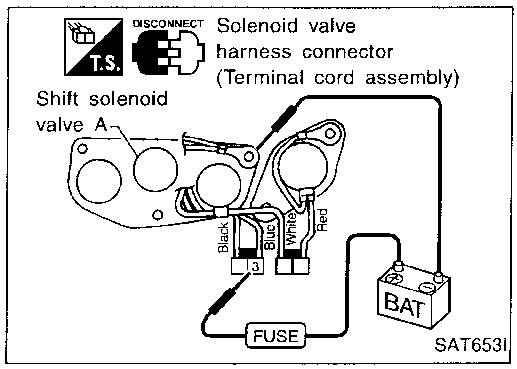

Operation check

- Check solenoid valve by listening for its operating sound while applying battery voltage to the terminal and ground.

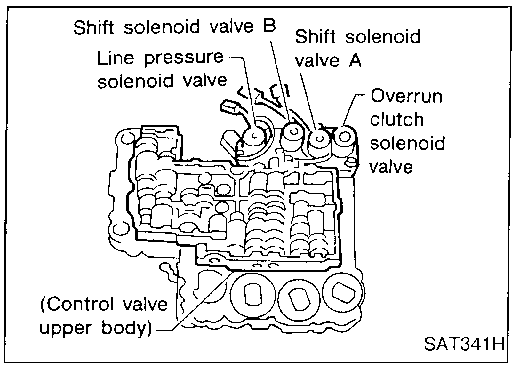

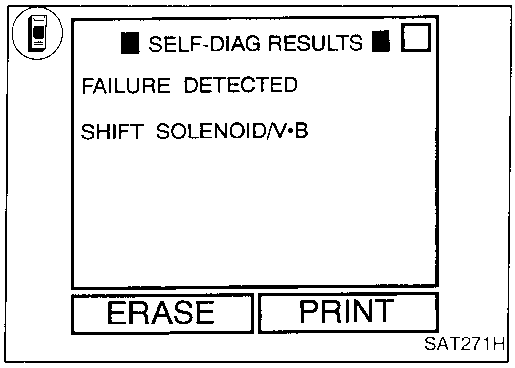

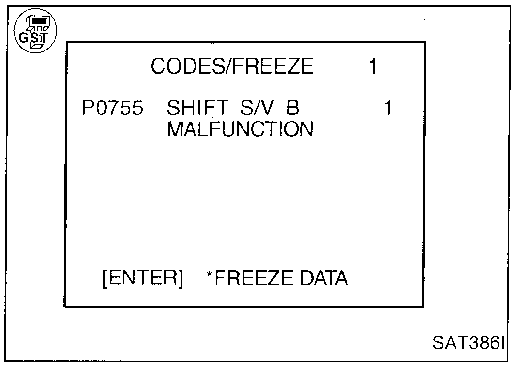

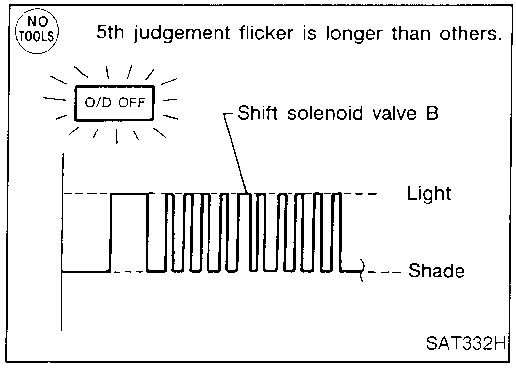

Shift Solenoid Valve B

DESCRIPTION

Shift solenoid valves A and B are turned "ON" or "OFF" by the A/T control unit in response to signals sent from the inhibitor switch, vehicle speed and throttle position sensors. Gears will then be shifted to the optimum position.

Gear position	1	2	3	4
Shift solenoid valve A	ON	OFF	OFF	ON
Shift solenoid valve B	ON	ON	OFF	OFF

Diagnostic trouble code	Malfunction is detected when ...	Check item (Possible cause)
: SHIFT SOLENOID/V·B : P0755 : 5th judgement flicker	A/T control unit detects an improper voltage drop when it tires to operate the solenoid valve.	• Harness or connectors (The solenoid circuit is open or shorted.) • Shift solenoid valve B

Diagnostic Trouble Code (DTC) confirmation procedure

After the repair, perform the following procedure to confirm the malfunction is eliminated.

1) Start engine.
2) Select "SELF-DIAG RESULTS" mode with CONSULT.
3) Drive vehicle in $D_1 \rightarrow D_2 \rightarrow D_3$ position.

OR

1) Start engine.
2) Drive vehicle in $D_1 \rightarrow D_2 \rightarrow D_3$ position.
3) Select "MODE 7" with GST.

OR

1) Start engine.
2) Drive vehicle in $D_1 \rightarrow D_2 \rightarrow D_3$ position.
3) Perform self-diagnosis.
   Refer to SELF-DIAGNOSTIC PROCEDURE (No Tools), AT-23.

Shift Solenoid Valve B (Cont'd)

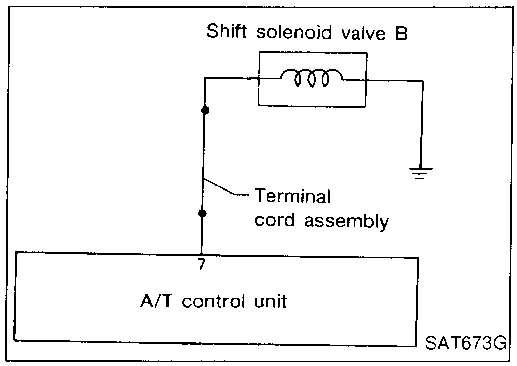

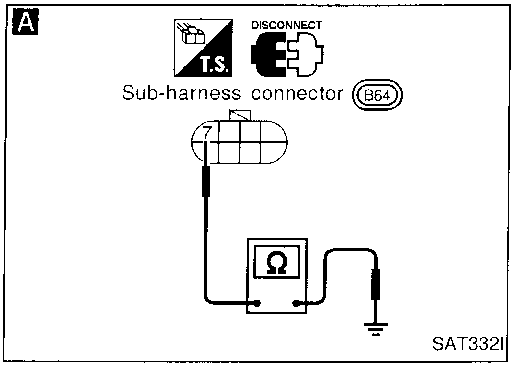

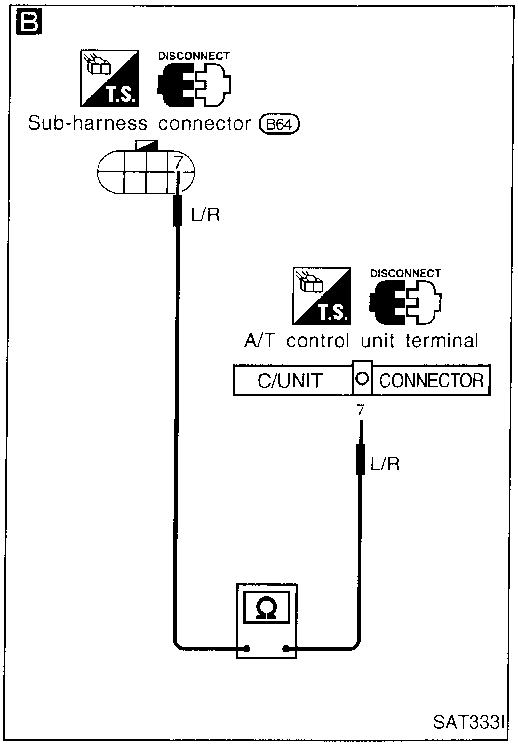

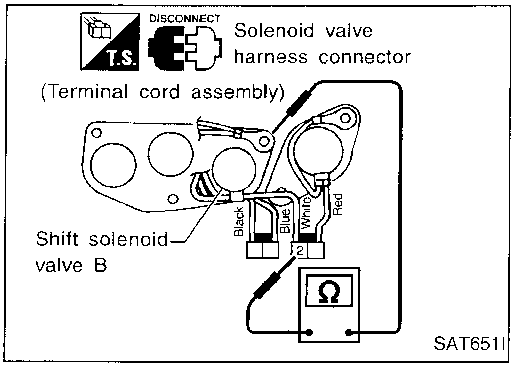

A

CHECK GROUND CIRCUIT.
1. Turn ignition switch to "OFF" position.
2. Disconnect terminal cord assembly connector in engine compartment.
3. Check resistance between terminal ⑦ and ground.
   Resistance: 20 - 40Ω

NG → 1. Remove control valve assembly. Refer to AT-132.
2. Check the following items:
- Shift solenoid valve B Refer to "Component Inspection" below.
- Harness of terminal cord assembly for short or open

OK ↓

B

CHECK POWER SOURCE CIRCUIT.
1. Turn ignition switch to "OFF" position.
2. Disconnect A/T control unit harness connector.
3. Check resistance between terminal ⑦ and A/T control unit harness connector terminal ⑦ .
   Resistance:
   Approximately 0Ω
4. Reinstall any part removed.

NG → Repair or replace harness between A/T control unit and terminal cord assembly. (Main harness)

OK ↓

Perform Diagnostic Trouble Code (DTC) confirmation procedure, AT-94.

NG → 1. Perform A/T control unit input/output signal inspection.
2. If NG, recheck A/T control unit pin terminals for damage or loose connection with harness connector.

OK ↓

INSPECTION END

COMPONENT INSPECTION

Shift solenoid valve B

- For removal, refer to AT-132.

Resistance check

- Check resistance between two terminals.

Solenoid valve	Terminal No.		Resistance (Approx.)
Shift solenoid valve B	②	Ground	20 - 40Ω

Shift Solenoid Valve B (Cont'd)

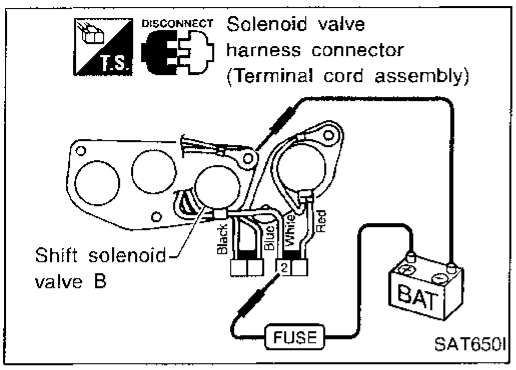

Operation check

- Check solenoid valve by listening for its operating sound while applying battery voltage to the terminal and ground.

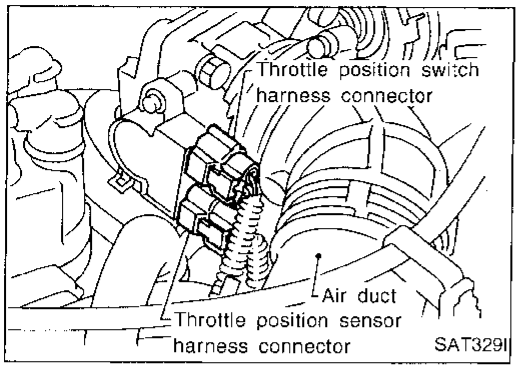

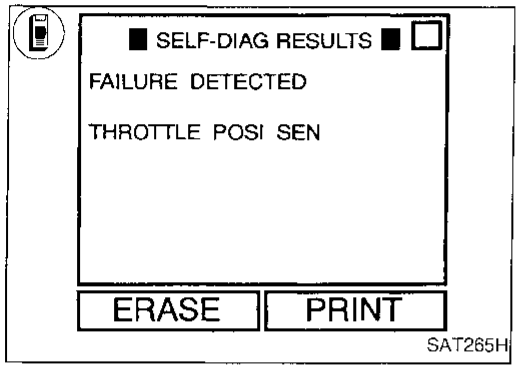

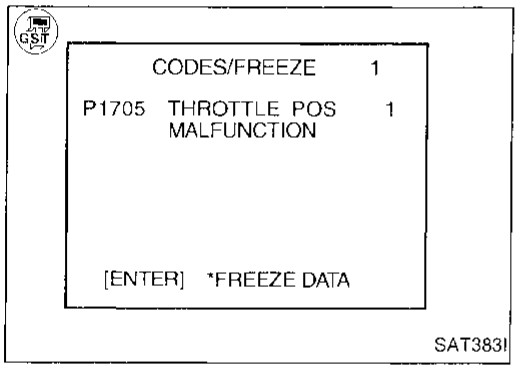

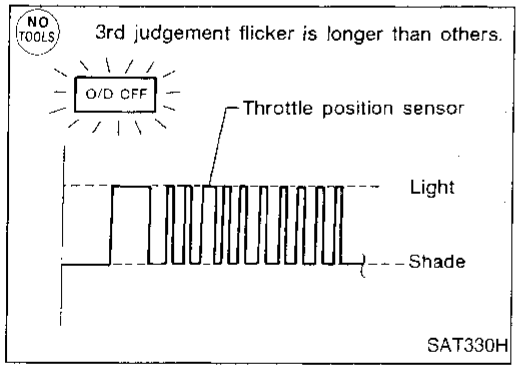

Throttle Position Sensor

DESCRIPTION

The throttle position sensor detects the throttle valve position and sends a signal to the A/T control unit.

Diagnostic trouble code	Malfunction is detected when ...	Check item (Possible cause)
: THROTTLE POSITION : P1705 : 3rd judgement flicker	A/T control unit receives an excessively low or high voltage from the sensor.	• Harness or connectors (The sensor circuit is open or shorted.) • Throttle position sensor

Diagnostic Trouble Code (DTC) confirmation procedure

After the repair, perform the following procedure to confirm the malfunction is eliminated.

1) Start engine.
2) Select "SELF-DIAG RESULTS" mode with CONSULT.
3) Drive vehicle under the following conditions:
   Selector lever in "D", vehicle speed higher than 10 km/h (6 MPH), throttle opening greater than 1/2 of the full throttle position and driving for more than 3 seconds.

OR

1) Start engine.
2) Drive vehicle under the following conditions:
   Selector lever in "D", vehicle speed higher than 10 km/h (6 MPH), throttle opening greater than 1/2 of the full throttle position and driving for more than 3 seconds.
3) Select "MODE 7" with GST.

OR

1) Start engine.
2) Drive vehicle under the following conditions:
   Selector lever in "D", vehicle speed higher than 10 km/h (6 MPH), throttle opening greater than 1/2 of the full throttle position and driving for more than 3 seconds.
3) Perform self-diagnosis.
   Refer to SELF-DIAGNOSTIC PROCEDURE (No Tools), AT-23.

Throttle Position Sensor (Cont'd)

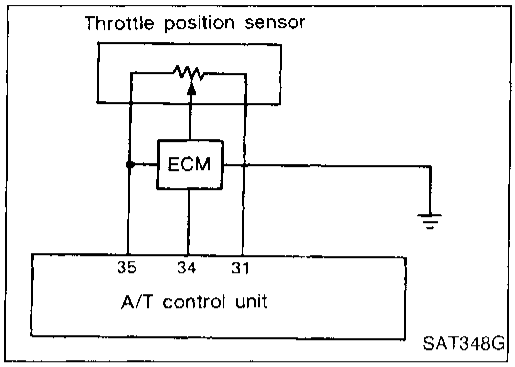

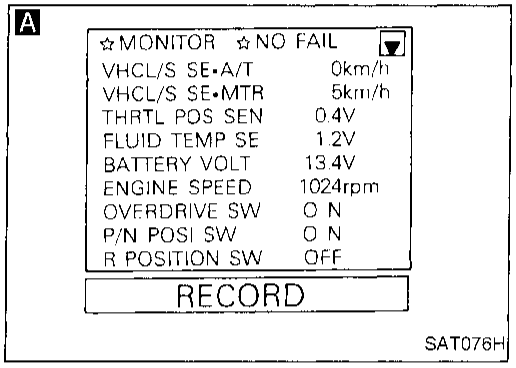

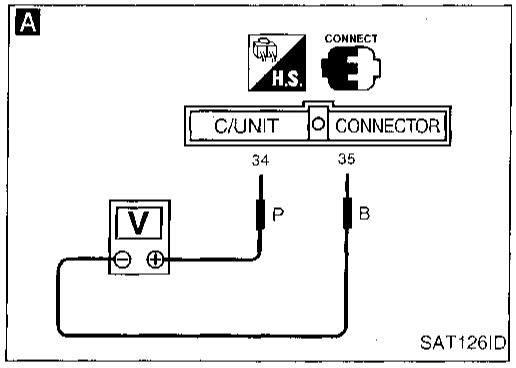

Perform diagnostic test mode II (self-diagnostic results) for engine control. Refer to EC section ["Malfunction Indicator Lamp (MIL)", "ON BOARD DIAGNOSTIC SYSTEM DESCRIPTION"].

NG → Check throttle position sensor circuit for engine control. Refer to EC section ["Throttle Position Sensor (DTC : 0403)", "TROUBLE DIAGNOSIS FOR DTC P0120"].

OK ↓

A

CHECK INPUT SIGNAL.

1. Turn ignition switch to "ON" position. (Do not start engine.)
2. Select "ECU INPUT SIGNALS" in Data Monitor.
3. Read out the value of "THRTL POS SEN".

Voltage:
Fully-closed throttle:
Approximately 0.5V
Fully-open throttle:
Approximately 4V

— OR —

1. Turn ignition switch to "ON" position. (Do not start engine.)
2. Check voltage between A/T control unit terminals ㉞ and ㉟ while accelerator pedal is depressed slowly.

Voltage:
Fully-closed throttle valve:
Approximately 0.5V
Fully-open throttle valve:
Approximately 4V
(Voltage rises gradually in response to throttle position)

NG → Check harness for short or open between ECM and A/T control unit regarding throttle position sensor circuit. (Main harness)

OK ↓

CHECK THROTTLE POSITION SWITCH. Refer to "TROUBLE DIAGNOSIS FOR DTC P0705", "CHECK THROTTLE POSITION SWITCH CIRCUIT", AT-58.

NG → Repair or replace damaged parts.

OK ↓

Perform Diagnostic Trouble Code (DTC) confirmation procedure, AT-97.

NG →
1. Perform A/T control unit input/output signal inspection.
2. If NG, recheck A/T control unit pin terminals for damage or loose connection with harness connector.

OK ↓

INSPECTION END

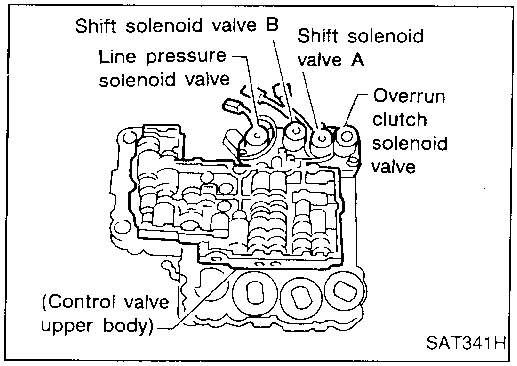

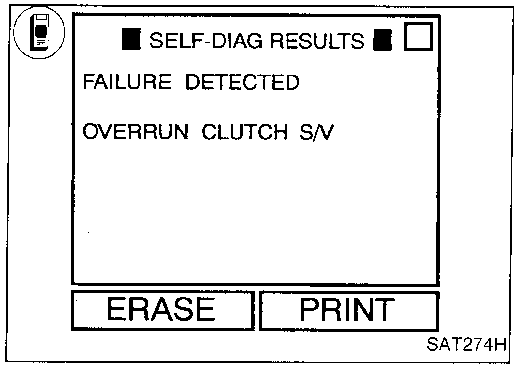

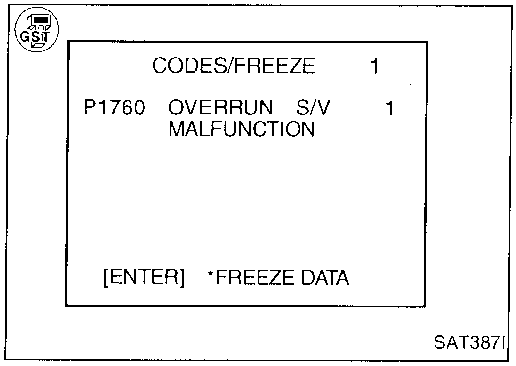

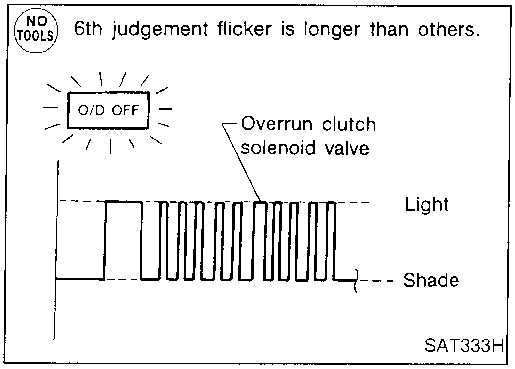

Overrun Clutch Solenoid Valve

DESCRIPTION

The overrun clutch solenoid valve is activated by the A/T control unit in response to signals sent from the inhibitor switch, overdrive control switch, vehicle speed and throttle position sensors. The overrun clutch operation will then be controlled.

Diagnostic trouble code	Malfunction is detected when ...	Check item (Possible cause)
: OVERRUN CLUTCH S/V : P1760 : 6th judgement flicker	A/T control unit detects an improper voltage drop when it tires to operate the solenoid valve.	• Harness or connectors (The solenoid circuit is open or shorted.) • Overrun clutch solenoid valve

Diagnostic Trouble Code (DTC) confirmation procedure

After the repair, perform the following procedure to confirm the malfunction is eliminated.

1) Start engine.
2) Select "SELF-DIAG RESULTS" mode with CONSULT.
3) Drive vehicle under the following conditions:
Selector lever in "D", overdrive control switch in "OFF" position and vehicle speed higher than 10 km/h (6 MPH).

OR

1) Start engine.
2) Drive vehicle under the following conditions:
Selector lever in "D", overdrive control switch in "OFF" position and vehicle speed higher than 10 km/h (6 MPH).
3) Select "MODE 7" with GST.

OR

1) Start engine.
2) Drive vehicle under the following conditions:
Selector lever in "D", overdrive control switch in "OFF" position and vehicle speed higher than 10 km/h (6 MPH).
3) Perform self-diagnosis.
Refer to SELF-DIAGNOSTIC PROCEDURE (No Tools), AT-23.

Overrun Clutch Solenoid Valve (Cont'd)

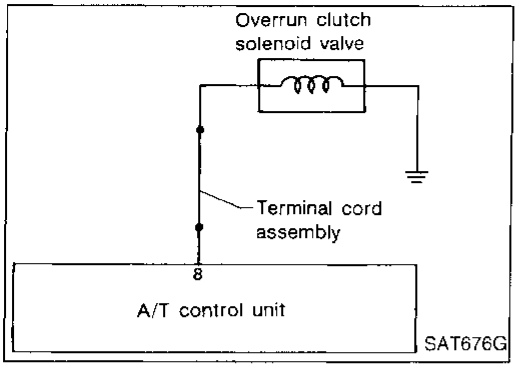

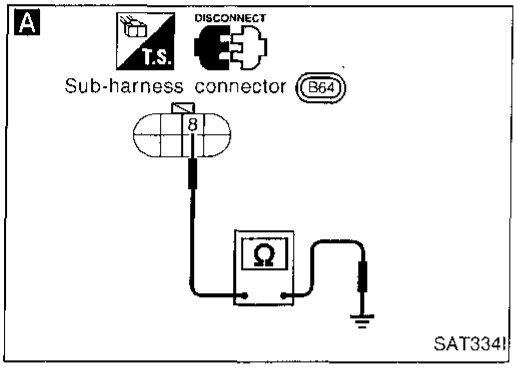

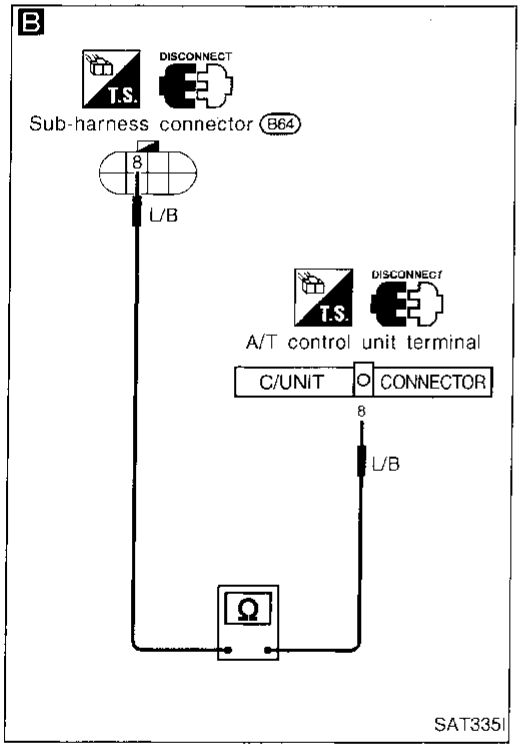

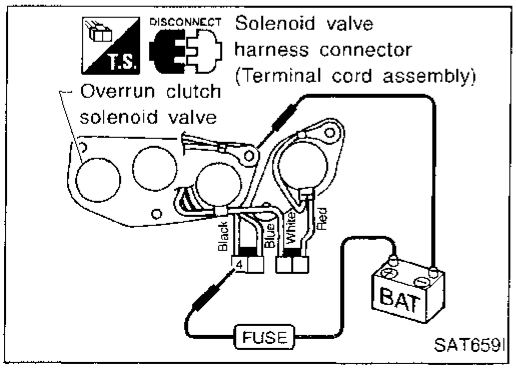

A

CHECK GROUND CIRCUIT.
1. Turn ignition switch to "OFF" position.
2. Disconnect terminal cord assembly connector in engine compartment.
3. Check resistance between terminal ⑧ and ground.
   Resistance: 20 - 40Ω

NG →
1. Remove control valve assembly. Refer to AT-132.
2. Check the following items:
   - Overrun clutch solenoid valve
     Refer to "Component Inspection" below.
   - Harness of terminal cord assembly for short or open

OK ↓

B

CHECK POWER SOURCE CIRCUIT.
1. Turn ignition switch to "OFF" position.
2. Disconnect A/T control unit harness connector.
3. Check resistance between terminal ⑧ and A/T control unit harness connector terminal ⑧ .
   Resistance:
   Approximately 0Ω
4. Reinstall any part removed.

NG → Repair or replace harness between A/T control unit and terminal cord assembly. (Main harness)

OK ↓

Perform Diagnostic Trouble Code (DTC) confirmation procedure, AT-99.

NG →
1. Perform A/T control unit input/output signal inspection.
2. If NG, recheck A/T control unit pin terminals for damage or loose connection with harness connector.

OK ↓

INSPECTION END

COMPONENT INSPECTION

Overrun clutch solenoid valve

- For removal, refer to AT-132.

Resistance check

- Check resistance between two terminals.

Solenoid valve	Terminal No.		Resistance (Approx.)
Overrun clutch solenoid valve	④	Ground	20 - 40Ω

Overrun Clutch Solenoid Valve (Cont'd)

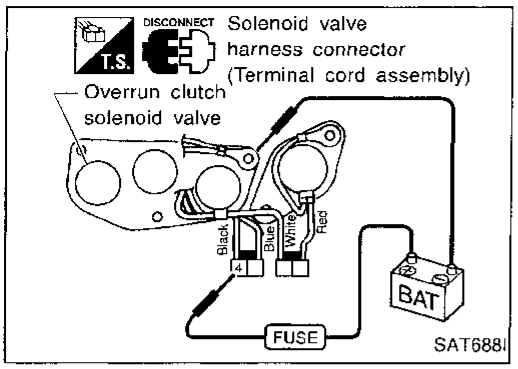

Operation check

- Check solenoid valve by listening for its operating sound while applying battery voltage to the terminal and ground.

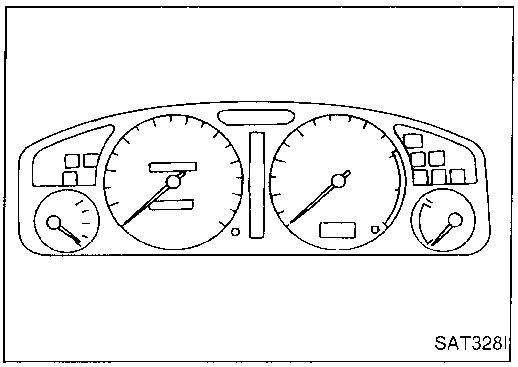

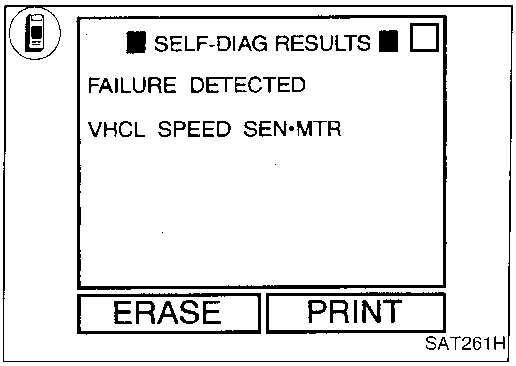

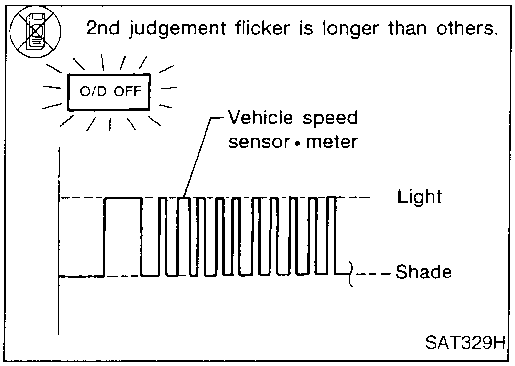

Vehicle Speed Sensor·MTR

DESCRIPTION

The vehicle speed sensor·MTR is built into the speedometer assembly. The sensor functions as an auxiliary device to the revolution sensor when it is malfunctioning. The A/T control unit will then use a signal sent from the vehicle speed sensor·MTR.

Diagnostic trouble code	Malfunction is detected when ...	Check item (Possible cause)
: VHCL SPEED SEN·MTR : 2nd judgement flicker	A/T control unit does not receive the proper voltage signal from the sensor.	• Harness or connectors (The sensor circuit is open or shorted.) • Vehicle speed sensor

Diagnostic Trouble Code (DTC) confirmation procedure

After the repair, perform the following procedure to confirm the malfunction is eliminated.

1) Start engine.
2) Select "SELF-DIAG RESULTS" mode with CONSULT.
3) Drive vehicle under the following conditions:
   Selector lever in "D" and vehicle speed higher than 20 km/h (12 MPH).

OR

1) Start engine.
2) Drive vehicle under the following conditions:
   Selector lever in "D" and vehicle speed higher than 20 km/h (12 MPH).
3) Perform self-diagnosis.
   Refer to SELF-DIAGNOSTIC PROCEDURE (No Tools), AT-23.

Vehicle Speed Sensor·MTR (Cont'd)

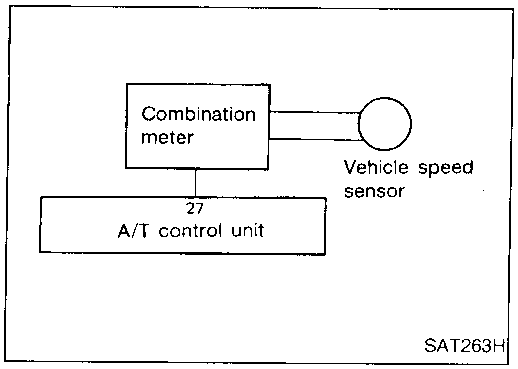

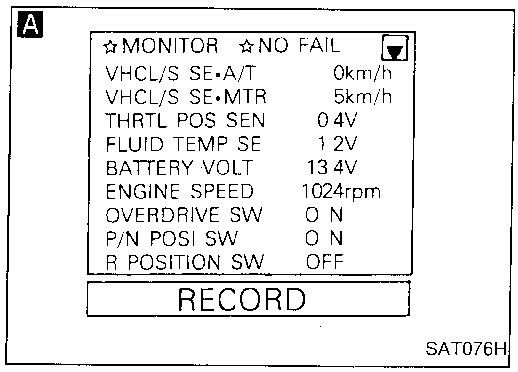

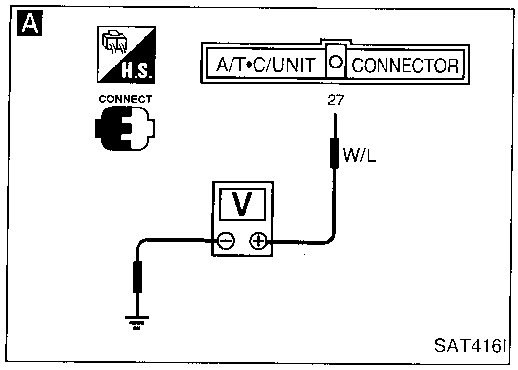

A

CHECK INPUT SIGNAL.

1. Start engine.
2. Select "ECU INPUT SIGNALS" in Data Monitor.
3. Read out the value of "VHCL/S SE·MTR" while driving. Check the value changes according to driving speed.

OR

1. Start engine.
2. Check voltage between A/T control unit terminal ㉗ and ground while driving at 2 to 3 km/h (1 to 2 MPH) for 1 m (3 ft) or more.

Voltage:
Voltage varies between less than 1V and more than 4.5V.

NG → Check the following items:
- Vehicle speed sensor and ground circuit for vehicle speed sensor Refer to EL section ("METERS AND GAUGES").
- Harness for short or open between A/T control unit and vehicle speed sensor (Main harness)

OK ↓

Perform Diagnostic Trouble Code (DTC) confirmation procedure, AT-102.

NG → 1. Perform A/T control unit input/output signal inspection.
2. If NG, recheck A/T control unit pin terminals for damage or loose connection with harness connector.

OK ↓

INSPECTION END

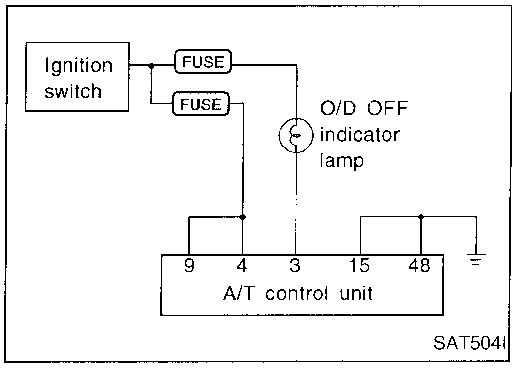

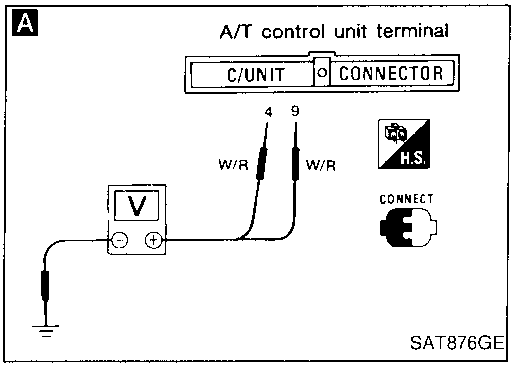

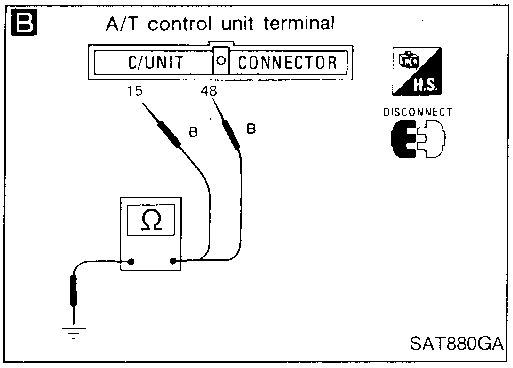

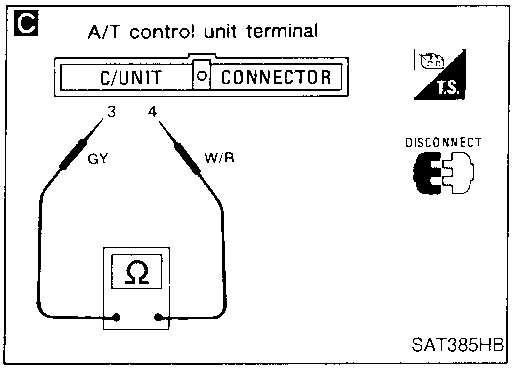

1. O/D OFF Indicator Lamp Does Not Come On

SYMPTOM:

O/D OFF indicator lamp does not come on for about 2 seconds when turning ignition switch to "ON".

A

CHECK A/T CONTROL UNIT POWER SOURCE.
1. Turn ignition switch to "ON" position. (Do not start engine.)
2. Check voltage between A/T control unit terminals ④, ⑨ and ground.
Battery voltage should exist.

NG → Check the following items:
- Harness for short or open between ignition switch and A/T control unit (Main harness)
- Ignition switch and fuse Refer to EL section ("POWER SUPPLY ROUTING").

OK ↓

B

CHECK A/T CONTROL UNIT GROUND CIRCUIT.
1. Turn ignition switch to "OFF" position.
2. Disconnect A/T control unit harness connector.
3. Check resistance between A/T control unit terminals ⑮, ㊽ and ground.
Resistance:
Approximately 0Ω

NG → Check harness for short or open between A/T control unit and ground.

OK ↓

C

CHECK LAMP CIRCUIT.
1. Turn ignition switch to "OFF" position.
2. Check resistance between A/T control unit terminals ③ and ④.
Resistance: 50 - 100Ω
3. Reinstall any part removed.

NG → Check the following items:
- O/D OFF indicator lamp Refer to EL section.
- Harness for short or open between ignition switch and O/D OFF indicator lamp (Main harness)
- Harness for short or open between O/D OFF indicator lamp and A/T control unit

OK ↓

Check again.

NG → 1. Perform A/T control unit input/output signal inspection.
2. If NG, recheck A/T control unit pin terminals for damage or loose connection with harness connector.

OK ↓

INSPECTION END

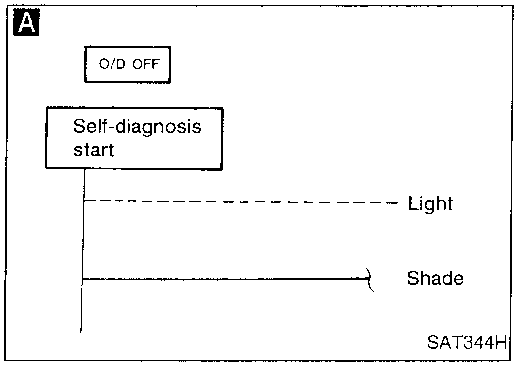

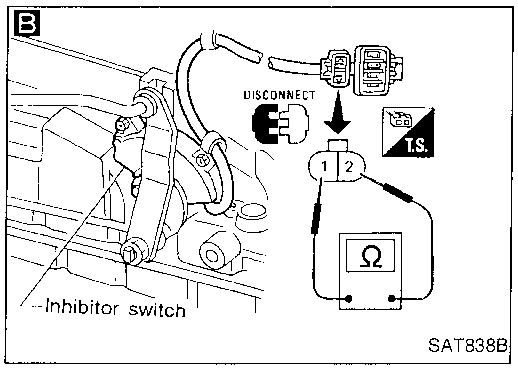

2. Engine Cannot Be Started In "P" and "N" Position

SYMPTOM:

- **Engine cannot be started with selector lever in "P" or "N" position.**
- **Engine can be started with selector lever in "D", "2", "1" or "R" position.**

Does "ECU INPUT SIGNALS" in Data Monitor show damage to inhibitor switch circuit? → Yes → Check inhibitor switch circuit. Refer to "TROUBLE DIAGNOSIS FOR DTC P0705", AT-55.

OR

A

Does self-diagnosis show damage to inhibitor switch circuit?

↓ No

B

Check for short or open of inhibitor switch 2-pin connector. Refer to "Component Inspection", AT-59. → NG → Repair or replace inhibitor switch.

↓ OK

Check starting system. Refer to EL section ("System Description", "STARTING SYSTEM"). → NG → Repair or replace damaged parts.

↓ OK

INSPECTION END

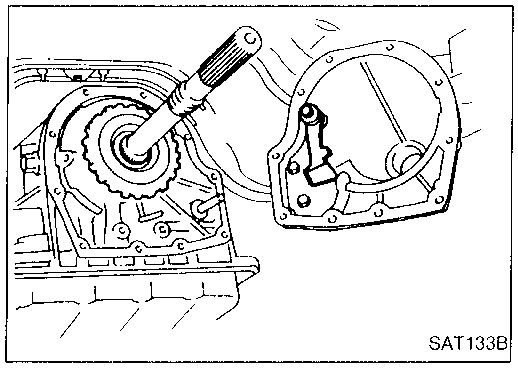

3. In "P" Position, Vehicle Moves Forward Or Backward When Pushed

SYMPTOM:

Vehicle moves when it is pushed forward or backward with selector lever in "P" position.

Check parking components. Refer to "Parking Pawl Components", AT-193. → NG → Repair or replace damaged parts.

↓ OK

INSPECTION END

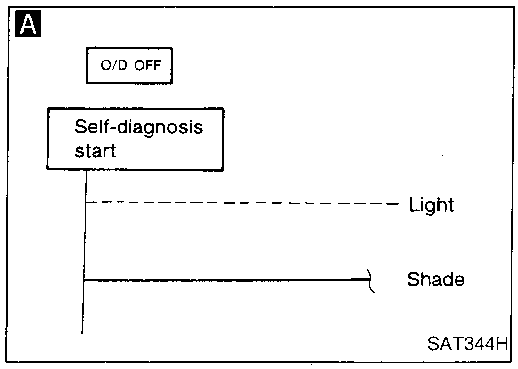

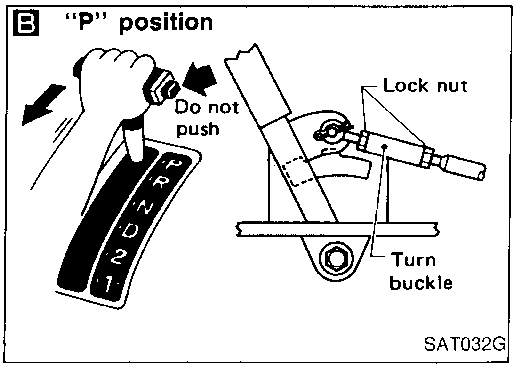

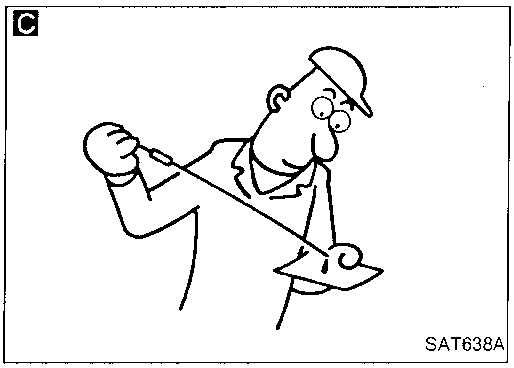

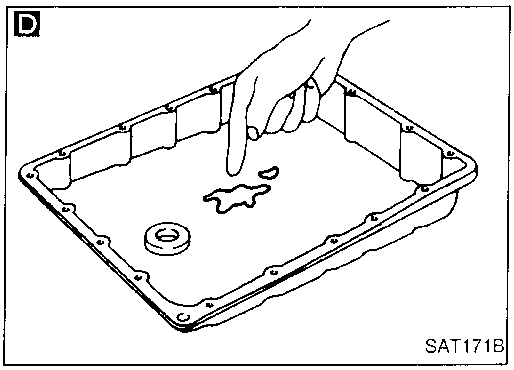

4. In "N" Position, Vehicle Moves

SYMPTOM:

Vehicle moves forward or backward when selecting "N" position.

Does "ECU INPUT SIGNALS" in Data Monitor show damage to inhibitor switch circuit? — Yes → Check inhibitor switch circuit. Refer to "TROUBLE DIAGNOSIS FOR DTC P0705", AT-55.

— OR —

A

Does self-diagnosis show damage to inhibitor switch circuit?

No ↓

Check control linkage. Refer to AT-134. — NG → B Adjust control linkage. Refer to AT-134.

OK ↓

C

Check A/T fluid level again. — NG → Refill ATF.

OK ↓

D

1. Remove oil pan.
2. Check A/T fluid condition.

— NG →
1. Disassemble A/T.
2. Check the following items:
   - Forward clutch assembly
   - Overrun clutch assembly
   - Reverse clutch assembly

OK ↓

Check again. — NG →
1. Perform A/T control unit input/output signal inspection.
2. If NG, recheck A/T control unit pin terminals for damage or loose connection with harness connector.

OK ↓

INSPECTION END

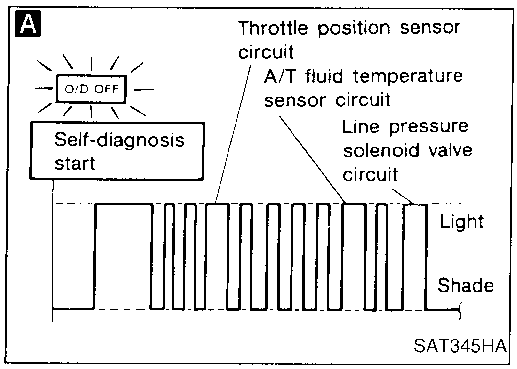

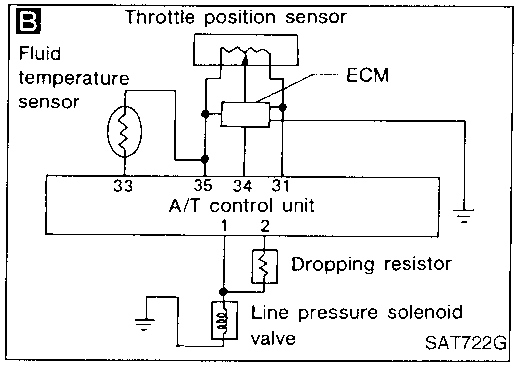

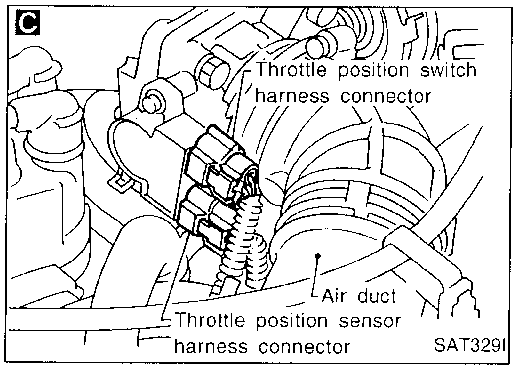

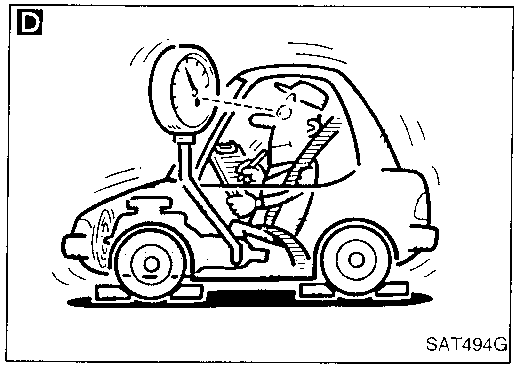

5. Large Shock. "N" → "R" Position

SYMPTOM:

There is large shock when changing from "N" to "R" position.

A

Does self-diagnosis show damage to A/T fluid temperature sensor, line pressure solenoid valve or throttle position sensor circuit?

Yes → **B** Check damaged circuit. Refer to "TROUBLE DIAGNOSIS FOR DTC P0710, P0745 or P1705", AT-61, 88 or 97.

No ↓

C

Check throttle position sensor. Refer to EC section ["Throttle Position Sensor (DTC: 0403)", "TROUBLE DIAGNOSIS FOR DTC P0120"].

NG → Repair or replace throttle position sensor.

OK ↓

D

Check line pressure at idle with selector lever in "D" position. Refer to "PRESSURE TESTING", AT-123.

NG →
1. Remove control valve assembly. Refer to AT-132.
2. Check the following items:
   - Valves to control line pressure (Pressure regulator valve, pressure modifier valve, pilot valve and pilot filter)
   - Line pressure solenoid valve

OK ↓

Check again.

NG →
1. Perform A/T control unit input/output signal inspection.
2. If NG, recheck A/T control unit pin terminals for damage or loose connection with harness connector.

OK ↓

INSPECTION END

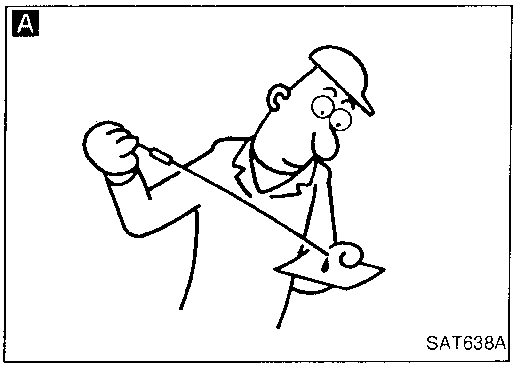

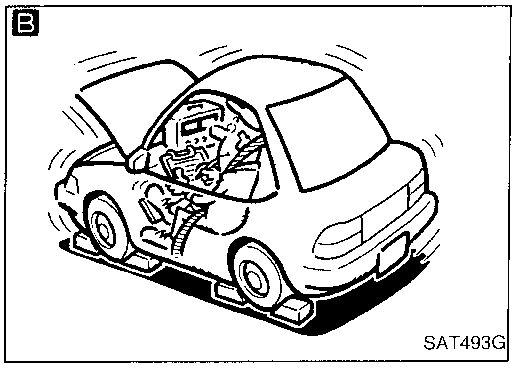

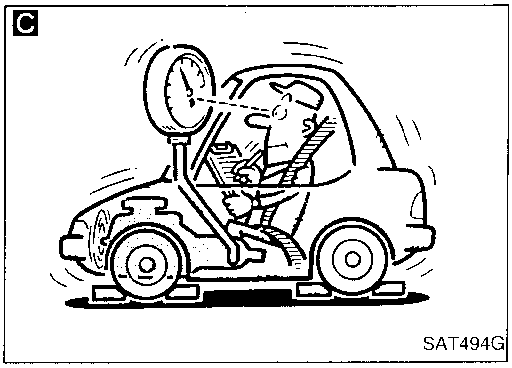

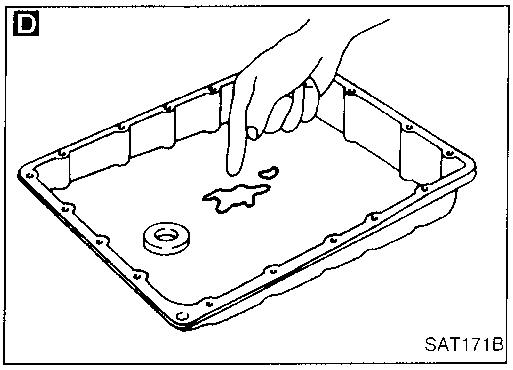

6. Vehicle Does Not Creep Backward In "R" Position

SYMPTOM:

Vehicle does not creep backward when selecting "R" position.

A

Check A/T fluid level again.

- NG → Refill ATF. → Ⓐ
- OK ↓

B

Check stall revolution with selector lever in "1" and "R" positions.

- NG in both "1" and "R" positions →
  1. Remove control valve assembly. Refer to "ON-VEHICLE SERVICE", AT-132.
  2. Check the following items:
     - Valves to control line pressure (Pressure regulator valve, pressure modifier valve, pilot valve and pilot filter)
     - Line pressure solenoid valve
  3. Disassemble A/T.
  4. Check the following items:
     - Oil pump assembly
     - Torque converter
     - Reverse clutch assembly
     - High clutch assembly
     - Low & reverse brake assembly
     - Low one-way clutch
- OK in "1" position, NG in "R" position ↓
  1. Remove control valve assembly. Refer to "ON-VEHICLE SERVICE", AT-132.
  2. Check the following items:
     - Valves to control line pressure (Pressure regulator valve, pressure modifier valve, pilot valve and pilot filter)
     - Line pressure solenoid valve
  3. Disassemble A/T.
  4. Check the following items:
     - Oil pump assembly
     - Torque converter
     - Reverse clutch assembly
     - High clutch assembly
- OK ↓

C

Check line pressure at idle with selector lever in "R" position. Refer to "PRESSURE TESTING", AT-123.

- NG →
  1. Remove control valve assembly. Refer to "ON-VEHICLE SERVICE", AT-132.
  2. Check the following items:
     - Valves to control line pressure (Pressure regulator valve, pressure modifier valve, pilot valve and pilot filter)
     - Line pressure solenoid valve
  3. Disassemble A/T.
  4. Check the following item:
     - Oil pump assembly
- OK ↓

D

1. Remove oil pan.
2. Check A/T fluid condition.

- NG → Ⓐ
- OK ↓

Check again.

- NG →
  1. Perform A/T control unit input/output signal inspection.
  2. If NG, recheck A/T control unit pin terminals for damage or loose connection with harness connector.
- OK ↓

INSPECTION END

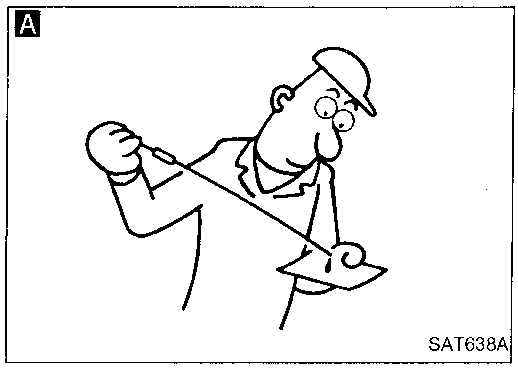

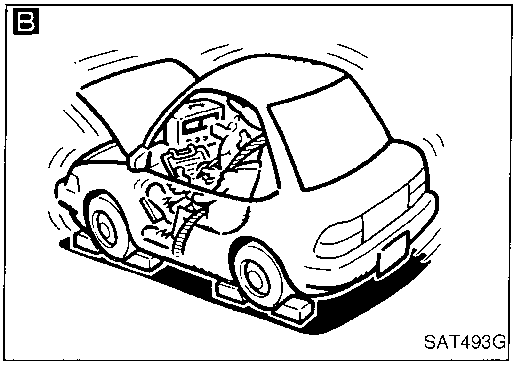

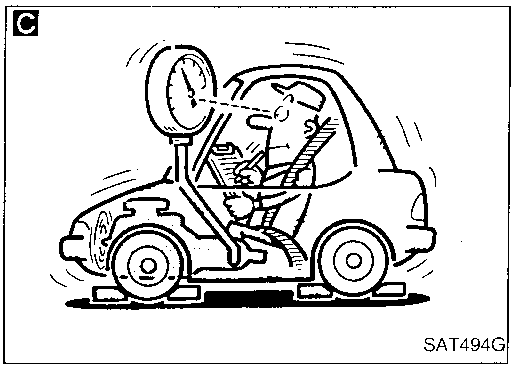

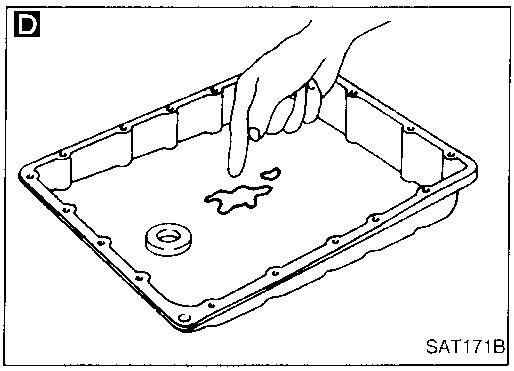

7. Vehicle Does Not Creep Forward In "D", "2" Or "1" Position

SYMPTOM:

Vehicle does not creep forward when selecting "D", "2" or "1" position.

A

Check A/T fluid level again.

NG → Refill ATF.

OK ↓

B

Check stall revolution with selector lever in "D" position. Refer to "STALL TESTING", AT-120.

NG →

1. Remove control valve assembly. Refer to AT-132.
2. Check the following items:
   - Valves to control line pressure (Pressure regulator valve, pressure modifier valve, pilot valve and pilot filter)
   - Line pressure solenoid valve
3. Disassemble A/T
4. Check the following items:
   - Oil pump assembly
   - Forward clutch assembly
   - Forward one-way clutch
   - Low one-way clutch
   - Low & reverse brake assembly
   - Torque converter

OK ↓

C

Check line pressure at idle with selector lever in "D" position. Refer to "PRESSURE TESTING", AT-123.

NG ↓

1. Remove control valve assembly. Refer to AT-132.
2. Check the following items:
   - Valves to control line pressure (Pressure regulator valve, pressure modifier valve, pilot valve and pilot filter)
   - Line pressure solenoid valve
3. Disassemble A/T
4. Check the following item:
   - Oil pump assembly

OK ↓

D

1. Remove oil pan.
2. Check A/T fluid condition.

NG → Ⓐ

OK ↓

Check again.

NG →

1. Perform A/T control unit input/output signal inspection.
2. If NG, recheck A/T control unit pin terminals for damage or loose connection with harness connector.

OK ↓

INSPECTION END

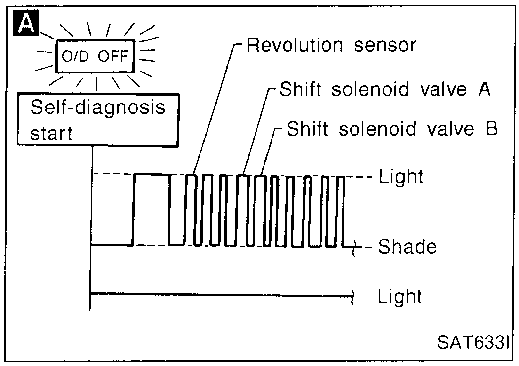

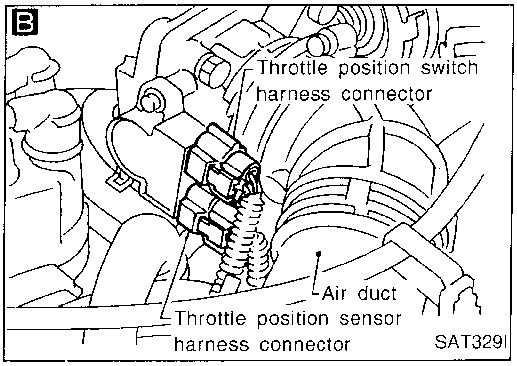

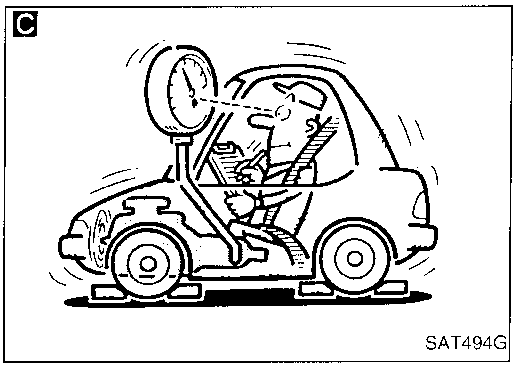

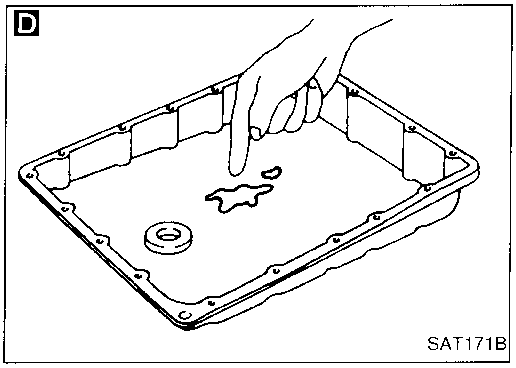

8. Vehicle Cannot Be Started From D_1

SYMPTOM:

Vehicle cannot be started from D_1 on Cruise test — Part 1.

Is 6. Vehicle Does Not Creep Backward In "R" Position OK?
- No → Go to 6. Vehicle Does Not Creep Backward In "R" Position, AT-108.
- Yes ↓

A

Does self-diagnosis show damage to vehicle speed sensor·A/T (revolution sensor), shift solenoid valve A, B or vehicle speed sensor·MTR after cruise test?
- Yes → Check damaged circuit. Refer to "TROUBLE DIAGNOSIS FOR DTC P0720, P0750, P0755 or VHCL SPEED SEN·MTR", AT-64, 91, 94 or 102.
- No ↓

B

Check throttle position sensor. Refer to EC section ["Throttle Position Sensor (DTC: 0403)", "TROUBLE DIAGNOSIS FOR DTC P0120"].
- NG → Repair or replace throttle position sensor.
- OK ↓

C

Check line pressure at stall point with selector lever in "D" position. Refer to "PRESSURE TESTING", AT-123.
- NG →
  1. Remove control valve assembly. Refer to AT-132.
  2. Check the following items:
     - Shift valve A
     - Shift valve B
     - Shift solenoid valve A
     - Shift solenoid valve B
     - Pilot valve
     - Pilot filter
  3. Disassemble A/T.
  4. Check the following items:
     - Forward clutch assembly
     - Forward one-way clutch
     - Low one-way clutch
     - High clutch assembly
     - Torque converter
     - Oil pump assembly
- OK ↓

D

1. Remove oil pan.
2. Check A/T fluid condition.
- NG → (as above)
- OK ↓

1. Remove control valve assembly. Refer to AT-132.
2. Check the following items:
   - Shift valve A
   - Shift valve B
   - Shift solenoid valve A
   - Shift solenoid valve B
   - Pilot valve
   - Pilot filter
- OK → (as above)

Check again.
- NG →
  1. Perform A/T control unit input/output signal inspection.
  2. If NG, recheck A/T control unit pin terminals for damage or loose connection with harness connector.
- OK ↓

INSPECTION END

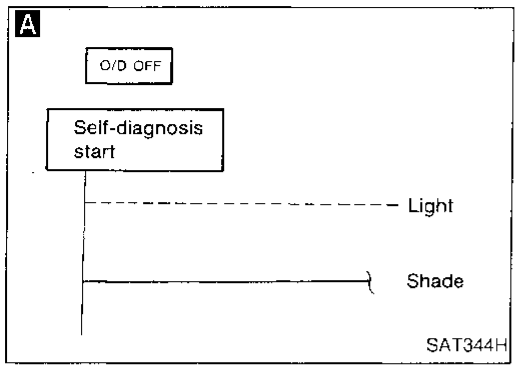

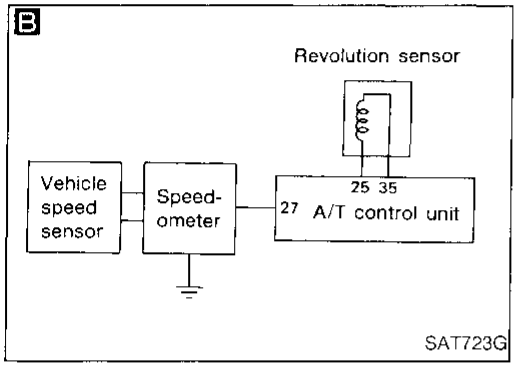

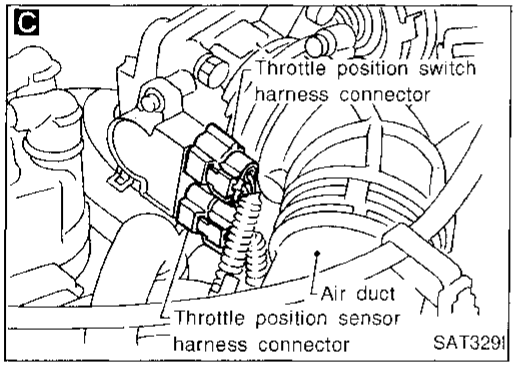

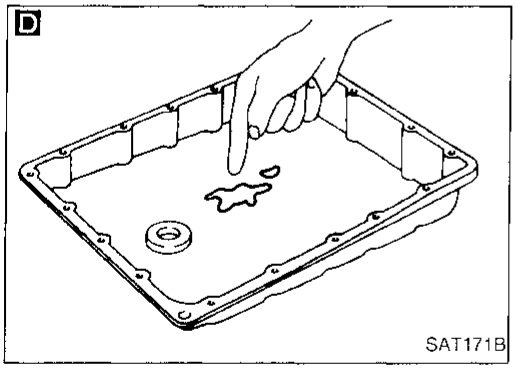

9. A/T Does Not Shift: $D_1 \rightarrow D_2$ Or Does Not Kickdown: $D_4 \rightarrow D_2$

SYMPTOM:

A/T does not shift from D_1 to D_2 at the specified speed.
A/T does not shift from D_4 to D_2 when depressing accelerator pedal fully at the specified speed.

Are 7. Vehicle Does Not Creep Forward In "D", "2" Or "1" Position and 8. Vehicle Cannot Be Started From D_1 OK?

- No → Go to 7. Vehicle Does Not Creep Forward In "D", "2" Or "1" Position and 8. Vehicle Cannot Be Started From D_1, AT-109, 110.
- Yes ↓

Does "ECU INPUT SIGNALS" in Data Monitor show damage to inhibitor switch circuit?

- Yes → Check inhibitor switch circuit. Refer to "TROUBLE DIAGNOSIS FOR DTC P0705", AT-55.

OR

A

Does self-diagnosis show damage to inhibitor switch circuit?

- No ↓

B

Check vehicle speed sensor·A/T (revolution sensor) and vehicle speed sensor·MTR circuit. Refer to "TROUBLE DIAGNOSIS FOR DTC P0720 and VHCL SPEED SEN·MTR", AT-64, 102.

- NG → Repair or replace vehicle speed sensor·A/T (revolution sensor) and vehicle speed sensor·MTR circuits.
- OK ↓

C

Check throttle position sensor. Refer to EC section ["Throttle Position Sensor (DTC: 0403)", "TROUBLE DIAGNOSIS FOR DTC P0120"].

- NG → Repair or replace throttle position sensor.
- OK ↓

D

1. Remove oil pan.
2. Check A/T fluid condition.

- NG →
  1. Remove control valve. Refer to AT-132.
  2. Check the following items:
     - Shift valve A
     - Shift solenoid valve A
     - Pilot valve
     - Pilot filter
  3. Disassemble A/T.
  4. Check the following items:
     - Servo piston assembly
     - Brake band
     - Oil pump assembly
  → OK ↓
- OK ↓

1. Remove control valve. Refer to AT-132.
2. Check the following items:
   - Shift valve A
   - Shift solenoid valve A
   - Pilot valve
   - Pilot filter

OK ↓

Check again.

- NG →
  1. Perform A/T control unit input/output signal inspection.
  2. If NG, recheck A/T control unit pin terminals for damage or loose connection with harness connector.
- OK ↓

INSPECTION END

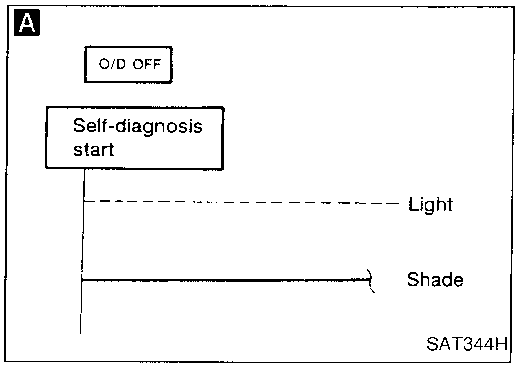

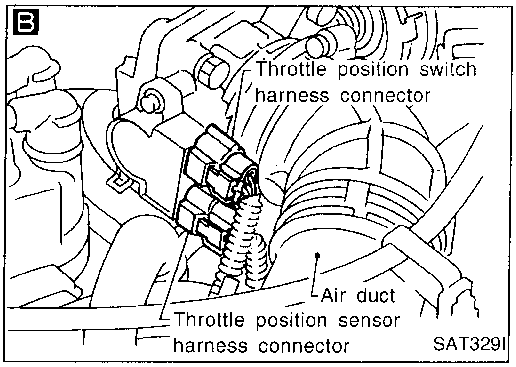

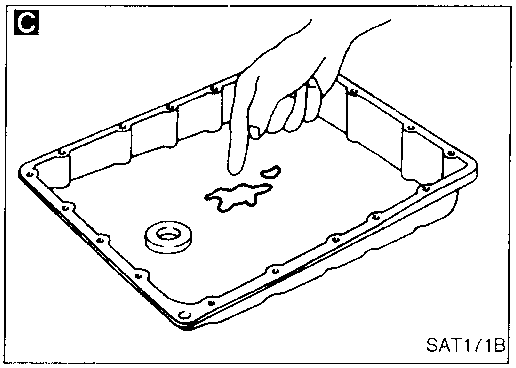

10. A/T Does Not Shift: $D_2 \rightarrow D_3$

SYMPTOM:

A/T does not shift from D_2 to D_3 at the specified speed.

Are 7. Vehicle Does Not Creep Forward In "D", "2" Or "1" Position and 8. Vehicle Cannot Be Started From D_1 OK?

- No → Go to 7. Vehicle Does Not Creep Forward In "D", "2" Or "1" Position and 8. Vehicle Cannot Be Started From D_1, AT-109, 110.
- Yes ↓

Does "ECU INPUT SIGNALS" in Data Monitor show damage to inhibitor switch circuit?

OR

A

Does self-diagnosis show damage to inhibitor switch circuit?

- Yes → Check inhibitor switch circuit. Refer to "TROUBLE DIAGNOSIS FOR DTC P0705", AT-55.
- No ↓

B

Check throttle position sensor. Refer to EC section ["Throttle Position Sensor (DTC: 0403)", "TROUBLE DIAGNOSIS FOR DTC P0120"].

- NG → Repair or replace throttle position sensor.
- OK ↓

C

1. Remove oil pan.
2. Check A/T fluid condition.

- NG →
  1. Remove control valve assembly. Refer to AT-132.
  2. Check the following items:
     - Shift valve B
     - Shift solenoid valve B
     - Pilot valve
     - Pilot filter
  3. Disassemble A/T.
  4. Check the following items:
     - Servo piston assembly
     - High clutch assembly
     - Oil pump assembly
  - OK ↓
- OK ↓

1. Remove control valve assembly. Refer to AT-132.
2. Check the following items:
   - Shift valve B
   - Shift solenoid valve B
   - Pilot valve
   - Pilot filter

OK ↓

Check again.

- NG →
  1. Perform A/T control unit input/output signal inspection.
  2. If NG, recheck A/T control unit pin terminals for damage or loose connection with harness connector.
- OK ↓

INSPECTION END

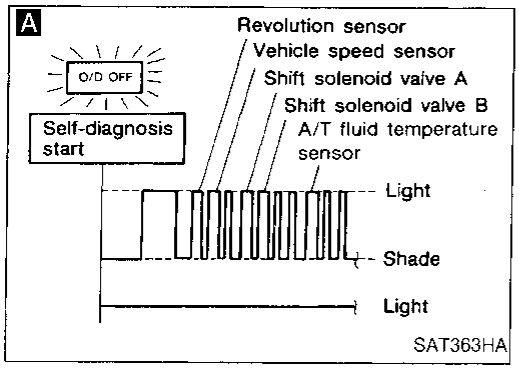

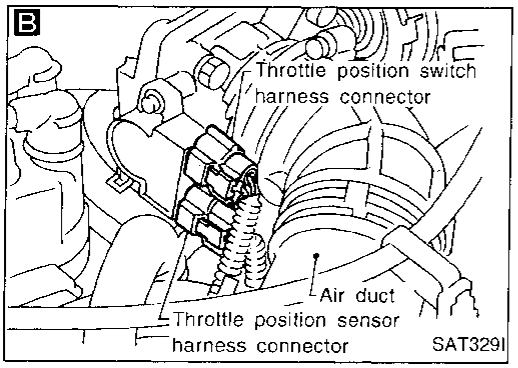

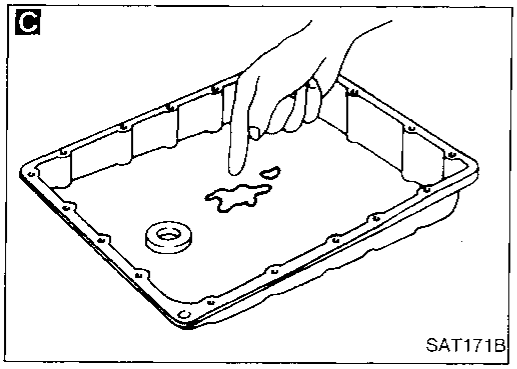

11. A/T Does Not Shift: $D_3 \rightarrow D_4$

SYMPTOM:

- **A/T does not shift from D_3 to D_4 at the specified speed.**
- **A/T must be warm before D_3 to D_4 shift will occur.**

Are 7. Vehicle Does Not Creep Forward In "D", "2" Or "1" Position and 8. Vehicle Cannot Be Started From D_1 OK?

- No → Go to 7. Vehicle Does Not Creep Forward In "D", "2" Or "1" Position and 8. Vehicle Cannot Be Started From D_1, AT-109, 110.
- Yes ↓

A

Does self-diagnosis, after cruise test, show damage to any of the following circuits?
- Inhibitor switch
- Overdrive control switch
- A/T fluid temperature sensor
- Revolution sensor
- Shift solenoid valve A or B
- Vehicle speed sensor

- Yes → Check damaged circuit. Refer to "TROUBLE DIAGNOSIS FOR DTC P0705, P0710, P0720, P0750, P0755 or VHCL SPEED SEN·MTR", AT-55, 61, 64, 91, 94 or 102.
- No ↓

B

Check throttle position sensor. Refer to EC section ["Throttle Position Sensor (DTC: 0403)", "TROUBLE DIAGNOSIS FOR DTC P0120"].

- NG → Repair or replace throttle position sensor.
- OK ↓

C

1. Remove oil pan.
2. Check A/T fluid condition.

- NG → 1. Remove control valve assembly. Refer to AT-132. 2. Check the following items:
  - Shift valve B
  - Overrun clutch control valve
  - Shift solenoid valve B
  - Pilot valve
  - Pilot filter
  3. Disassemble A/T.
  4. Check the following items:
  - Servo piston assembly
  - Brake band
  - Torque converter
  - Oil pump assembly
  - OK ↓
- OK ↓

1. Remove control valve assembly. Refer to AT-132.
2. Check the following items:
- Shift valve B
- Overrun clutch control valve
- Shift solenoid valve B
- Pilot valve
- Pilot filter

OK ↓

Check again.

- NG → 1. Perform A/T control unit input/output signal inspection. 2. If NG, recheck A/T control unit pin terminals for damage or loose connection with harness connector.
- OK ↓

INSPECTION END

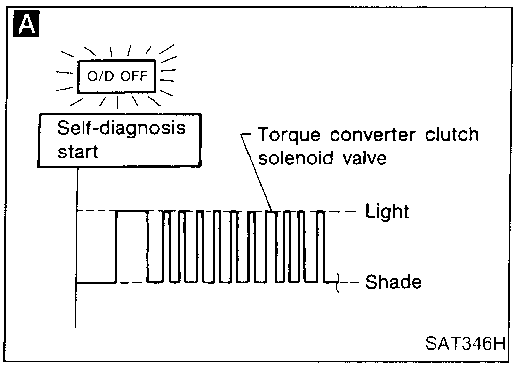

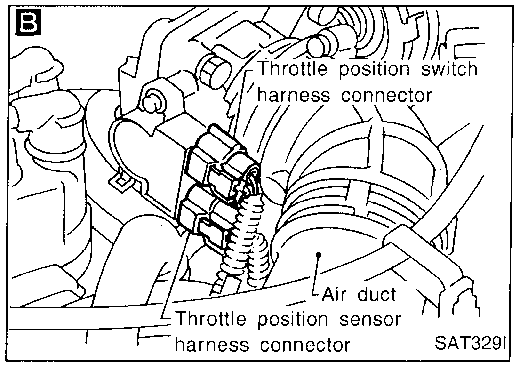

12. A/T Does Not Perform Lock-up

SYMPTOM:

A/T does not perform lock-up at the specified speed.

A

Does self-diagnosis show damage to torque converter clutch solenoid valve circuit after cruise test?

- Yes → Check torque converter clutch solenoid valve circuit. Refer to "TROUBLE DIAGNOSIS FOR DTC P0740", AT-80.
- No ↓

B

Check throttle position sensor. Refer to EC section ["Throttle Position Sensor (DTC: 0403)", "TROUBLE DIAGNOSIS FOR DTC P0120"].

- NG → Repair or replace throttle position sensor.
- OK ↓

1. Remove control valve. Refer to AT-132.
2. Check following items:
   - Torque converter clutch control valve
   - Torque converter relief valve
   - Torque converter clutch solenoid valve
   - Pilot valve
   - Pilot filter

- NG → Repair or replace damaged parts.
- OK ↓

Check again.

- NG → 1. Perform A/T control unit input/output signal inspection. 2. If NG, recheck A/T control unit pin terminals for damage or loose connection with harness connector.
- OK ↓

INSPECTION END

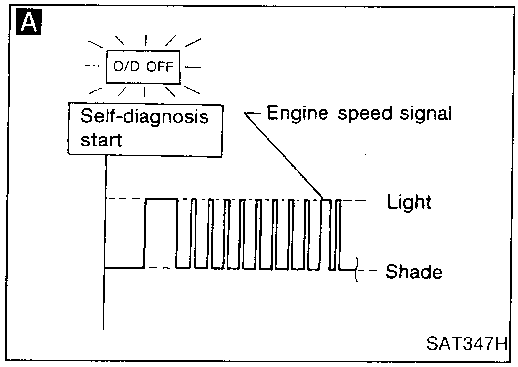

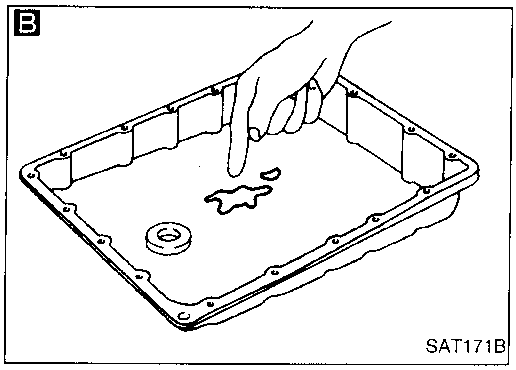

13. A/T Does Not Hold Lock-up Condition

SYMPTOM:

A/T does not hold lock-up condition for more than 30 seconds.

A

Does self-diagnosis show damage to engine speed signal circuit after cruise test?

Yes → Check engine speed signal circuit. Refer to "TROUBLE DIAGNOSIS FOR DTC P0725", AT-66.

No ↓

B

1. Remove oil pan.
2. Check A/T fluid condition.

NG → 1. Remove control valve assembly. Refer to AT-132. 2. Check the following items: • Torque converter clutch control valve • Pilot valve • Pilot filter 3. Disassemble A/T. 4. Check torque converter and oil pump assembly.

OK ↓

1. Remove control valve assembly. Refer to AT-132.
2. Check the following items:
   - Torque converter clutch control valve
   - Pilot valve
   - Pilot filter

OK → OK

Check again.

NG → 1. Perform A/T control unit input/output signal inspection. 2. If NG, recheck A/T control unit pin terminals for damage or loose connection with harness connector.

OK ↓

INSPECTION END

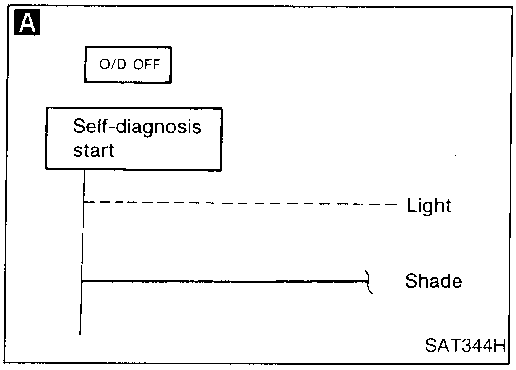

14. Lock-up Is Not Released

SYMPTOM:

Lock-up is not released when accelerator pedal is released.

Does "ECU INPUT SIGNALS" in Data Monitor show damage to closed throttle position switch circuit?

Yes → Check closed throttle position switch circuit. Refer to "TROUBLE DIAGNOSIS FOR DTC P0705", AT-58.

OR

A

Does self-diagnosis show damage to closed throttle position switch circuit?

No ↓

Check again.

NG → 1. Perform A/T control unit input/output signal inspection. 2. If NG, recheck A/T control unit pin terminals for damage or loose connection with harness connector.

OK ↓

INSPECTION END

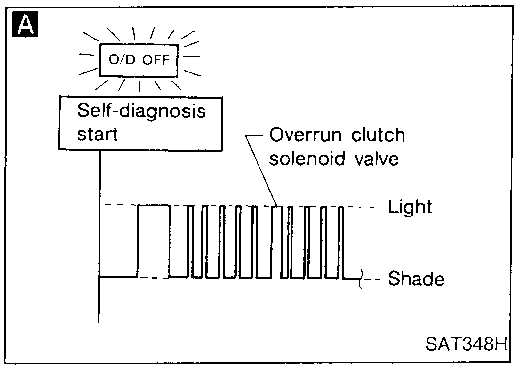

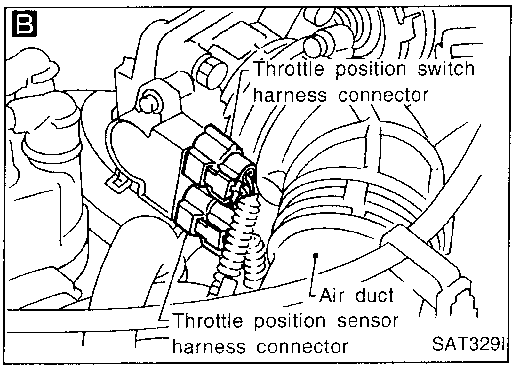

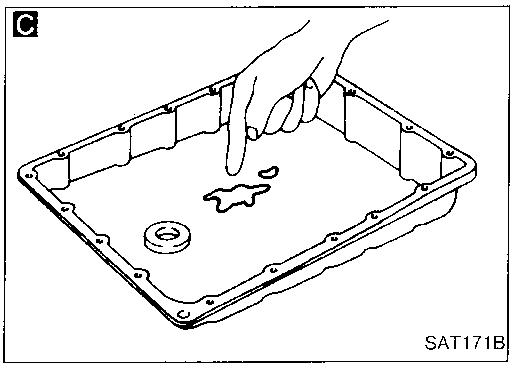

15. Engine Speed Does Not Return To Idle (Light Braking $D_4 \rightarrow D_3$)

SYMPTOM:

- **Engine speed does not smoothly return to idle when A/T shifts from D_4 to D_3.**
- **Vehicle does not decelerate by engine brake when turning overdrive control switch OFF.**
- **Vehicle does not decelerate by engine brake when shifting A/T from "D" to "2" position.**

A

Does self-diagnosis show damage to overrun clutch solenoid valve circuit after cruise test?

- Yes → Check overrun clutch solenoid valve circuit. Refer to "TROUBLE DIAGNOSIS FOR DTC P1760", AT-99.
- No ↓

B

Check throttle position sensor. Refer to EC section ["Throttle Position Sensor (DTC: 0403)", "TROUBLE DIAGNOSIS FOR DTC P0120"].

- NG → Repair or replace throttle position sensor.
- OK ↓

C

1. Remove oil pan.
2. Check A/T fluid condition.

- NG → 1. Remove control valve assembly. Refer to AT-132.
  2. Check the following items:
  - Overrun clutch control valve
  - Overrun clutch reducing valve
  - Overrun clutch solenoid valve
  3. Disassemble A/T.
  4. Check the following items:
  - Overrun clutch assembly
  - Oil pump assembly
- OK ↓

1. Remove control valve assembly. Refer to AT-132.
2. Check the following items:
   - Overrun clutch control valve
   - Overrun clutch reducing valve
   - Overrun clutch solenoid valve

- OK ↓
- OK → (from NG above)

Check again.

- NG → 1. Perform A/T control unit input/output signal inspection.
  2. If NG, recheck A/T control unit pin terminals for damage or loose connection with harness connector.
- OK ↓

INSPECTION END

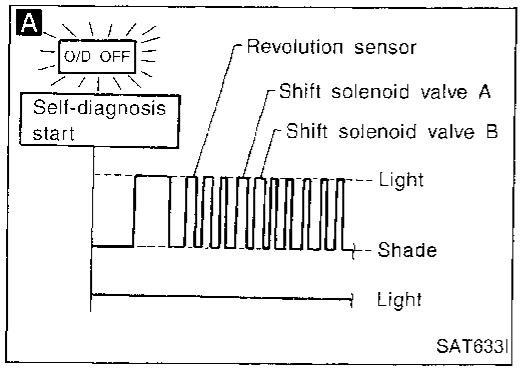

16. Vehicle Does Not Start From D_1

SYMPTOM:

Vehicle does not start from D_1 on Cruise test — Part 2.

A

Does self-diagnosis show damage to vehicle speed sensor·A/T (revolution sensor), shift solenoid valve A, B or vehicle speed sensor·MTR after cruise test?

Yes → Check damaged circuit. Refer to "TROUBLE DIAGNOSIS FOR DTC P0720, P0750, P0755 or VHCL SPEED SEN·MTR", AT-64, 91, 94 or 102.

No ↓

Check again.

NG → 1. Perform A/T control unit input/output signal inspection. 2. If NG, recheck A/T control unit pin terminals for damage or loose connection with harness connector.

OK ↓

Go to 8. Vehicle Cannot Be Started From D_1, AT-110.

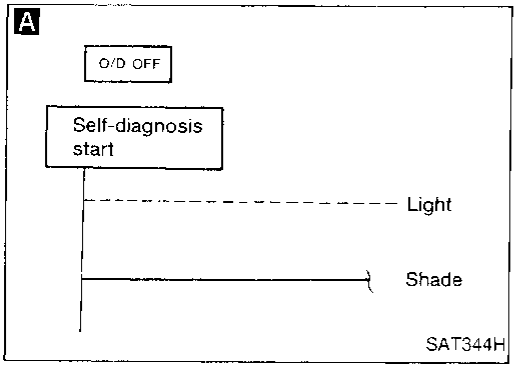

17. A/T Does Not Shift: $D_4 \rightarrow D_3$, When Overdrive Control Switch "ON" → "OFF"

SYMPTOM:

A/T does not shift from D_4 to D_3 when changing overdrive control switch to "OFF" position.

Does "ECU INPUT SIGNALS" in Data Monitor show damage to overdrive control switch circuit?

Yes → Check overdrive control switch circuit. Refer to "TROUBLE DIAGNOSIS FOR DTC P0705", AT-55.

— OR —

A

Does self-diagnosis show damage to overdrive control switch circuit?

No ↓

Go to 10. A/T Does Not Shift: $D_2 \rightarrow D_3$, AT-112.

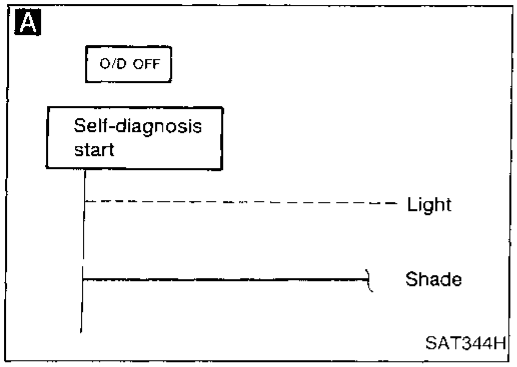

18. A/T Does Not Shift: $D_3 \rightarrow 2_2$, When Selector Lever "D" → "2" Position

SYMPTOM:

A/T does not shift from D_3 to 2_2 when changing selector lever from "D" to "2" position.

Does "ECU INPUT SIGNALS" in Data Monitor show damage to inhibitor switch circuit?

— OR —

A

Does self-diagnosis show damage to inhibitor switch circuit?

Yes → Check inhibitor switch circuit. Refer to "TROUBLE DIAGNOSIS FOR DTC P0705", AT-55.

No → Go to 9. A/T Does Not Shift: $D_1 \rightarrow D_2$ Or Does Not Kickdown: $D_4 \rightarrow D_2$, AT-111.

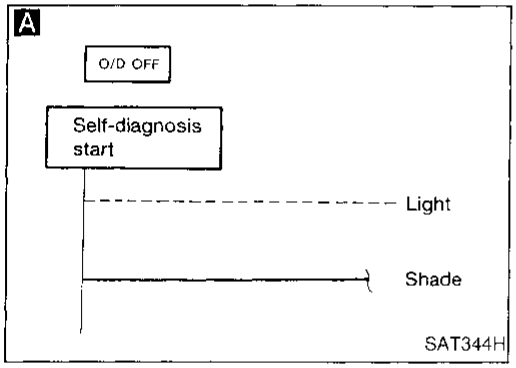

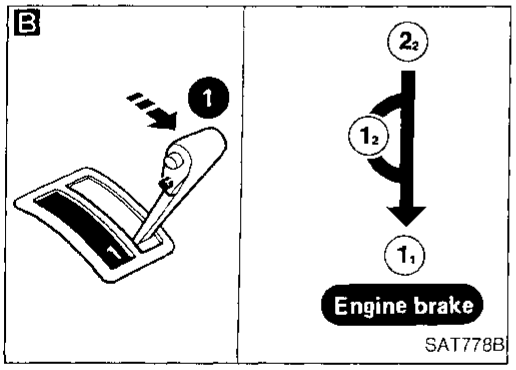

19. A/T Does Not Shift: $2_2 \rightarrow 1_1$, When Selector Lever "2" → "1" Position

SYMPTOM:

A/T does not shift from 2_2 to 1_1 when changing selector lever from "2" to "1" position.

Does "ECU INPUT SIGNALS" in Data Monitor show damage to inhibitor switch circuit?

— OR —

A

Does self-diagnosis show damage to inhibitor switch circuit?

Yes → Check inhibitor switch circuit. Refer to "TROUBLE DIAGNOSIS FOR DTC P0705", AT-55.

No → B

Check again.

NG → 1. Perform A/T control unit input/output signal inspection.
2. If NG, recheck A/T control unit pin terminals for damage or loose connection with harness connector.

OK → INSPECTION END

20. Vehicle Does Not Decelerate By Engine Brake

SYMPTOM:

Vehicle does not decelerate by engine brake when shifting from 2_2 (1_2) to 1_1.

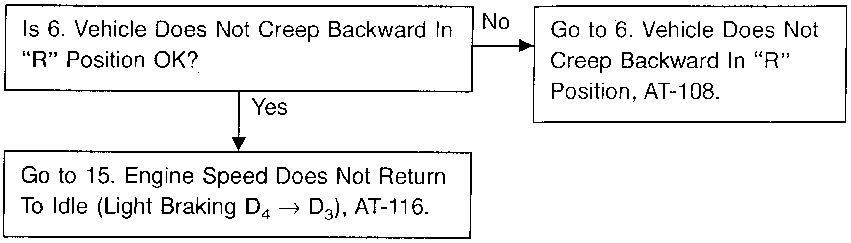

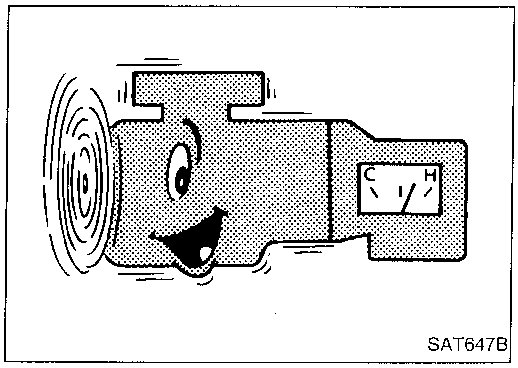

SAT647B

Final Check

STALL TESTING

Stall test procedure

1. Check A/T and engine fluid levels. If necessary, add.
2. Drive vehicle for approx. 10 minutes or until engine oil and ATF reach operating temperature.
   ATF operating temperature:
   50 - 80°C (122 - 176°F)

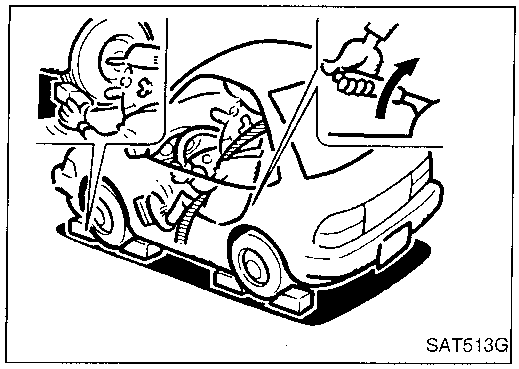
SAT513G

3. Set parking brake and block wheels.
4. Install a tachometer where it can be seen by driver during test.

- **It is good practice to put a mark on point of specified engine rpm on indicator.**

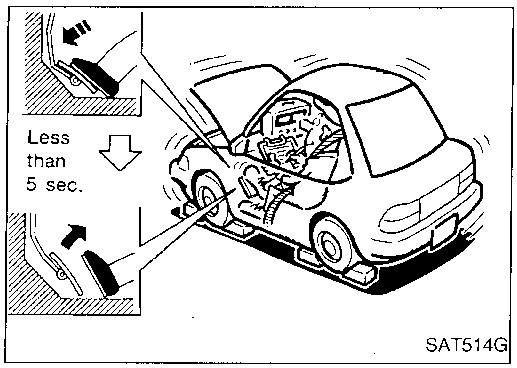

SAT514G

5. Start engine, apply foot brake, and place selector lever in "D" position.
6. Accelerate to wide-open throttle gradually while applying foot brake.
7. Quickly note the engine stall revolution and immediately release throttle.

- **During test, never hold throttle wide-open for more than 5 seconds.**
  Stall revolution:
  2,440 - 2,690 rpm

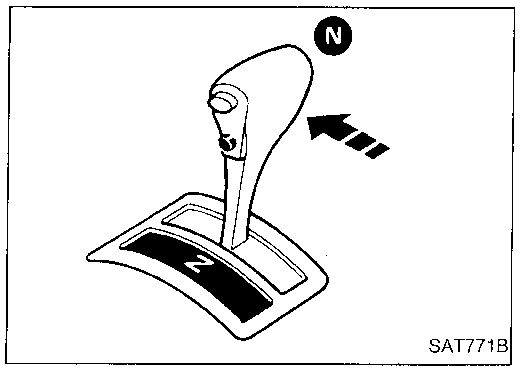

SAT771B

8. Move selector lever to "N" position.
9. Cool off ATF.

- **Run engine at idle for at least one minute.**

10. Repeat steps 5 through 9 with selector lever in "2", "1" and "R" positions.

Final Check (Cont'd)

JUDGEMENT OF STALL TEST

The test result and possible damaged components relating to each result are shown in the illustration.
In order to pinpoint the possible damaged components, follow the WORK FLOW shown in AT-34.

Note

Stall revolution is too high in "D" or "2" position:

- Slippage occurs in 1st gear but not in 2nd and 3rd gears. ..... Low one-way clutch slippage
- Slippage occurs at the following gears:
  1st through 3rd gears in "D" position and engine brake functions.
  1st and 2nd gears in "2" position and engine brake functions with accelerator pedal released (fully closed throttle). ..... Forward clutch or forward one-way clutch slippage

Stall revolution is too high in "R" position:

- Engine brake does not function in "1" position. ..... Low & reverse brake slippage
- Engine brake functions in "1" position. ..... Reverse clutch slippage

Stall revolution within specifications:

- Vehicle does not achieve speed of more than 80 km/h. ..... One-way clutch seizure in torque converter housing

CAUTION:
Be careful since automatic fluid temperature increases abnormally.

- Slippage occurs in 3rd and 4th gears in "D" position. ..... High clutch slippage
- Slippage occurs in 2nd and 4th gear in "D" position. ..... Brake band slippage

Stall revolution less than specifications:

- Poor acceleration during starts. ..... One-way clutch seizure in torque converter

JUDGEMENT OF STALL TEST

Selector lever position	Judgement		
D	L	O	H
2	L	O	H
1	L	O	O
R	L	H	H

O : Stall revolution is normal.
H : Stall revolution is higher than specified.
L : Stall revolution is lower than specified.

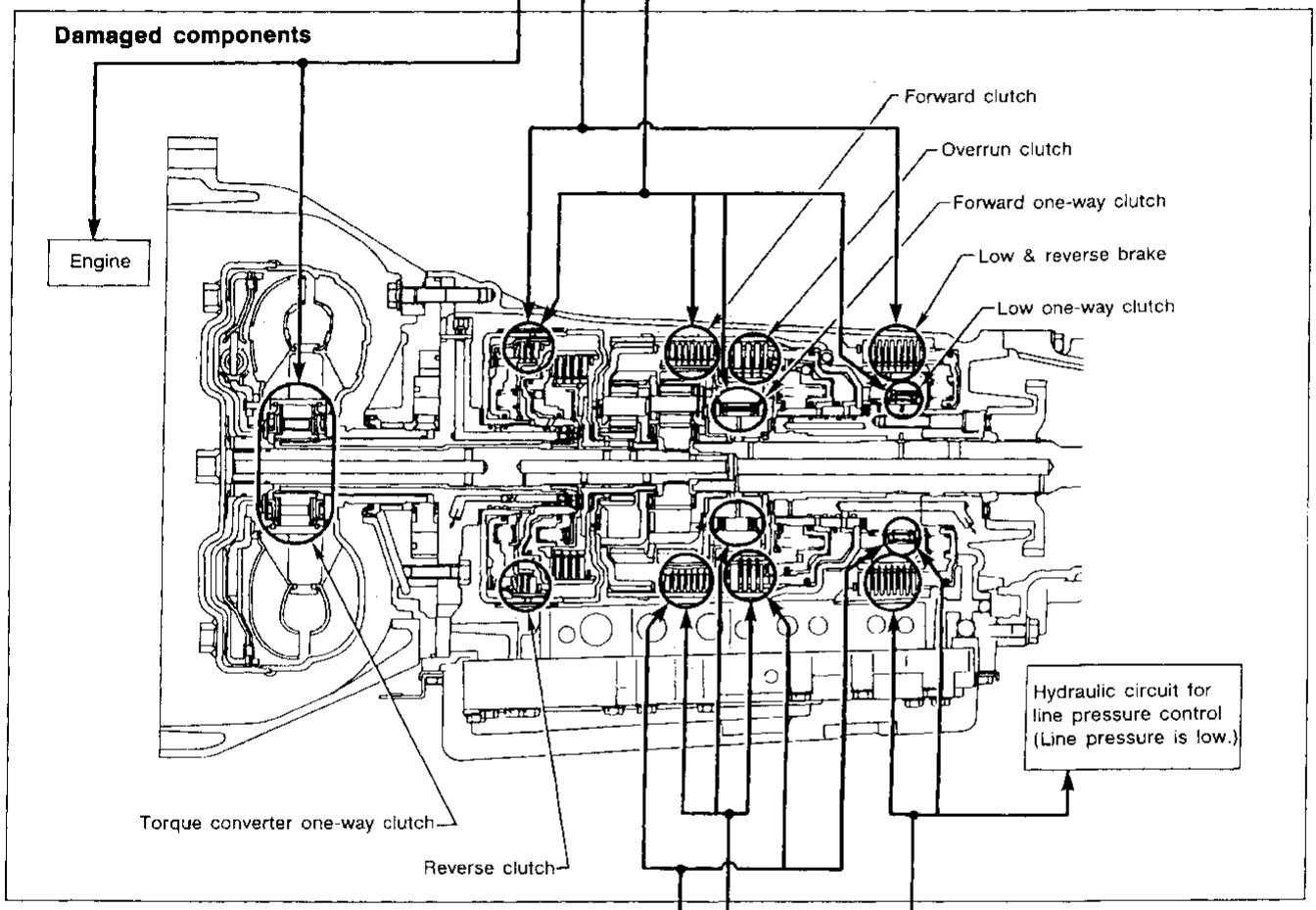

Clutches and brakes except high clutch and brake band are OK. (Condition of high clutch and brake band cannot be confirmed by stall test.)

Selector lever position	Judgement			
D	H	H	H	O
2	H	H	H	O
1	O	H	H	O
R	O	O	H	O

SAT392H

Final Check (Cont'd)

PRESSURE TESTING

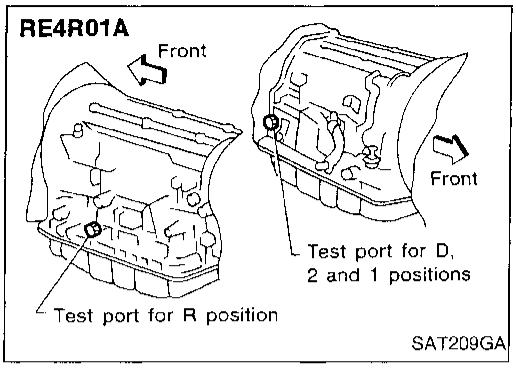

- Location of pressure test ports.
- **Always replace line pressure plugs as they are self-sealing bolts.**

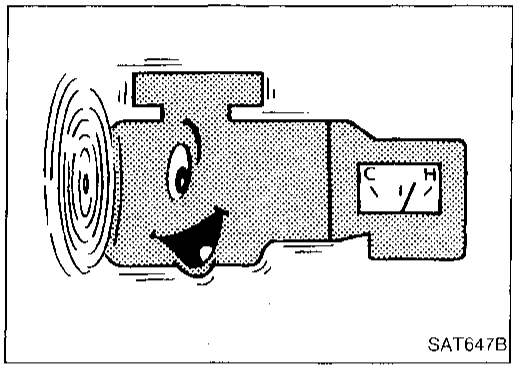

Line pressure test procedure

1. Check A/T and engine fluid levels. If necessary, add fluid.
2. Drive vehicle for approx. 10 minutes or until engine oil and ATF reach operating temperature.
   ATF operating temperature:
   50 - 80°C (122 - 176°F)

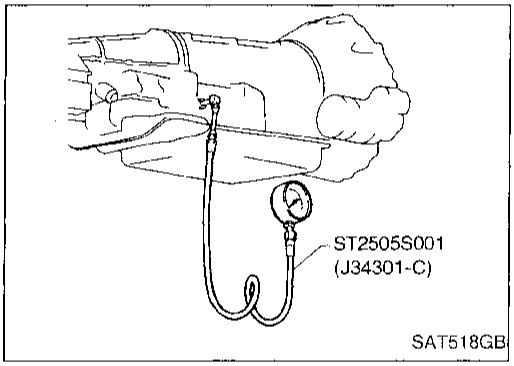

3. Install pressure gauge to corresponding line pressure port.

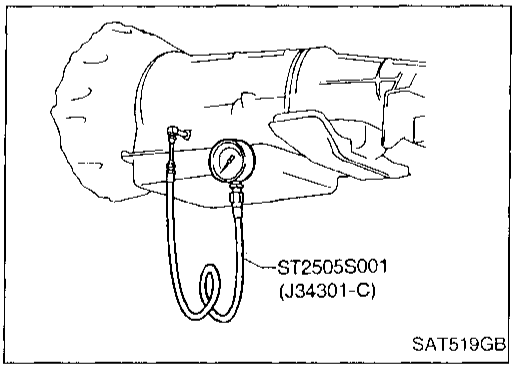

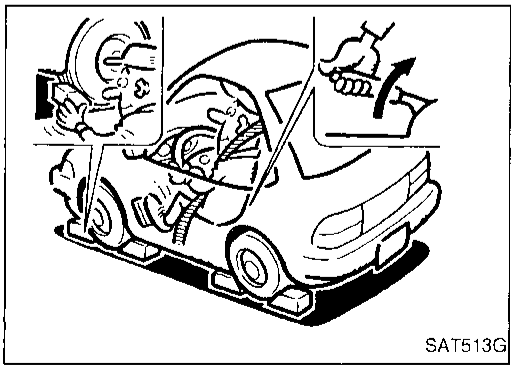

4. Set parking brake and block wheels.
- **Continue to depress brake pedal fully while line pressure test is being performed at stall speed.**

Final Check (Cont'd)

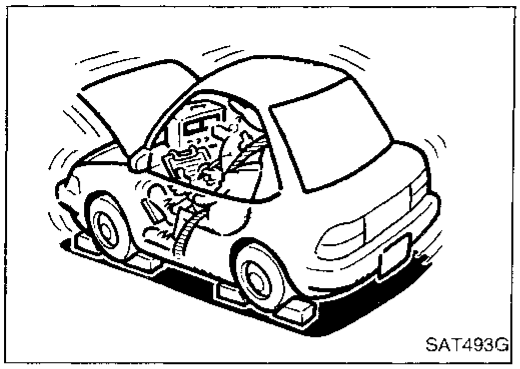

5. Start engine and measure line pressure at idle and stall speed.
- **When measuring line pressure at stall speed, follow the stall test procedure.**
  Line pressure:
  Refer to SDS, AT-214.

JUDGEMENT OF LINE PRESSURE TEST

Judgement		Suspected parts
At idle	Line pressure is low in all positions.	• Oil pump wear • Control piston damage • Pressure regulator valve or plug sticking • Spring for pressure regulator valve damaged • Fluid pressure leakage between oil strainer and pressure regulator valve • Clogged strainer
	Line pressure is low in particular position.	• Fluid pressure leakage between manual valve and particular clutch • For example, line pressure is: — Low in "R" and "1" positions, but — Normal in "D" and "2" positions. Then, fluid leakage exists at or around low and reverse brake circuit. Refer to "OPERATION OF CLUTCH AND BRAKE", AT-16.
	Line pressure is high.	• Mal-adjustment of throttle position sensor • Fluid temperature sensor damaged • Line pressure solenoid valve sticking • Short circuit of line pressure solenoid valve circuit • Pressure modifier valve sticking • Pressure regulator valve or plug sticking • Open in dropping resistor circuit
At stall speed	Line pressure is low.	• Mal-adjustment of throttle position sensor • Line pressure solenoid valve sticking • Short circuit of line pressure solenoid valve circuit • Pressure regulator valve or plug sticking • Pressure modifier valve sticking • Pilot valve sticking

Description

- The mechanical key interlock mechanism also operates as a shift lock:
  With the key switch turned to "ON", the selector lever cannot be shifted from "P" (parking) to any other position unless the brake pedal is depressed.
  With the key removed, the selector lever cannot be shifted from "P" to any other position.
  The key cannot be removed unless the selector lever is placed in "P".
- The shift lock and key interlock mechanisms are controlled by the ON-OFF operation of the shift lock solenoid and by the operation of the rotator and slider located inside the key cylinder, respectively.

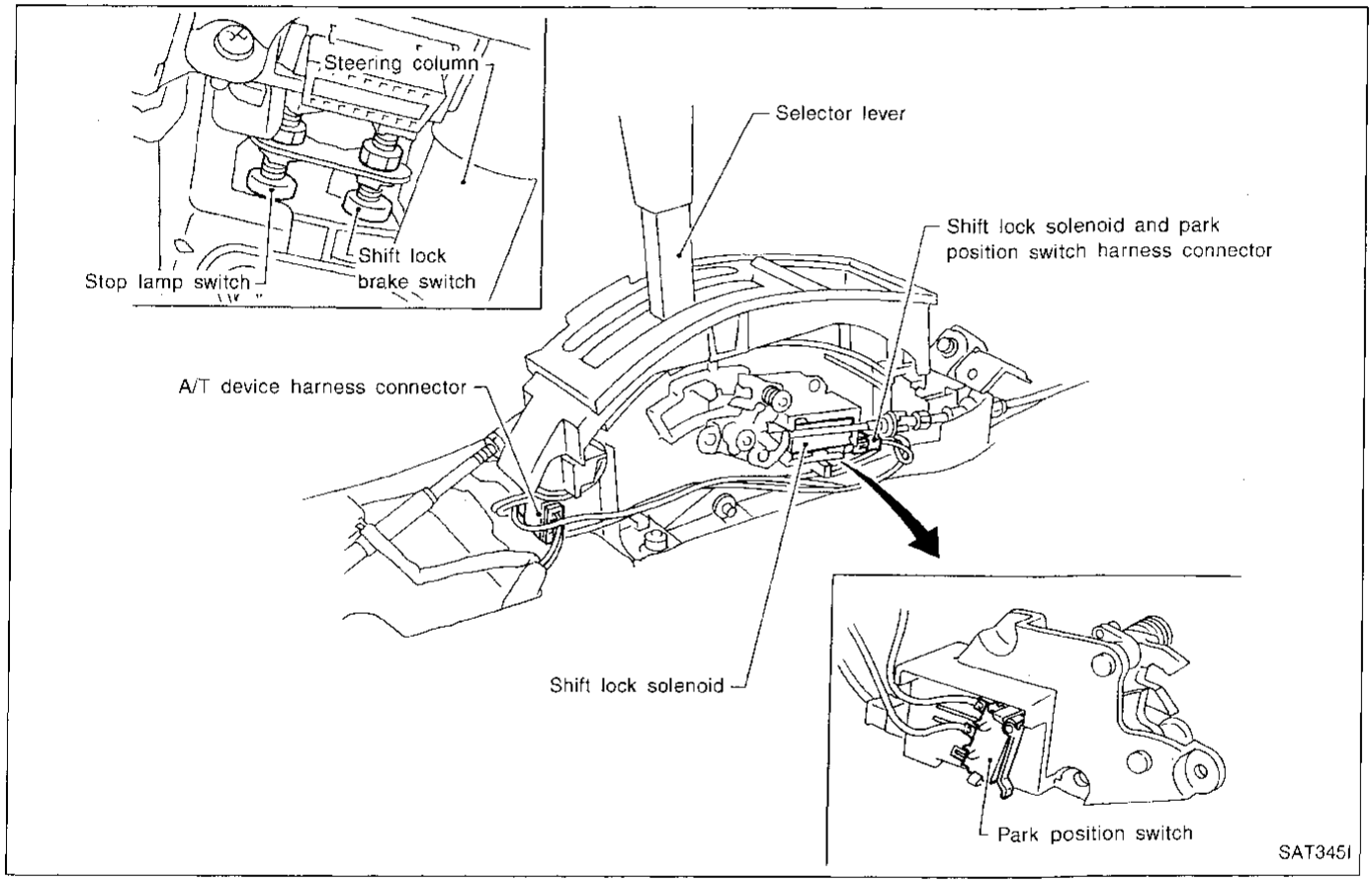

Wiring Diagram — SHIFT —

AT-SHIFT-01

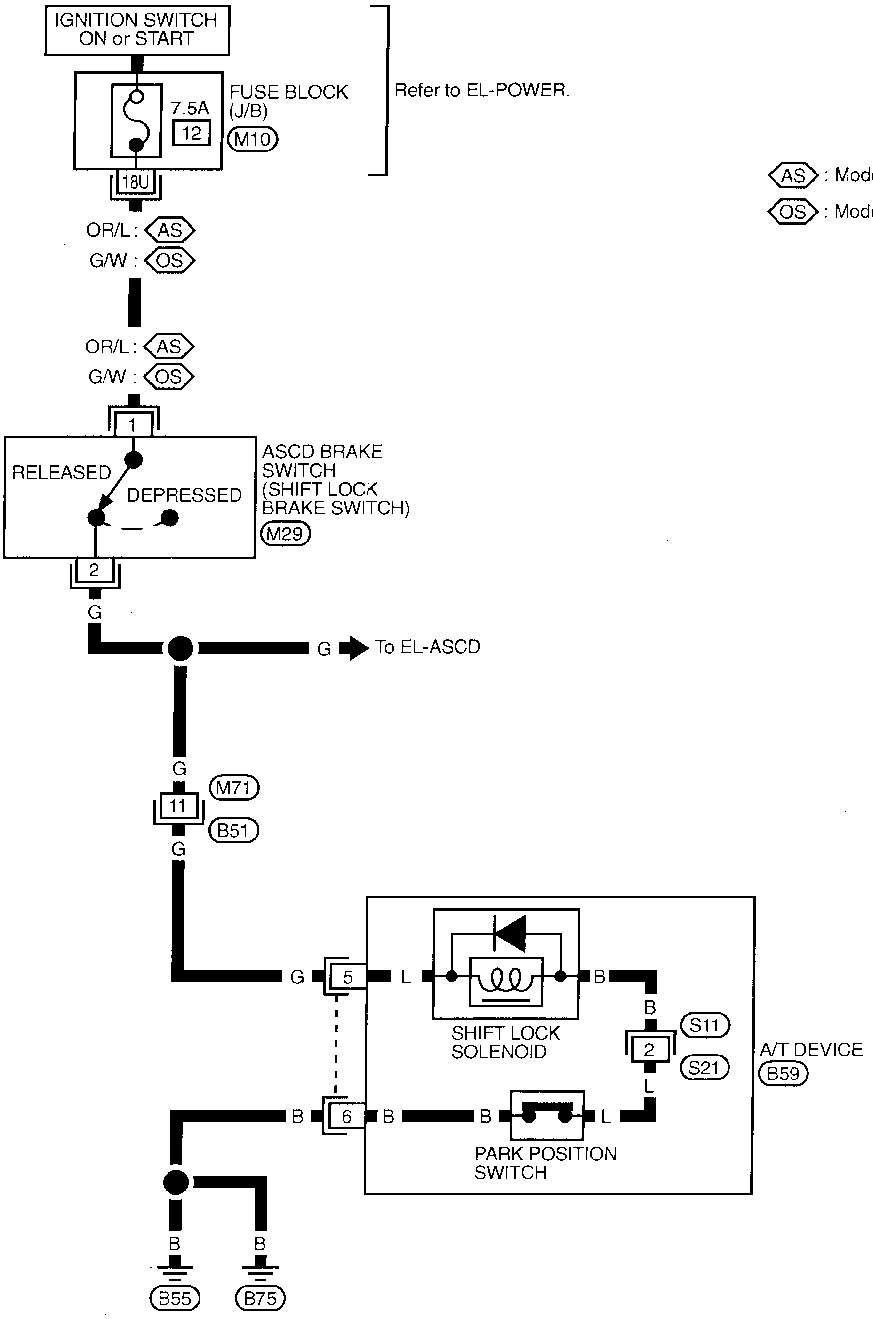

AS : Models with ASCD

OS : Models without ASCD

Refer to last page (Foldout page).

M10

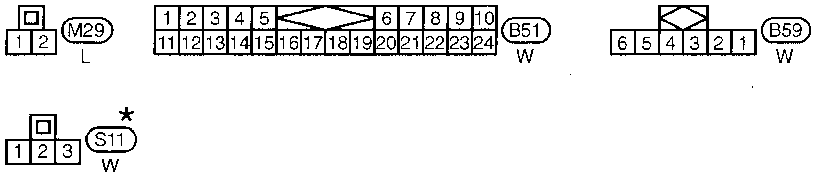

★ : This connector is not shown in "HARNESS LAYOUT" in EL section.

MAT506A

Diagnostic Procedure

SYMPTOM 1:

- **Selector lever cannot be moved from "P" position with key in "ON" position and brake pedal applied.**
- **Selector lever can be moved from "P" position with key in "ON" position and brake pedal released.**
- **Selector lever can be moved from "P" position when key is removed from key cylinder.**

SYMPTOM 2:

Ignition key cannot be removed when selector lever is set to "P" position. It can be removed when selector lever is set to any position except "P".

Check key interlock cable for damage.
- NG → Repair key interlock cable. Refer to "Key Interlock Cable", AT-129.
- OK ↓

Check selector lever position for damage.
- NG → Check selector lever. Refer to "ON-VEHICLE SERVICE — Inhibitor Switch and Manual Control Linkage Adjustment", AT-134.
- OK ↓

A

CHECK POWER SOURCE.

1. Turn ignition switch to "ON" position. (Do not start engine.)
2. Check voltage between ASCD brake (shift lock brake) switch harness terminal ① and ground.

Voltage: Battery voltage

- NG → Check the following items:
  1. Harness for short or open between battery and ASCD brake (shift lock brake) switch harness terminal ①
  2. Fuse
  3. Ignition switch (Refer to EL section.)
- OK ↓

B

CHECK INPUT SIGNAL (BRAKE SWITCH).

Turn ignition switch to "ON" position. (Do not start engine.)

- Check voltage between A/T device harness terminal ⑤ and ground.

Brake pedal	Voltage
Depressed	0V
Released	Battery voltage

- NG → Check the following items:
  1. Harness for short or open between A/T device harness connector ⑤ and ASCD brake (shift lock brake) switch harness connector ②
  2. ASCD brake (shift lock brake) switch (Refer to "Component Check", AT-131.)
- OK ↓

Ⓐ

A

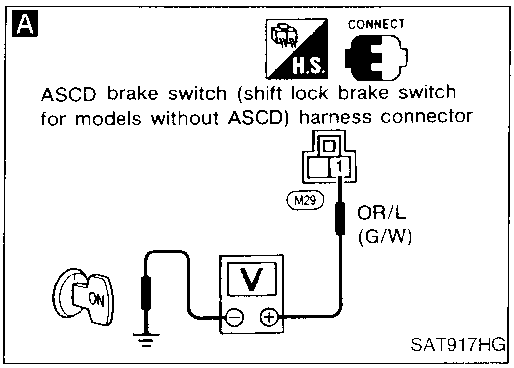

B

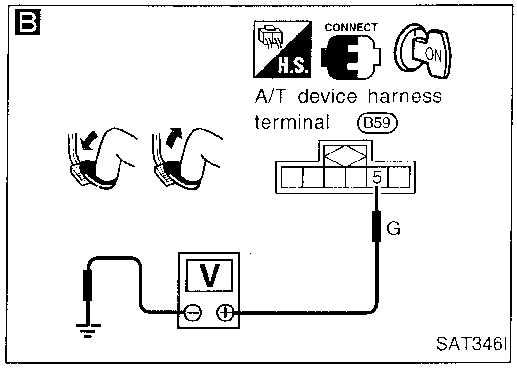

Diagnostic Procedure (Cont'd)

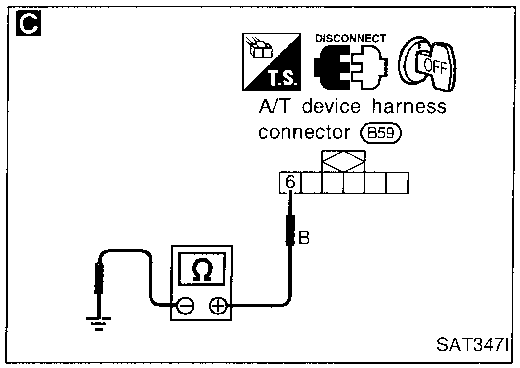

Ⓐ

C

CHECK GROUND CIRCUIT.
1. Turn ignition switch to "OFF" position.
2. Disconnect A/T device harness connector.
3. Check continuity between A/T device harness terminal ⑥ and ground.

NG → Repair harness or connector.

OK ↓

CHECK PARK POSITION SWITCH.
(Refer to "Component Check", AT-130.)

NG → Replace park position switch.

OK ↓

CHECK SHIFT LOCK SOLENOID.
(Refer to "Component Check", AT-130.)

NG → Replace shift lock solenoid.

OK ↓

Reconnect shift lock harness connector.

↓

Turn ignition switch from "OFF" to "ON" position. (Do not start engine.)

↓

Recheck shift lock operation.

NG → 1. Perform A/T device input/output signal inspection test.
2. If NG, recheck harness connector connection.

OK ↓

INSPECTION END

Key Interlock Cable

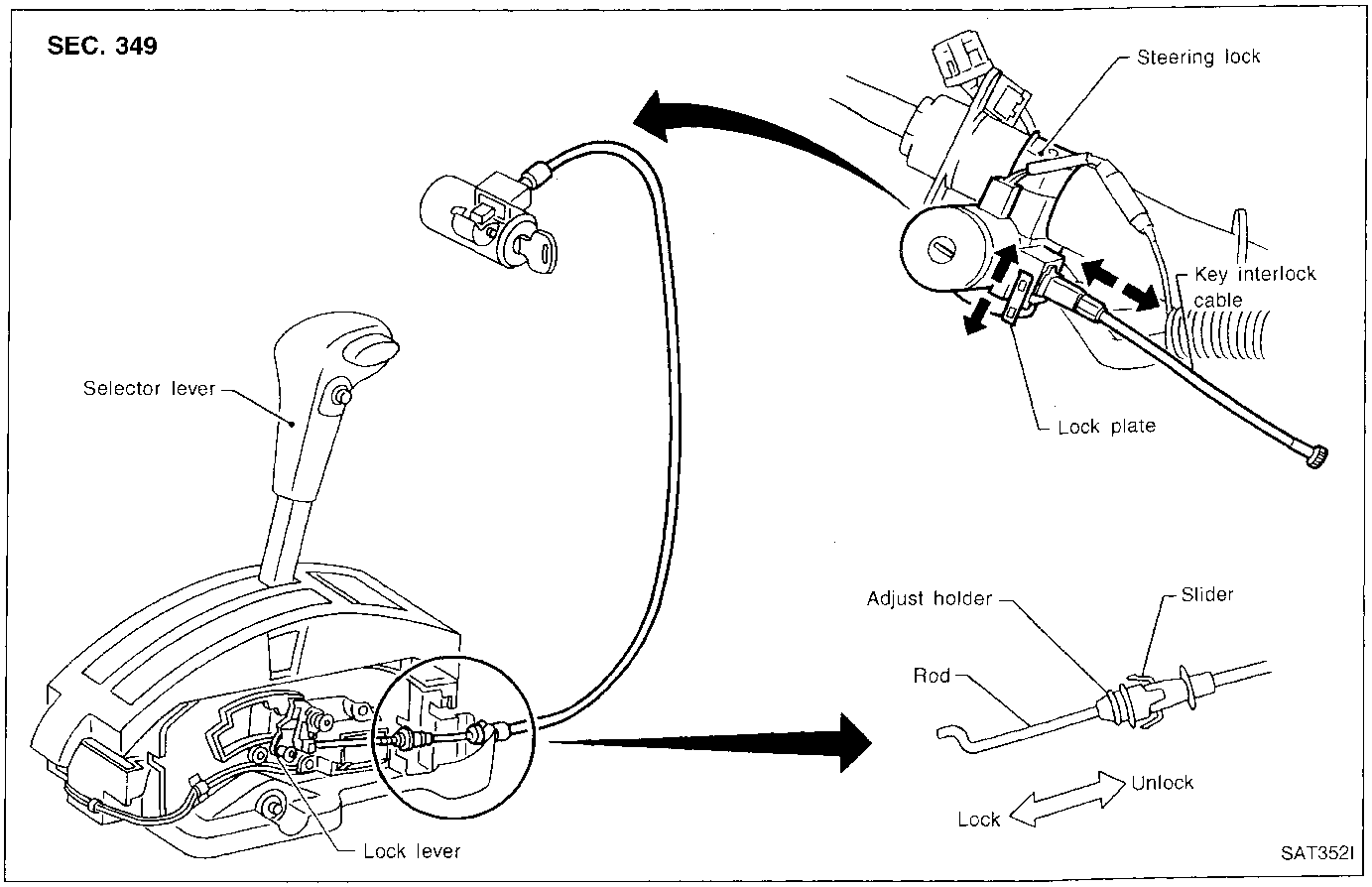

CAUTION:

- **Install key interlock cable in such a way that it will not be damaged by sharp bends, twists or interference with adjacent parts.**
- **After installing key interlock cable to control device, make sure that casing cap and bracket are firmly secured in their positions. If casing cap can be removed with an external load of less than 39.2 N (4.0 kg, 8.8 lb), replace key interlock cable with new one.**

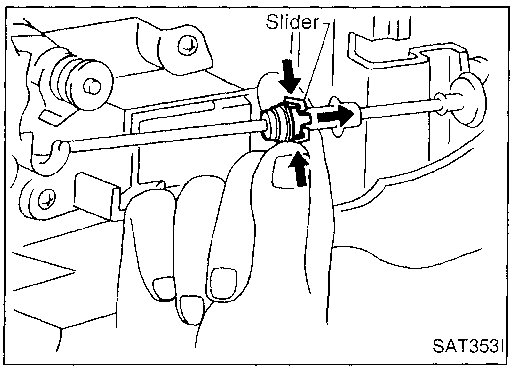

REMOVAL

Unlock slider from adjuster holder and remove rod from cable.

Key Interlock Cable (Cont'd)

INSTALLATION

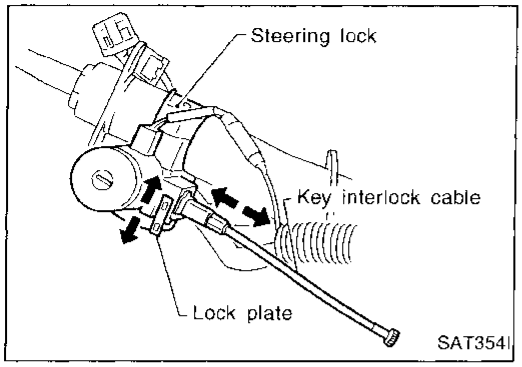

1. Set key interlock cable to steering lock assembly and install lock plate.
2. Clamp cable to steering column and fix to control cable with band.
3. Set selector lever to P position.

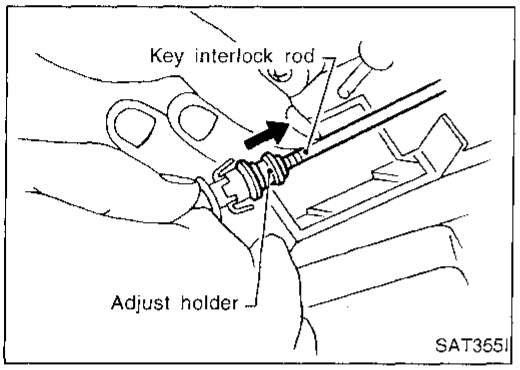

4. Insert interlock rod into adjuster holder.

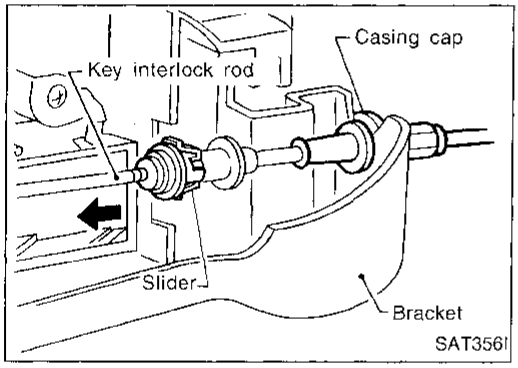

5. Install casing cap to bracket.
6. Move slider in order to fix adjuster holder to interlock rod.

Component Check

SHIFT LOCK SOLENOID

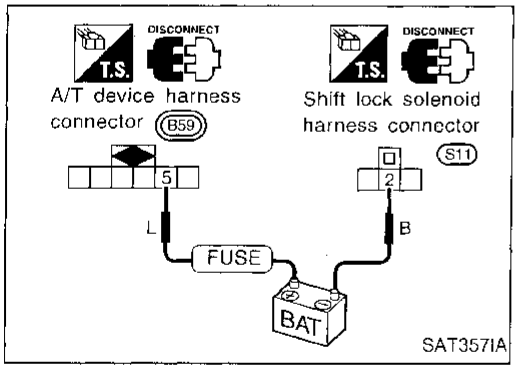

- Check operation by applying battery voltage between shift lock solenoid harness connector terminal ② and A/T device harness connector terminal ⑤.

PARK POSITION SWITCH

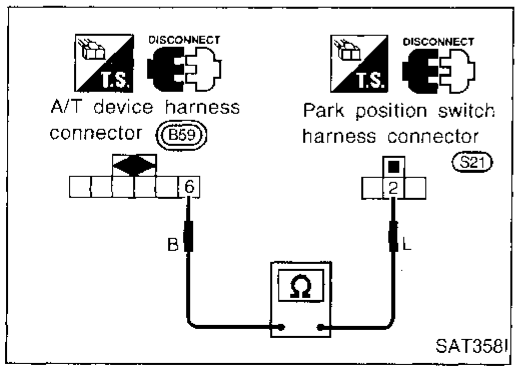

- Check continuity between park position switch harness connector terminal ② and A/T device harness connector terminal ⑥.

Condition	Continuity
When selector lever is set in "P" position and selector lever button is released	No
Except above	Yes

Component Check (Cont'd)

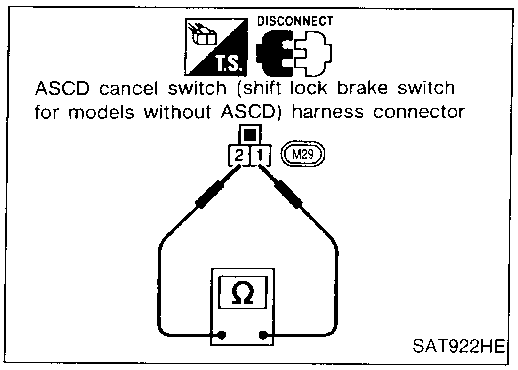

ASCD BRAKE SWITCH (SHIFT LOCK BRAKE SWITCH FOR MODELS WITHOUT ASCD)

- Check continuity between ASCD brake (shift lock brake) switch harness connector terminals ① and ② .

Condition	Continuity
When brake pedal is depressed	Yes
When brake pedal is released	No

Check ASCD brake (shift lock brake) switch after adjusting brake pedal — refer to BR section.

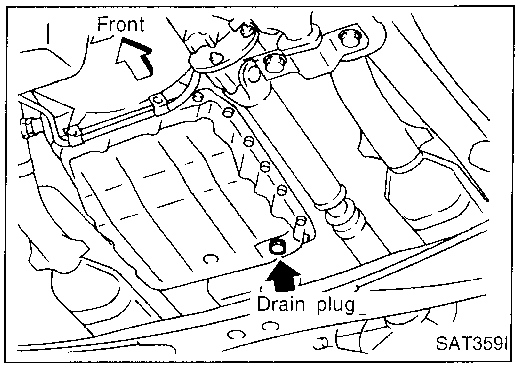

Control Valve Assembly and Accumulators Inspection

1. Remove exhaust front tube.
2. Remove oil pan and gasket and drain ATF.

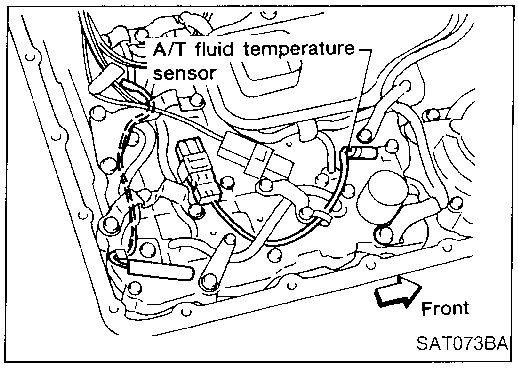

3. Remove A/T fluid temperature sensor if necessary.
4. Remove oil strainer.

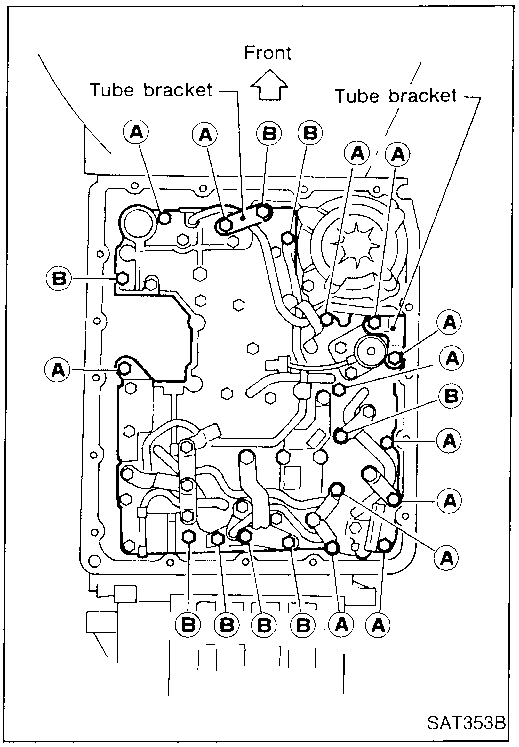

5. Remove control valve assembly by removing fixing bolts and disconnecting harness connector.

Bolt length and location

Bolt symbol	ℓ mm (in)
Ⓐ	33 (1.30)
Ⓑ	45 (1.77)

6. Remove solenoids and valves from valve body if necessary.
7. Remove terminal cord assembly if necessary.

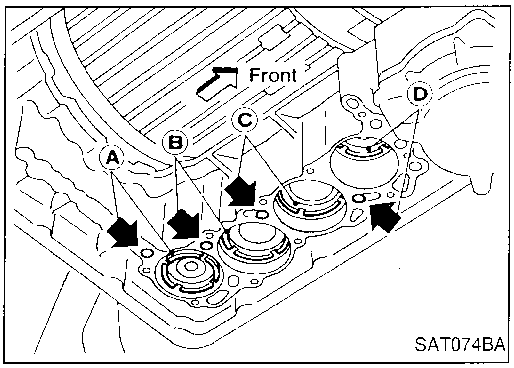

8. Remove accumulator Ⓐ, Ⓑ, Ⓒ and Ⓓ by applying compressed air if necessary.
- **Hold each piston with rag.**
9. Reinstall any part removed.
- **Always use new sealing parts.**

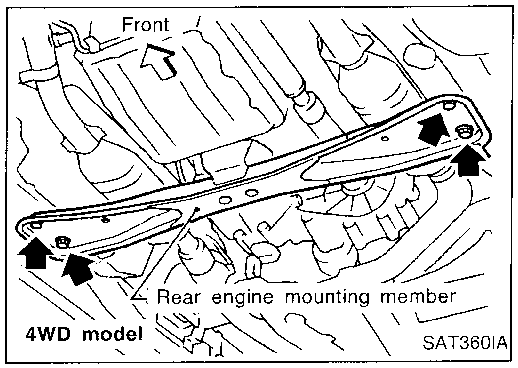

Revolution Sensor Replacement

— 4WD model —

1. Remove rear engine mounting member from side member while supporting A/T with transfer case with jack. Tighten rear engine mounting member to the specified torque. Refer to EM section ("ENGINE REMOVAL").
2. Lower A/T with transfer case as much as possible.
3. Remove revolution sensor from A/T.
4. Reinstall any part removed.

- **Always use new sealing parts.**

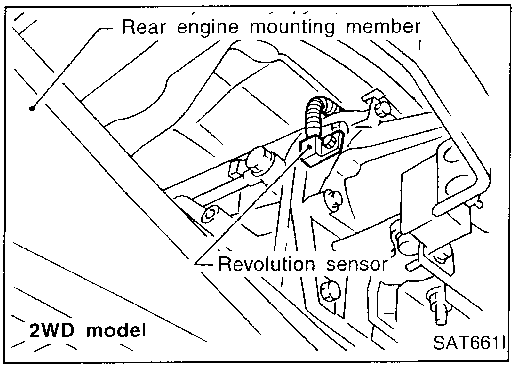

— 2WD model —

- Remove revolution sensor from A/T.
- **Always use new sealing parts.**

Rear Oil Seal Replacement

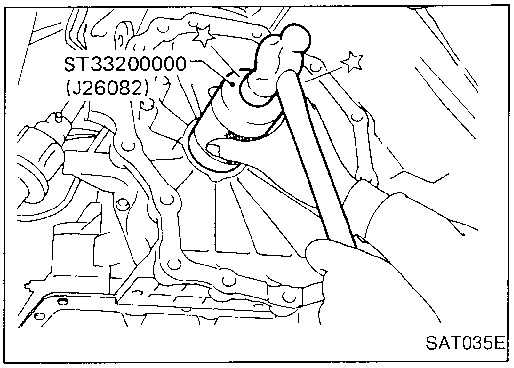

— 4WD model —

1. Remove transfer case from vehicle. Refer to TF section ("Removal", "REMOVAL AND INSTALLATION").
2. Remove rear oil seal.
3. Install rear oil seal.

- **Apply ATF before installing.**

4. Reinstall any part removed.

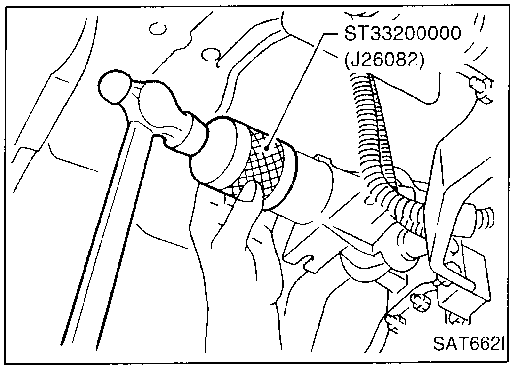

— 2WD model —

1. Remove propeller shaft from vehicle. Refer to PD section ("Removal", "PROPELLER SHAFT").
2. Remove rear oil seal.
3. Install rear oil seal.

- **Apply ATF before installing.**

4. Reinstall any part removed.

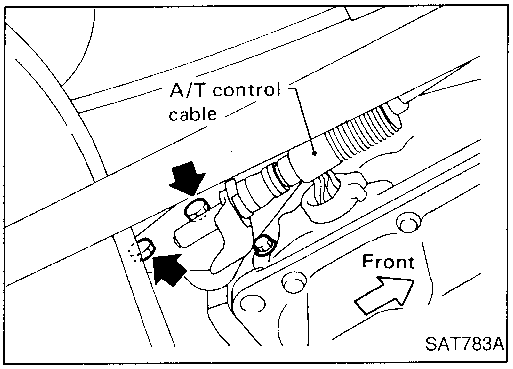

Parking Components Inspection

— 4WD model —

1. Remove propeller shaft. Refer to PD section ("Removal", "PROPELLER SHAFT").
2. Remove transfer case from vehicle. Refer to TF section ("Removal", "REMOVAL AND INSTALLATION").
3. Remove manual control linkage bracket from adapter case.

Parking Components Inspection (Cont'd)

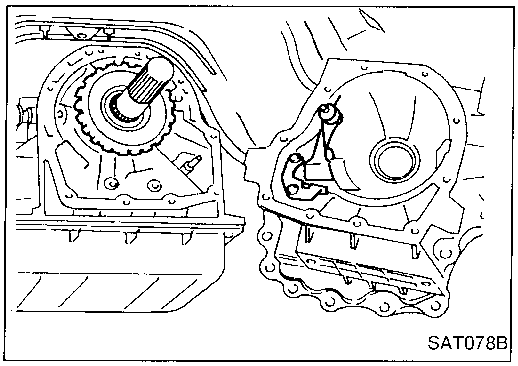

4. Support A/T assembly with a jack.
5. Remove adapter case from transmission case.
6. Replace parking components if necessary.
7. Reinstall any part removed.

- **Always use new sealing parts.**

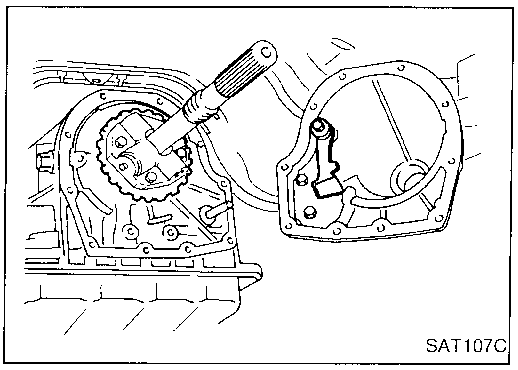

— 2WD model —

1. Remove propeller shaft from vehicle. Refer to PD section ("Removal", "PROPELLER SHAFT").
2. Support A/T assembly with a jack.
3. Remove rear engine mounting member. Tighten rear engine mounting member to the specified torque. Refer to EM section ("ENGINE REMOVAL").
4. Remove rear extension from transmission case.
5. Replace parking components if necessary.
6. Reinstall any part removed.

- **Always use new sealing parts.**

Inhibitor Switch Adjustment

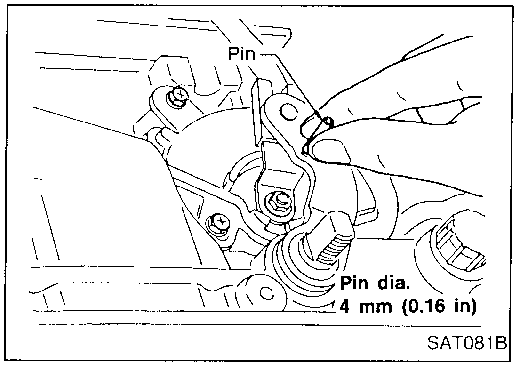

1. Remove manual control linkage from manual shaft of A/T assembly.
2. Set manual shaft of A/T assembly in "N" position.
3. Loosen inhibitor switch fixing bolts.
4. Insert pin into adjustment holes in both inhibitor switch and manual shaft of A/T assembly as near vertical as possible.
5. Reinstall any part removed.
6. Check continuity of inhibitor switch. Refer to "Components Inspection", AT-59.

Manual Control Linkage Adjustment

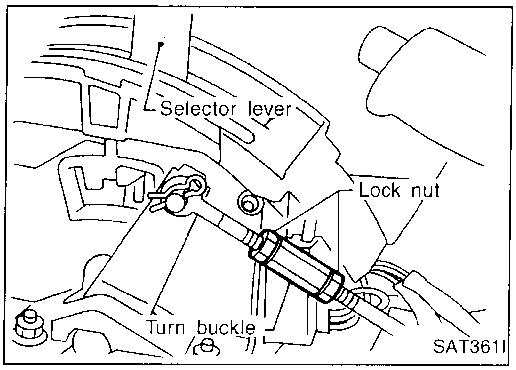

Move selector lever from "P" position to "1" position. You should be able to feel the detents in each position.
If the detents cannot be felt or the pointer indicating the position is improperly aligned, the linkage needs adjustment.

1. Place selector lever in "P" position.
2. Loosen lock nuts.

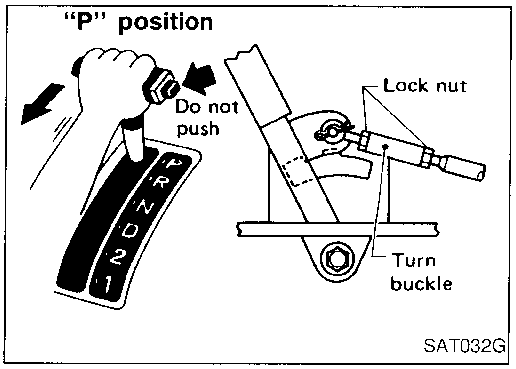

3. Tighten turn buckle until aligns with inner cable, pulling selector lever toward "R" position side without pushing button.
4. Back off turn buckle 1 turn and tighten lock nuts to the specified torque.
   Lock nut
   : 4.4 - 5.9 N·m
   (0.45 - 0.60 kg-m, 39.1 - 52.1 in-lb)
5. Move selector lever from "P" position to "1" position. Make sure that selector lever can move smoothly.

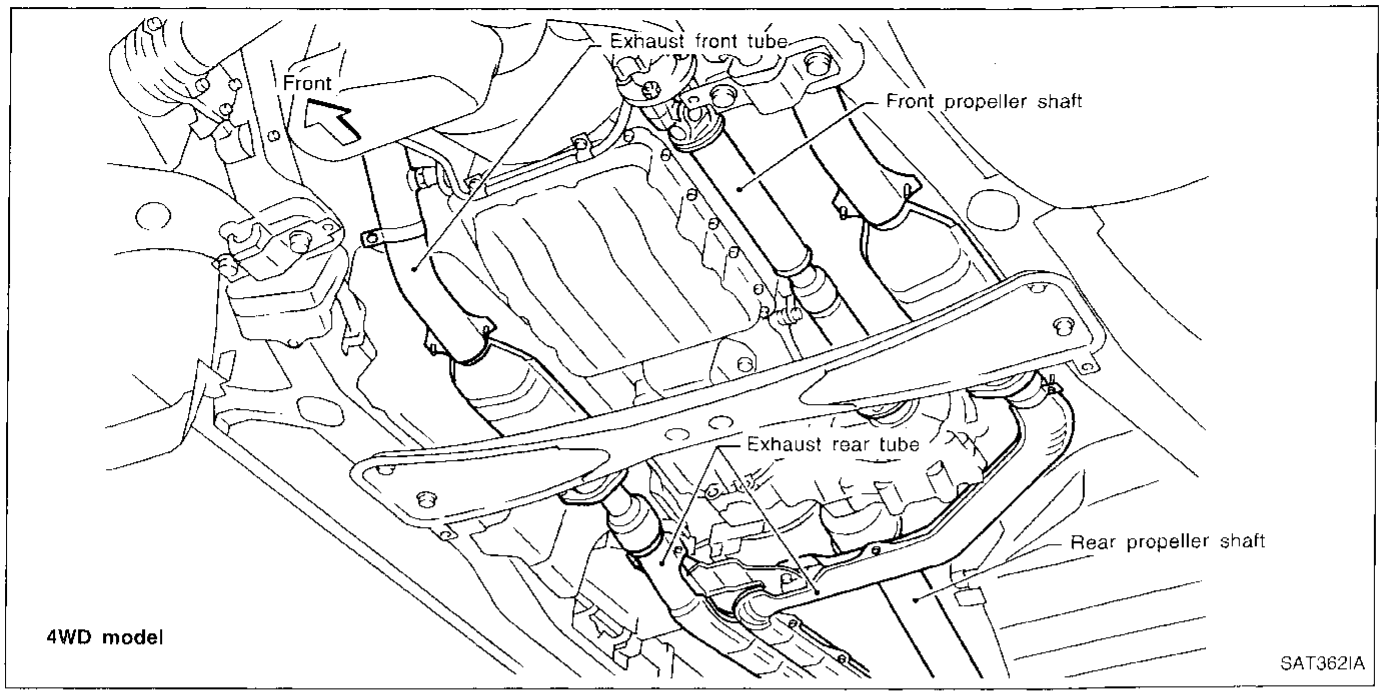

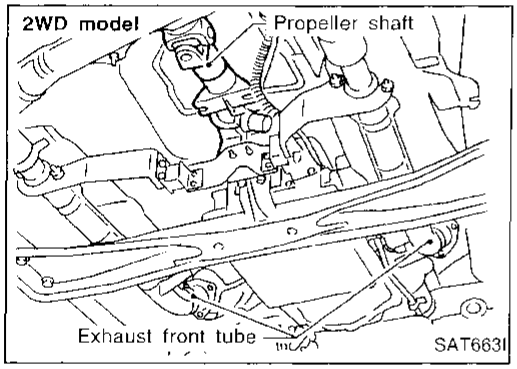

Removal

CAUTION:
When removing the A/T assembly from engine, first remove the crankshaft position sensor (OBD) from the A/T assembly upper side.
Be careful not to damage sensor edge.

— 4WD and 2WD model —

1. Remove battery negative terminal.
2. Remove exhaust front and rear tubes.
3. Remove fluid charging pipe from A/T assembly.
4. Remove oil cooler pipe from A/T assembly.
5. Plug up openings such as the fluid charging pipe hole, etc.
6. Remove propeller shaft. Refer to PD section ("Removal", "PROPELLER SHAFT").
7. Remove transfer control linkage from transfer. Refer to TF section ("Removal" — "REMOVAL AND INSTALLATION").

- **Insert plug into rear oil seal after removing rear propeller shaft.**
- **Be careful not to damage spline, sleeve yoke and rear oil seal.**

8. Remove A/T control cable from A/T assembly.
9. Disconnect A/T and speedometer sensor harness connectors.

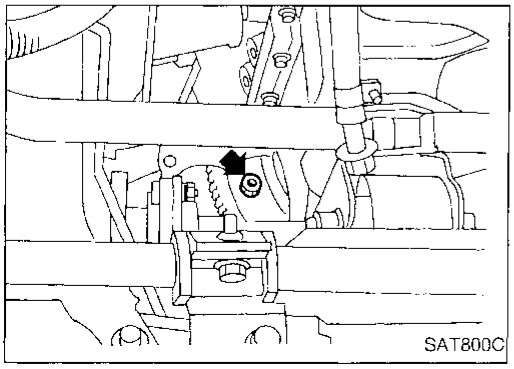

10. Remove starter motor.
    Tightening torque
    : 41 - 52 N·m (4.2 - 5.3 kg-m, 30 - 38 ft-lb)
11. Remove gusset and rear plate cover securing engine to A/T assembly.
12. Remove bolts securing torque converter to drive plate.

- **Remove the bolts by turning crankshaft.**

Removal (Cont'd)

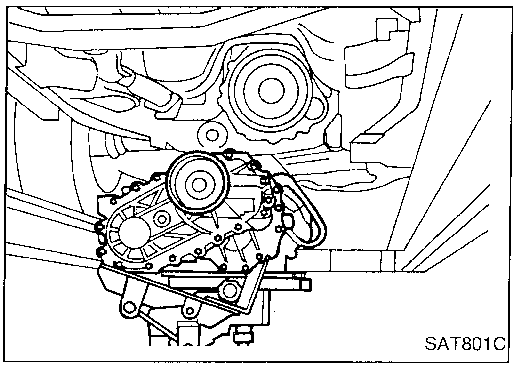

— 4WD model —

13. Support A/T and transfer assembly with a jack.
14. Remove rear engine mounting member from body and A/T assembly. Tighten rear engine mounting member to the specified torque. Refer to EM section ("ENGINE REMOVAL").
15. Remove bolts securing A/T assembly to engine.
16. Lower A/T assembly with transfer.

— 2WD model —

13. Support A/T assembly with a jack.
14. Remove rear engine mounting member from body and A/T assembly. Tighten rear engine mounting member to the specified torque. Refer to EM section ("ENGINE REMOVAL").
15. Remove bolts securing A/T assembly to engine.
16. Pull A/T assembly backwards.
    - **Secure torque converter to prevent it from dropping.**
    - **Secure A/T assembly to a jack.**
17. Lower A/T assembly.

Installation

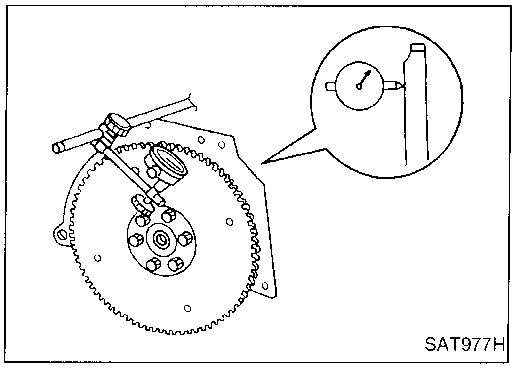

- Drive plate runout
  Maximum allowable runout:
  0.5 mm (0.020 in)
  If this runout is out of specification, replace drive plate with ring gear.

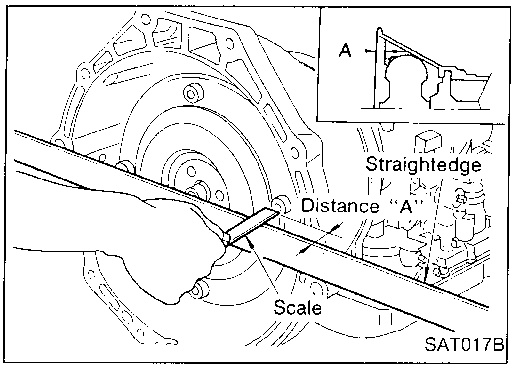

- When connecting torque converter to transmission, measure distance "A" to be certain that they are correctly assembled.
  Distance "A":
  26.0 mm (1.024 in) or more

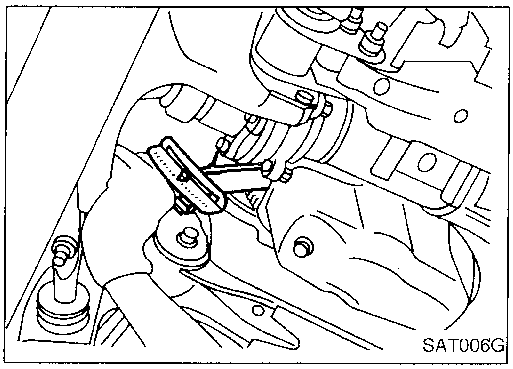

- Install converter to drive plate.
- **After converter is installed to drive plate, rotate crankshaft several turns and check to be sure that transmission rotates freely without binding.**

Installation (Cont'd)

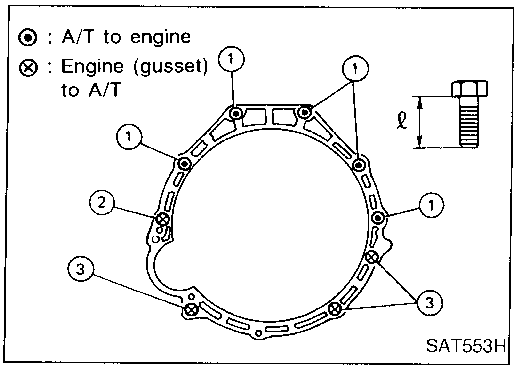

- Tighten bolts securing transmission.

Bolt No.	Tightening torque N·m (kg-m, ft-lb)	Bolt length "ℓ" mm (in)
①	39 - 49 (4.0 - 5.0, 29 - 36)	47.5 (1.870)
②	39 - 49 (4.0 - 5.0, 29 - 36)	58.0 (2.283)
③	29 - 39 (3.0 - 4.0, 22 - 29)	25.0 (0.984)
Gusset to engine	29 - 39 (3.0 - 4.0, 22 - 29)	20.0 (0.787)

- Reinstall any part removed.

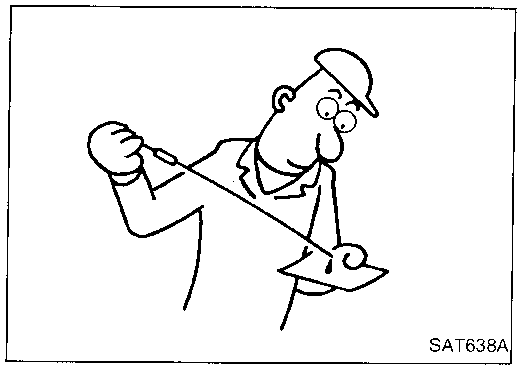

- Check fluid level in transmission.
- Move selector lever through all positions to be sure that transmission operates correctly.
  With parking brake applied, rotate engine at idling. Move selector lever through "N" to "D", to "2", to "1" and to "R" positions. A slight shock should be felt by hand gripping selector each time transmission is shifted.
- Perform road test. Refer to "ROAD TEST", AT-35.

SEC. 311•313•315

: N•m (kg-m, ft-lb)
: Apply recommended sealant (Nissan genuine part: KP610-00250) or equivalent.
ATF : Apply ATF.
P : Apply petroleum jelly.
★ : Select with proper thickness.

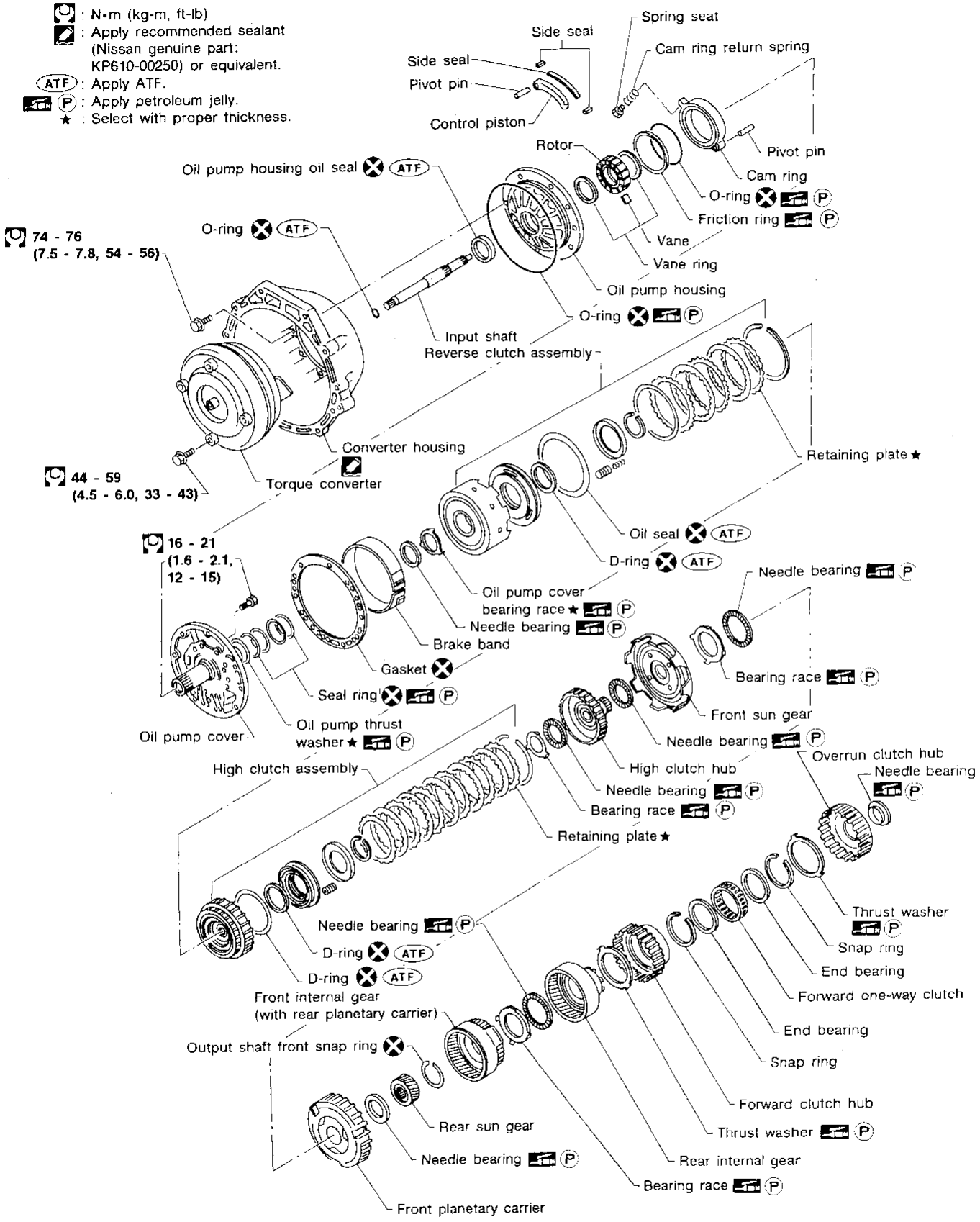

SAT680HA

SEC. 311•315•317

: N•m (kg-m, in-lb)
: N•m (kg-m, ft-lb)
ATF : Apply ATF.
P : Apply petroleum jelly.
★ : Select with proper thickness.
☆ : Adjustment is required.

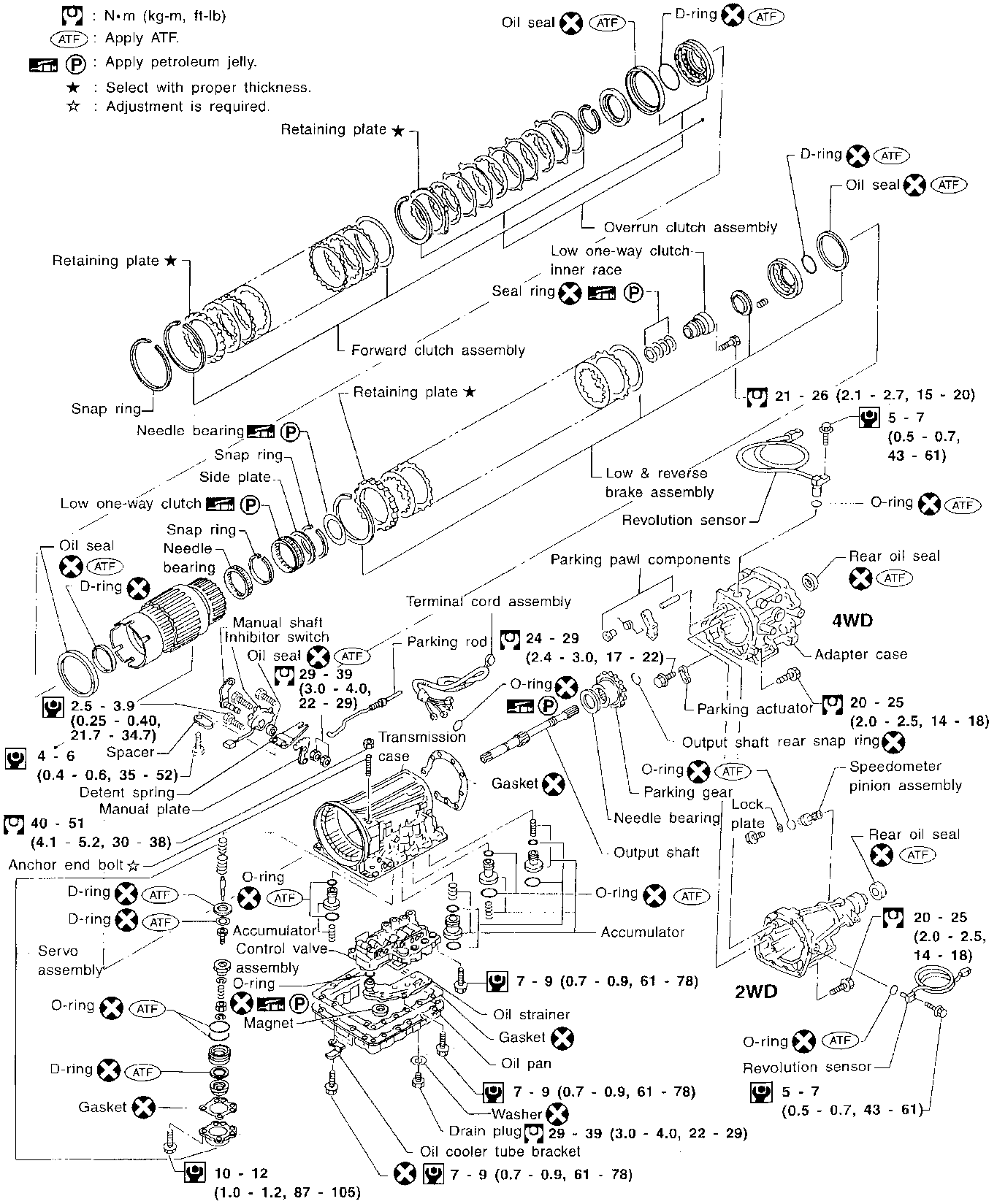

SAT381IA

Oil Channel

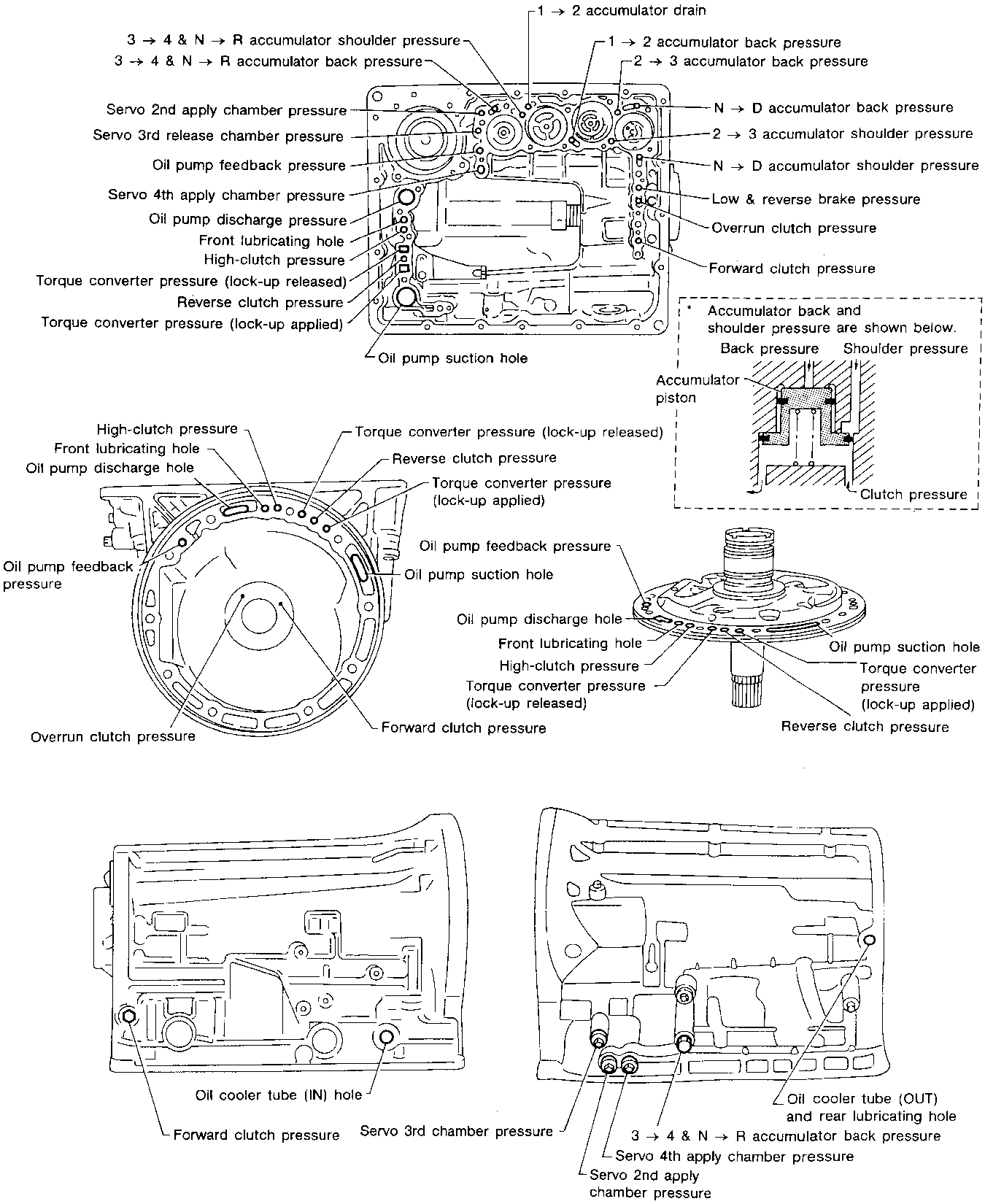
1 → 2 accumulator drain
3 → 4 & N → R accumulator shoulder pressure
3 → 4 & N → R accumulator back pressure
1 → 2 accumulator back pressure
2 → 3 accumulator back pressure
Servo 2nd apply chamber pressure
Servo 3rd release chamber pressure
Oil pump feedback pressure
Servo 4th apply chamber pressure
Oil pump discharge pressure
Front lubricating hole
High-clutch pressure
Torque converter pressure (lock-up released)
Reverse clutch pressure
Torque converter pressure (lock-up applied)
Oil pump suction hole
N → D accumulator back pressure
2 → 3 accumulator shoulder pressure
N → D accumulator shoulder pressure
Low & reverse brake pressure
Overrun clutch pressure
Forward clutch pressure
* Accumulator back and shoulder pressure are shown below.
Back pressure
Shoulder pressure
Accumulator piston
Clutch pressure
High-clutch pressure
Front lubricating hole
Oil pump discharge hole
Torque converter pressure (lock-up released)
Reverse clutch pressure
Torque converter pressure (lock-up applied)
Oil pump feedback pressure
Oil pump suction hole
Overrun clutch pressure
Forward clutch pressure
Oil pump feedback pressure
Oil pump discharge hole
Front lubricating hole
High-clutch pressure
Torque converter pressure (lock-up released)
Oil pump suction hole
Torque converter pressure (lock-up applied)
Reverse clutch pressure
Oil cooler tube (IN) hole
Forward clutch pressure
Servo 3rd chamber pressure
Oil cooler tube (OUT) and rear lubricating hole
3 → 4 & N → R accumulator back pressure
Servo 4th apply chamber pressure
Servo 2nd apply chamber pressure
SAT185B

Locations of Needle Bearings, Thrust Washers and Snap Rings

Outer diameter of snap rings

Item number	Outer diameter mm (in)
2	161.0 (6.34)
3	140.1 (5.52)
4	156.4 (6.16)
6	142.0 (5.59)
7	159.2 (6.27)

Thrust washers

Item number	Color
1	Black
5	White

Outer diameter of needle bearings

Item number	Outer diameter mm (in)
8	47 (1.85)
9	53 (2.09)
10	53 (2.09)
11	78 (3.07)
12	53 (2.09)
13	78 (3.07)
14	57 (2.24)
15	78.1 (3.075)
16	64 (2.52)

Inner diameter of bearing races

Item number	Outer diameter mm (in)
11	58 (2.28)
13	58.8 (2.315)

Installation of one-piece bearings

Item number	Bearing race (black) location
12	Front
15	Rear side
16	Rear side

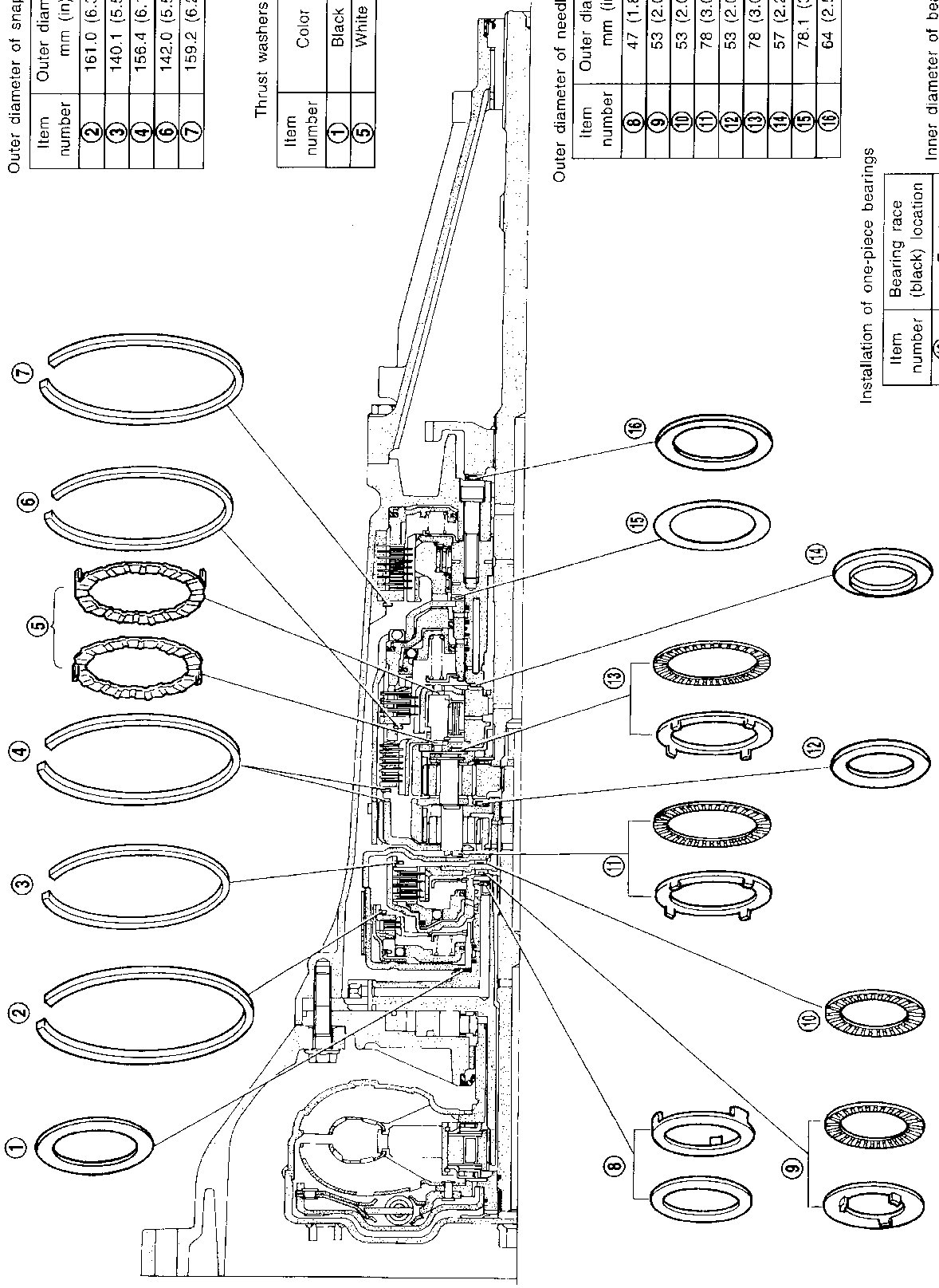

SAT380IA

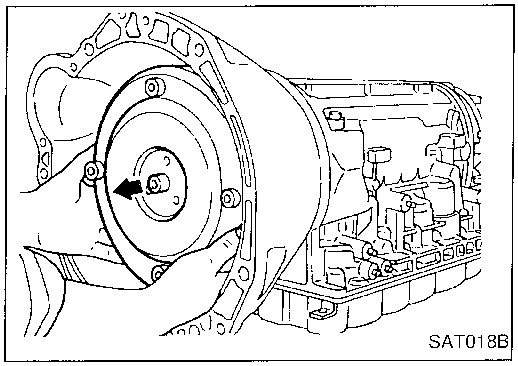

Disassembly

1. Drain ATF through drain plug.
2. Remove torque converter by holding it firmly and turning while pulling straight out.

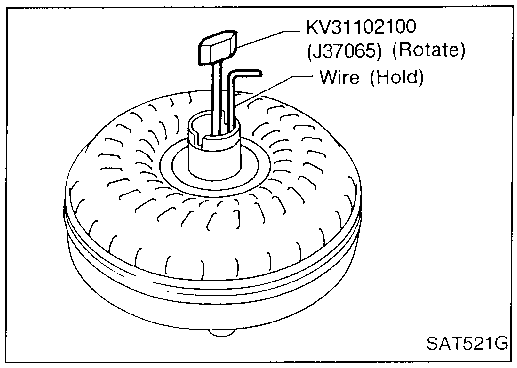

3. Check torque converter one-way clutch.
a. Insert Tool into spline of one-way clutch inner race.
b. Hook bearing support unitized with one-way clutch outer race with suitable wire.
c. Check that one-way clutch inner race rotates only clockwise with Tool while holding bearing support with wire.

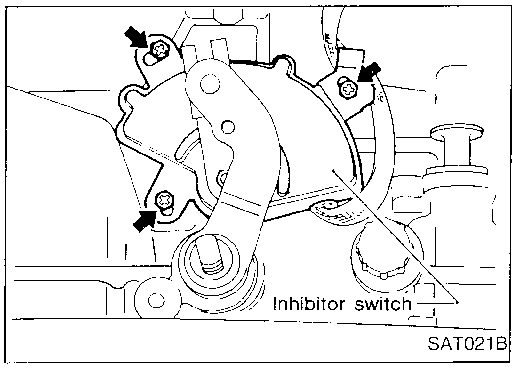

4. Remove inhibitor switch from transmission case.

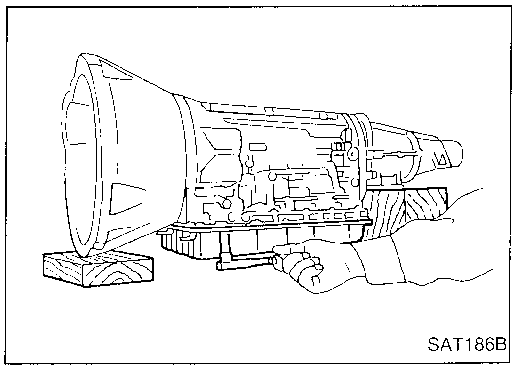

5. Remove oil pan.
- **Always place oil pan straight down so that foreign particles inside will not move.**

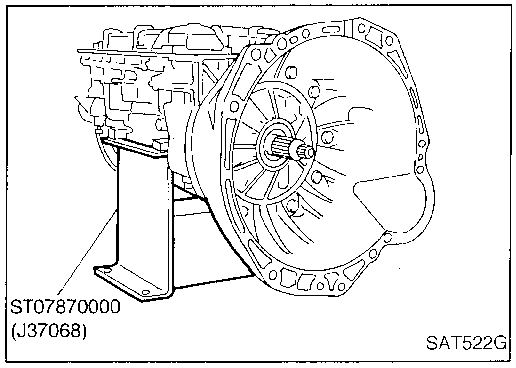

6. Place transmission into Tool with the control valve facing up.

Disassembly (Cont'd)

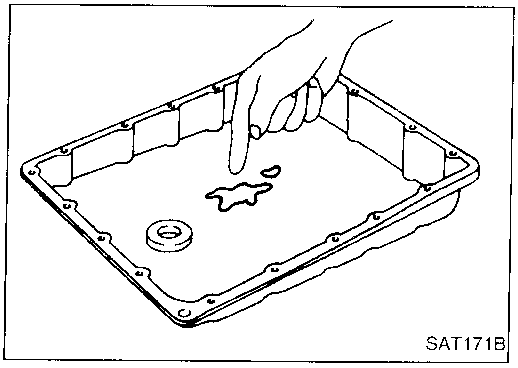

7. Check foreign materials in oil pan to help determine cause of malfunction. If the fluid is very dark, smells burned, or contains foreign particles, the frictional material (clutches, band) may need replacement. A tacky film that will not wipe clean indicates varnish build up. Varnish can cause valves, servo, and clutches to stick and may inhibit pump pressure.

- **If frictional material is detected, replace radiator after repair of A/T. Refer to LC section ("Radiator", "ENGINE COOLING SYSTEM").**

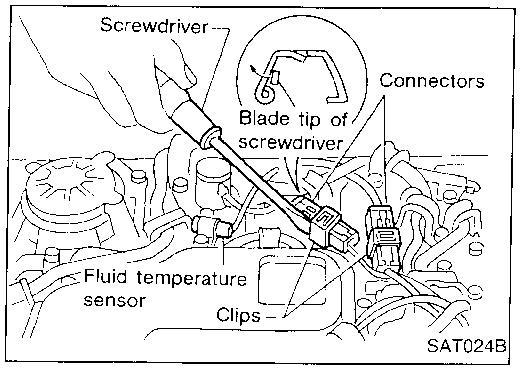

8. Remove torque converter clutch solenoid valve and fluid temperature sensor connectors.

- **Be careful not to damage connector.**

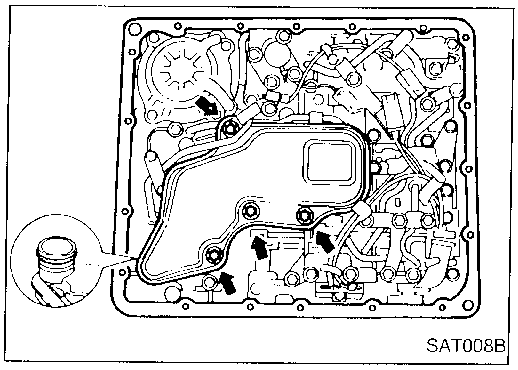

9. Remove oil strainer.
a. Remove oil strainer from control valve assembly. Then remove O-ring from oil strainer.

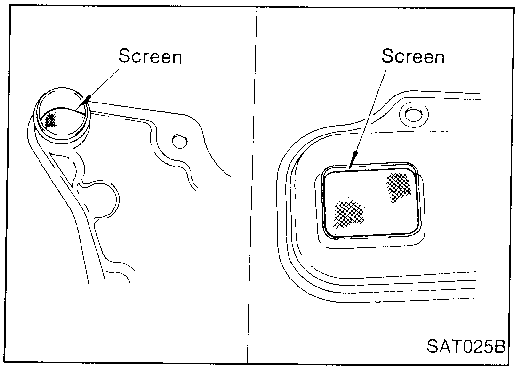

b. Check oil strainer screen for damage.

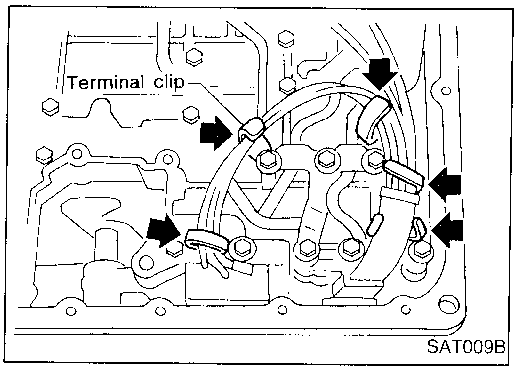

10. Remove control valve assembly.
a. Straighten terminal clips to free terminal cords then remove terminal clips.

Disassembly (Cont'd)

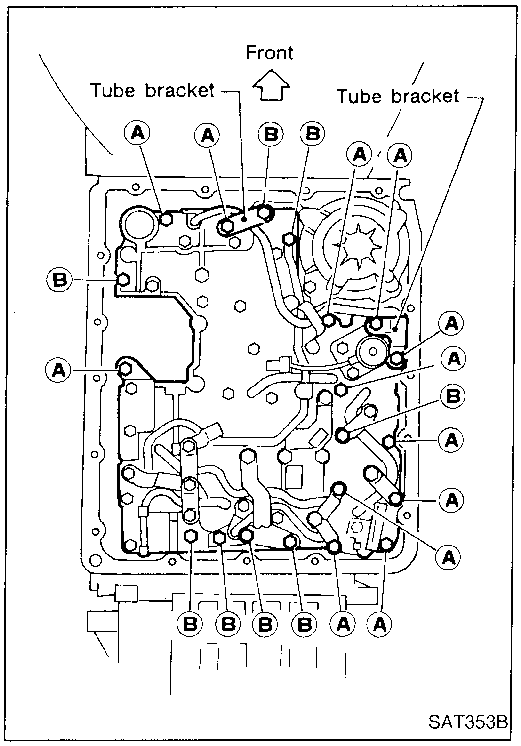

b. Remove bolts Ⓐ and Ⓑ, and remove control valve assembly from transmission.

Bolt symbol	Length mm (in)
Ⓐ	33 (1.30)
Ⓑ	45 (1.77)

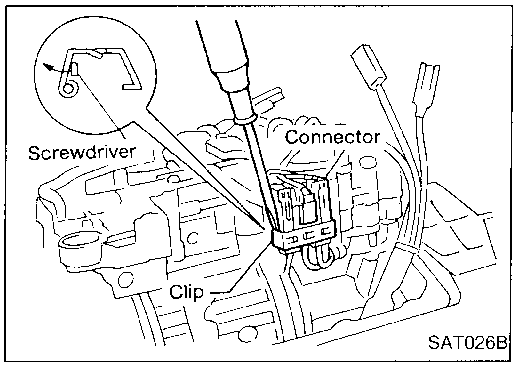

c. Remove solenoid connector.

- **Be careful not to damage connector.**

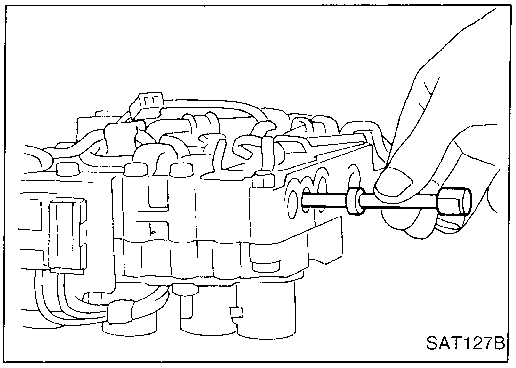

d. Remove manual valve from control valve assembly.

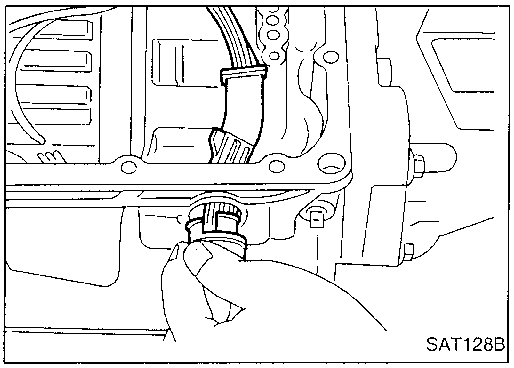

11. Remove terminal cord assembly from transmission case while pushing on stopper.

- **Be careful not to damage cord.**
- **Do not remove terminal cord assembly unless it is damaged.**

Disassembly (Cont'd)

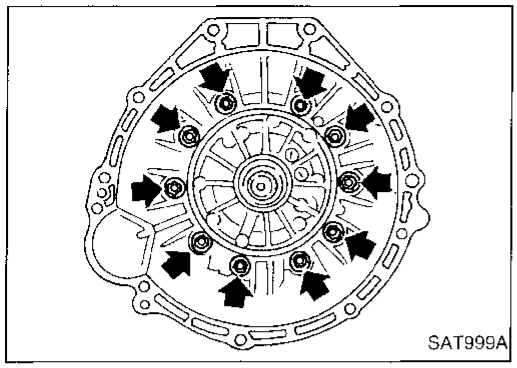

12. Remove converter housing from transmission case.
- **Be careful not to scratch converter housing.**

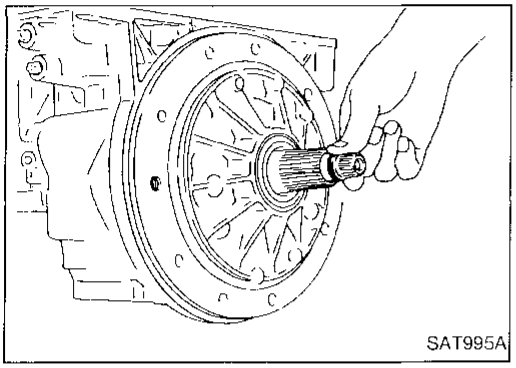

13. Remove O-ring from input shaft.

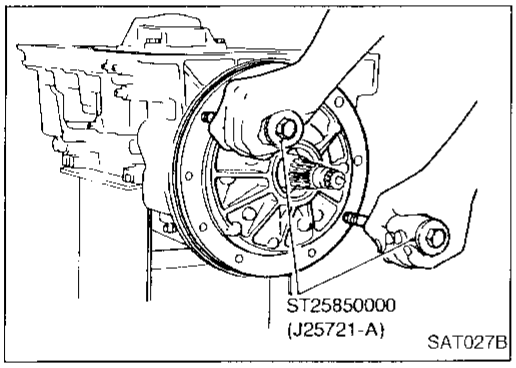

14. Remove oil pump assembly.
a. Attach Tool to oil pump assembly and extract it evenly from transmission case.

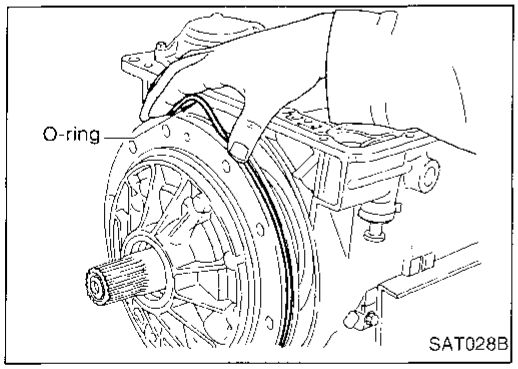

b. Remove O-ring from oil pump assembly.
c. Remove traces of sealant from oil pump housing.
- **Be careful not to scratch pump housing.**

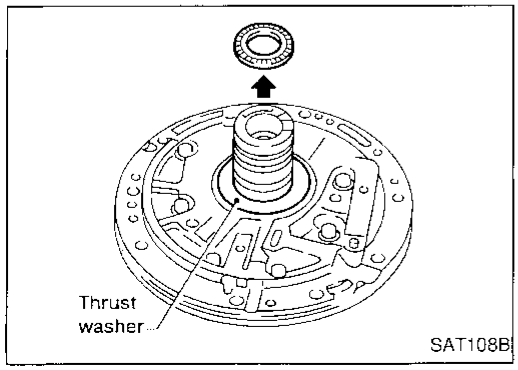

d. Remove needle bearing and thrust washer from oil pump assembly.

Disassembly (Cont'd)

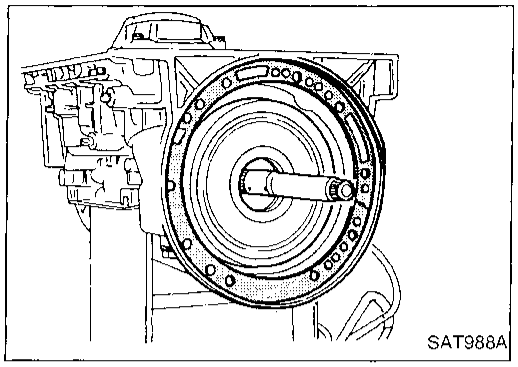

15. Remove input shaft and oil pump gasket.

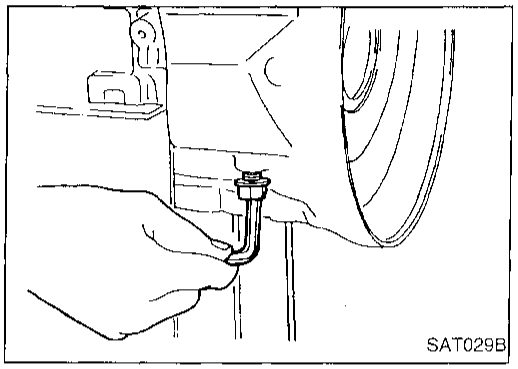

16. Remove brake band and band strut.
a. Loosen lock nut and remove band servo anchor end pin from transmission case.

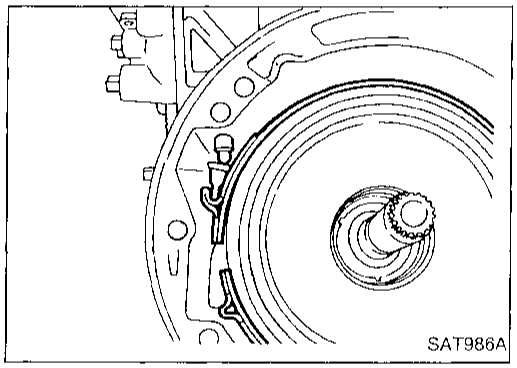

b. Remove brake band and band strut from transmission case.

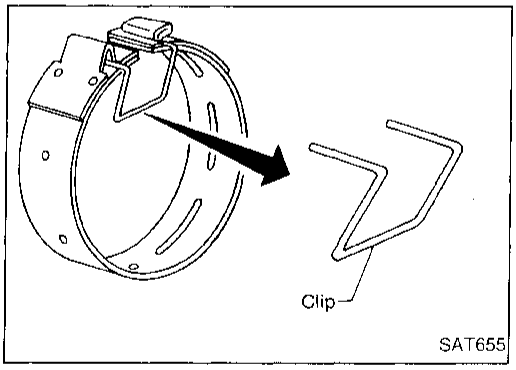

c. Hold brake band in a circular shape with clip.

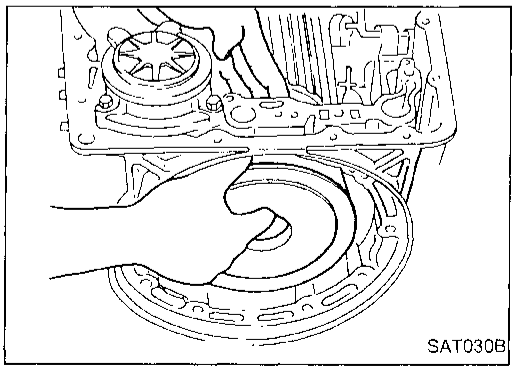

17. Remove front side clutch and gear components.
a. Remove clutch pack (reverse clutch, high clutch and front sun gear) from transmission case.

Disassembly (Cont'd)

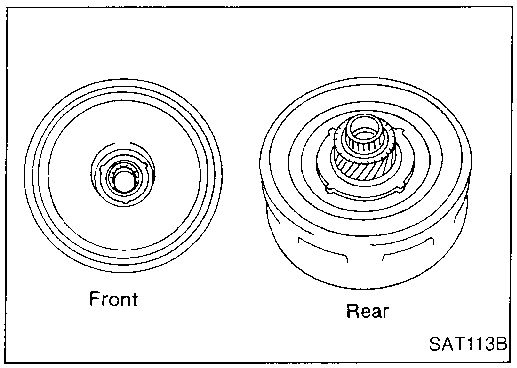

b. Remove front bearing race from clutch pack.
c. Remove rear bearing race from clutch pack.

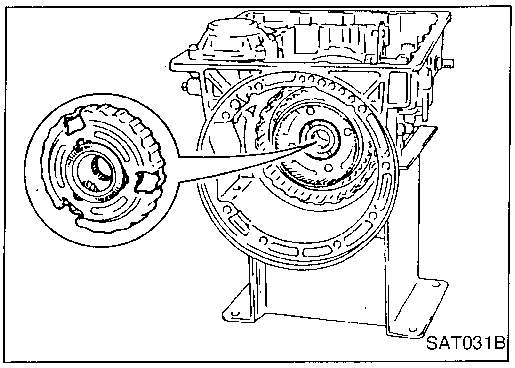

d. Remove front planetary carrier from transmission case.

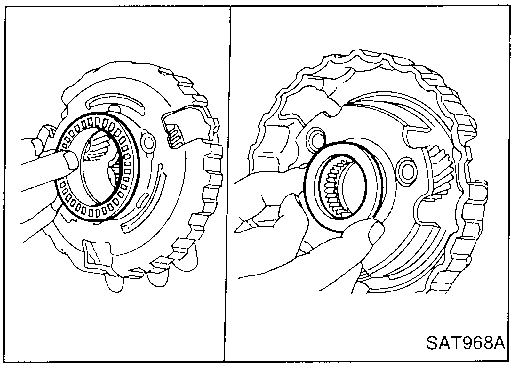

e. Remove front needle bearing from front planetary carrier.
f. Remove rear bearing from front planetary carrier.

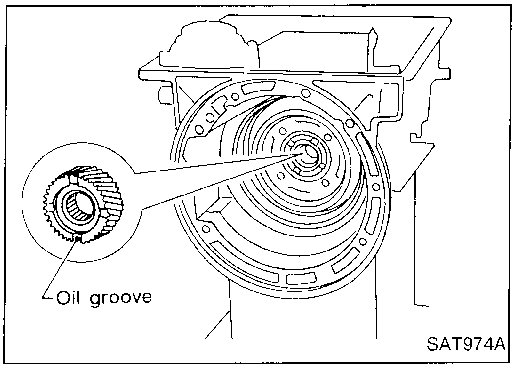

g. Remove rear sun gear from transmission case.

Disassembly (Cont'd)

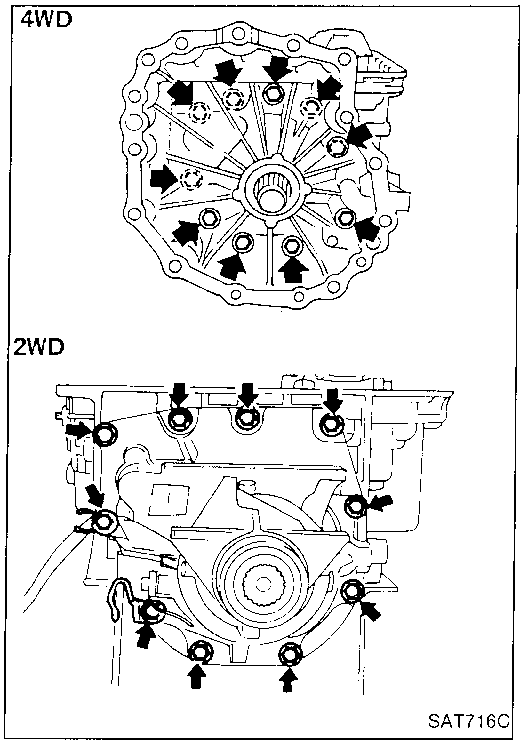

18. Remove rear extension or adapter case.
a. Remove rear extension or adapter case from transmission case.
b. Remove rear extension or adapter case gasket from transmission case.

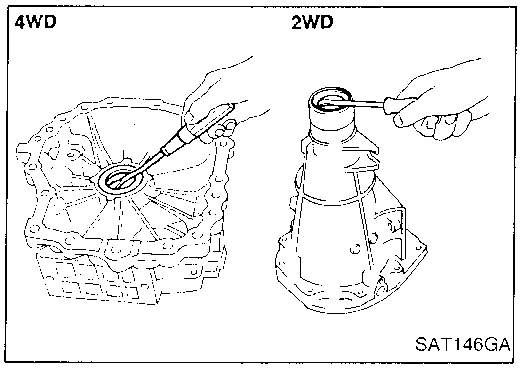

c. Remove oil seal from rear extension or adapter case.
- **Do not remove oil seal unless it is to be replaced.**

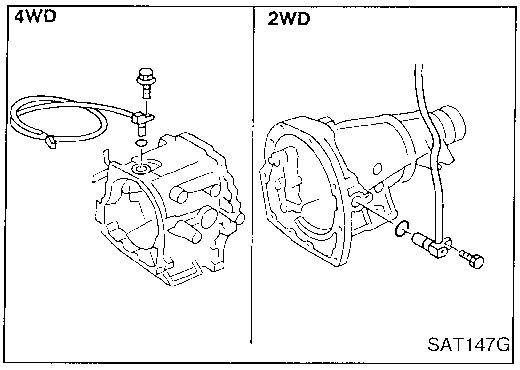

d. Remove revolution sensor from rear extension or adapter case.
e. Remove O-ring from revolution sensor.

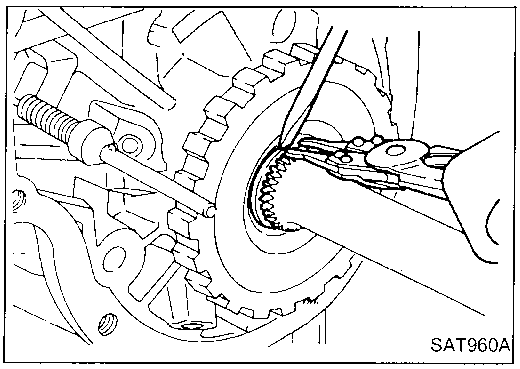

19. Remove output shaft and parking gear.
a. Remove rear snap ring from output shaft.

Disassembly (Cont'd)

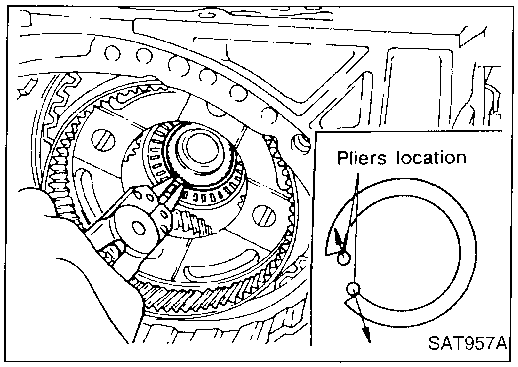

b. Slowly push output shaft all the way forward.
- **Do not use excessive force.**

c. Remove snap ring from output shaft.

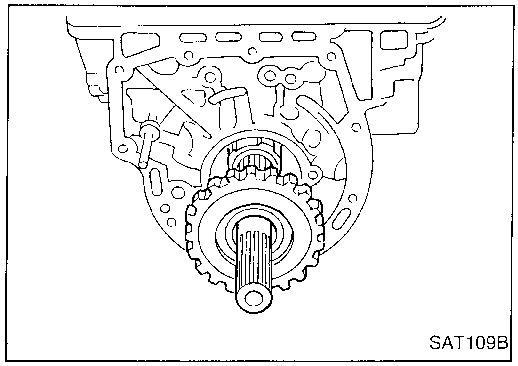

d. Remove output shaft and parking gear as a unit from transmission case.
e. Remove parking gear from output shaft.

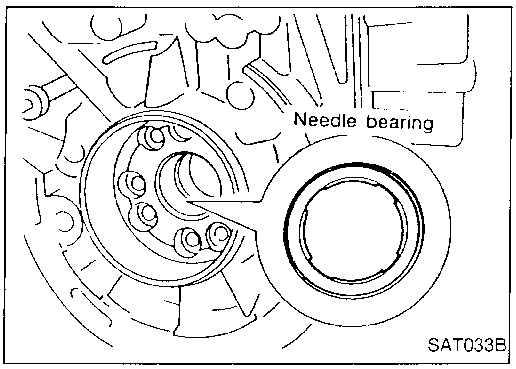

f. Remove needle bearing from transmission case.

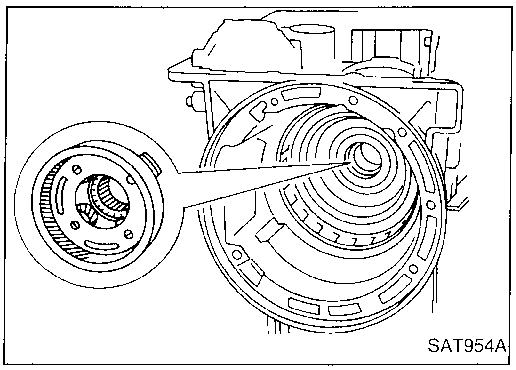

20. Remove rear side clutch and gear components.
a. Remove front internal gear.

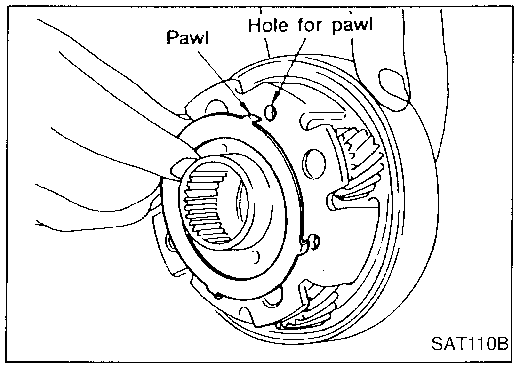

b. Remove bearing race from front internal gear.

Disassembly (Cont'd)

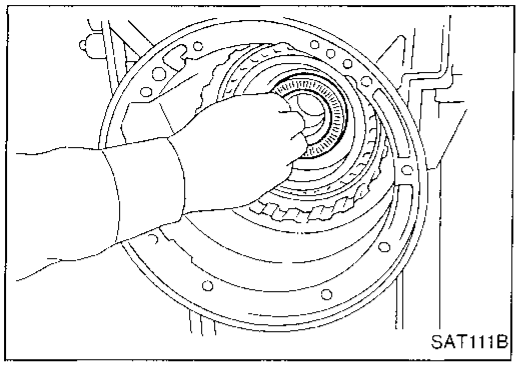

c. Remove needle bearing from rear internal gear.

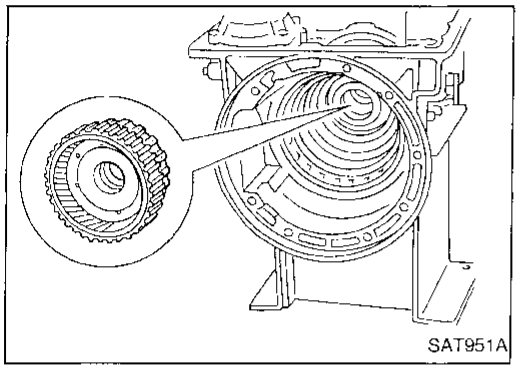

d. Remove rear internal gear, forward clutch hub and overrun clutch hub as a set from transmission case.

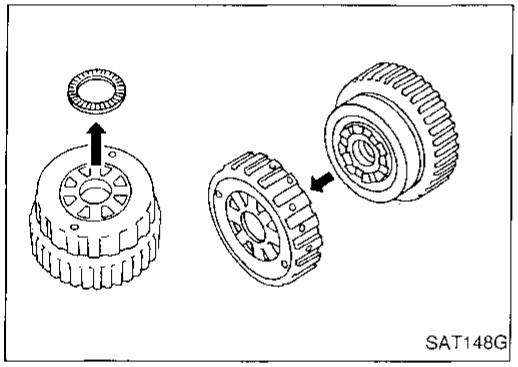

e. Remove needle bearing from overrun clutch hub.
f. Remove overrun clutch hub from rear internal gear and forward clutch hub.

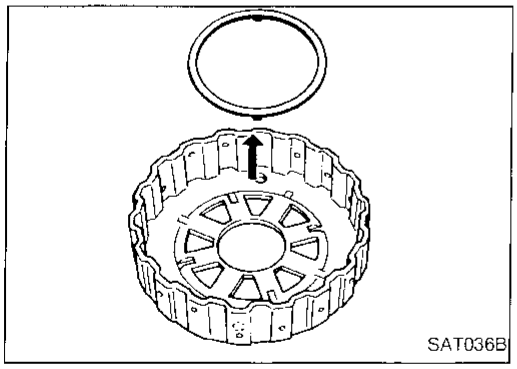

g. Remove thrust washer from overrun clutch hub.

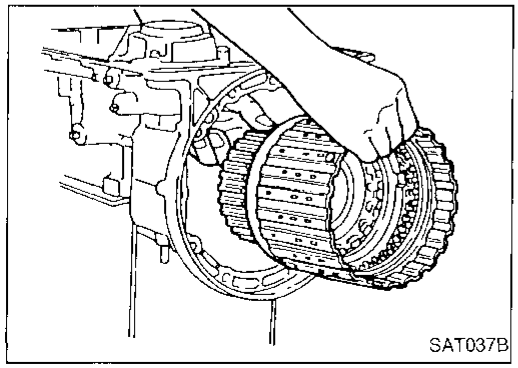

h. Remove forward clutch assembly from transmission case.

Disassembly (Cont'd)

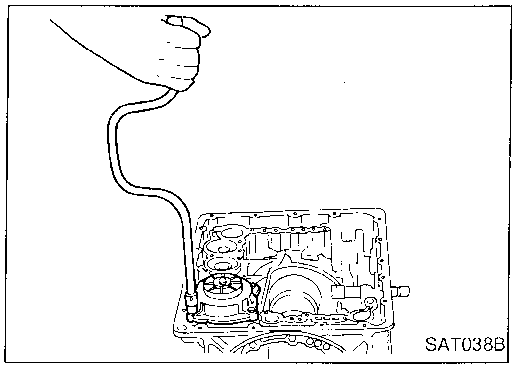

21. Remove band servo and accumulator components.
a. Remove band servo retainer from transmission case.

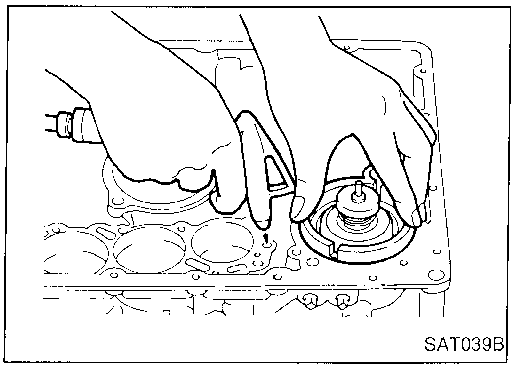

b. Apply compressed air to oil hole until band servo piston comes out of transmission case.
- **Hold piston with a rag and gradually direct air to oil hole.**

c. Remove return springs.

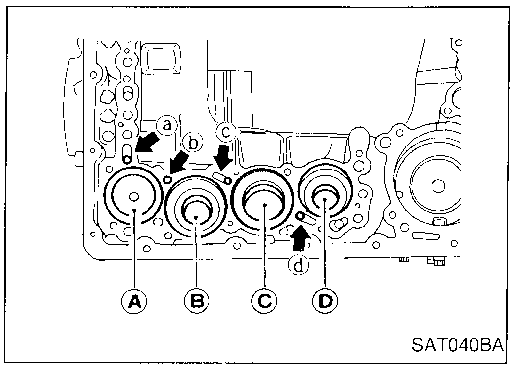

d. Remove springs from accumulator pistons Ⓑ, Ⓒ and Ⓓ.
e. Apply compressed air to each oil hole until piston comes out.
- **Hold piston with a rag and gradually direct air to oil hole.**

Identification of accumulator pistons	Ⓐ	Ⓑ	Ⓒ	Ⓓ
Identification of oil holes	ⓐ	ⓑ	ⓒ	ⓓ

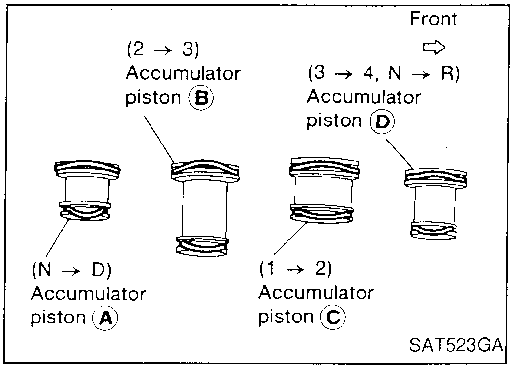

f. Remove O-ring from each piston.

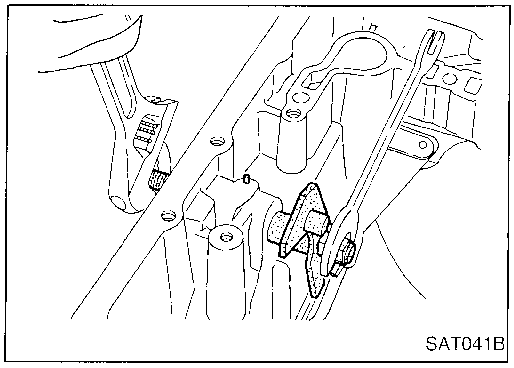

22. Remove manual shaft components, if necessary.
a. Hold width across flats of manual shaft (outside the transmission case) and remove lock nut from shaft.

Disassembly (Cont'd)

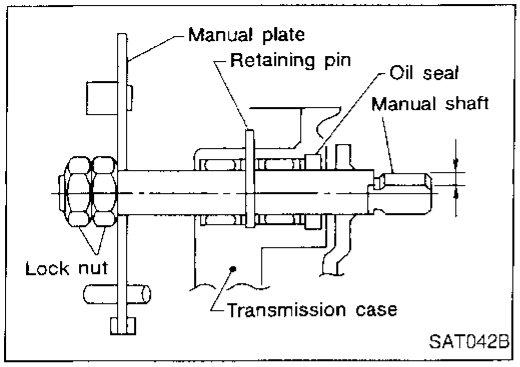

b. Remove retaining pin from transmission case.

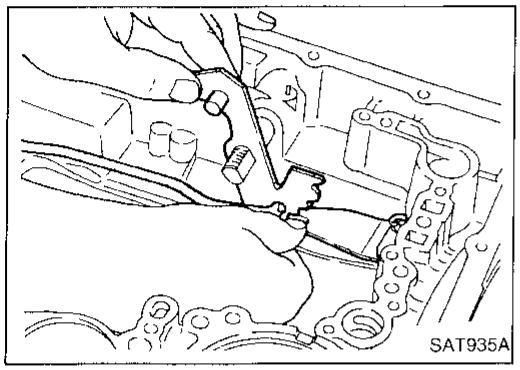

c. While pushing detent spring down, remove manual plate and parking rod from transmission case.

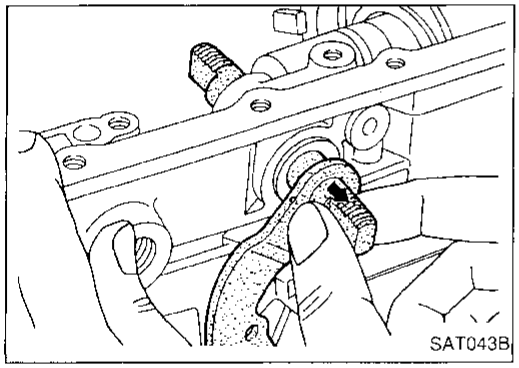

d. Remove manual shaft from transmission case.

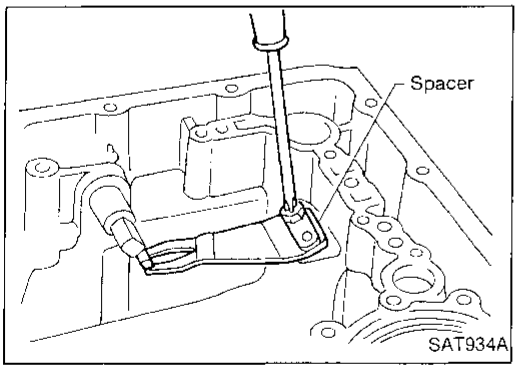

e. Remove spacer and detent spring from transmission case.

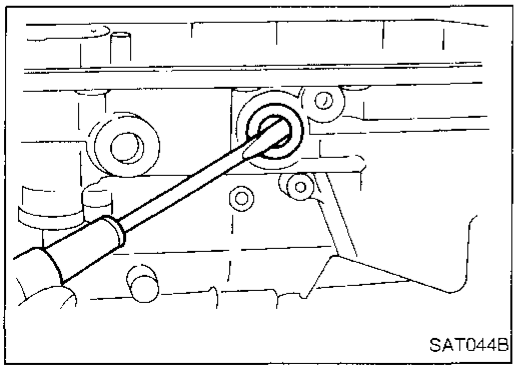

f. Remove oil seal from transmission case.

Oil Pump

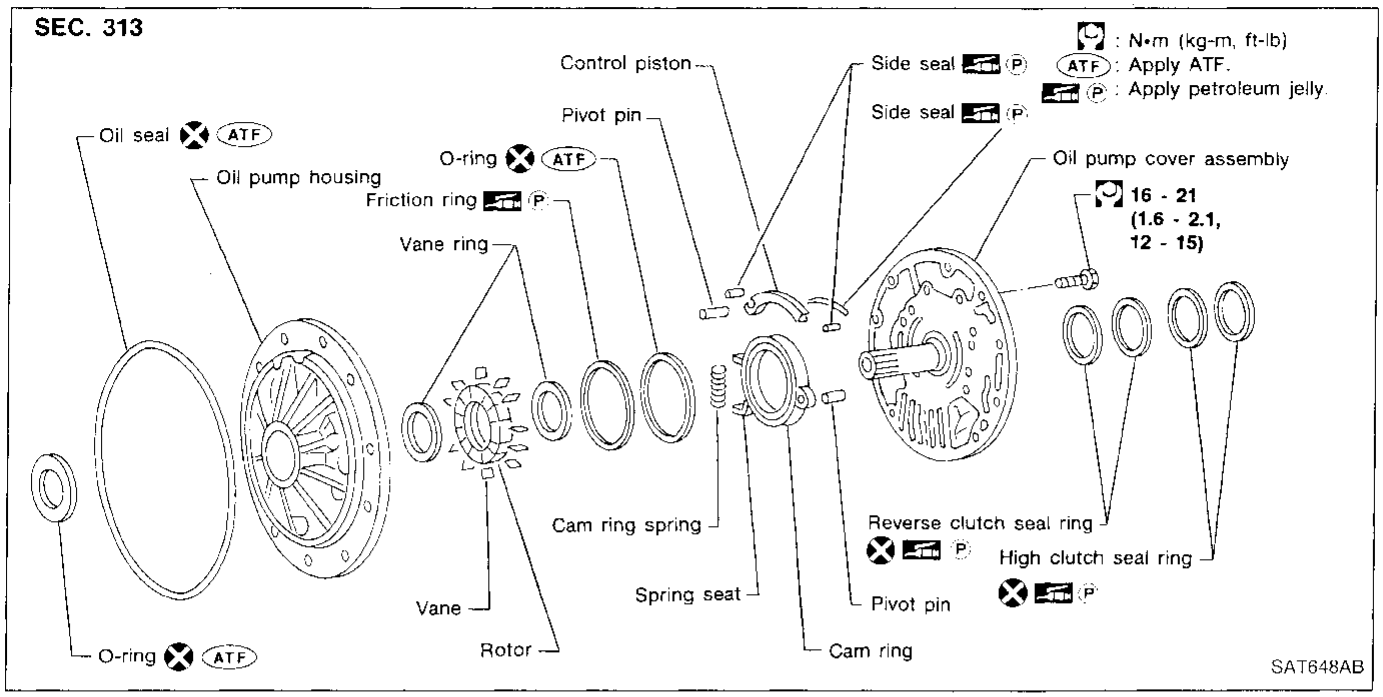

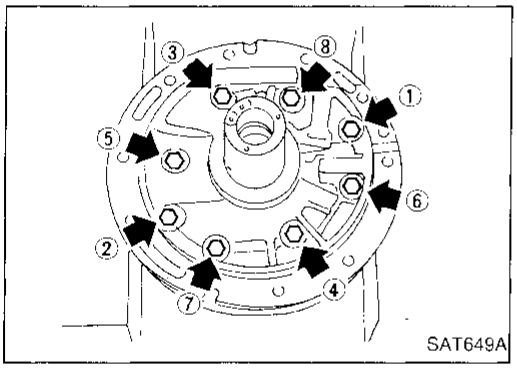

DISASSEMBLY

1. Loosen bolts in numerical order and remove oil pump cover.

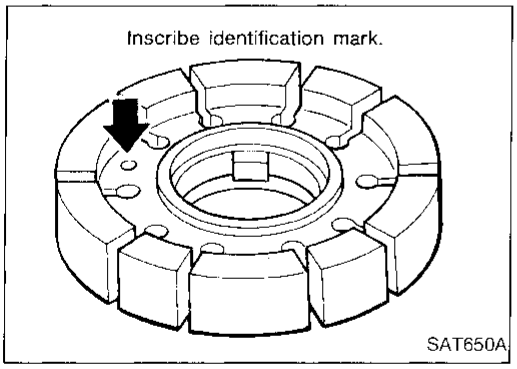

2. Remove rotor, vane rings and vanes.
- **Inscribe a mark on back of rotor for identification of fore-aft direction when reassembling rotor. Then remove rotor.**

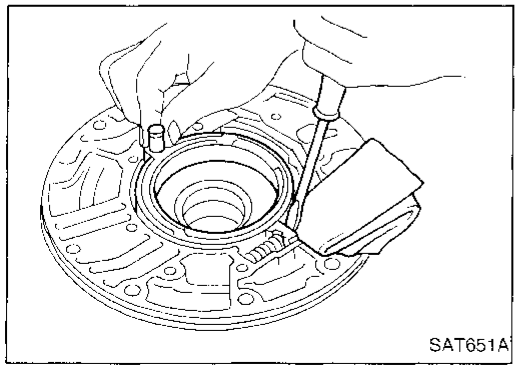

3. While pushing on cam ring remove pivot pin.
- **Be careful not to scratch oil pump housing.**

Oil Pump (Cont'd)

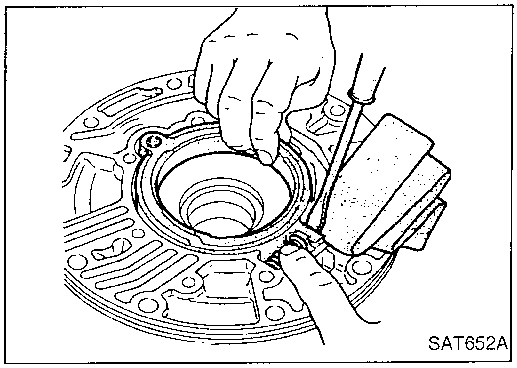
SAT652A

4. While holding cam ring and spring lift out cam ring spring.
- **Be careful not to damage oil pump housing.**
- **Hold cam ring spring to prevent it from jumping.**

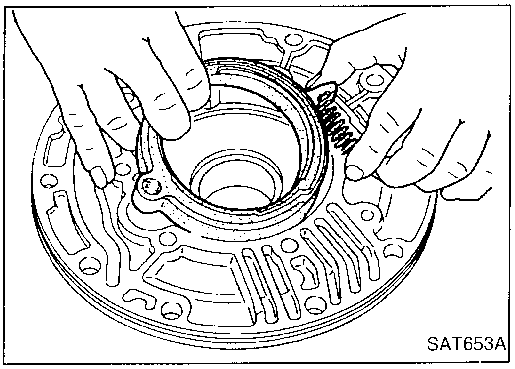
SAT653A

5. Remove cam ring and cam ring spring from oil pump housing.

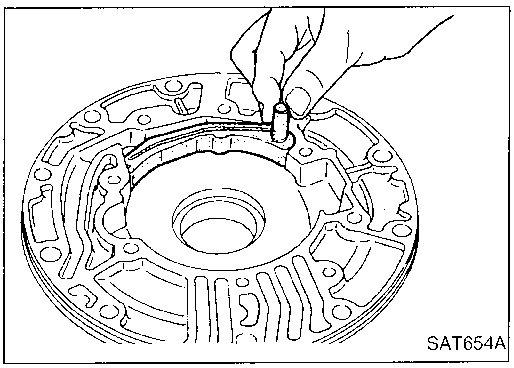
SAT654A

6. Remove pivot pin from control piston and remove control piston assembly.

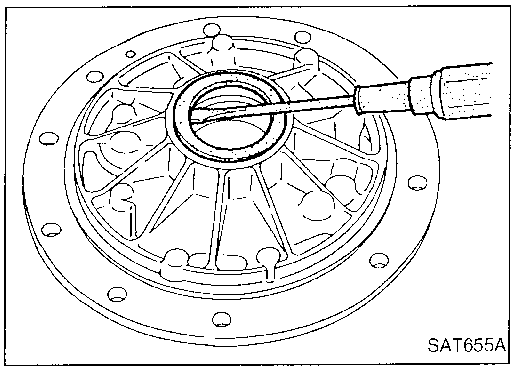
SAT655A

7. Remove oil seal from oil pump housing.
- **Be careful not to scratch oil pump housing.**

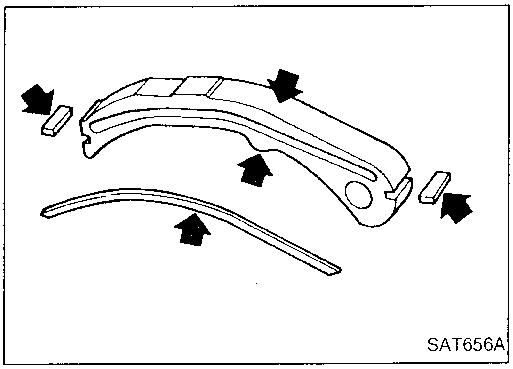
SAT656A

INSPECTION

Oil pump cover, rotor, vanes, control piston, side seals, cam ring and friction ring

- Check for wear or damage.

Oil Pump (Cont'd)

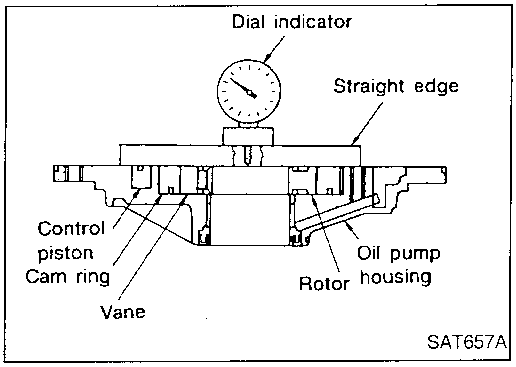

Side clearances

- Measure side clearances between end of oil pump housing and cam ring, rotor, vanes and control piston. Measure in at least four places along their circumferences. Maximum measured values should be within specified positions.
- **Before measurement, check that friction rings, O-ring, control piston side seals and cam ring spring are removed.**
  Standard clearance (Cam ring, rotor, vanes and control piston):
  Refer to SDS, AT-217.
- If not within standard clearance, replace oil pump assembly except oil pump cover assembly.

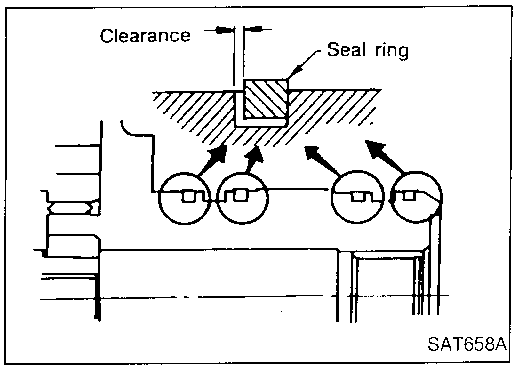

Seal ring clearance

- Measure clearance between seal ring and ring groove.
  Standard clearance:
  0.10 - 0.25 mm (0.0039 - 0.0098 in)
  Wear limit:
  0.25 mm (0.0098 in)
- If not within wear limit, replace oil pump cover assembly.

ASSEMBLY

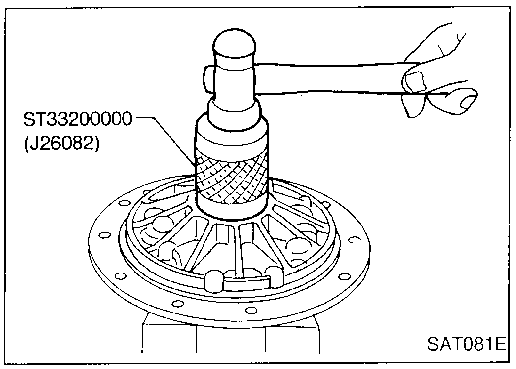

1. Drive oil seal into oil pump housing.
- **Apply ATF to outer periphery and lip surface.**

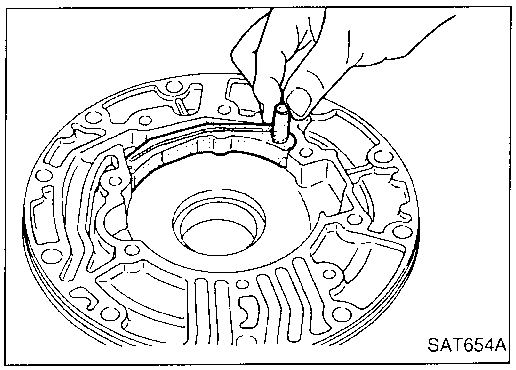

2. Install cam ring in oil pump housing by the following steps.

a. Install side seal on control piston.
- **Pay attention to its direction — Black surface goes toward control piston.**
- **Apply petroleum jelly to side seal.**

b. Install control piston on oil pump.

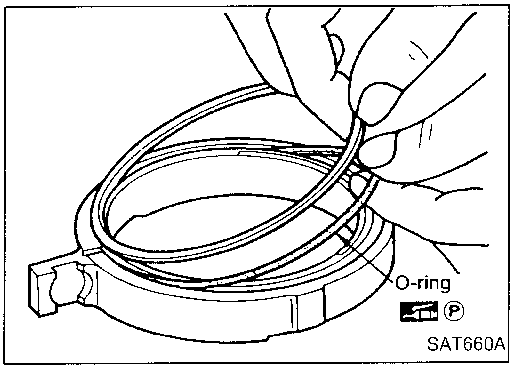

c. Install O-ring and friction ring on cam ring.
- **Apply petroleum jelly to O-ring.**

Oil Pump (Cont'd)

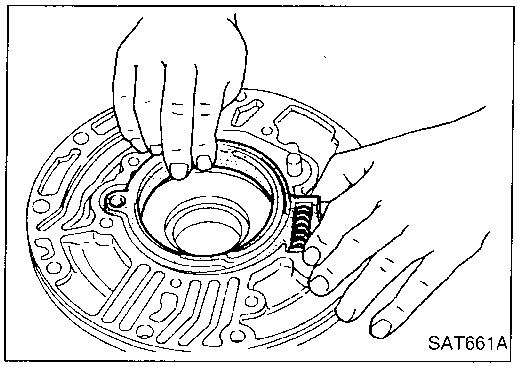

d. Assemble cam ring, cam ring spring and spring seat. Install spring by pushing it against pump housing.

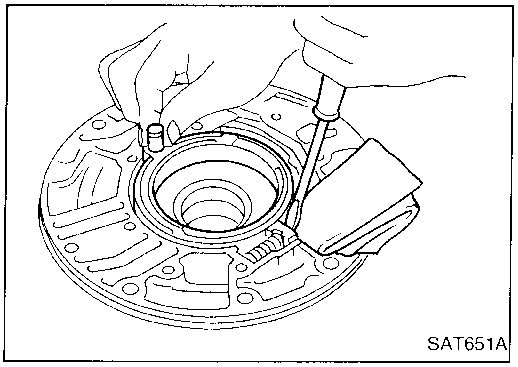

e. While pushing on cam ring install pivot pin.

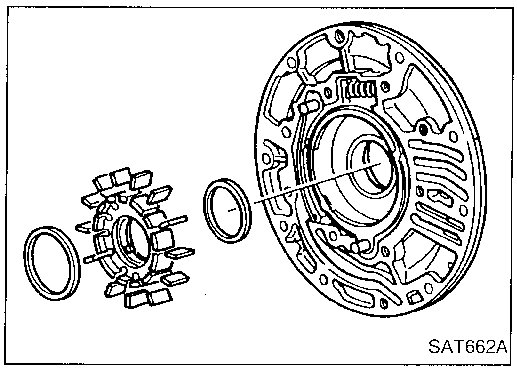

3. Install rotor, vanes and vane rings.
- **Pay attention to direction of rotor.**

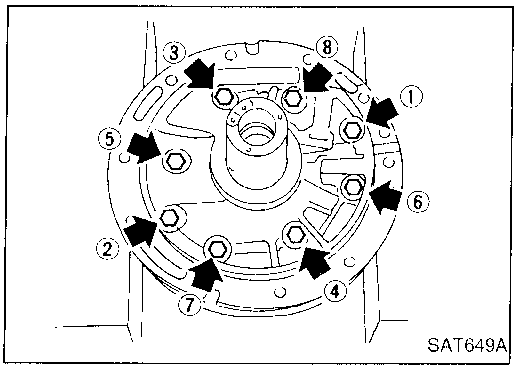

4. Install oil pump housing and oil pump cover.
a. Wrap masking tape around splines of oil pump cover assembly to protect seal. Position oil pump cover assembly in oil pump housing assembly, then remove masking tape.
b. Tighten bolts in a criss-cross pattern.

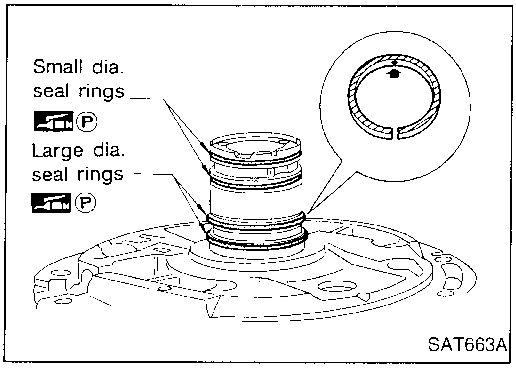

5. Install new seal rings carefully after packing ring grooves with petroleum jelly. Press rings down into jelly to a close fit.
- **Seal rings come in two different diameters. Check fit carefully in each groove.**
  Small dia. seal ring:
  No mark
  Large dia. seal ring:
  Yellow mark in area shown by arrow
- **Do not spread gap of seal ring excessively while installing. It may deform ring.**

Control Valve Assembly

SEC. 317

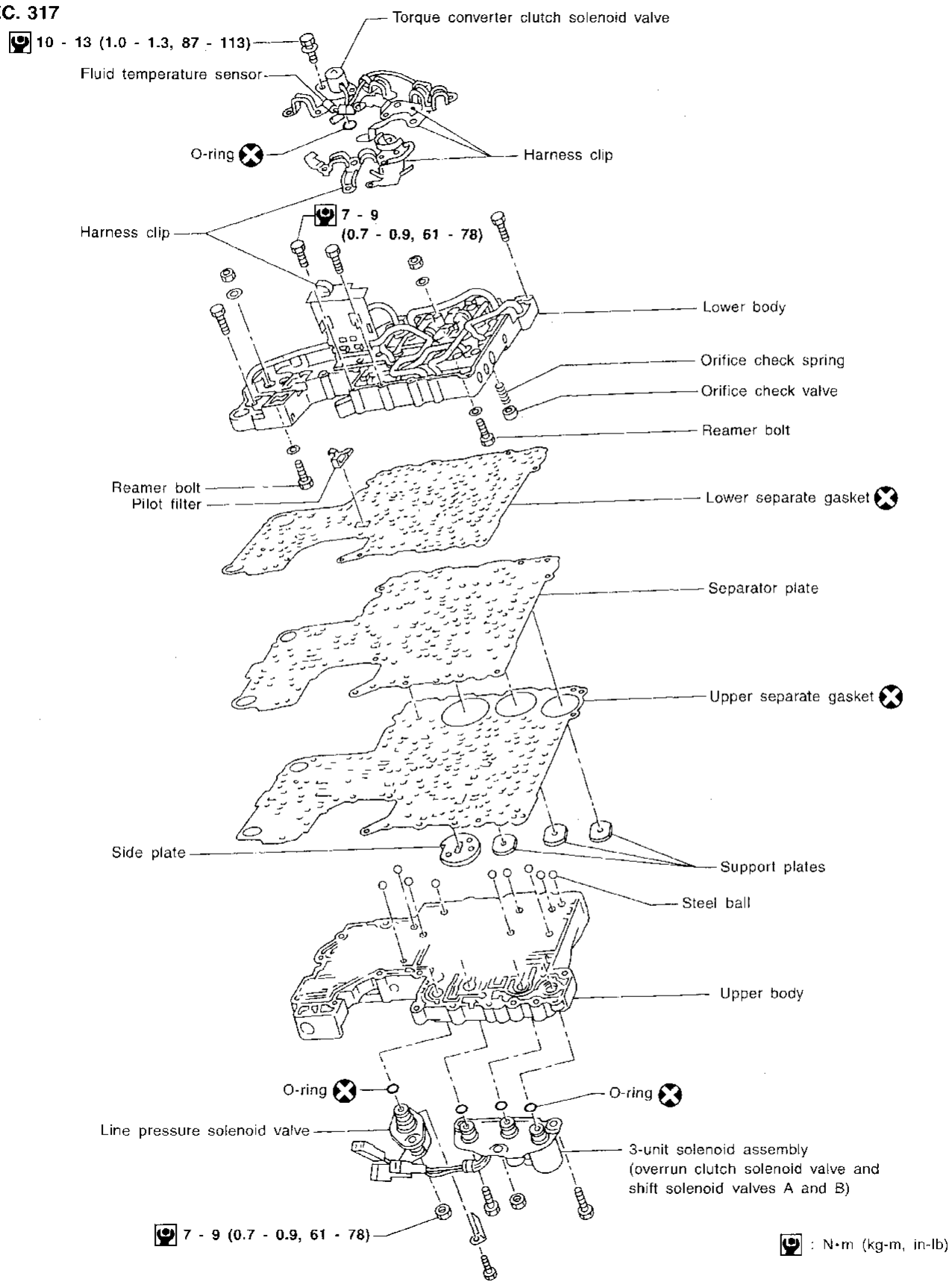

SAT664I

Control Valve Assembly (Cont'd)

DISASSEMBLY

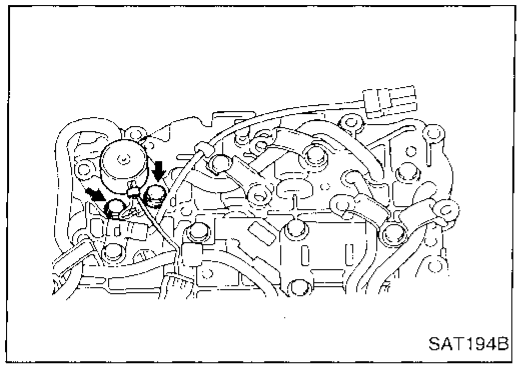

1. Remove solenoids.
a. Remove torque converter clutch solenoid valve and side plate from lower body.
b. Remove O-ring from solenoid.

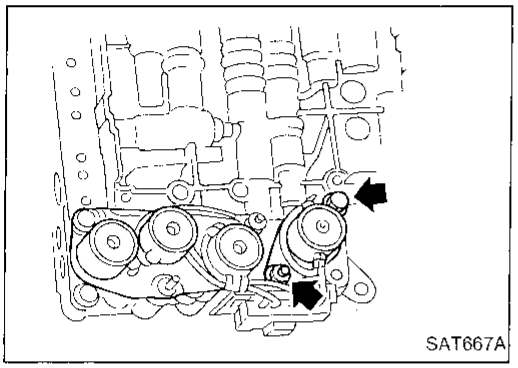

c. Remove line pressure solenoid valve from upper body.
d. Remove O-ring from solenoid.

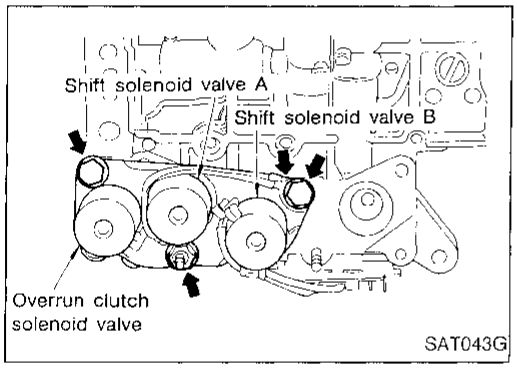

e. Remove 3-unit solenoid assembly from upper body.
f. Remove O-rings from solenoids.

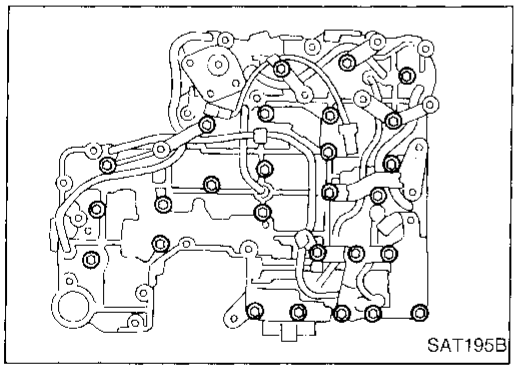

2. Disassemble upper and lower bodies.
a. Place upper body facedown, and remove bolts, reamer bolts and support plates.
b. Remove lower body, separator plate and separate gasket as a unit from upper body.

- **Be careful not to drop pilot filter, orifice check valve, spring and steel balls.**

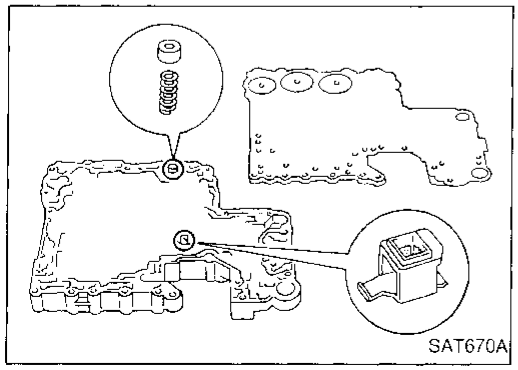

c. Place lower body facedown, and remove separate gasket and separator plate.
d. Remove pilot filter, orifice check valve and orifice check spring.

Control Valve Assembly (Cont'd)

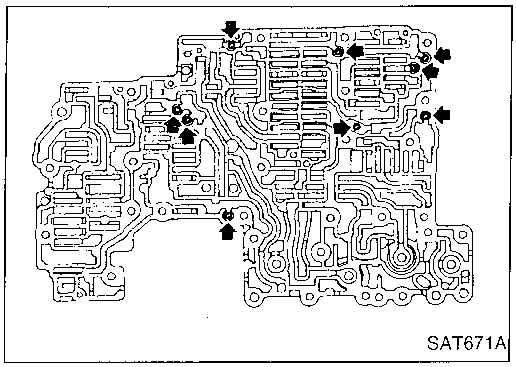
SAT671A

e. Check to see that steel balls are properly positioned in upper body. Then remove them from upper body.

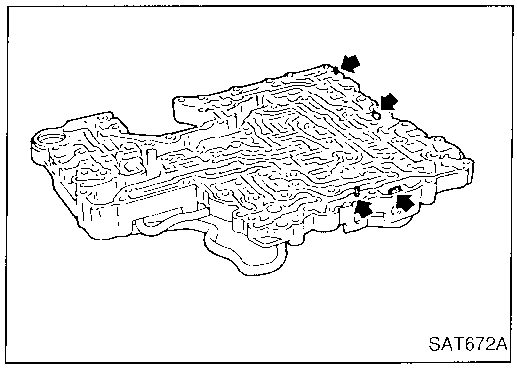
SAT672A

INSPECTION

Lower and upper bodies

- Check to see that there are pins and retainer plates in lower body.

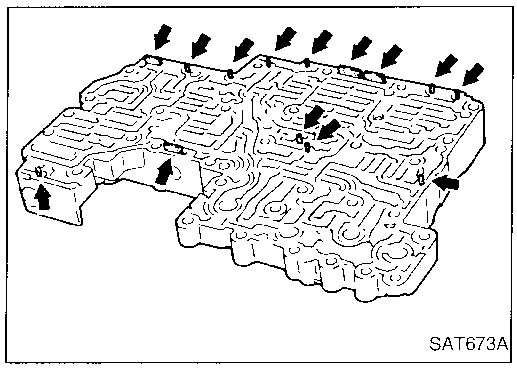
SAT673A

- Check to see that there are pins and retainer plates in upper body.
- **Be careful not to lose these parts.**

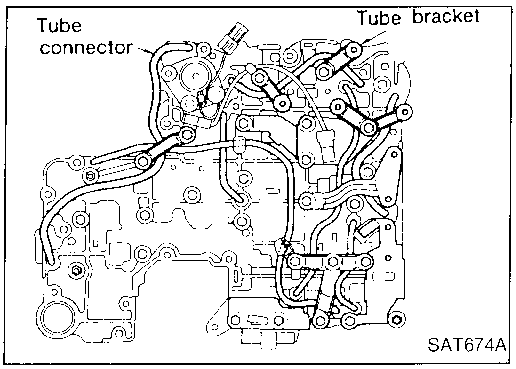

SAT674A

- Check to make sure that oil circuits are clean and free from damage.
- Check tube brackets and tube connectors for damage.

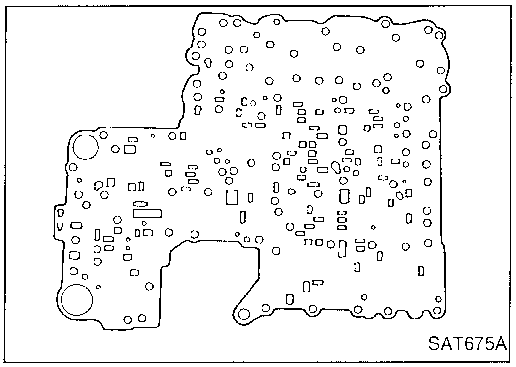
SAT675A

Separator plates

- Make sure that separator plate is free of damage and not deformed and oil holes are clean.

Control Valve Assembly (Cont'd)

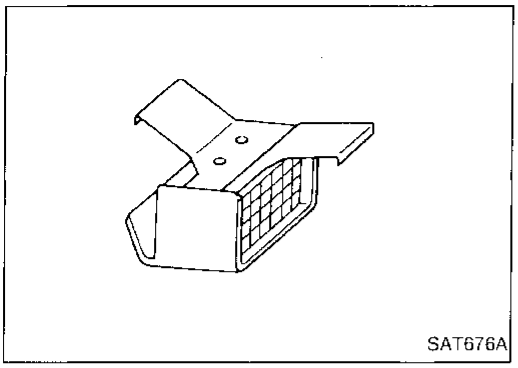
SAT676A

Pilot filter

- Check to make sure that filter is not clogged or damaged.

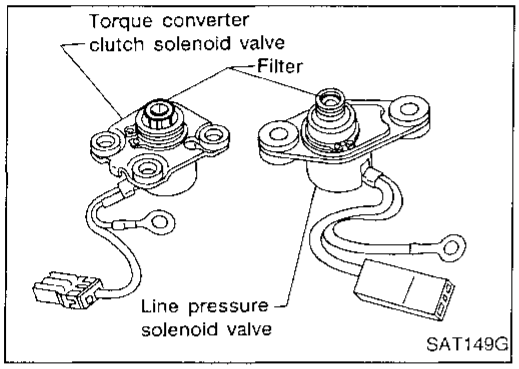

SAT149G

Torque converter clutch solenoid valve

- Check that filter is not clogged or damaged.
- Measure resistance. Refer to "Component Inspection", AT-79.

Line pressure solenoid valve

- Check that filter is not clogged or damaged.
- Measure resistance. Refer to "Component Inspection", AT-79.

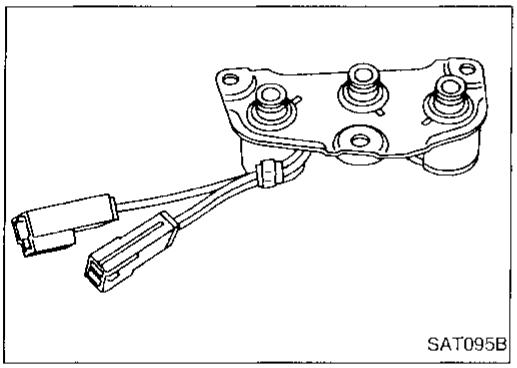
SAT095B

3-unit solenoid assembly (Overrun clutch solenoid valve and shift solenoid valves A and B)

- Measure resistance of each solenoid. Refer to "Component Inspection", AT-79.

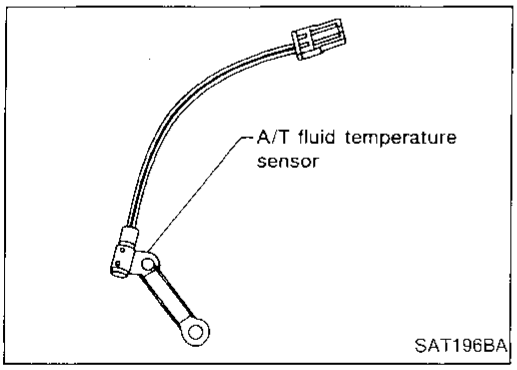

SAT196BA

A/T fluid temperature sensor

- Measure resistance. Refer to "Component Inspection", AT-63.

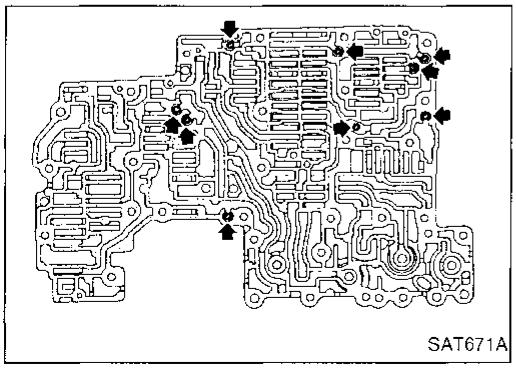
SAT671A

ASSEMBLY

1. Install upper and lower bodies.

a. Place oil circuit of upper body face up. Install steel balls in their proper positions.

Control Valve Assembly (Cont'd)

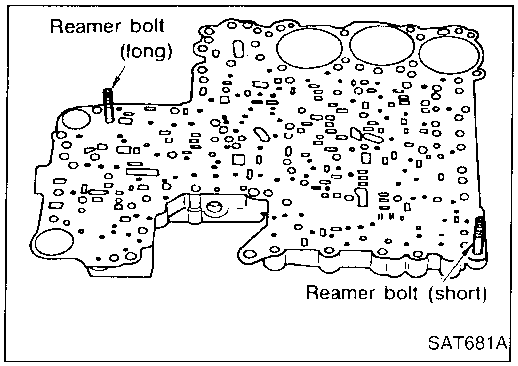

b. Install reamer bolts from bottom of upper body and install separate gaskets.

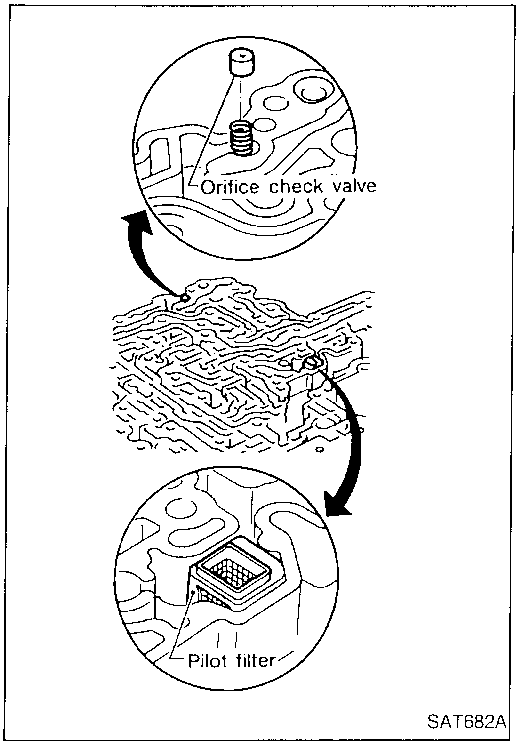

c. Place oil circuit of lower body face up. Install orifice check spring, orifice check valve and pilot filter.

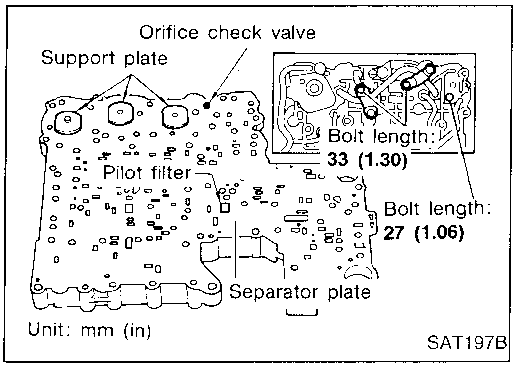

d. Install lower separate gaskets and separator plates on lower body.

e. Install and temporarily tighten support plates, fluid temperature sensor and tube brackets.

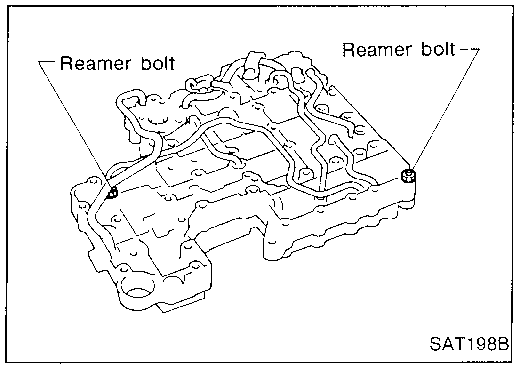

f. Temporarily assemble lower and upper bodies, using reamer bolt as a guide.

- **Be careful not to dislocate or drop steel balls, orifice check spring, orifice check valve and pilot filter.**

Control Valve Assembly (Cont'd)

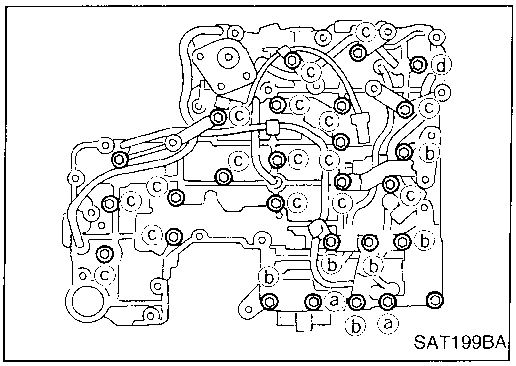

g. Install and temporarily tighten bolts and tube brackets in their proper locations.

Bolt length and location:

Bolt symbol		ⓐ	ⓑ	ⓒ	ⓓ
Bolt length	mm (in)	70 (2.76)	50 (1.97)	33 (1.30)	27 (1.06)

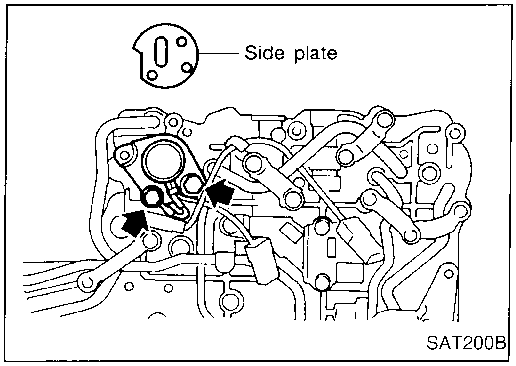

2. Install solenoids.
a. Attach O-ring and install torque converter clutch solenoid valve and side plates onto lower body.

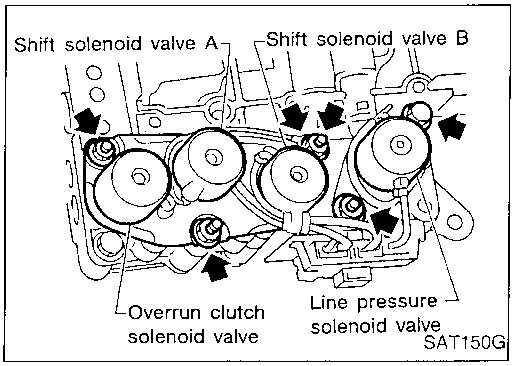

b. Attach O-rings and install 3-unit solenoids assembly onto upper body.
c. Attach O-ring and install line pressure solenoid valve onto upper body.
3. Tighten all bolts.

Control Valve Upper Body

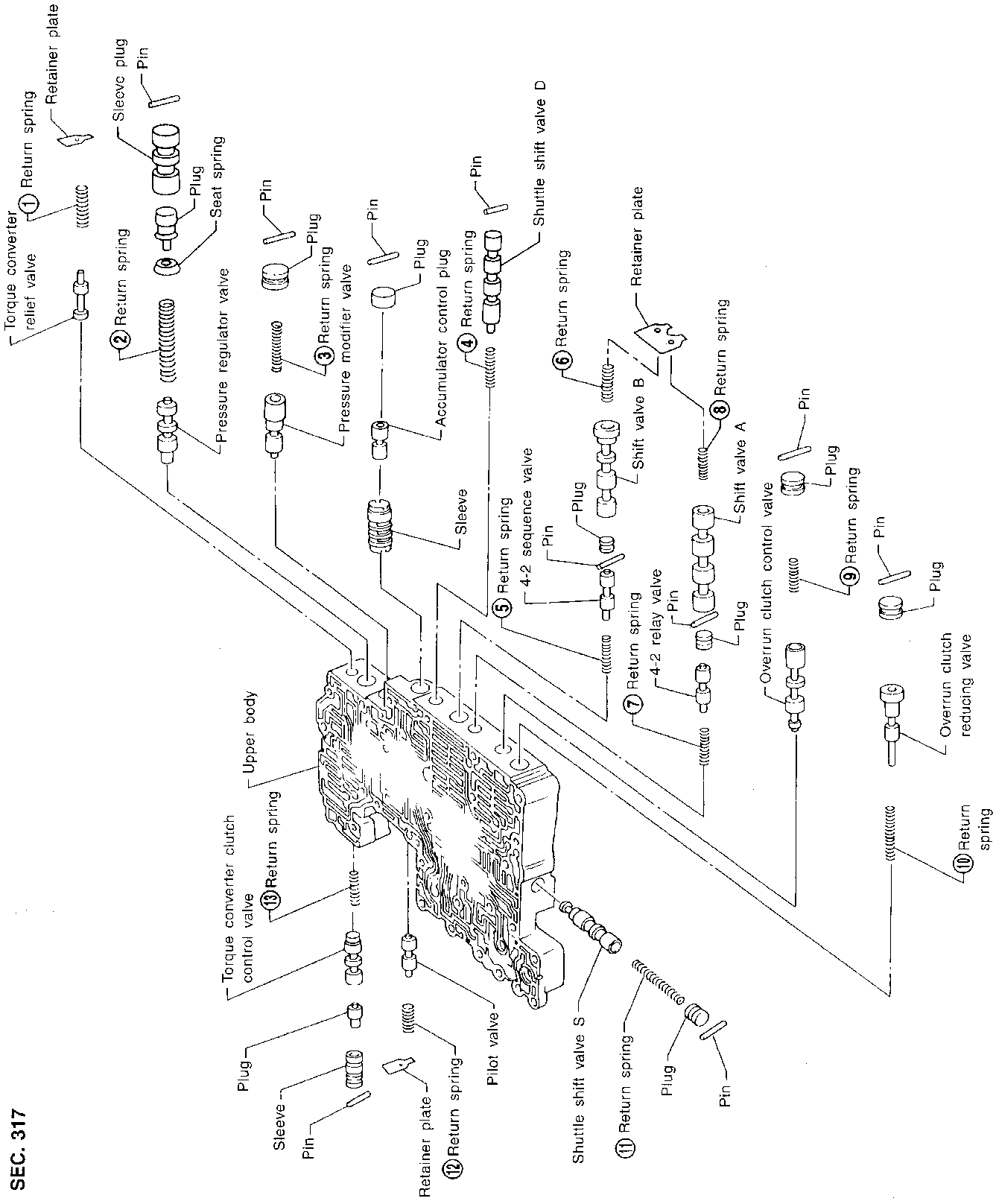

SEC. 317

Apply ATF to all components before their installation.
Numbers preceding valve springs correspond with those shown in SDS on page AT-215.

SAT665I

Control Valve Upper Body (Cont'd)

DISASSEMBLY

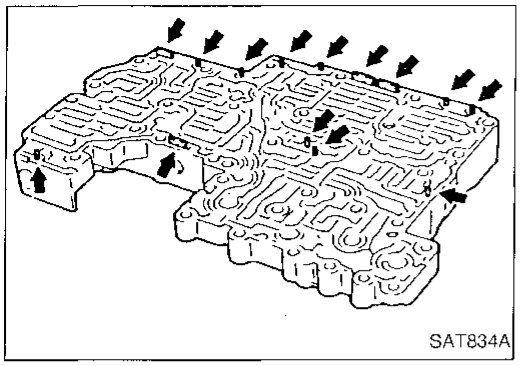

1. Remove valves at parallel pins.
- **Do not use a magnetic hand.**

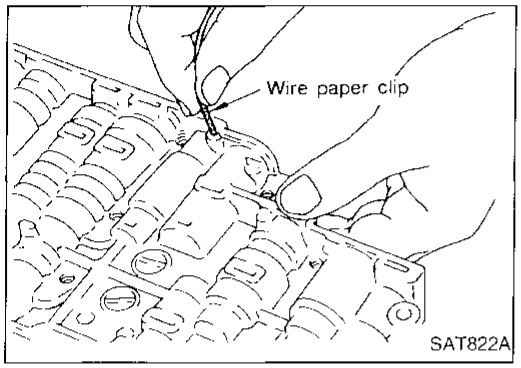

a. Use a wire paper clip to push out parallel pins.

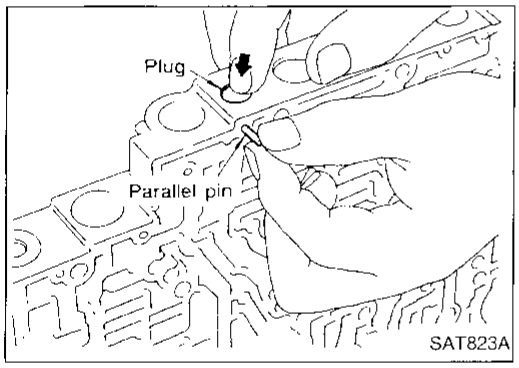

b. Remove parallel pins while pressing their corresponding plugs and sleeves.
- **Remove plug slowly to prevent internal parts from jumping out.**

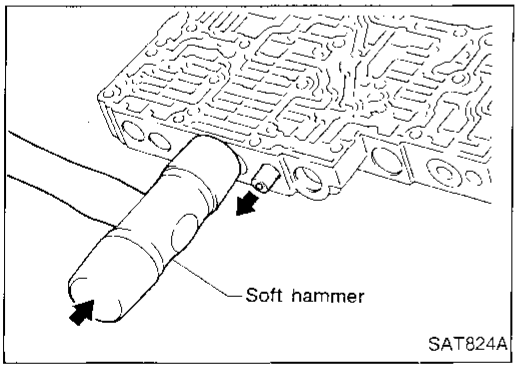

c. Place mating surface of valve facedown, and remove internal parts.
- **If a valve is hard to remove, place valve body facedown and lightly tap it with a soft hammer.**
- **Be careful not to drop or damage valves and sleeves.**

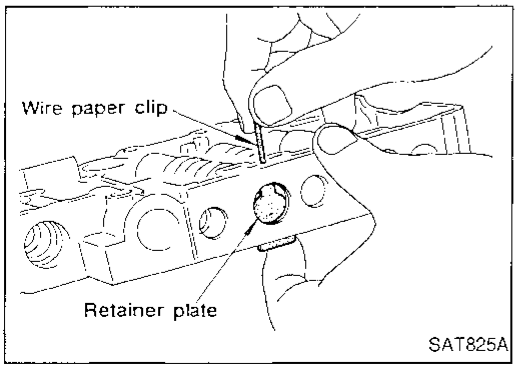

2. Remove valves at retainer plates.
a. Pry out retainer plate with wire paper clip.

Control Valve Upper Body (Cont'd)

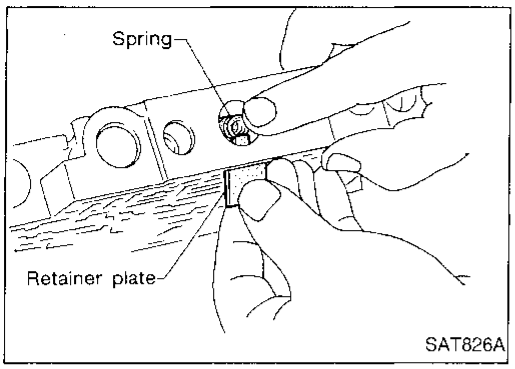

b. Remove retainer plates while holding spring.

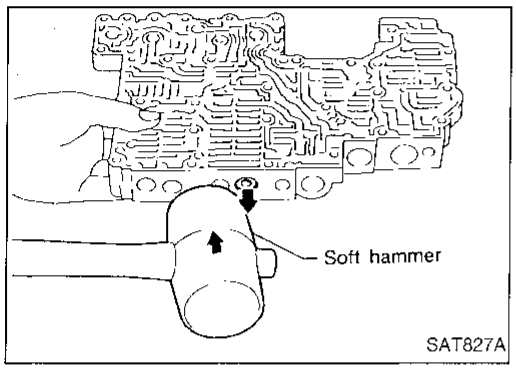

c. Place mating surface of valve facedown, and remove internal parts.

- **If a valve is hard to remove, lightly tap valve body with a soft hammer.**
- **Be careful not to drop or damage valves, sleeves, etc.**

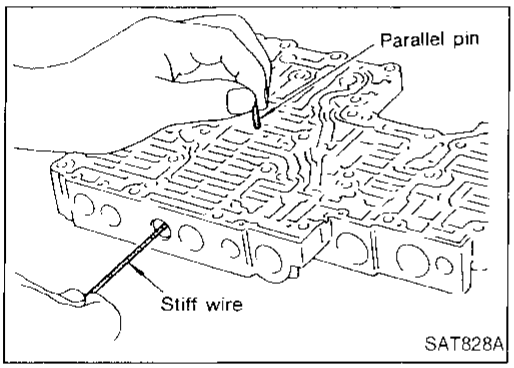

- 4-2 sequence valve and relay valve are located far back in upper body. If they are hard to remove, carefully push them out using stiff wire.
- **Be careful not to scratch sliding surface of valve with wire.**

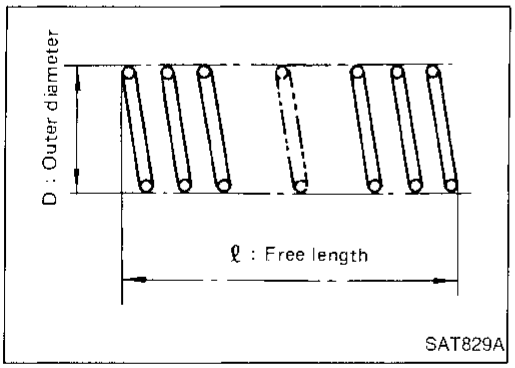

INSPECTION

Valve springs

- Measure free length and outer diameter of each valve spring. Also check for damage or deformation.
  Inspection standard:
  Refer to SDS, AT-215.
- Replace valve springs if deformed or fatigued.

Control valves

- Check sliding surfaces of valves, sleeves and plugs.

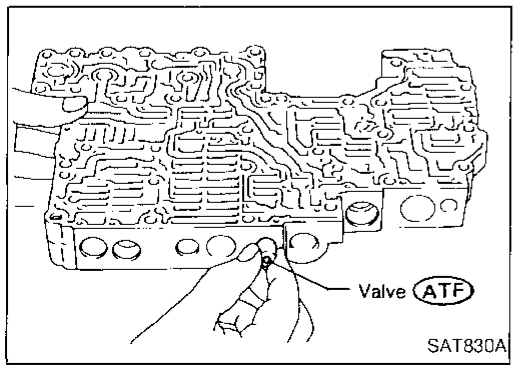

ASSEMBLY

1. Lubricate the control valve body and all valves with ATF. Install control valves by sliding them carefully into their bores.

- **Be careful not to scratch or damage valve body.**

Control Valve Upper Body (Cont'd)

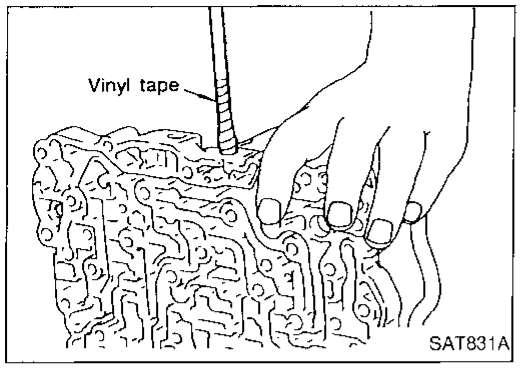

- Wrap a small screwdriver with vinyl tape and use it to insert the valves into proper position.

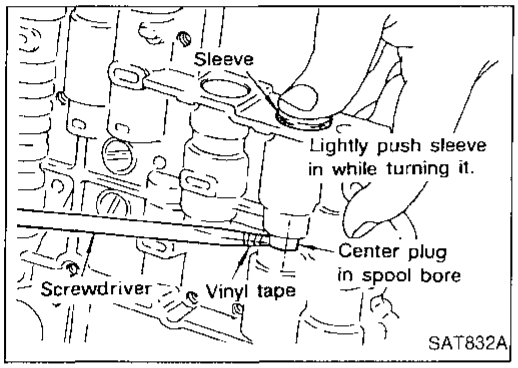

Pressure regulator valve

- If pressure regulator plug is not centered properly, sleeve cannot be inserted into bore in upper body.
  If this happens, use vinyl tape wrapped screwdriver to center sleeve until it can be inserted.
- Turn sleeve slightly while installing.

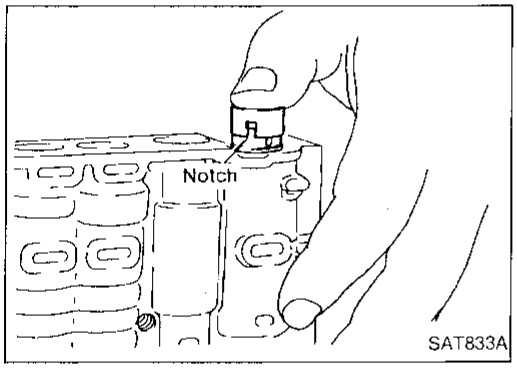

Accumulator control plug

- Align protrusion of accumulator control sleeve with notch in plug.
- Align parallel pin groove in plug with parallel pin, and install accumulator control valve.

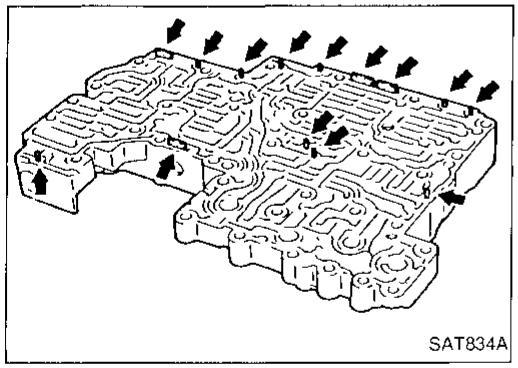

2. Install parallel pins and retainer plates.

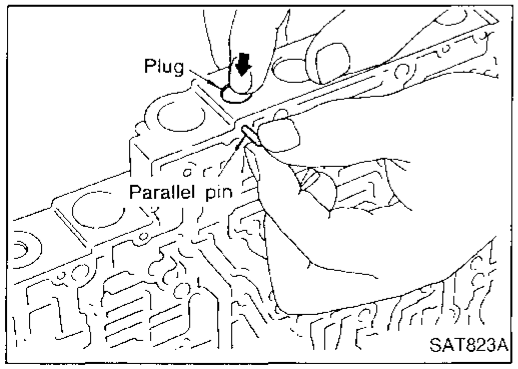

- **While pushing plug, install parallel pin.**

Control Valve Upper Body (Cont'd)

4-2 sequence valve and relay valve

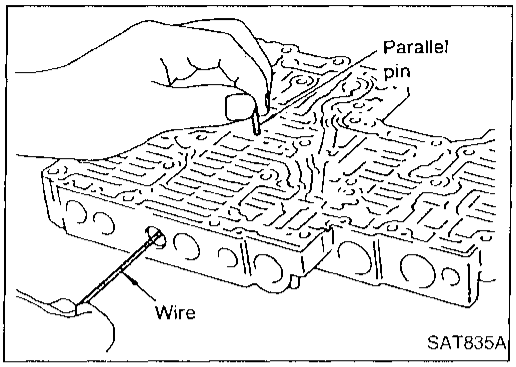

- Push 4-2 sequence valve and relay valve with wire wrapped in vinyl tape to prevent scratching valve body. Install parallel pins.

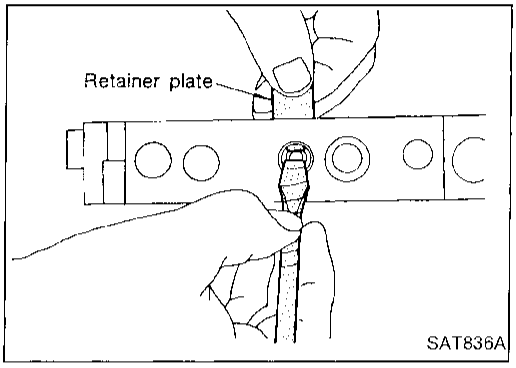

- Insert retainer plate while pushing spring.

Control Valve Lower Body

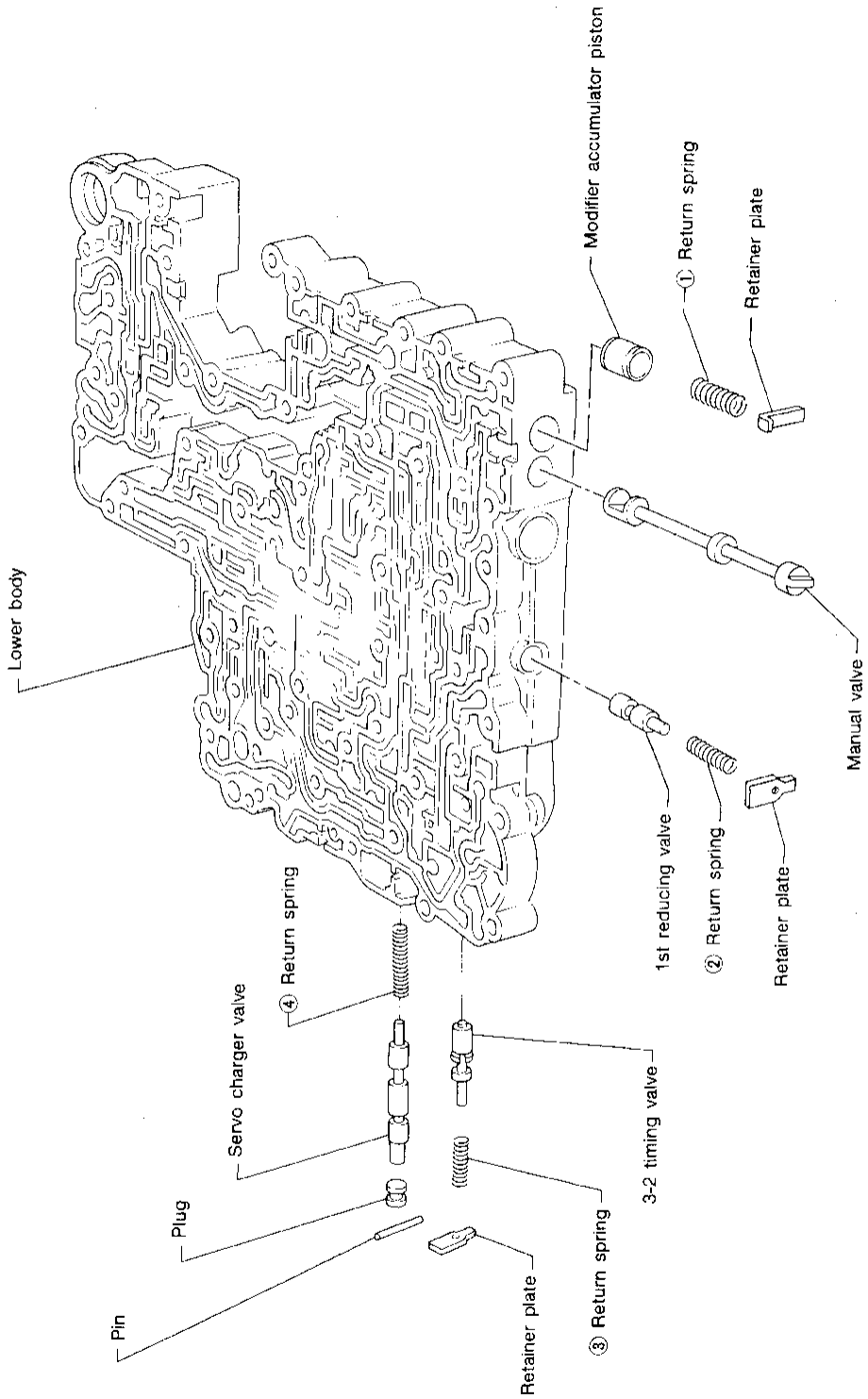

SEC. 317

Apply ATF to all components before their installation.
Numbers preceding valve springs correspond with those shown in SDS on page AT-215.

SAT112GA

Control Valve Lower Body (Cont'd)

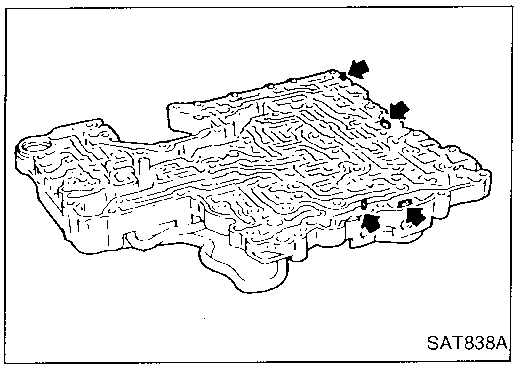

DISASSEMBLY

1. Remove valves at parallel pins.
2. Remove valves at retainer plates.
   For removal procedures, refer to "DISASSEMBLY" of Control Valve Upper Body.

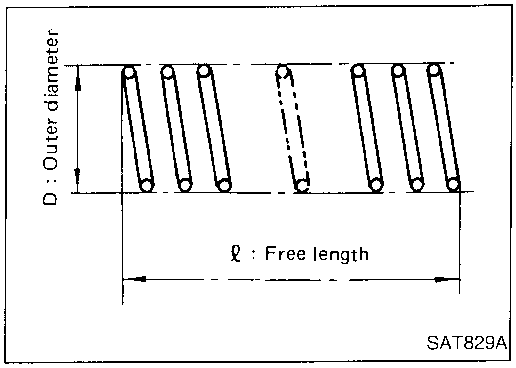

INSPECTION

Valve springs

- Check each valve spring for damage or deformation. Also measure free length and outer diameter.
  Inspection standard:
  Refer to SDS, AT-215.
- Replace valve springs if deformed or fatigued.

Control valves

- Check sliding surfaces of control valves, sleeves and plugs for damage.

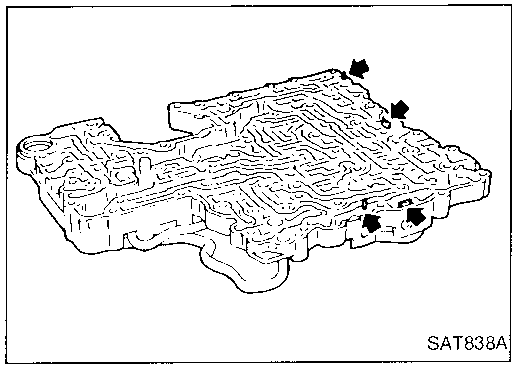

ASSEMBLY

- Install control valves.
  For installation procedures, refer to "ASSEMBLY" of Control Valve Upper Body, AT-165.

Reverse Clutch

SEC. 315

ATF : Apply ATF.
★ : Select with proper thickness.

Direction of oil seal
Direction of dish plate
Driven plate ATF
D-ring ATF
Reverse clutch drum ATF
Snap ring
Retaining plate ★
Drive plate ATF
Dish plate ATF
Snap ring
Spring retainer
Return spring
Piston ATF
Oil seal ATF
Dish plate
Drive plate
Retaining plate
Snap ring
Driven plate

SAT082EB

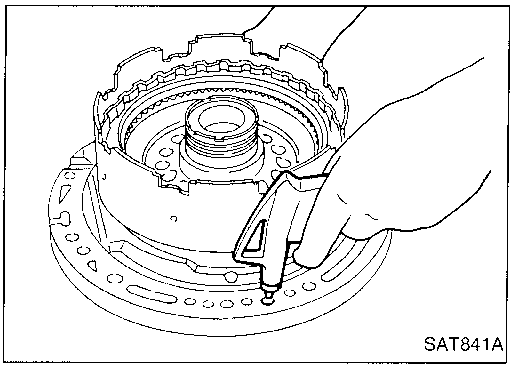

DISASSEMBLY

1. Check operation of reverse clutch.

a. Install seal ring onto oil pump cover and install reverse clutch. Apply compressed air to oil hole.
b. Check to see that retaining plate moves to snap ring.
c. If retaining plate does not contact snap ring,

- D-ring might be damaged.
- Oil seal might be damaged.
- Fluid might be leaking past piston check ball.

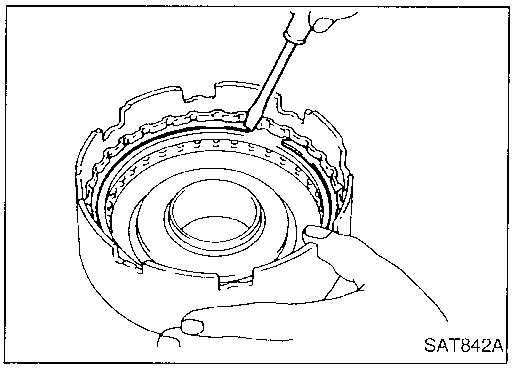

2. Remove drive plates, driven plates, retaining plate, dish plate and snap ring.

Reverse Clutch (Cont'd)

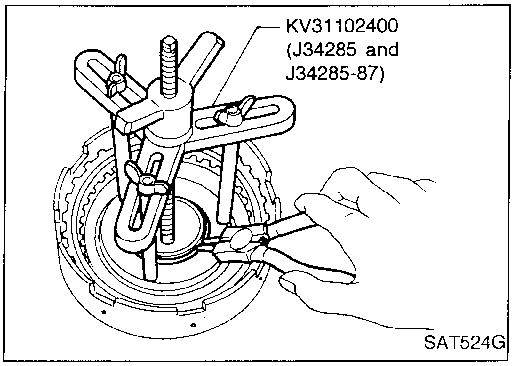

3. Remove snap ring from clutch drum while compressing clutch springs.
- **Do not expand snap ring excessively.**
4. Remove spring retainer and return spring.

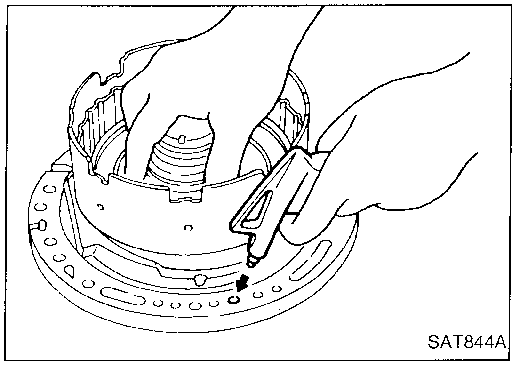

5. Install seal ring onto oil pump cover and install reverse clutch drum. While holding piston, gradually apply compressed air to oil hole until piston is removed.
- **Do not apply compressed air abruptly.**
6. Remove D-ring and oil seal from piston.

INSPECTION

Reverse clutch snap ring and spring retainer

- Check for deformation, fatigue or damage.

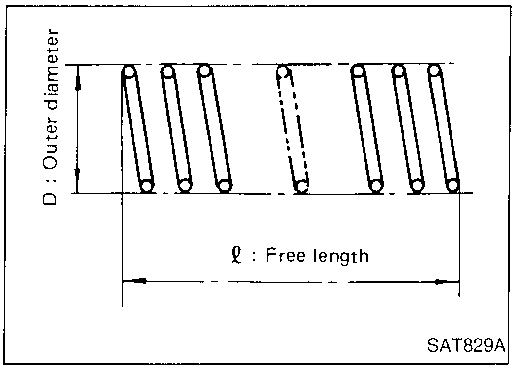

Reverse clutch return springs

- Check for deformation or damage. Also measure free length and outside diameter.
  Inspection standard:
  Refer to SDS, AT-215.

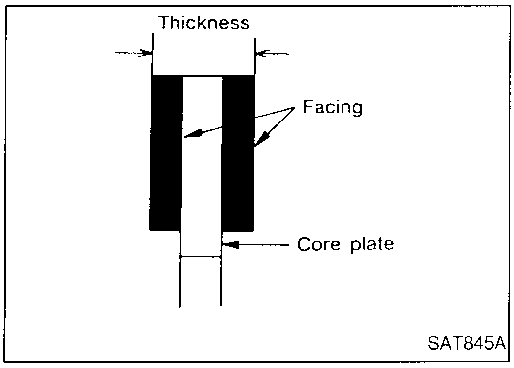

Reverse clutch drive plates

- Check facing for burns, cracks or damage.
- Measure thickness of facing.
  Thickness of drive plate:
  Standard value: 1.90 - 2.05 mm (0.0748 - 0.0807 in)
  Wear limit: 1.80 mm (0.0709 in)
- If not within wear limit, replace.

Reverse clutch dish plate

- Check for deformation or damage.

Reverse Clutch (Cont'd)

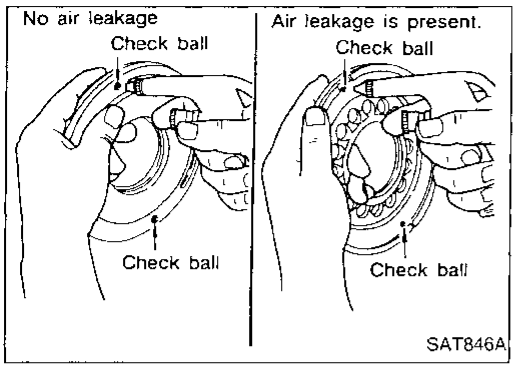

Reverse clutch piston

- Shake piston to assure that balls are not seized.
- Apply compressed air to check ball oil hole opposite the return spring. Make sure there is no air leakage.
- Also apply compressed air to oil hole on return spring side to assure that air leaks past ball.

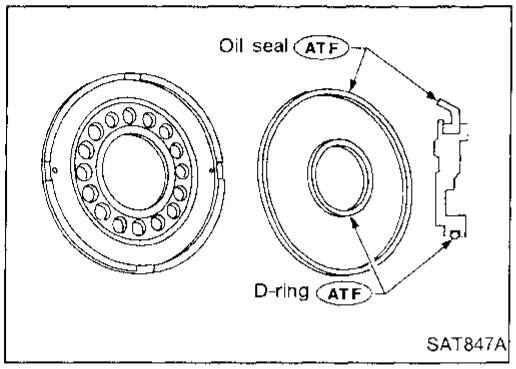

ASSEMBLY

1. Install D-ring and oil seal on piston.
- **Apply ATF to both parts.**

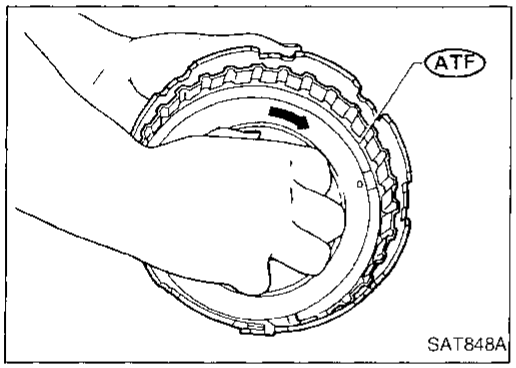

2. Install piston assembly by turning it slowly and evenly.
- **Apply ATF to inner surface of drum.**

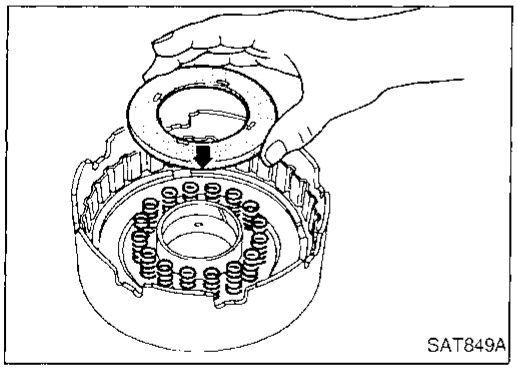

3. Install return springs and spring retainer.

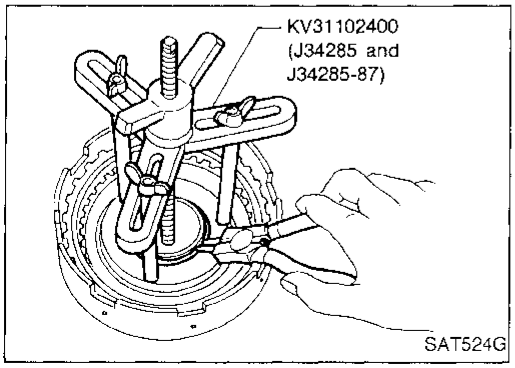

4. Install snap ring while compressing clutch springs.

Reverse Clutch (Cont'd)

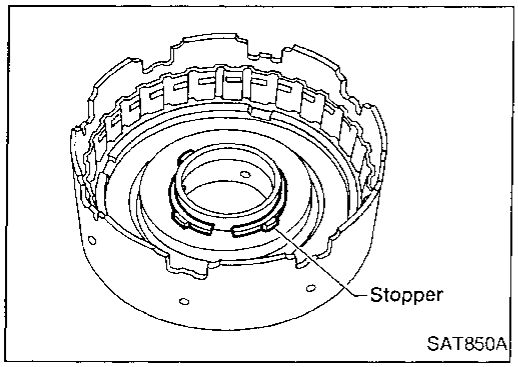

- **Do not align snap ring gap with spring retainer stopper.**

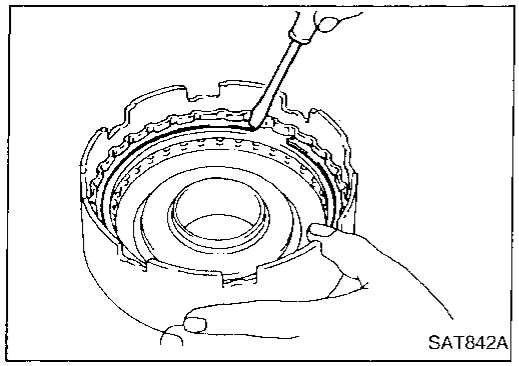

5. Install drive plates, driven plates, retaining plate and dish plate.
6. Install snap ring.

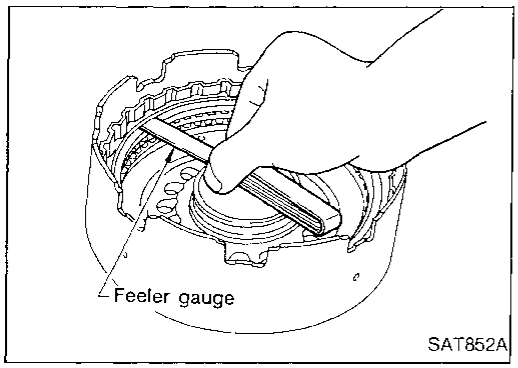

7. Measure clearance between retaining plate and snap ring. If not within allowable limit, select proper retaining plate.
   Specified clearance:
   Standard
   0.5 - 0.8 mm (0.020 - 0.031 in)
   Allowable limit
   1.2 mm (0.047 in)
   Retaining plate:
   Refer to SDS, AT-216.

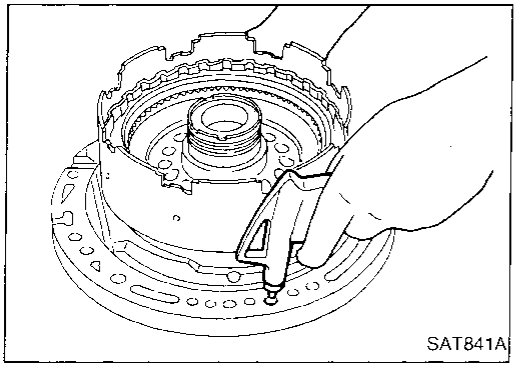

8. Check operation of reverse clutch.
   Refer to "DISASSEMBLY" of Reverse Clutch, AT-170.

High Clutch

SEC. 315

For the number of clutch sheets (drive plate and driven plate), refer to the below cross-section.

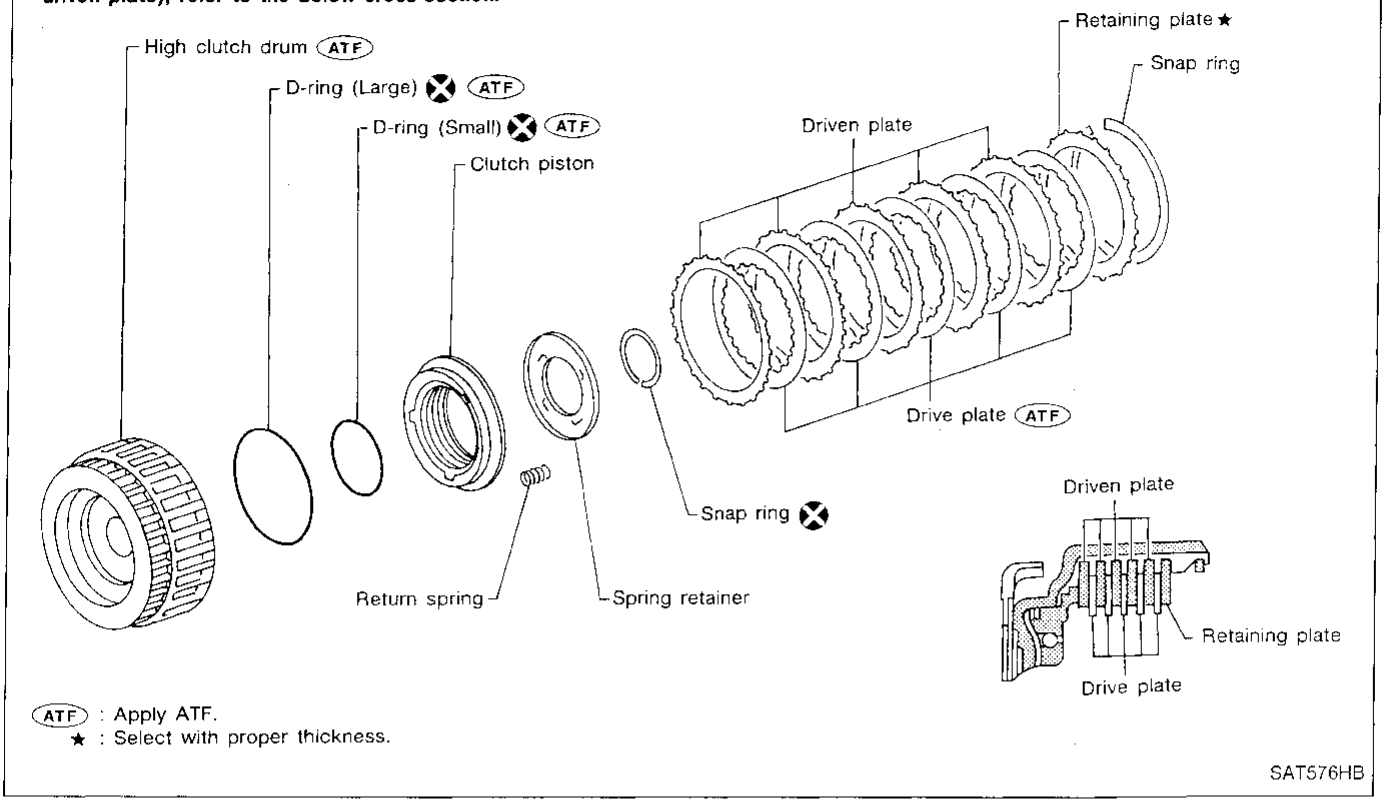

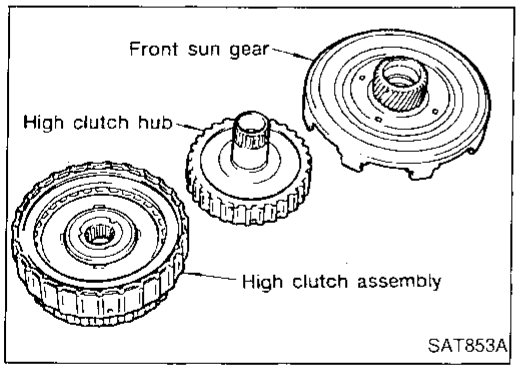

DISASSEMBLY AND ASSEMBLY

Service procedures for high clutch are essentially the same as those for reverse clutch, with the following exception:

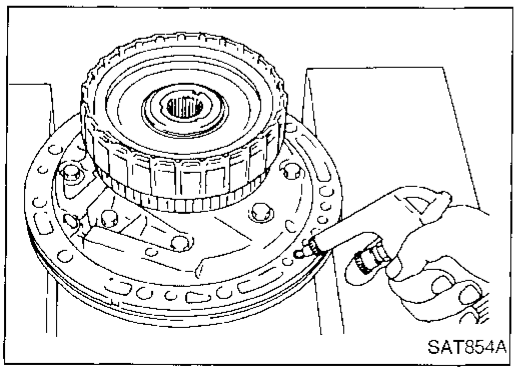

- Check of high clutch operation

High Clutch (Cont'd)

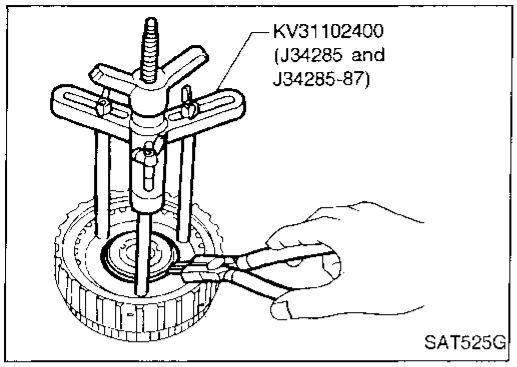

- Removal and installation of return spring

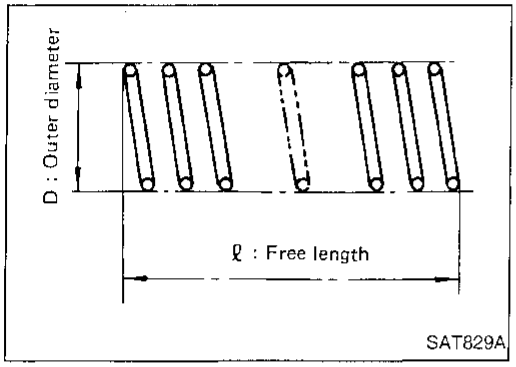

- Inspection of high clutch return springs
  Inspection standard:
  Refer to SDS, AT-215.

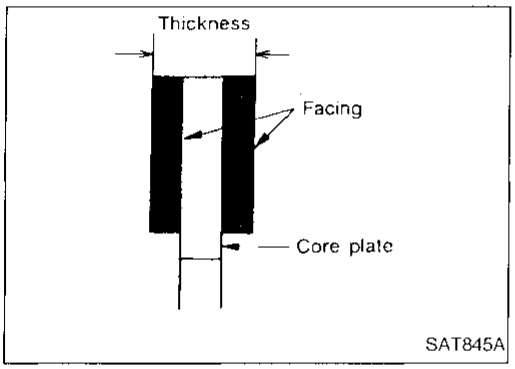

- Inspection of high clutch drive plate
  Thickness of drive plate:
  Standard
  1.52 - 1.67 mm (0.0598 - 0.0657 in)
  Wear limit
  1.40 mm (0.0551 in)

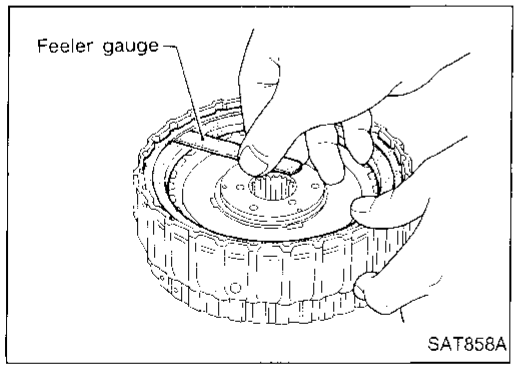

- Measurement of clearance between retaining plate and snap ring
  Specified clearance:
  Standard
  1.8 - 2.2 mm (0.071 - 0.087 in)
  Allowable limit
  2.8 mm (0.110 in)
  Retaining plate:
  Refer to SDS, AT-216.

Forward and Overrun Clutches

SEC. 315

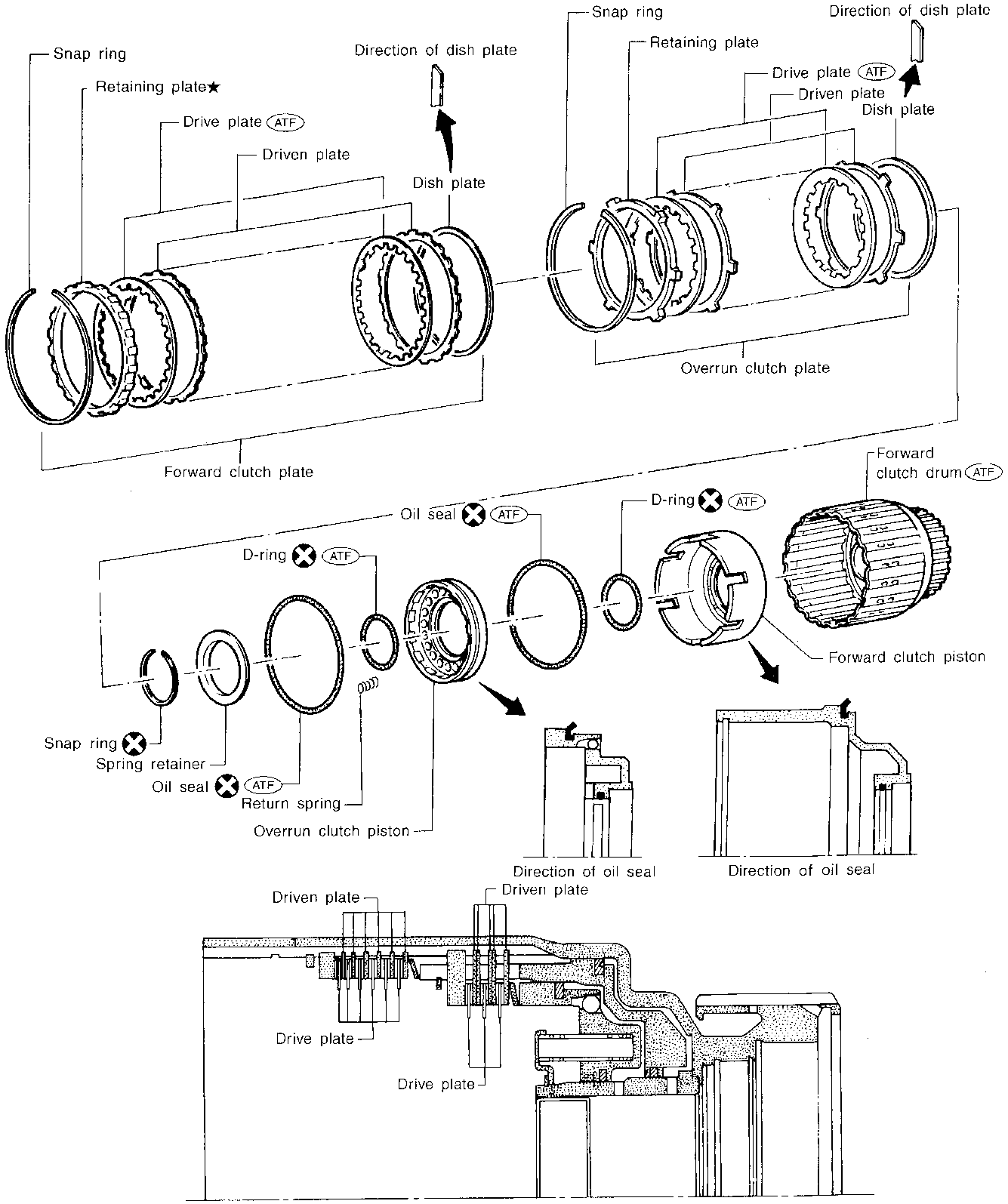

(ATF) : Apply ATF.

★ : Select with proper thickness.

SAT363I

Forward and Overrun Clutches (Cont'd)

DISASSEMBLY AND ASSEMBLY

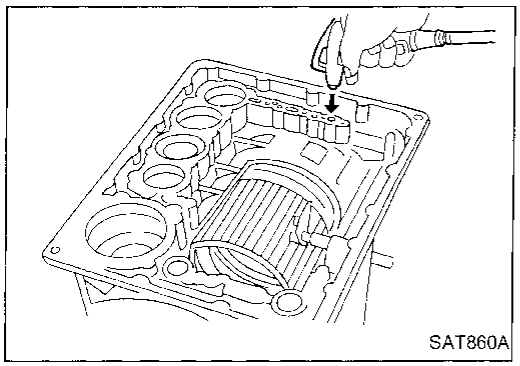
SAT860A

Forward and overrun clutches are serviced essentially the same way as reverse clutch is serviced. However, note the following exceptions.

- Check of forward clutch operation.

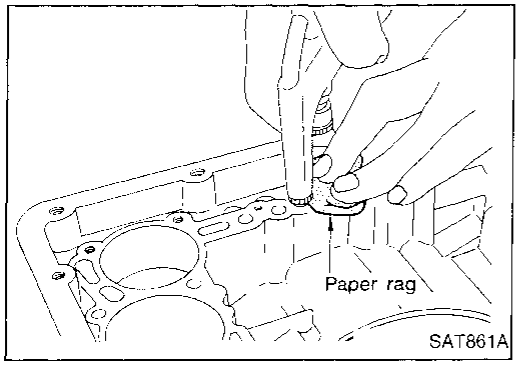

SAT861A

- Check of overrun clutch operation.

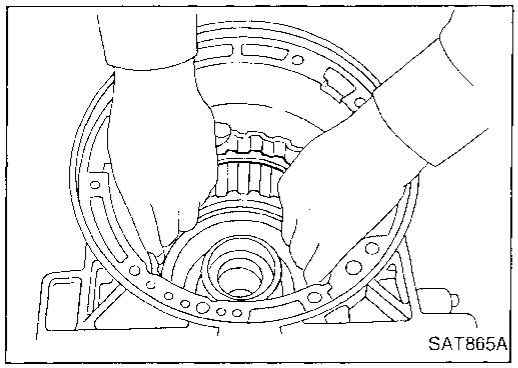
SAT865A

- Removal of forward clutch drum
  Remove forward clutch drum from transmission case by holding snap ring.

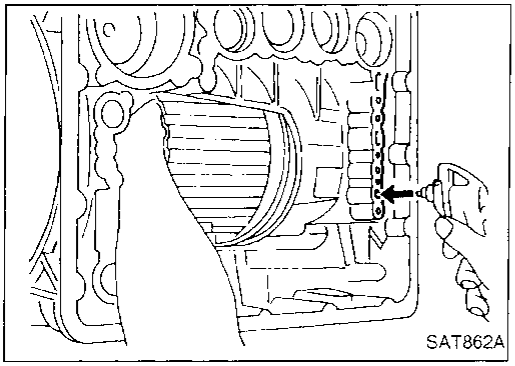
SAT862A

- Removal of forward clutch and overrun clutch pistons

1. While holding overrun clutch piston, gradually apply compressed air to oil hole.

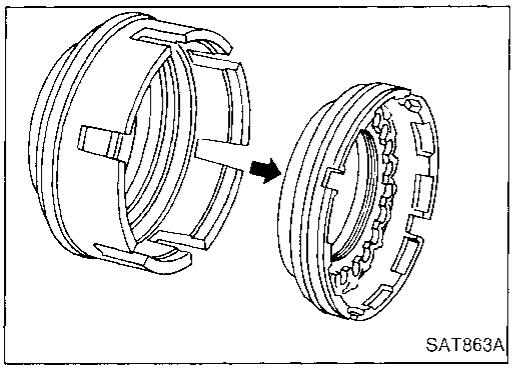
SAT863A

2. Remove overrun clutch from forward clutch.

Forward and Overrun Clutches (Cont'd)

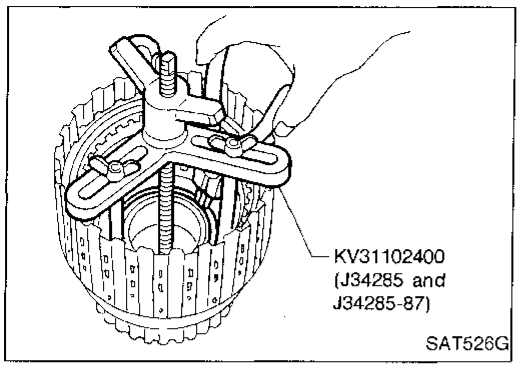

- Removal and installation of return springs

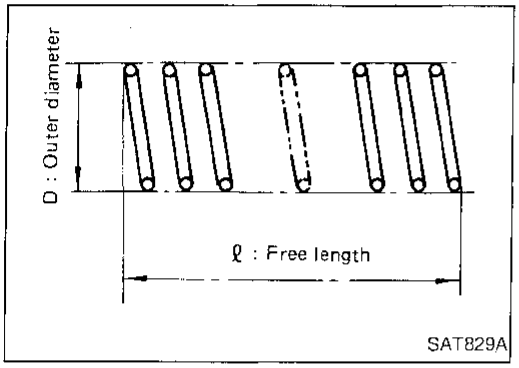

- Inspection of forward clutch and overrun clutch return springs
  Inspection standard:
  Refer to SDS, AT-215.

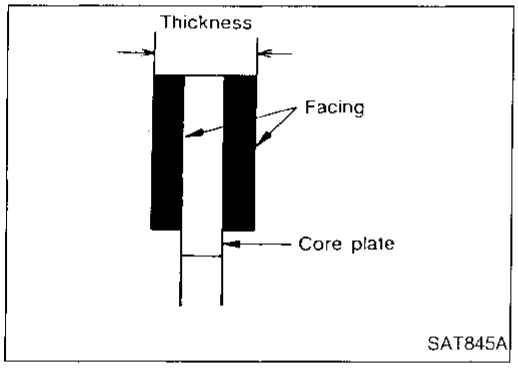

- Inspection of forward clutch drive plates
  Thickness of drive plate:
  Standard
  1.52 - 1.67 mm (0.0598 - 0.0657 in)
  Wear limit
  1.40 mm (0.0551 in)

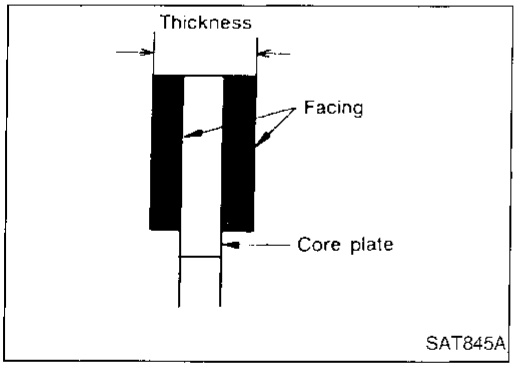

- Inspection of overrun clutch drive plates
  Thickness of drive plate:
  Standard
  1.90 - 2.05 mm (0.0748 - 0.0807 in)
  Wear limit
  1.80 mm (0.0709 in)

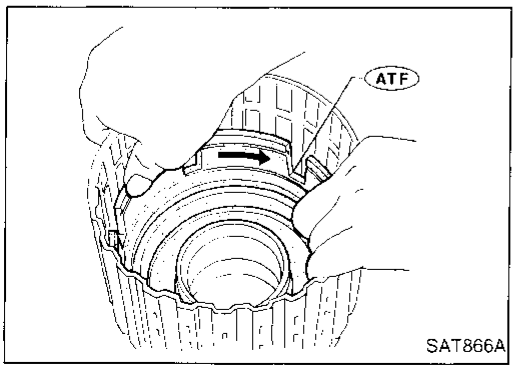

- Installation of forward clutch piston and overrun clutch piston

1. Install forward clutch piston by turning it slowly and evenly.

- **Apply ATF to inner surface of clutch drum.**

Forward and Overrun Clutches (Cont'd)

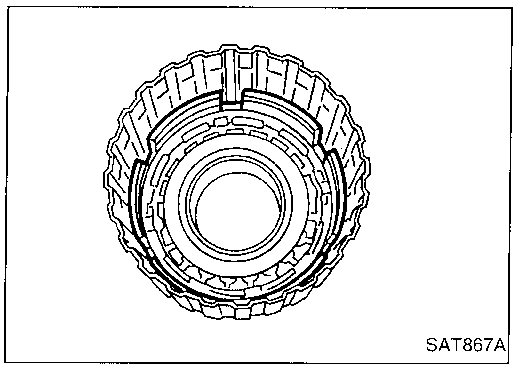

- **Align notch in forward clutch piston with groove in forward clutch drum.**

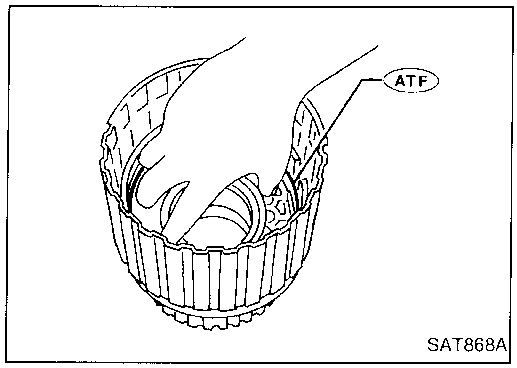

2. Install overrun clutch by turning it slowly and evenly.
- **Apply ATF to inner surface of forward clutch piston.**

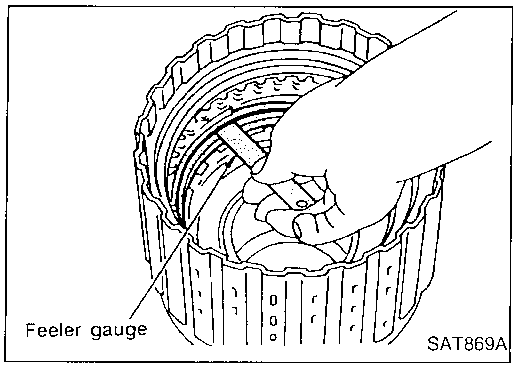

- Measurement of clearance between retaining plate and snap ring of overrun clutch
  Specified clearance:
  Standard
  1.0 - 1.4 mm (0.039 - 0.055 in)
  Allowable limit
  2.0 mm (0.079 in)
  Retaining plate:
  Refer to SDS, AT-216.

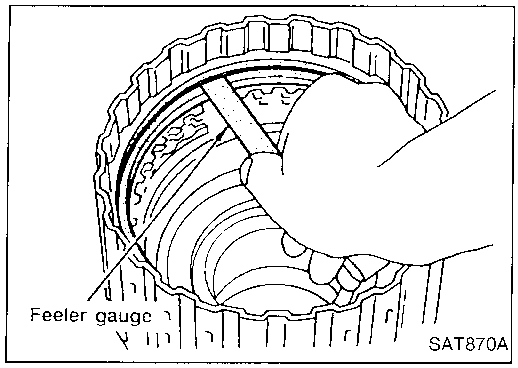

- Measurement of clearance between retaining plate and snap ring of forward clutch
  Specified clearance:
  Standard
  0.45 - 0.85 mm (0.0177 - 0.0335 in)
  Allowable limit
  1.85 mm (0.0728 in)
  Retaining plate:
  Refer to SDS, AT-216.

Low & Reverse Brake

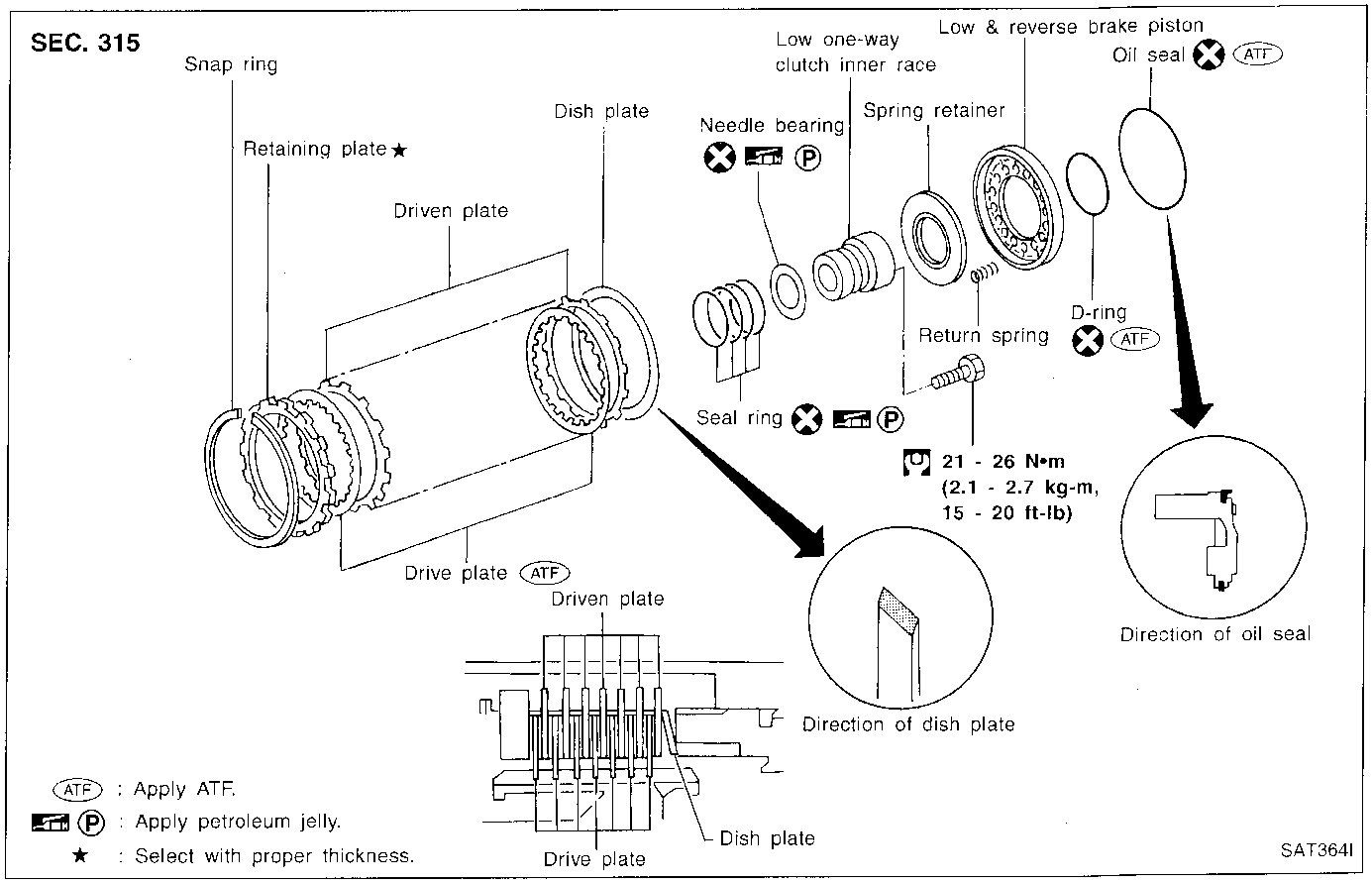

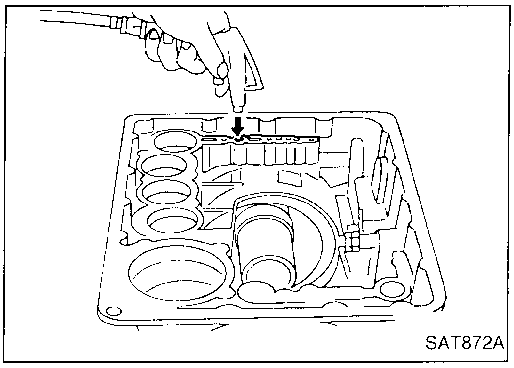

DISASSEMBLY

1. Check operation of low and reverse brake.

a. Install seal ring onto oil pump cover and install reverse clutch. Apply compressed air to oil hole.

b. Check to see that retaining plate moves to snap ring.

c. If retaining plate does not contact snap ring,

- D-ring might be damaged.
- Oil seal might be damaged.
- Fluid might be leaking past piston check ball.

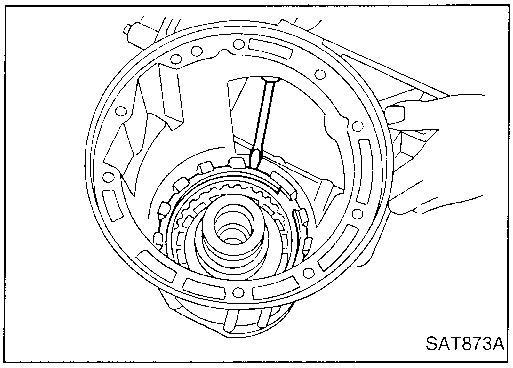

2. Remove snap ring, low and reverse brake drive plates, driven plates and dish plate.

Low & Reverse Brake (Cont'd)

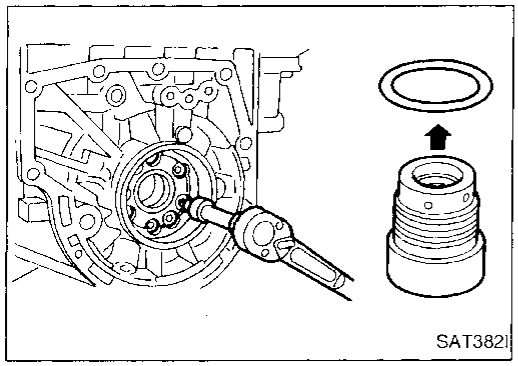

3. Remove low one-way clutch inner race, spring retainer and return spring from transmission case.
4. Remove seal rings from low one-way clutch inner race.
5. Remove needle bearing from low one-way clutch inner race.

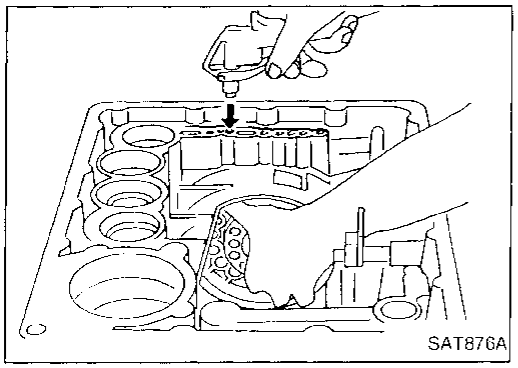

6. Remove low and reverse brake piston using compressed air.
7. Remove oil seal and D-ring from piston.

INSPECTION

Low and reverse brake snap ring and spring retainer

- Check for deformation, or damage.

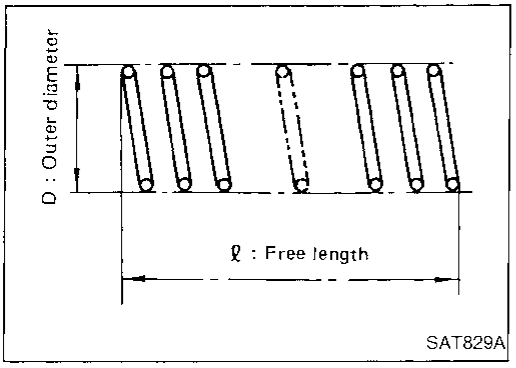

Low and reverse brake return springs

- Check for deformation or damage. Also measure free length and outside diameter.
  Inspection standard:
  Refer to SDS, AT-215.

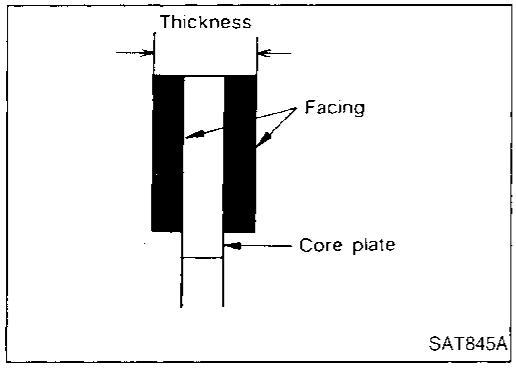

Low and reverse brake drive plates

- Check facing for burns, cracks or damage.
- Measure thickness of facing.
  Thickness of drive plate:
  Standard value
  1.90 - 2.05 mm (0.0748 - 0.0807 in)
  Wear limit
  1.80 mm (0.0709 in)
- If not within wear limit, replace.

Low & Reverse Brake (Cont'd)

Low one-way clutch inner race

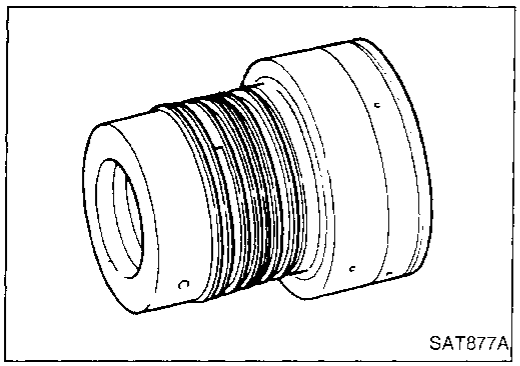

- Check frictional surface of inner race for wear or damage.

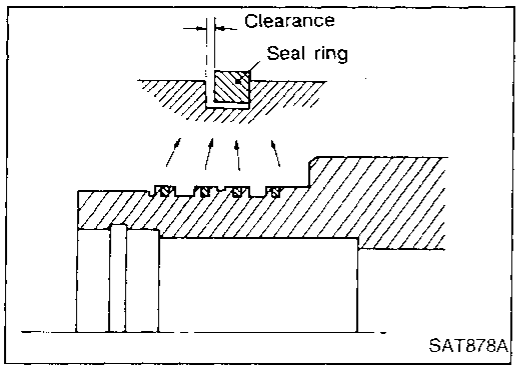

- Install a new seal rings onto low one-way clutch inner race.
- **Be careful not to expand seal ring gap excessively.**
- Measure seal ring-to-groove clearance.
  Inspection standard:
  Standard value: 0.10 - 0.25 mm (0.0039 - 0.0098 in)
  Allowable limit: 0.25 mm (0.0098 in)
- If not within allowable limit, replace low one-way clutch inner race.

ASSEMBLY

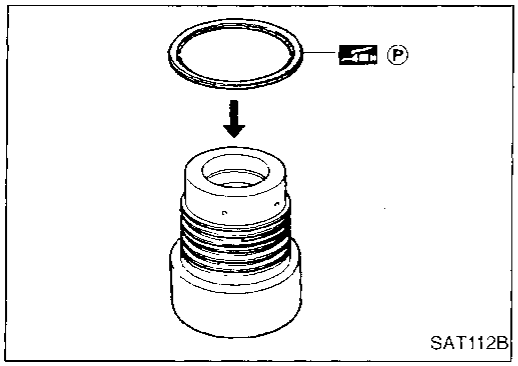

1. Install needle bearing onto one-way clutch inner race.
- **Pay attention to its direction — Black surface goes to rear side.**
- **Apply petroleum jelly to needle bearing.**

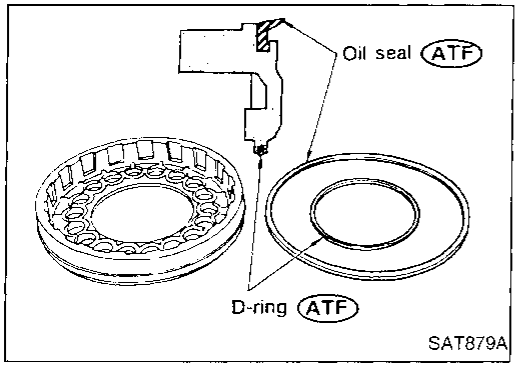

2. Install oil seal and D-ring onto piston.
- **Apply ATF to oil seal and D-ring.**

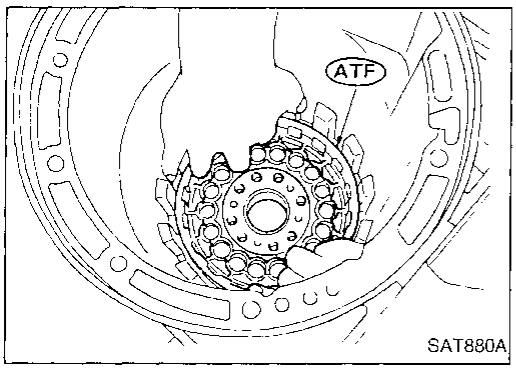

3. Install piston by rotating it slowly and evenly.
- **Apply ATF to inner surface of transmission case.**

Low & Reverse Brake (Cont'd)

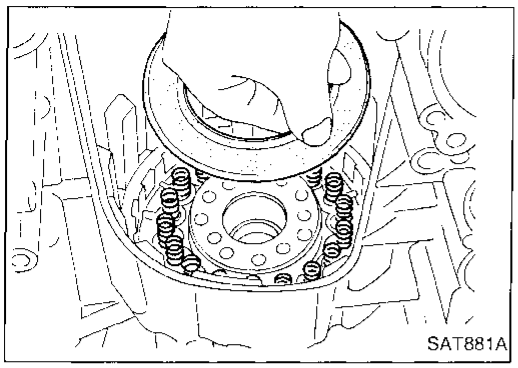

4. Install return springs, spring retainer and low one-way clutch inner race onto transmission case.
5. Install dish plate, low and reverse brake drive plates, driven plates and retaining plate.
6. Install snap ring on transmission case.

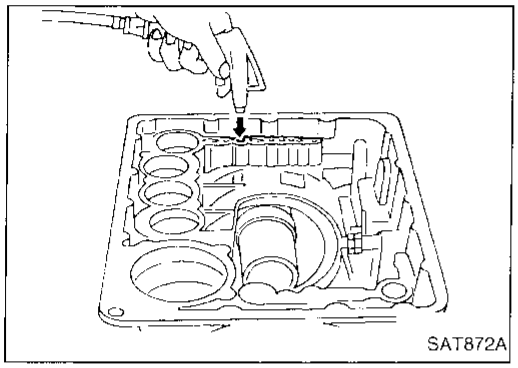

7. Check operation of low and reverse brake clutch piston. Refer to "DISASSEMBLY", AT-180.

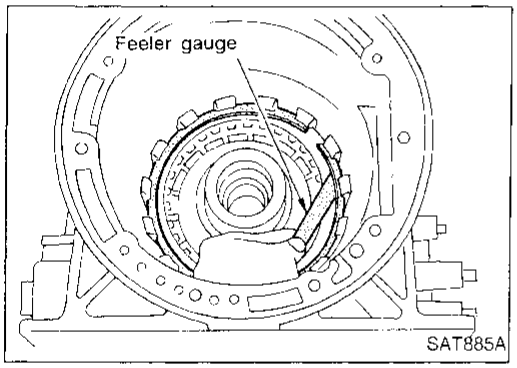

8. Measure clearance between retaining plate and snap ring. If not within allowable limit, select proper retaining plate.
   Specified clearance:
   Standard
   0.7 - 1.1 mm (0.028 - 0.043 in)
   Allowable limit
   2.3 mm (0.091 in)
   Retaining plate:
   Refer to SDS, AT-216.

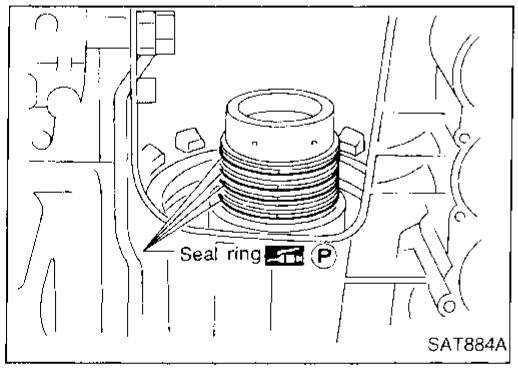

9. Install low one-way clutch inner race seal ring.
- **Apply petroleum jelly to seal ring.**
- **Make sure seal rings are pressed firmly into place and held by petroleum jelly.**

Forward Clutch Drum Assembly

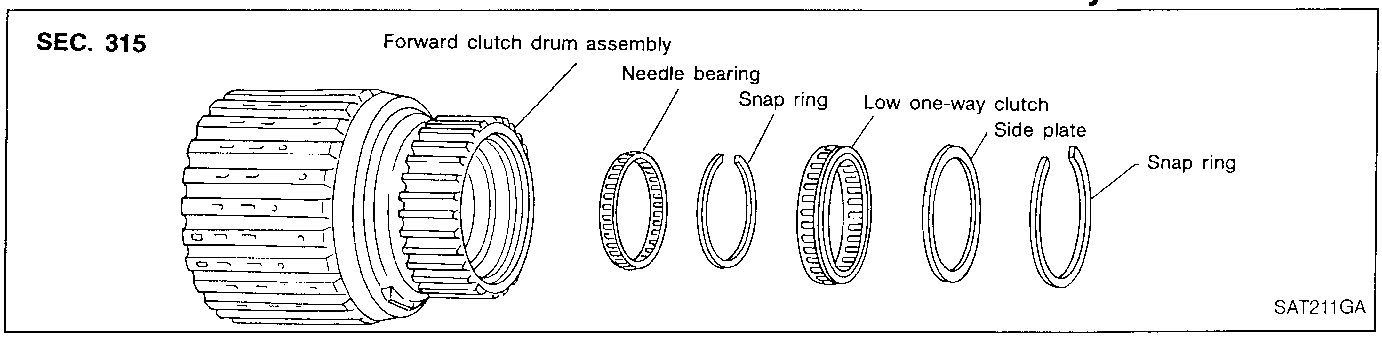

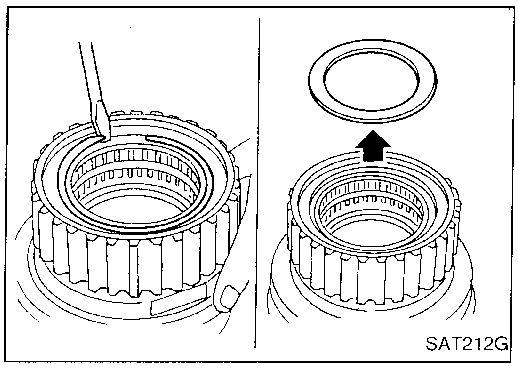

DISASSEMBLY

1. Remove snap ring from forward clutch drum.
2. Remove side plate from forward clutch drum.

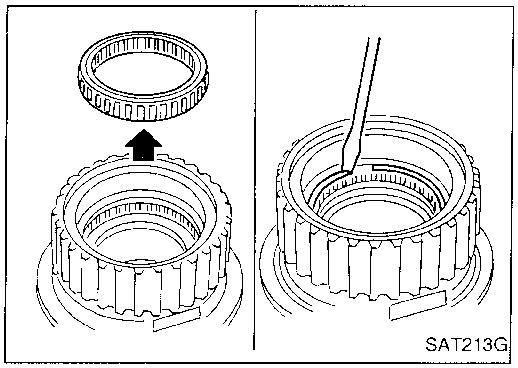

3. Remove low one-way clutch from forward clutch drum.
4. Remove snap ring from forward clutch drum.

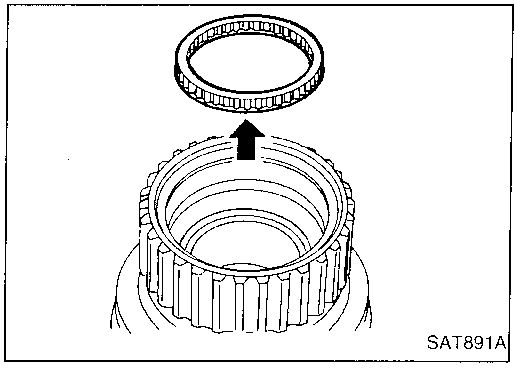

5. Remove needle bearing from forward clutch drum.

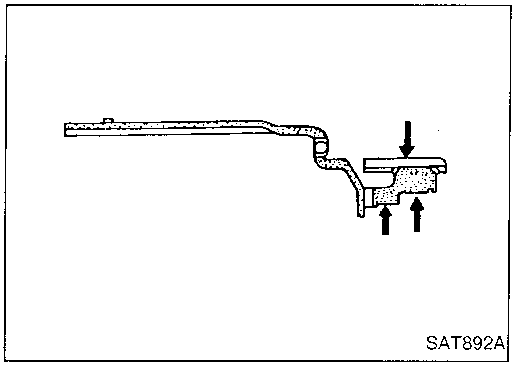

INSPECTION

Forward clutch drum

- Check spline portion for wear or damage.
- Check frictional surfaces of low one-way clutch and needle bearing for wear or damage.

Forward Clutch Drum Assembly (Cont'd)

Needle bearing and low one-way clutch

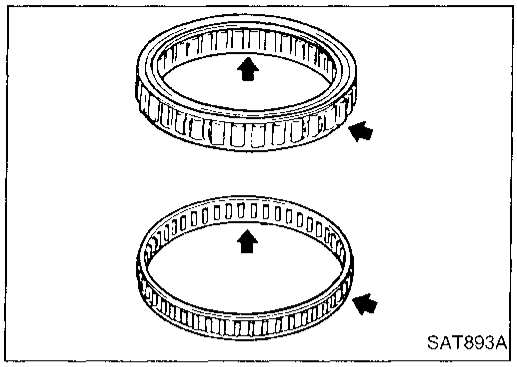
SAT893A

- Check frictional surface for wear or damage.

ASSEMBLY

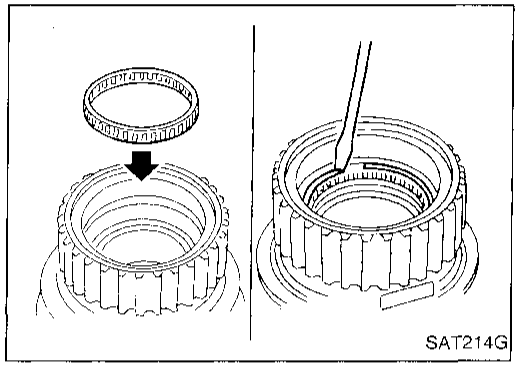
SAT214G

1. Install needle bearing in forward clutch drum.
2. Install snap ring onto forward clutch drum.

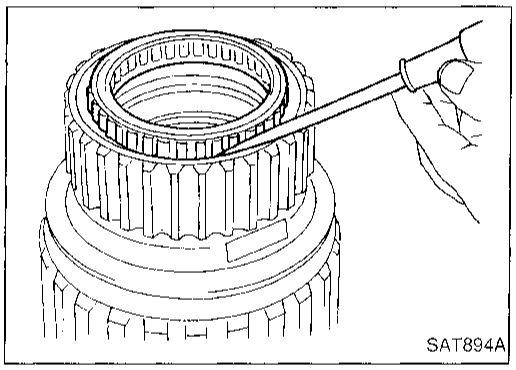
SAT894A

3. Install low one-way clutch onto forward clutch drum by pushing the roller in evenly.

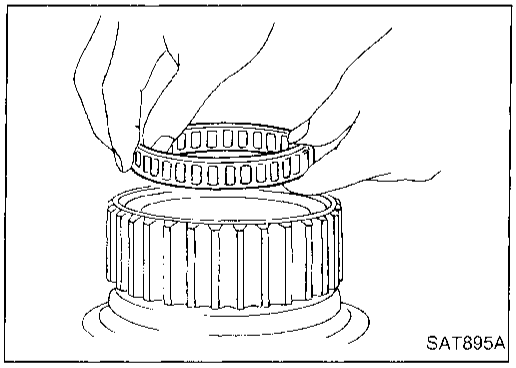
SAT895A

- **Install low one-way clutch with flange facing rearward.**

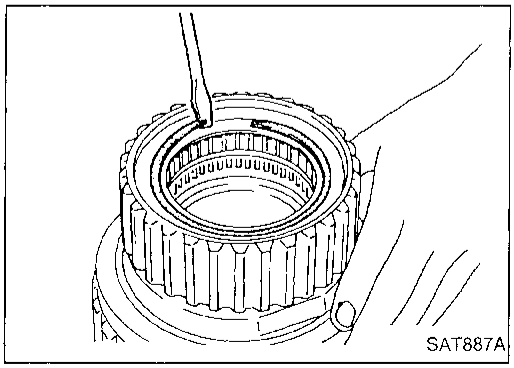
SAT887A

4. Install side plate onto forward clutch drum.
5. Install snap ring onto forward clutch drum.

Rear Internal Gear and Forward Clutch Hub

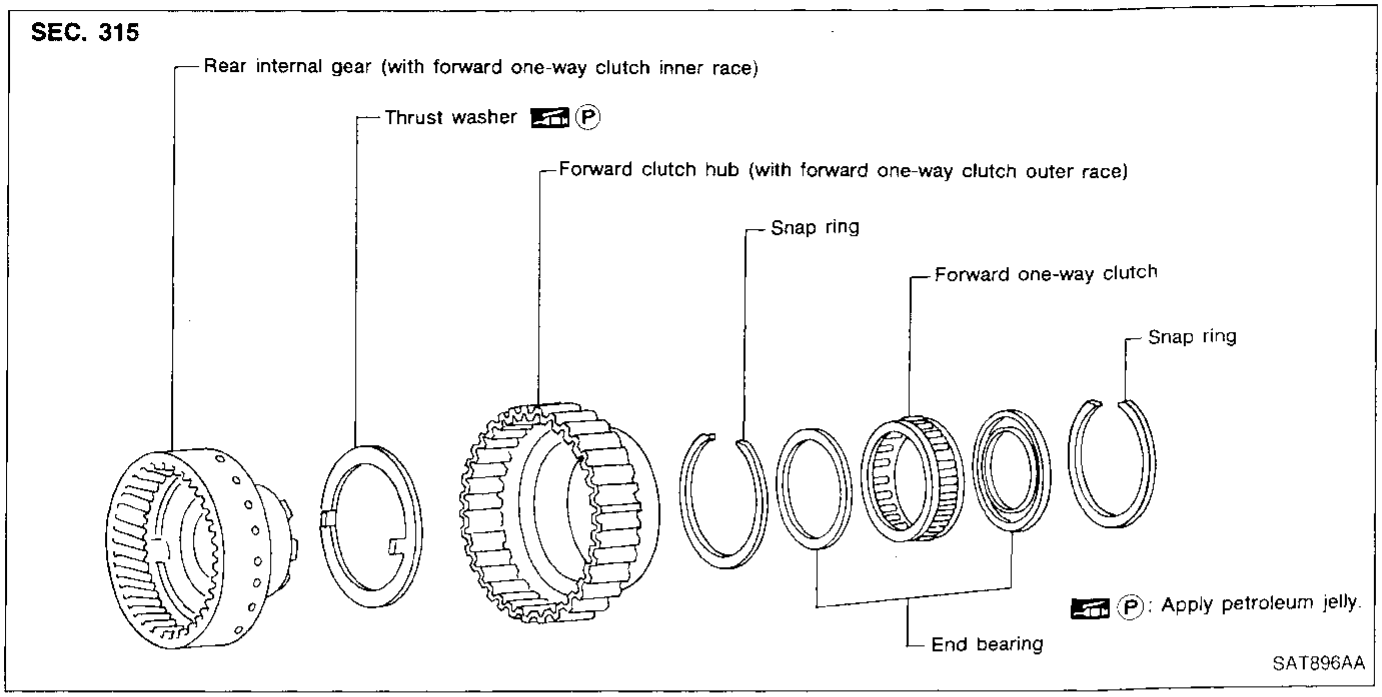

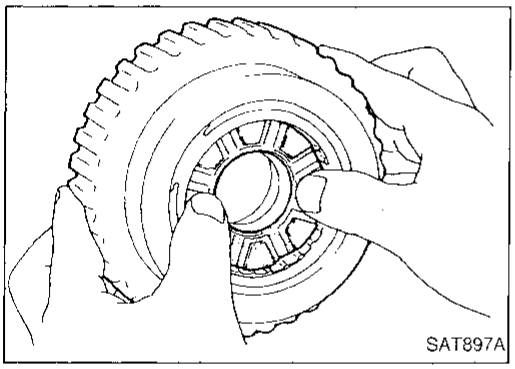

DISASSEMBLY

1. Remove rear internal gear by pushing forward clutch hub forward.

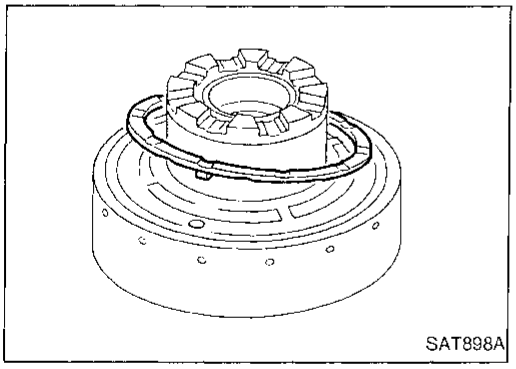

2. Remove thrust washer from rear internal gear.

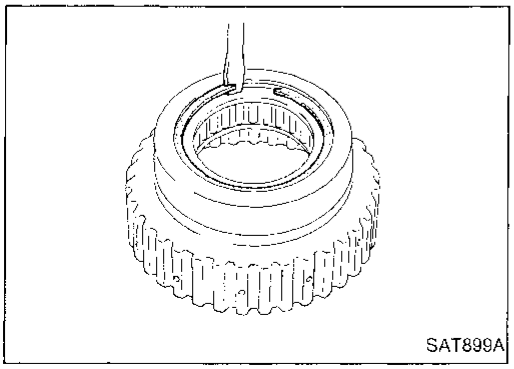

3. Remove snap ring from forward clutch hub.

Rear Internal Gear and Forward Clutch Hub (Cont'd)

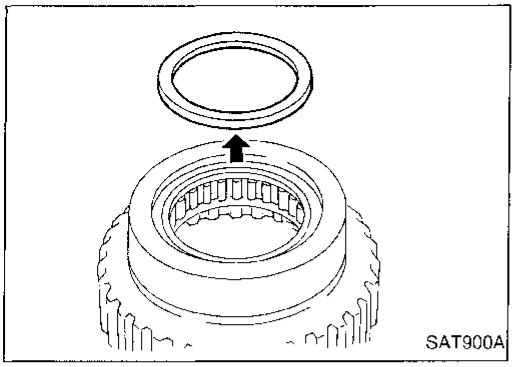

4. Remove end bearing.

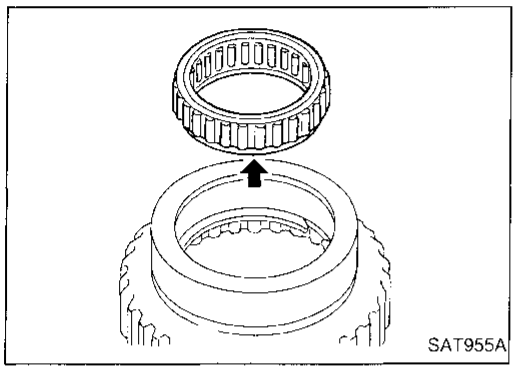

5. Remove forward one-way clutch and end bearing as a unit from forward clutch hub.

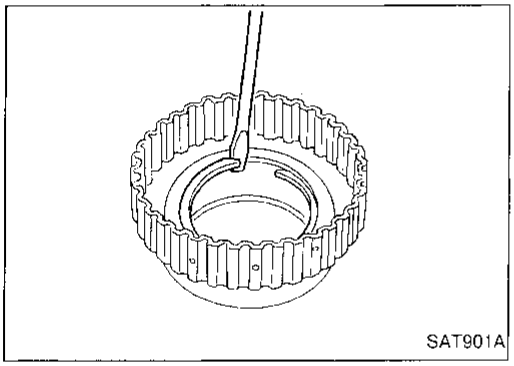

6. Remove snap ring from forward clutch hub.

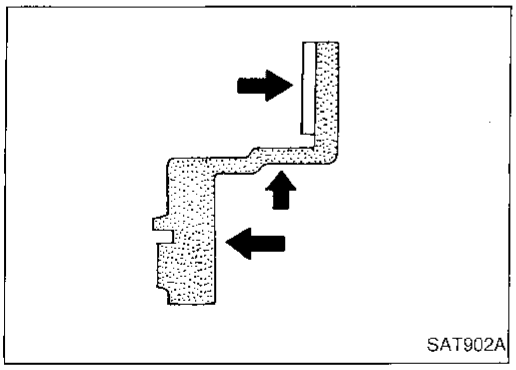

INSPECTION

Rear internal gear and forward clutch hub

- Check gear for excessive wear, chips or cracks.
- Check frictional surfaces of forward one-way clutch and thrust washer for wear or damage.
- Check spline for wear or damage.

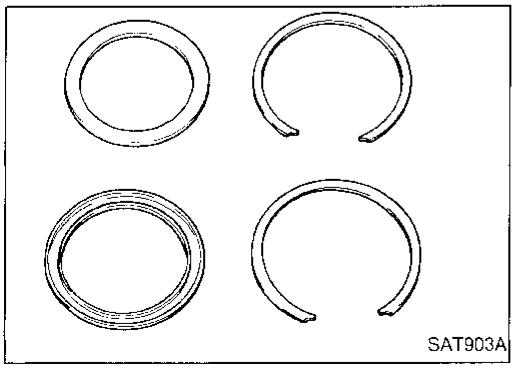

Snap ring and end bearing

- Check for deformation or damage.

Rear Internal Gear and Forward Clutch Hub (Cont'd)

ASSEMBLY

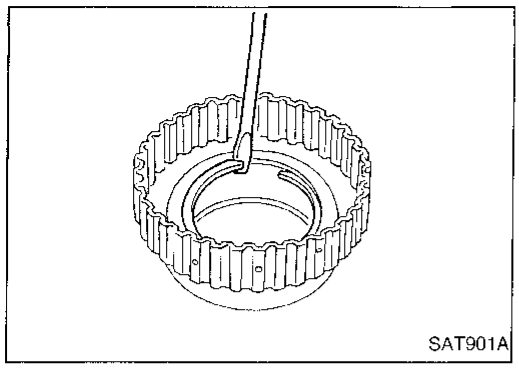

1. Install snap ring onto forward clutch hub.
2. Install end bearing.

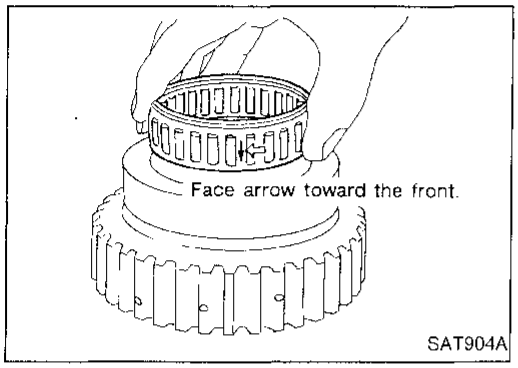

3. Install forward one-way clutch onto clutch hub.
- **Install forward one-way clutch with flange facing rearward.**
4. Install end bearing.
5. Install snap ring onto forward clutch hub.

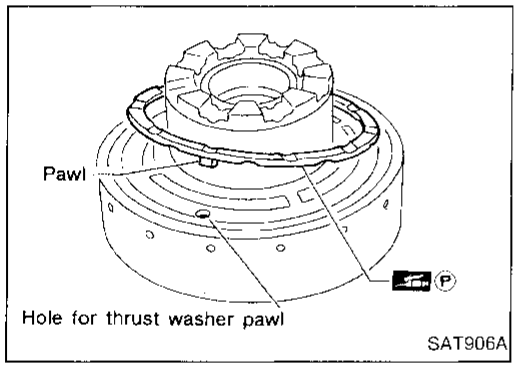

6. Install thrust washer onto rear internal gear.
- **Apply petroleum jelly to thrust washer.**
- **Securely insert pawls of thrust washer into holes in rear internal gear.**

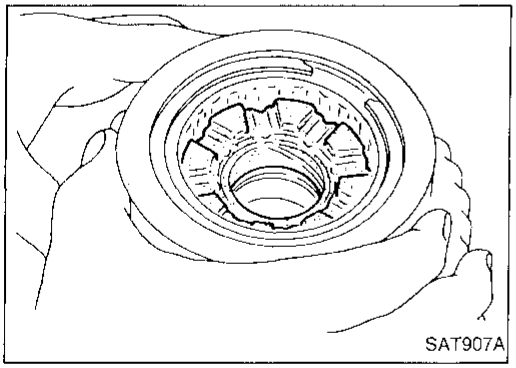

7. Position forward clutch hub in rear internal gear.

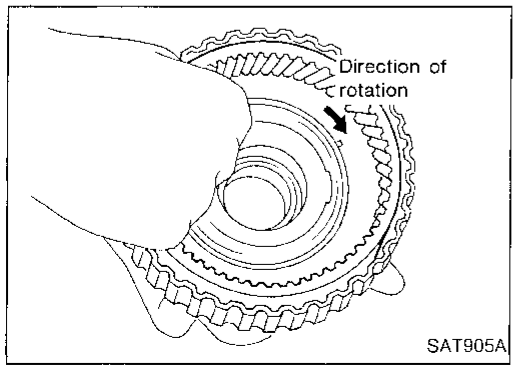

8. After installing, check to assure that forward clutch hub rotates clockwise.

Band Servo Piston Assembly

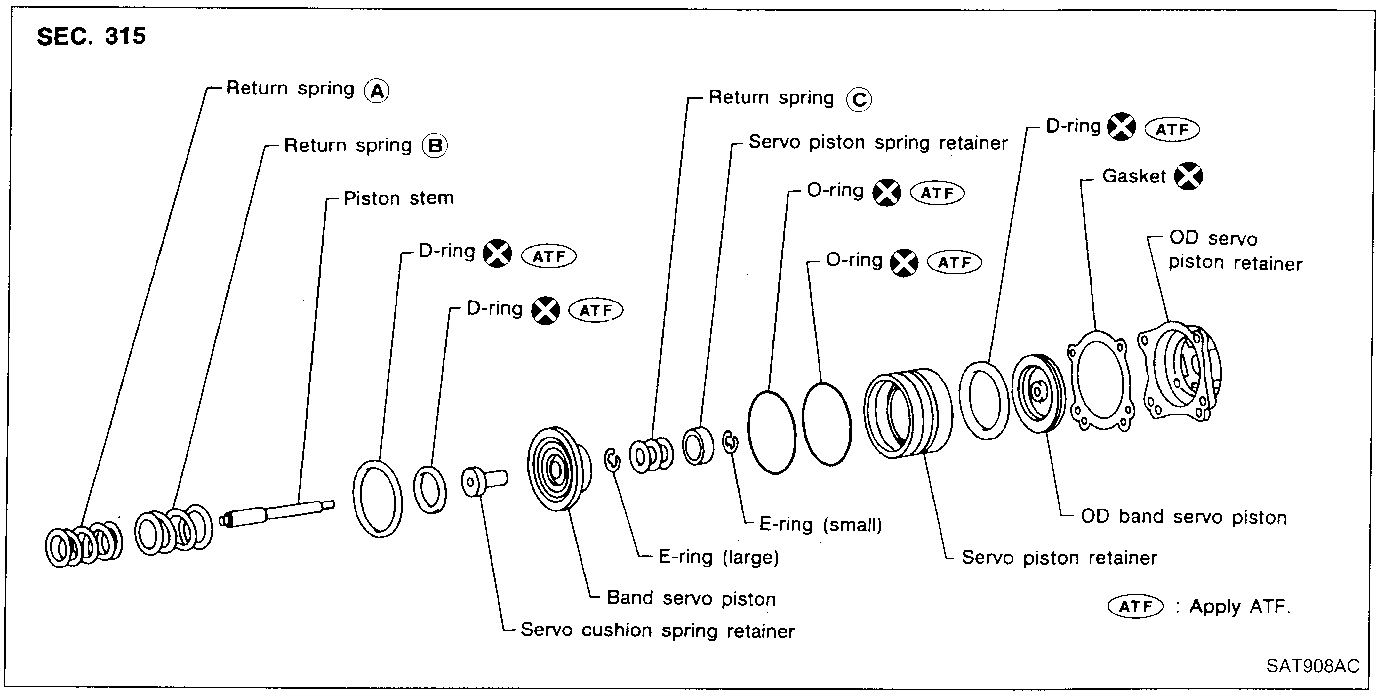

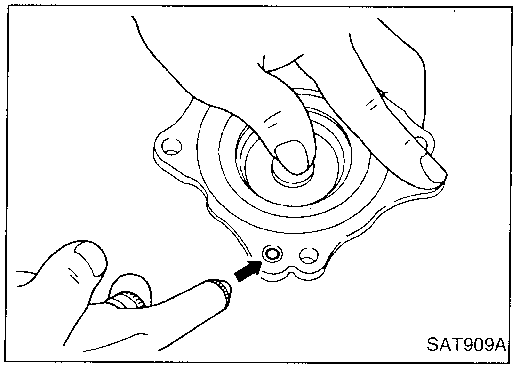

DISASSEMBLY

1. Block one oil hole in OD servo piston retainer and the center hole in OD band servo piston.
2. Apply compressed air to the other oil hole in piston retainer to remove OD band servo piston from retainer.
3. Remove D-ring from OD band servo piston.

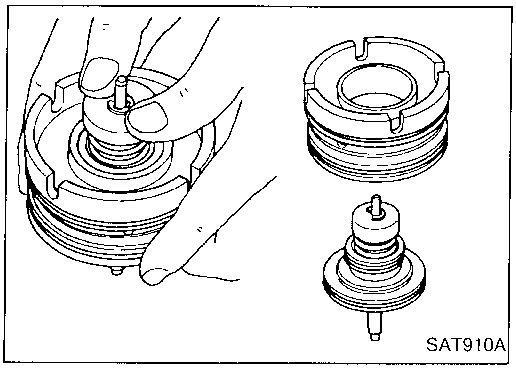

4. Remove band servo piston assembly from servo piston retainer by pushing it forward.

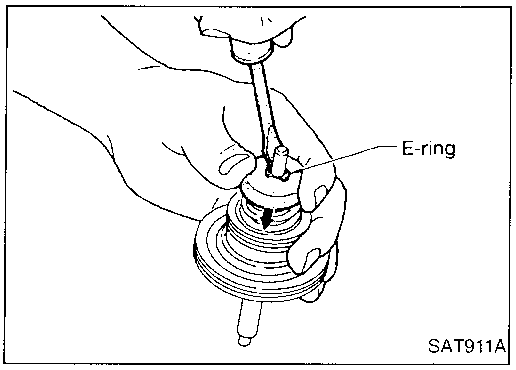

5. Place piston stem end on a wooden block. While pushing servo piston spring retainer down, remove E-ring.

Band Servo Piston Assembly (Cont'd)

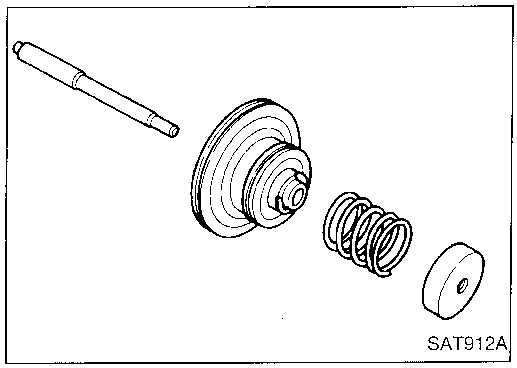

6. Remove servo piston spring retainer, return spring C and piston stem from band servo piston.

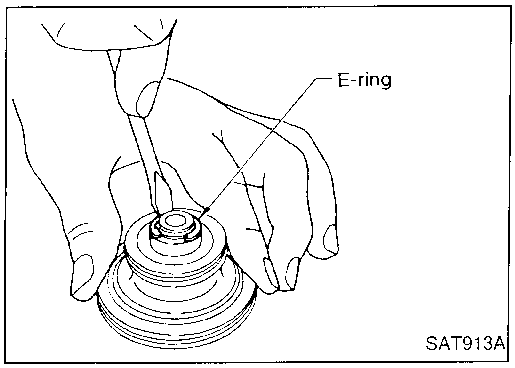

7. Remove E-ring from band servo piston.

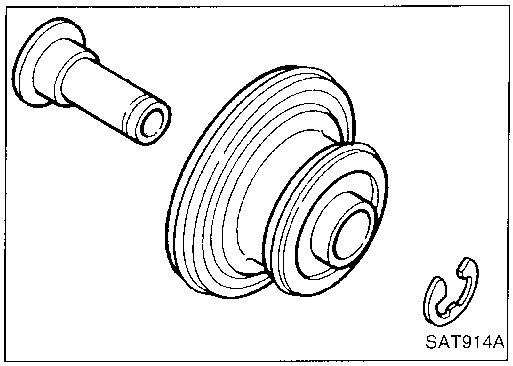

8. Remove servo cushion spring retainer from band servo piston.
9. Remove D-rings from band servo piston.
10. Remove O-rings from servo piston retainer.

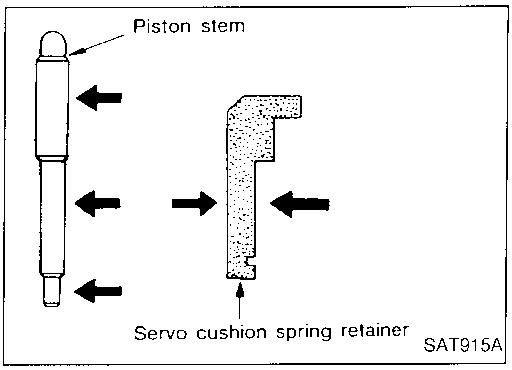

INSPECTION

Pistons, retainers and piston stem

- Check frictional surfaces for abnormal wear or damage.

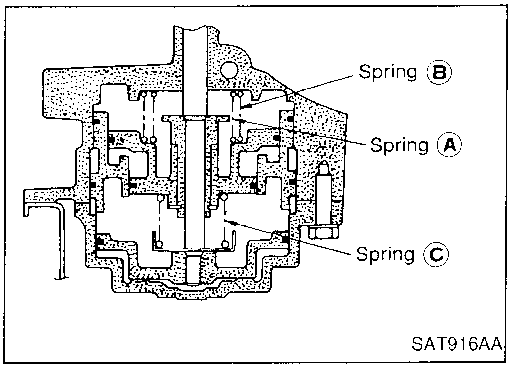

Return springs

- Check for deformation or damage. Measure free length and outer diameter.

  Inspection standard:

  Refer to SDS, AT-215.

Band Servo Piston Assembly (Cont'd)

ASSEMBLY

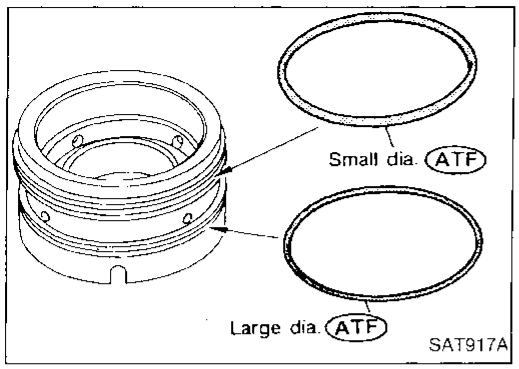

1. Install O-rings onto servo piston retainer.
- **Apply ATF to O-rings.**
- **Pay attention to position of each O-ring.**

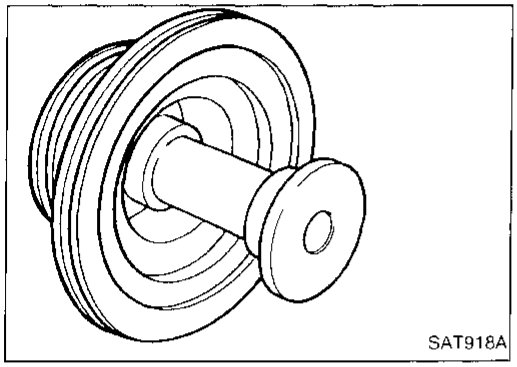

2. Install servo cushion spring retainer onto band servo piston.

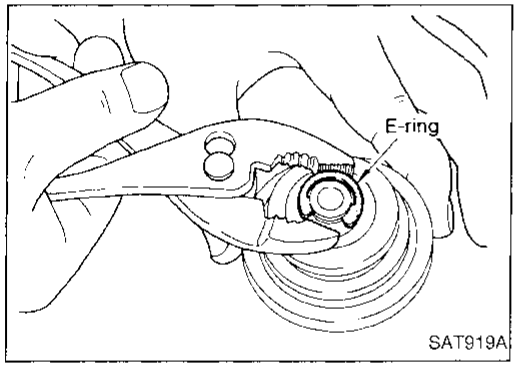

3. Install E-ring onto servo cushion spring retainer.

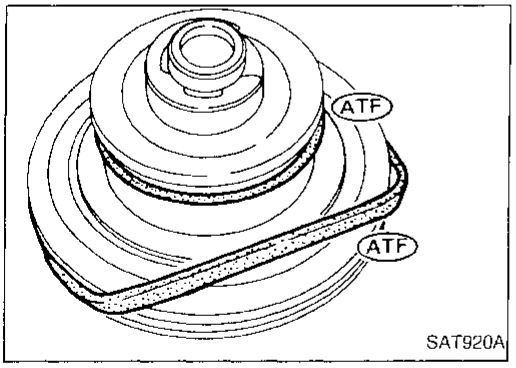

4. Install D-rings onto band servo piston.
- **Apply ATF to D-rings.**

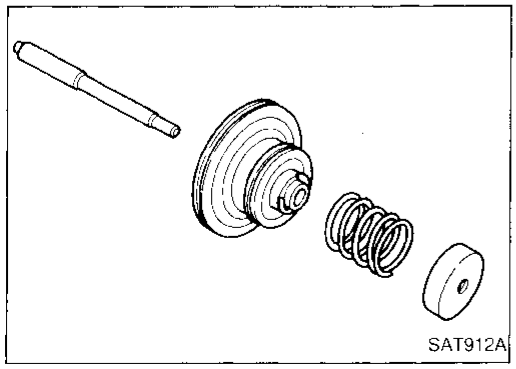

5. Install servo piston spring retainer, return spring C and piston stem onto band servo piston.

Band Servo Piston Assembly (Cont'd)

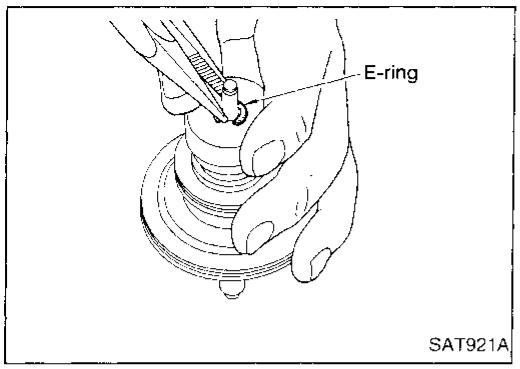

6. Place piston stem end on a wooden block. While pushing servo piston spring retainer down, install E-ring.

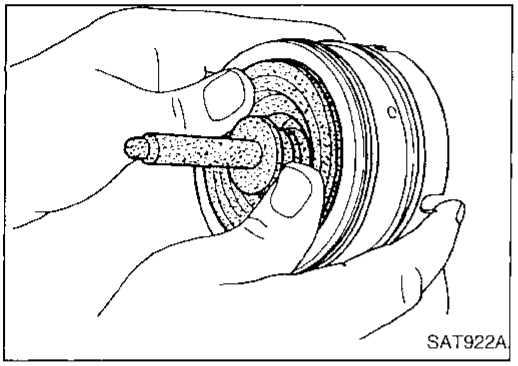

7. Install band servo piston assembly onto servo piston retainer by pushing it inward.

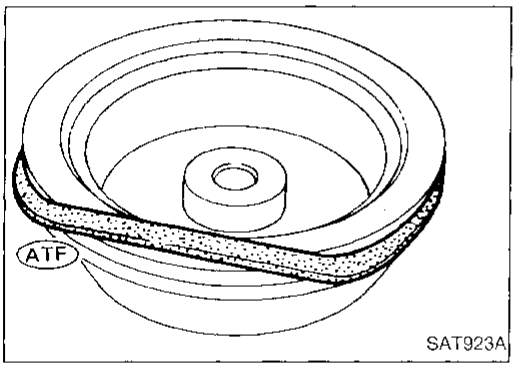

8. Install D-ring on OD band servo piston.
- **Apply ATF to D-ring.**

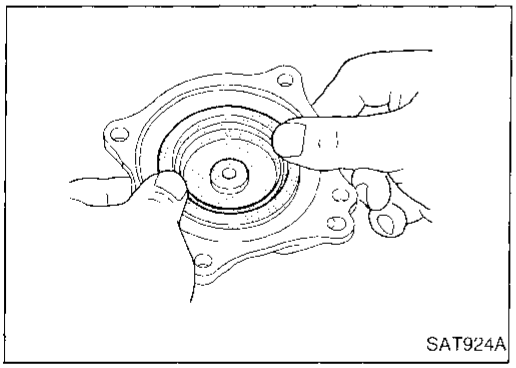

9. Install OD band servo piston onto servo piston retainer by pushing it inward.

Parking Pawl Components

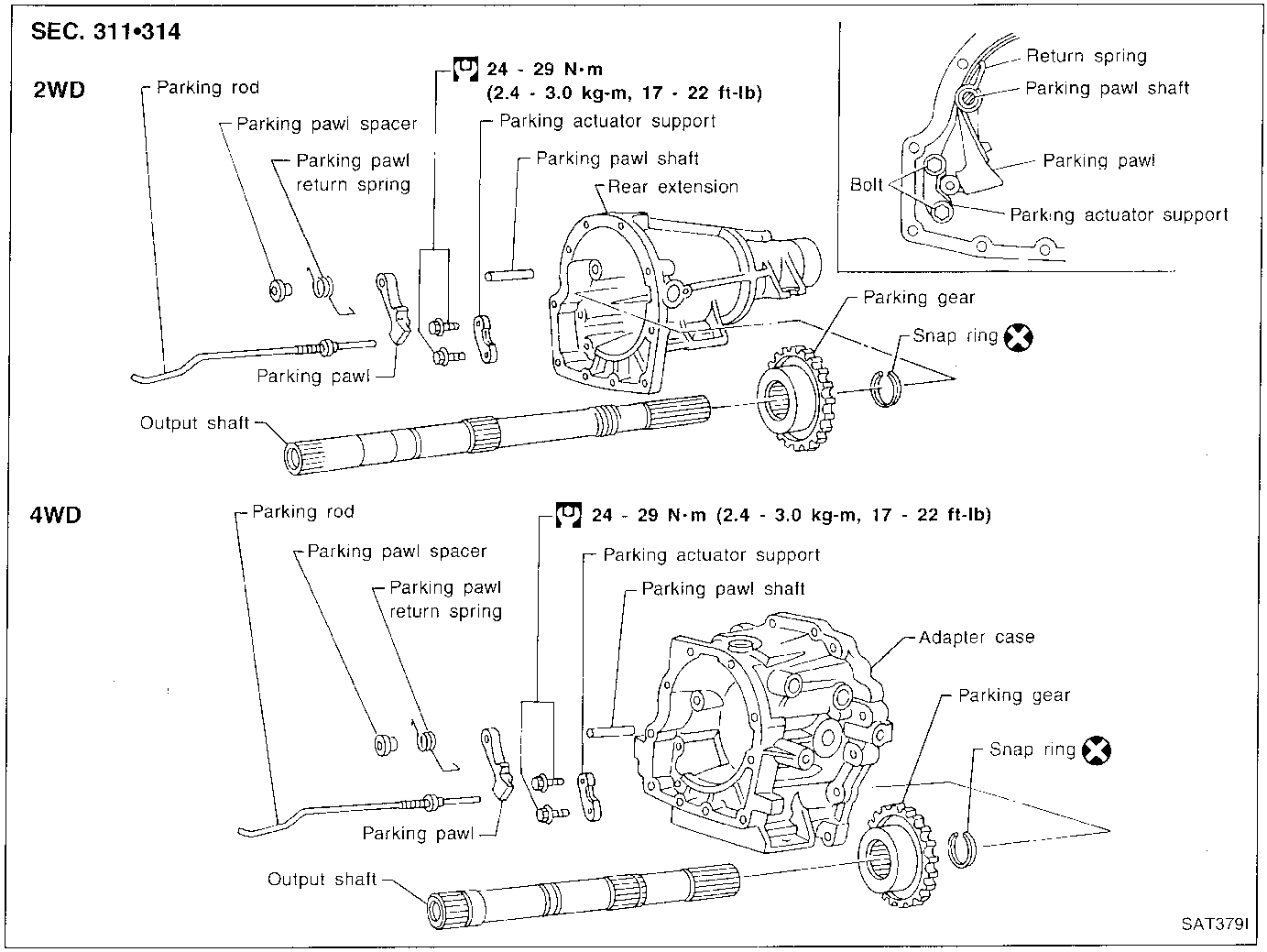

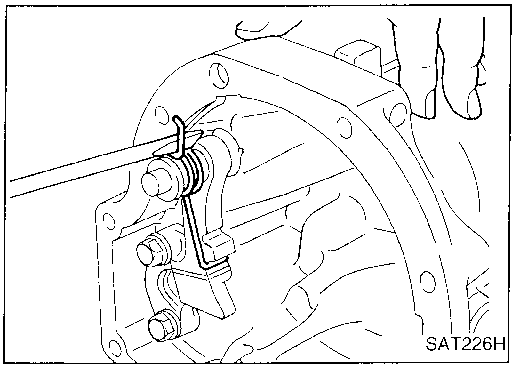

DISASSEMBLY

1. Slide return spring to the front of rear extension case flange or adapter case flange.
2. Remove return spring, pawl spacer and parking pawl from rear extension or adapter case.
3. Remove parking pawl shaft from rear extension or adapter case.

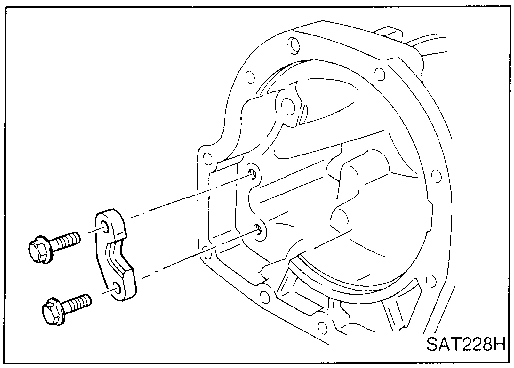

4. Remove parking actuator support from rear extension or adapter case.

Parking Pawl Components (Cont'd)

ASSEMBLY

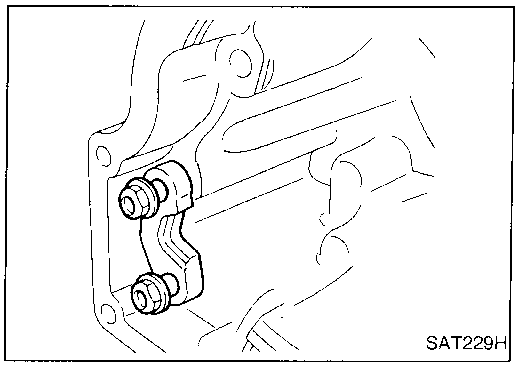

1. Install parking actuator support onto rear extension or adapter case.
2. Insert parking pawl shaft into rear extension or adapter case.
3. Install return spring, pawl spacer and parking pawl onto parking pawl shaft.

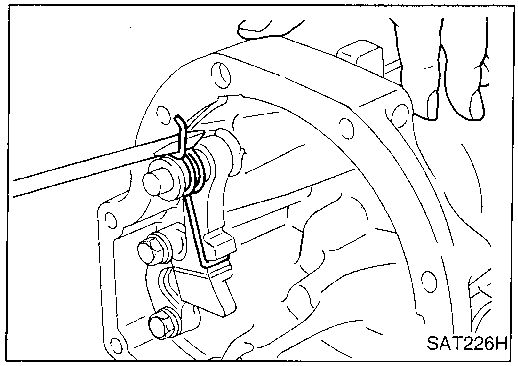

4. Bend return spring upward and install it onto rear extension or adapter case.

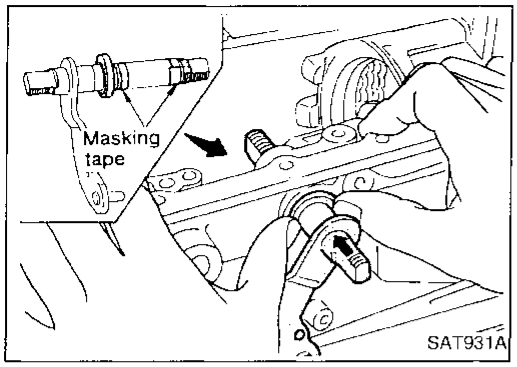

Assembly (1)

1. Install manual shaft components.
a. Install oil seal onto manual shaft.
- **Apply ATF to oil seal.**
- **Wrap threads of manual shaft with masking tape.**

b. Insert manual shaft and oil seal as a unit into transmission case.
c. Remove masking tape.

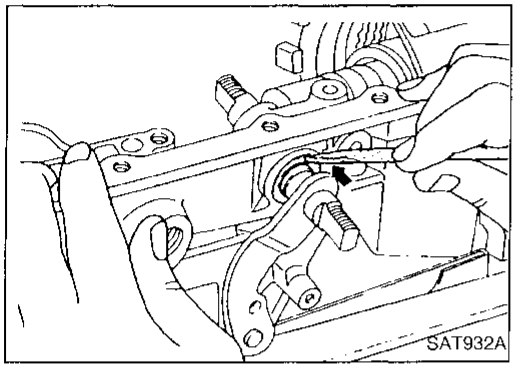

d. Push oil seal evenly and install it onto transmission case.

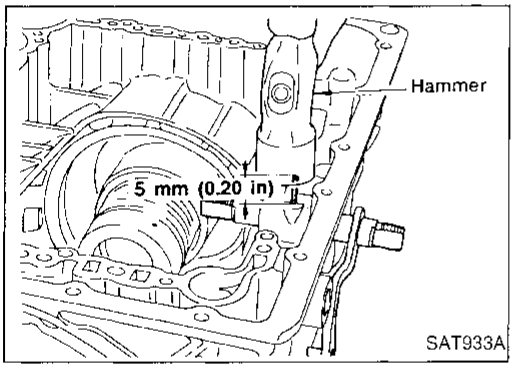

e. Align groove in shaft with drive pin hole, then drive pin into position as shown in figure at left.

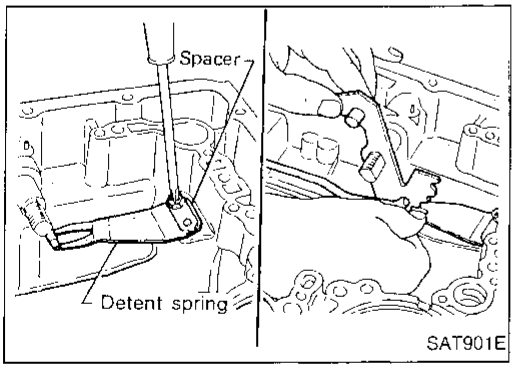

f. Install detent spring and spacer.
g. While pushing detent spring down, install manual plate onto manual shaft.

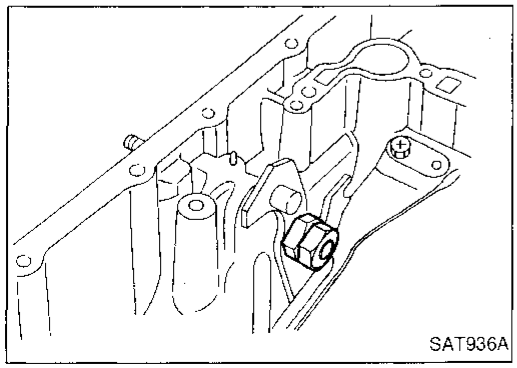

h. Install lock nuts onto manual shaft.

Assembly (1) (Cont'd)

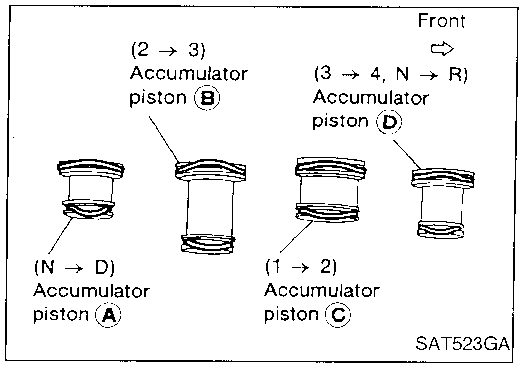

2. Install accumulator piston.
a. Install O-rings onto accumulator piston.
- **Apply ATF to O-rings.**

Accumulator piston O-rings

Unit: mm (in)

Accumulator	Ⓐ	Ⓑ	Ⓒ	Ⓓ
Small diameter end	29 (1.14)	32 (1.26)	45 (1.77)	29 (1.14)
Large diameter end	45 (1.77)	50 (1.97)	50 (1.97)	45 (1.77)

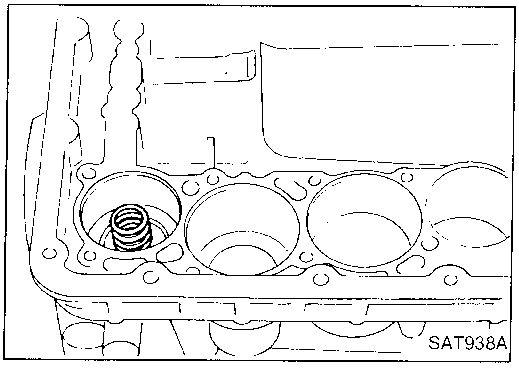

b. Install return spring for accumulator A onto transmission case.
Free length of return spring:
Refer to SDS, AT-215.

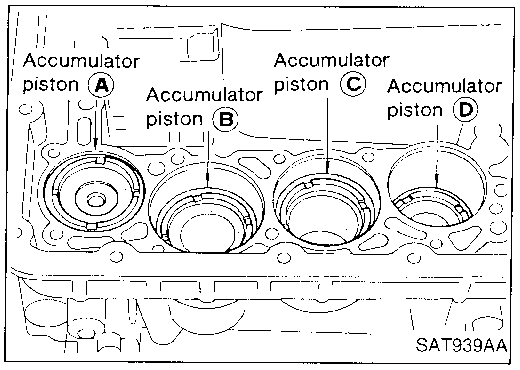

c. Install accumulator pistons Ⓐ, Ⓑ, Ⓒ and Ⓓ.
- **Apply ATF to transmission case.**

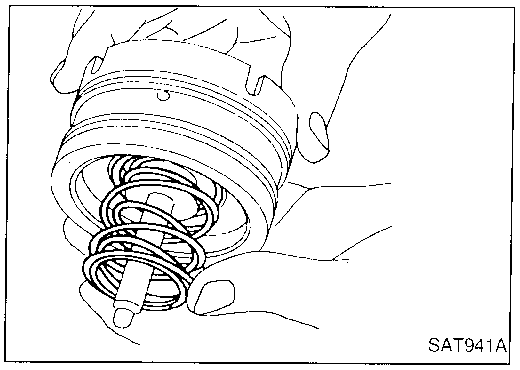

3. Install band servo piston.
a. Install return springs onto servo piston.

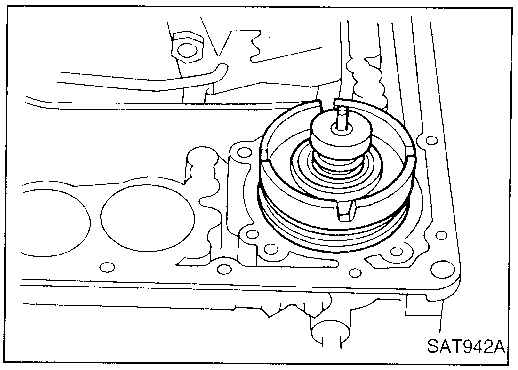

b. Install band servo piston onto transmission case.
- **Apply ATF to O-ring of band servo piston and transmission case.**

c. Install gasket for band servo onto transmission case.

Assembly (1) (Cont'd)

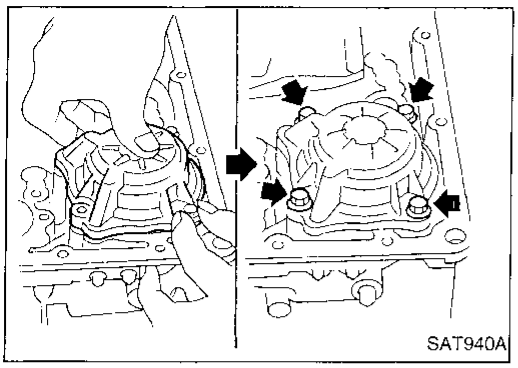

d. Install band servo retainer onto transmission case.

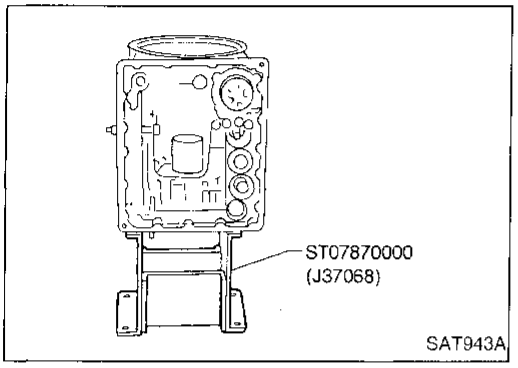

4. Install rear side clutch and gear components.
a. Place transmission case in vertical position.

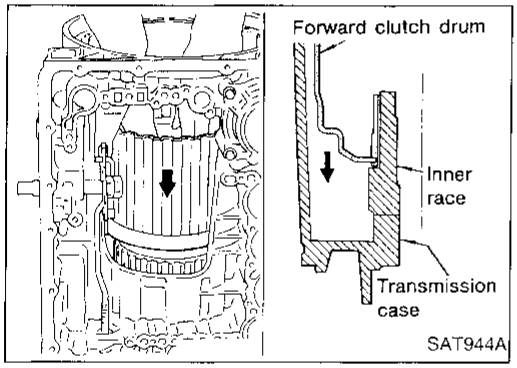

b. Slightly lift forward clutch drum assembly. Then slowly rotate it clockwise until its hub passes fully over clutch inner race inside transmission case.

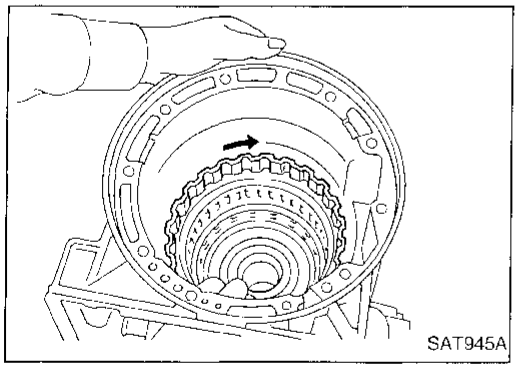

c. Check to be sure that rotation direction of forward clutch assembly is correct.

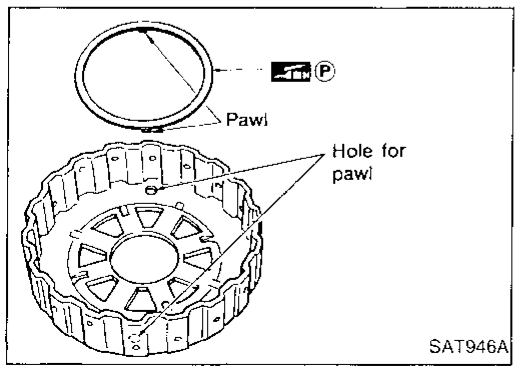

d. Install thrust washer onto front of overrun clutch hub.

- **Apply petroleum jelly to the thrust washer.**
- **Insert pawls of thrust washer securely into holes in overrun clutch hub.**

Assembly (1) (Cont'd)

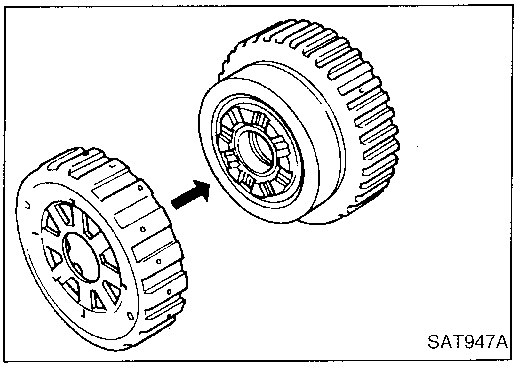

e. Install overrun clutch hub onto rear internal gear assembly.

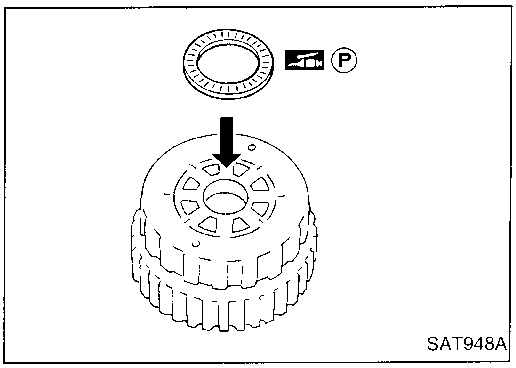

f. Install needle bearing onto rear of overrun clutch hub.

- **Apply petroleum jelly to needle bearing.**

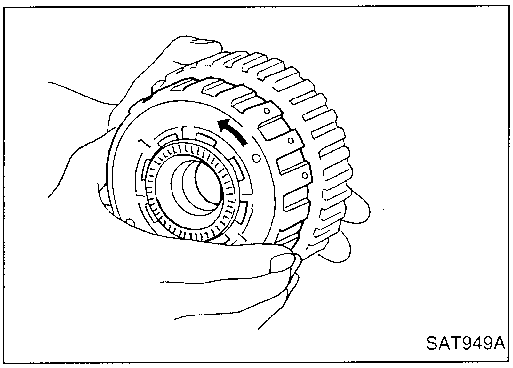

g. Check that overrun clutch hub rotates as shown while holding forward clutch hub.

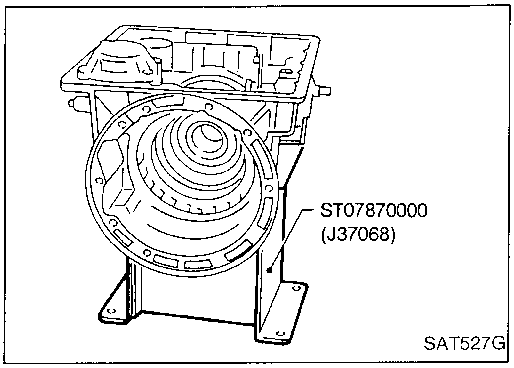

h. Place transmission case into horizontal position.

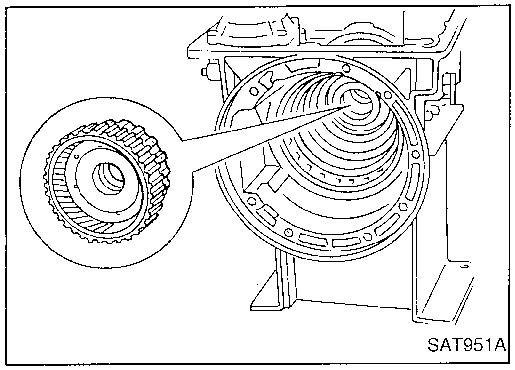

i. Install rear internal gear, forward clutch hub and overrun clutch hub as a unit onto transmission case.

Assembly (1) (Cont'd)

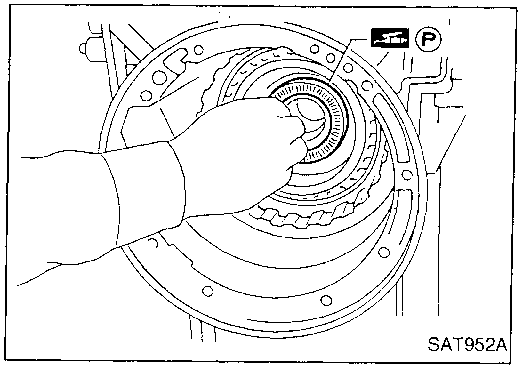

j. Install needle bearing onto rear internal gear.

- **Apply petroleum jelly to needle bearing.**

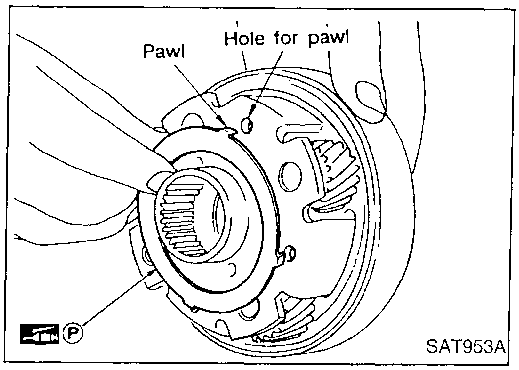

k. Install bearing race onto rear of front internal gear.

- **Apply petroleum jelly to bearing race.**
- **Securely engage pawls of bearing race with holes in front internal gear.**

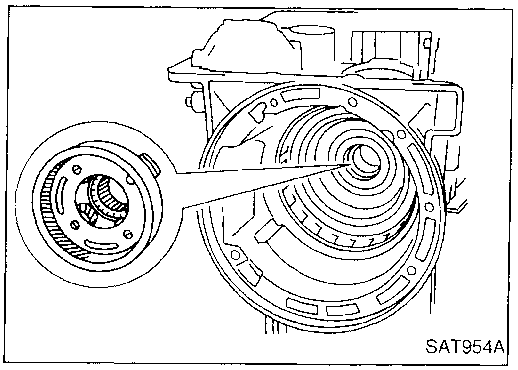

l. Install front internal gear on transmission case.

Adjustment

When any parts listed in the following table are replaced, total end play or reverse clutch end play must be adjusted.

Part name	Total end play	Reverse clutch end play
Transmission case	•	•
Low one-way clutch inner race	•	•
Overrun clutch hub	•	•
Rear internal gear	•	•
Rear planetary carrier	•	•
Rear sun gear	•	•
Front planetary carrier	•	•
Front sun gear	•	•
High clutch hub	•	•
High clutch drum	•	•
Oil pump cover	•	•
Reverse clutch drum	—	•

Adjustment (Cont'd)

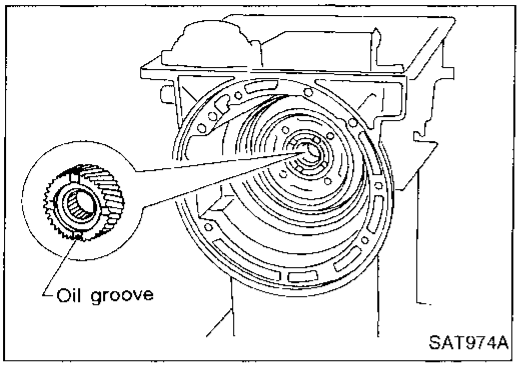

1. Install front side clutch and gear components.

a. Install rear sun gear on transmission case.

- **Pay attention to its direction.**

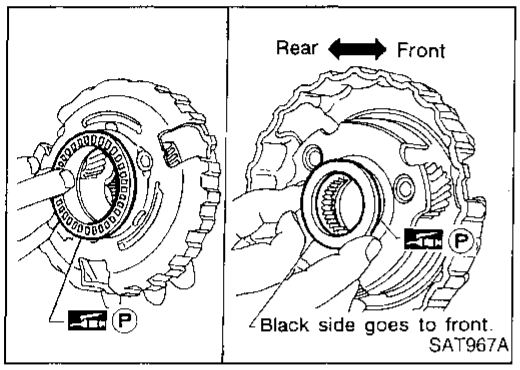

b. Install needle bearing on front of front planetary carrier.

- **Apply petroleum jelly to needle bearing.**

c. Install needle bearing on rear of front planetary carrier.

- **Apply petroleum jelly to bearing.**
- **Pay attention to its direction — Black side goes to front.**

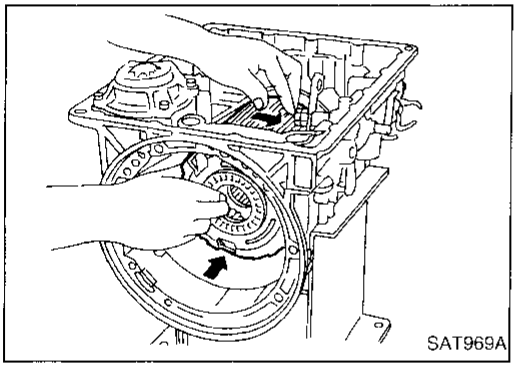

d. While rotating forward clutch drum clockwise, install front planetary carrier on forward clutch drum.

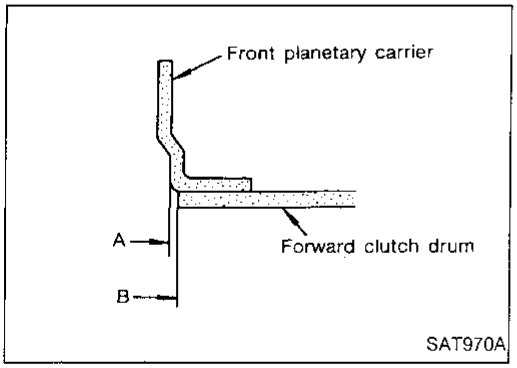

- **Check that portion A of front planetary carrier protrudes approximately 2 mm (0.08 in) beyond portion B of forward clutch assembly.**

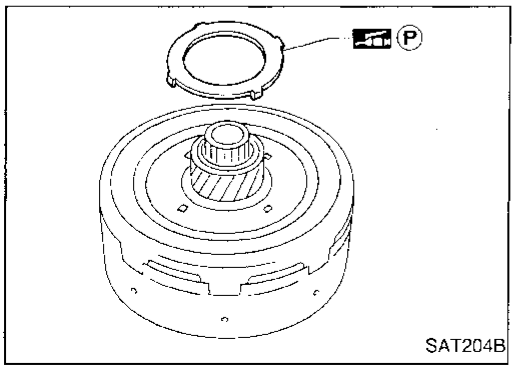

e. Install bearing races on rear of clutch pack.

- **Apply petroleum jelly to bearing races.**
- **Securely engage pawls of bearing race with hole in clutch pack.**

Adjustment (Cont'd)

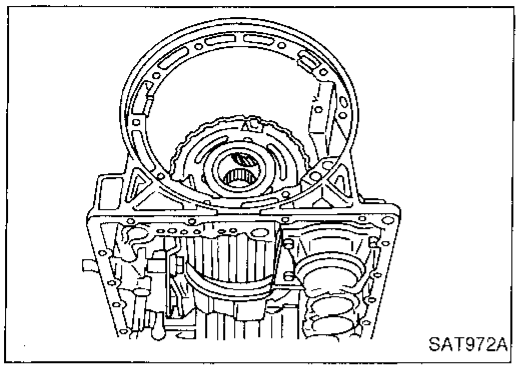

f. Place transmission case in vertical position.

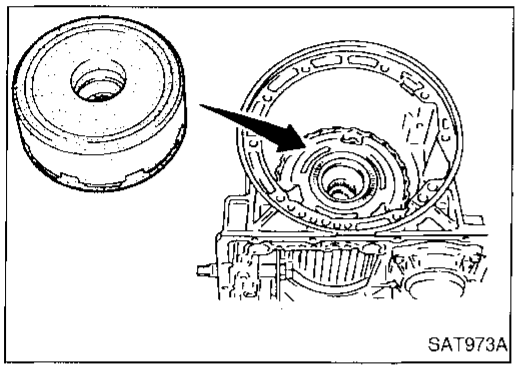

g. Install clutch pack into transmission case.

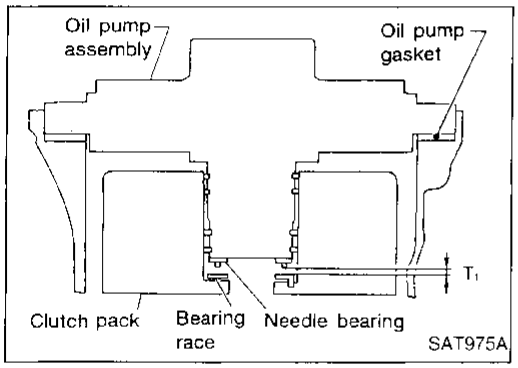

2. Adjust total end play.
   Total end play "T_1":
   0.25 - 0.55 mm (0.0098 - 0.0217 in)

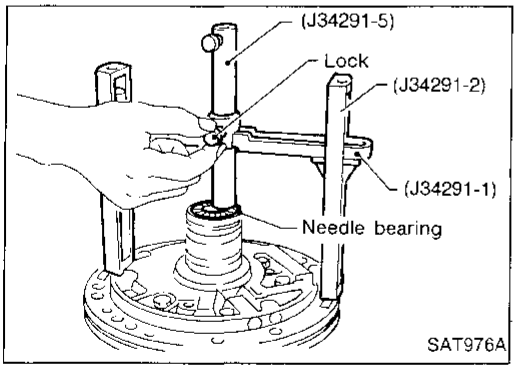

a. With needle bearing installed, place J34291-1 (bridge), J34291-2 (legs) and the J34291-5 (gauging cylinder) onto oil pump. The long ends of legs should be placed firmly on machined surface of oil pump assembly. The gauging cylinder should rest on top of the needle bearing. Lock gauging cylinder in place with set screw.

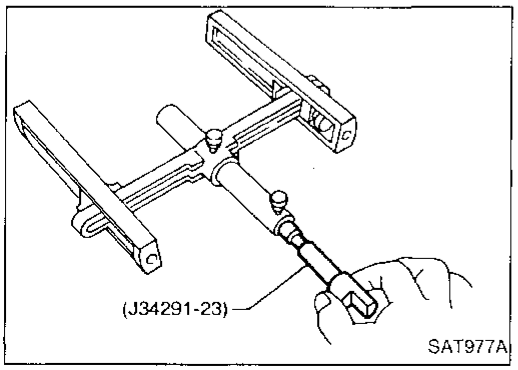

b. Install J34291-23 (gauging plunger) into gauging cylinder.

Adjustment (Cont'd)

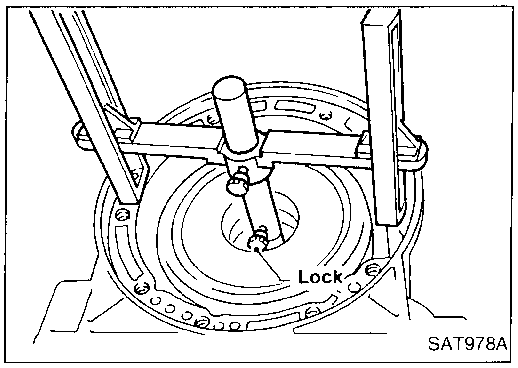

c. Install original bearing race inside reverse clutch drum. Place shim selecting gauge with its legs on machined surface of transmission case (no gasket). Allow gauging plunger to rest on bearing race. Lock gauging plunger in place with set screw.

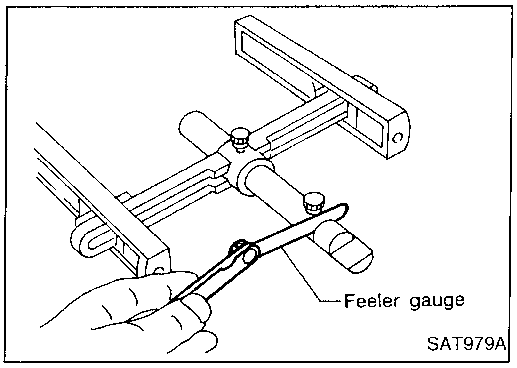

d. Remove Tool and use feeler gauge to measure gap between gauging cylinder and gauging plunger. This measurement should give exact total end play.

Total end play "T_1":
0.25 - 0.55 mm (0.0098 - 0.0217 in)

- If end play is out of specification, decrease or increase thickness of oil pump cover bearing race as necessary.

Available oil pump cover bearing race:
Refer to SDS, AT-217.

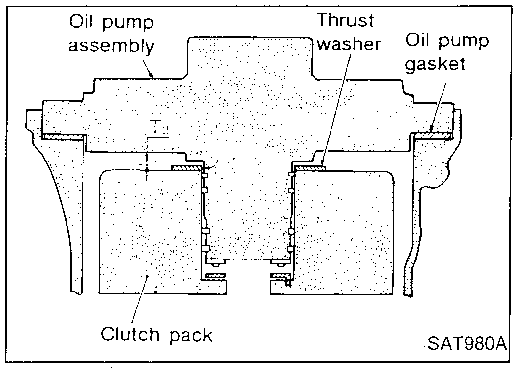

3. Adjust reverse clutch drum end play.

Reverse clutch drum end play "T_2":
0.55 - 0.90 mm (0.0217 - 0.0354 in)

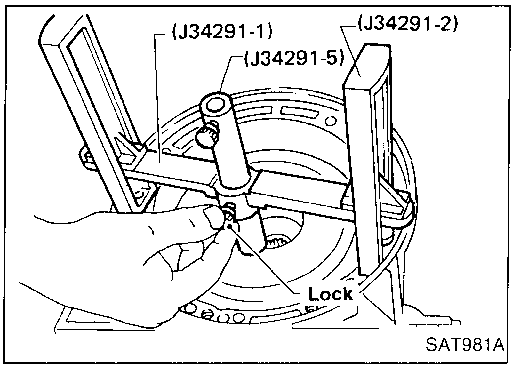

a. Place J34291-1 (bridge), J34291-2 (legs) and J34291-5 (gauging cylinder) on machined surface of transmission case (no gasket). Allow gauging cylinder to rest on front thrust surface of reverse clutch drum. Lock cylinder in place with set screw.

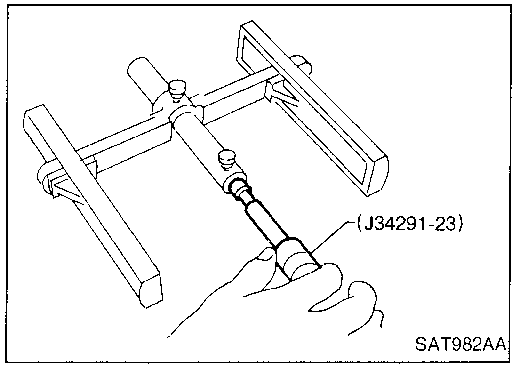

b. Install J34291-23 (gauging plunger) into gauging cylinder.

Adjustment (Cont'd)

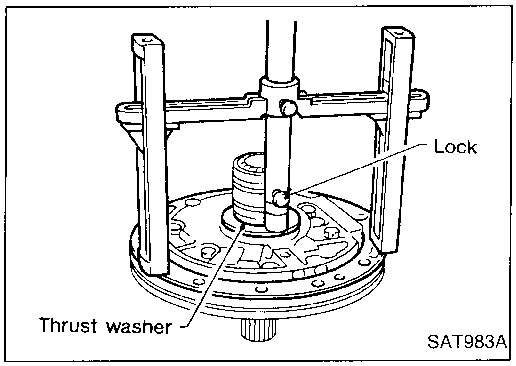

c. Install original thrust washer on oil pump. Place shim setting gauge legs onto machined surface of oil pump assembly. Allow gauging plunger to rest on thrust washer. Lock plunger in place with set screw.

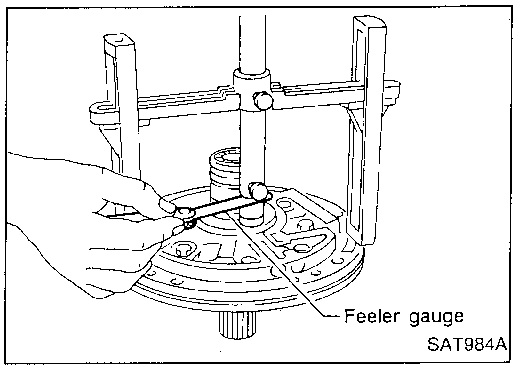

d. Use feeler gauge to measure gap between gauging plunger and gauging cylinder. This measurement should give you exact reverse clutch drum end play.

Reverse clutch drum end play "T_2":
0.55 - 0.90 mm (0.0217 - 0.0354 in)

- If end play is out of specification, decrease or increase thickness of oil pump thrust washer as necessary.

Available oil pump thrust washer:
Refer to SDS, AT-217.

Assembly (2)

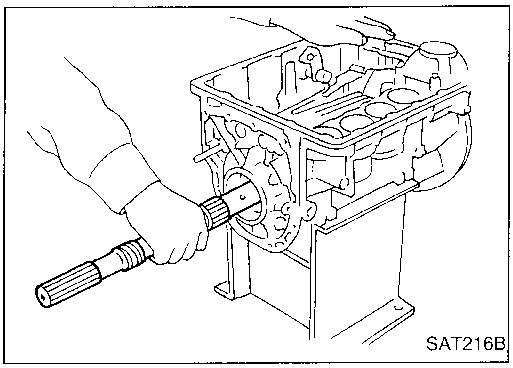

1. Install output shaft and parking gear.

a. Insert output shaft from rear of transmission case while slightly lifting front internal gear.

- **Do not force output shaft against front of transmission case.**

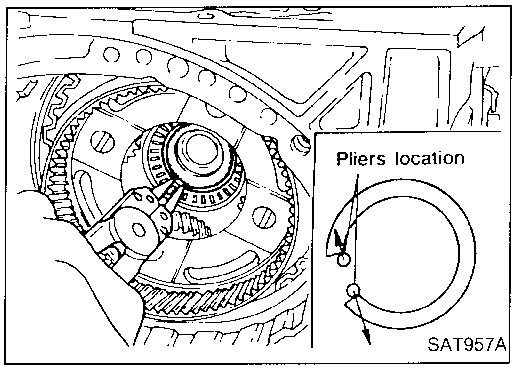

b. Carefully push output shaft against front of transmission case. Install snap ring on front of output shaft.

- **Check to be sure output shaft cannot be removed in rear direction.**

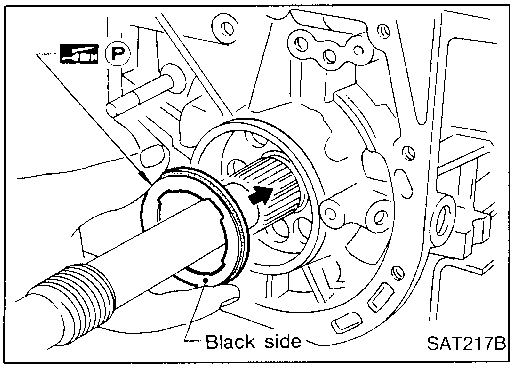

c. Install needle bearing on transmission case.

- **Pay attention to its direction — Black side goes to rear.**
- **Apply petroleum jelly to needle bearing.**

Assembly (2) (Cont'd)

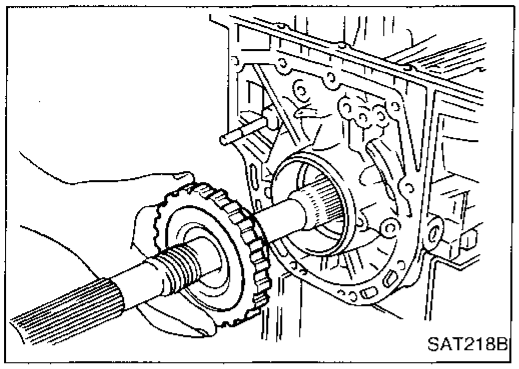

d. Install parking gear on transmission case.

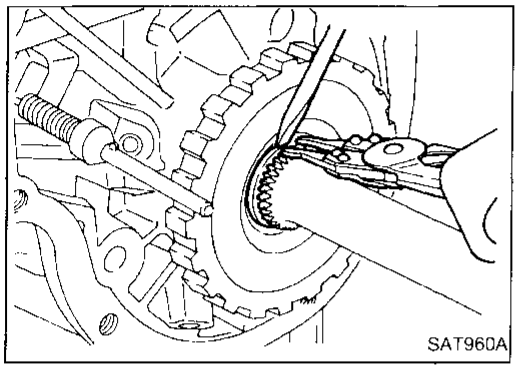

e. Install snap ring on rear of output shaft.

- **Check to be sure output shaft cannot be removed in forward direction.**

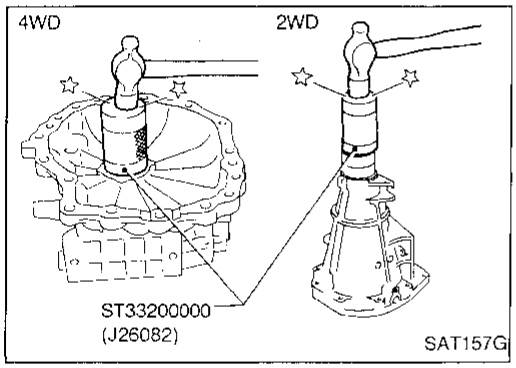

2. Install rear extension or adapter case.

a. Install oil seal on rear extension or adapter case.

- **Apply ATF to oil seal.**

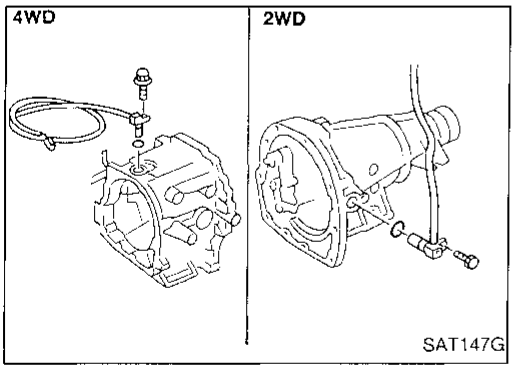

b. Install O-ring on revolution sensor.

- **Apply ATF to O-ring.**

c. Install revolution sensor on rear extension or adapter case.

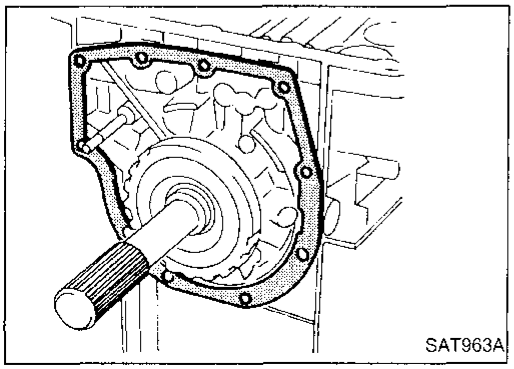

d. Install rear extension gasket on transmission case.

Assembly (2) (Cont'd)

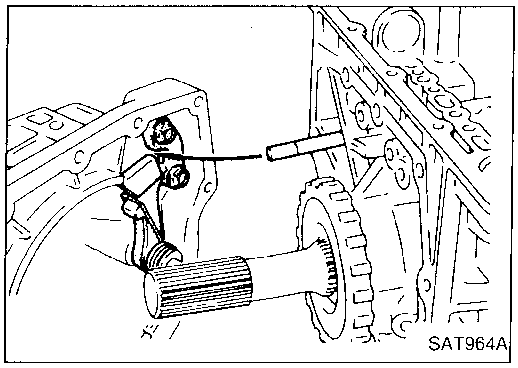

e. Install parking rod on transmission case.

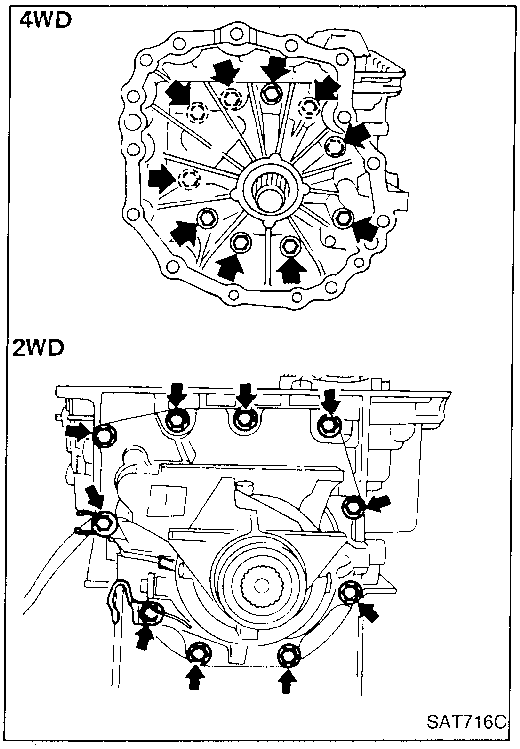

f. Install rear extension or adapter case on transmission case.

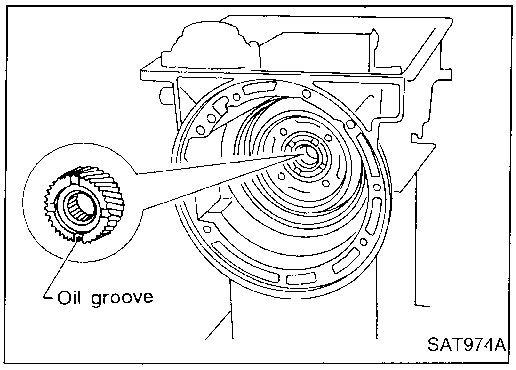

3. Install front side clutch and gear components.
a. Install rear sun gear on transmission case.
- **Pay attention to its direction.**

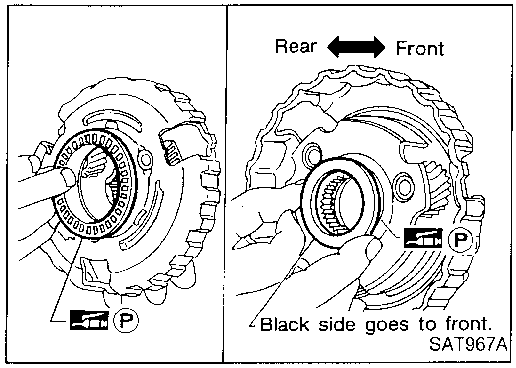

b. Make sure needle bearing is on front of front planetary carrier.
- **Apply petroleum jelly to needle bearing.**

c. Make sure needle bearing is on rear of front planetary carrier.
- **Apply petroleum jelly to bearing.**
- **Pay attention to its direction — Black side goes to front.**

Assembly (2) (Cont'd)

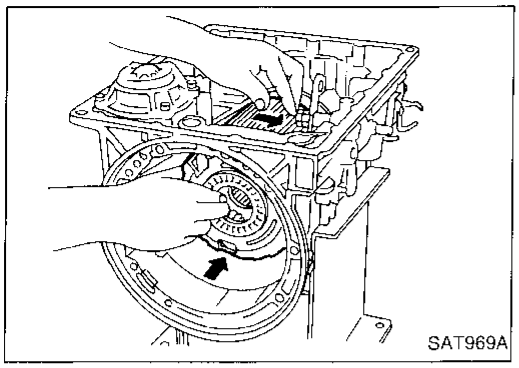

d. While rotating forward clutch drum clockwise, install front planetary carrier on forward clutch drum.

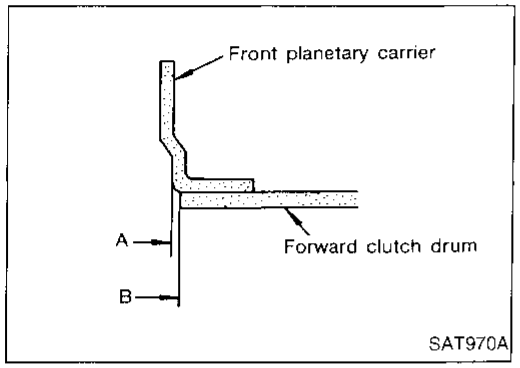

- **Check that portion A of front planetary carrier protrudes approximately 2 mm (0.08 in) beyond portion B of forward clutch assembly.**

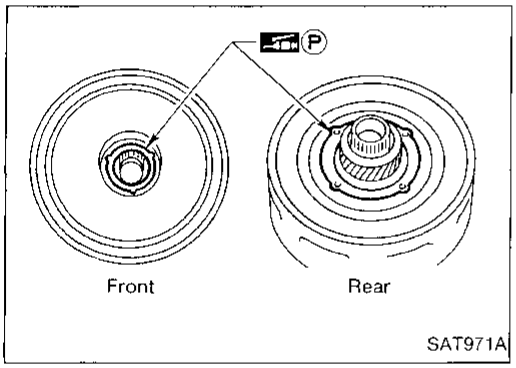

e. Make sure bearing races are on front and rear of clutch pack.
- **Apply petroleum jelly to bearing races.**
- **Securely engage pawls of bearing races with holes in clutch pack.**

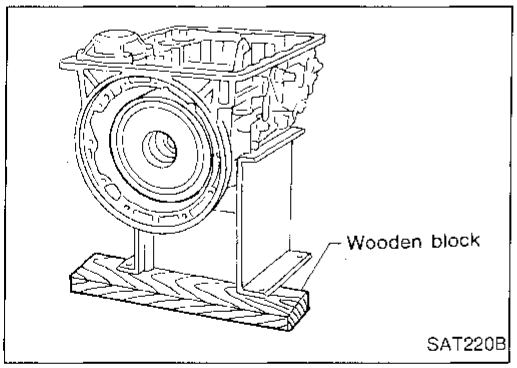

f. Install clutch pack into transmission case.

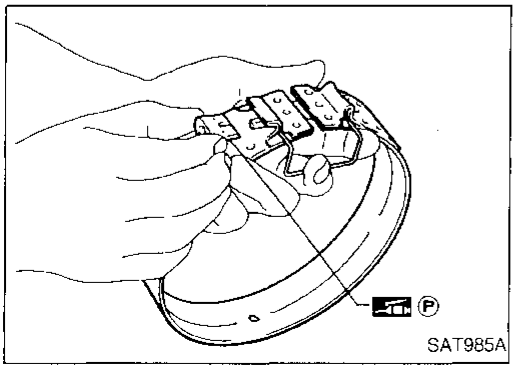

4. Install brake band and band strut.
a. Install band strut on brake band.
- **Apply petroleum jelly to band strut.**

Assembly (2) (Cont'd)

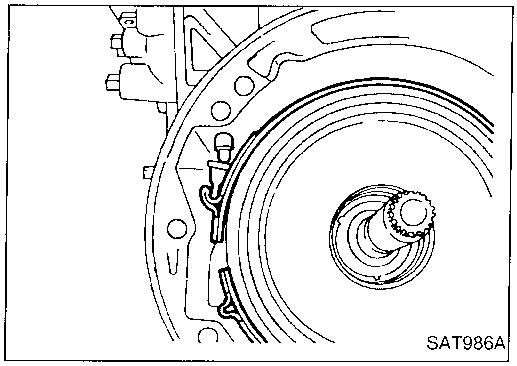

b. Place brake band on periphery of reverse clutch drum, and insert band strut into end of band servo piston stem.

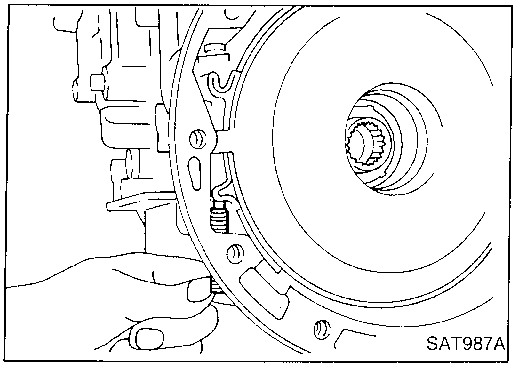

c. Install anchor end bolt on transmission case. Then, tighten anchor end bolt just enough so that reverse clutch drum (clutch pack) will not tilt forward.

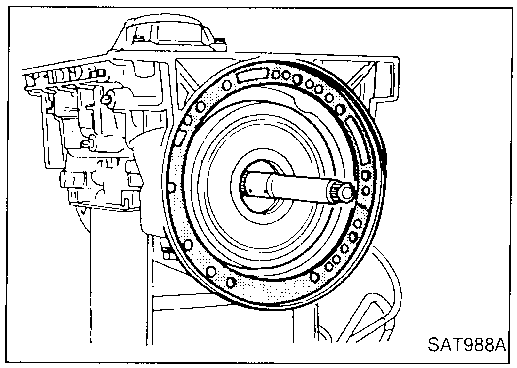

5. Install input shaft on transmission case.
- **Pay attention to its direction — O-ring groove side is front.**
6. Install gasket on transmission case.

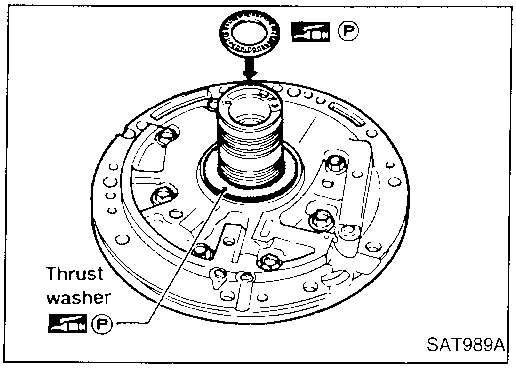

7. Install oil pump assembly.
a. Install needle bearing on oil pump assembly.
- **Apply petroleum jelly to the needle bearing.**

b. Install selected thrust washer on oil pump assembly.
- **Apply petroleum jelly to thrust washer.**

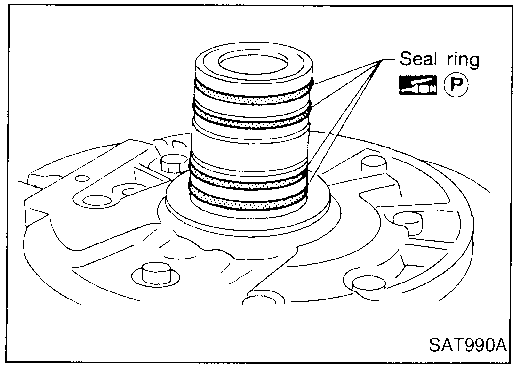

c. Carefully install seal rings into grooves and press them into the petroleum jelly so that they are a tight fit.

Assembly (2) (Cont'd)

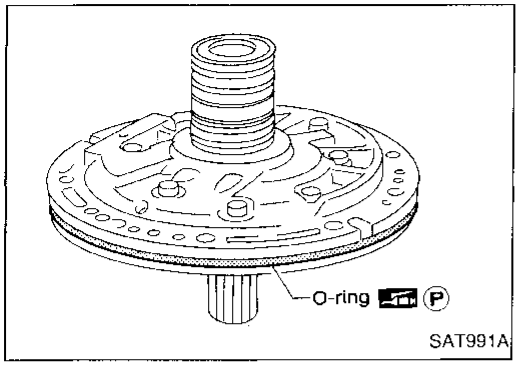

d. Install O-ring on oil pump assembly.

- **Apply petroleum jelly to O-ring.**

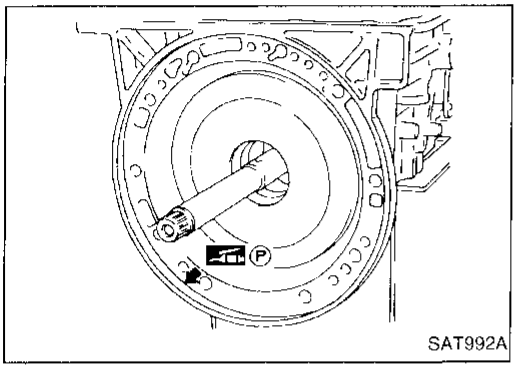

e. Apply petroleum jelly to mating surface of transmission case and oil pump assembly.

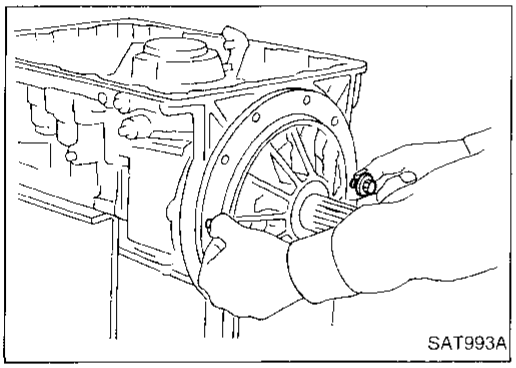

f. Install oil pump assembly.

- **Install two converter housing securing bolts in bolt holes in oil pump assembly as guides.**

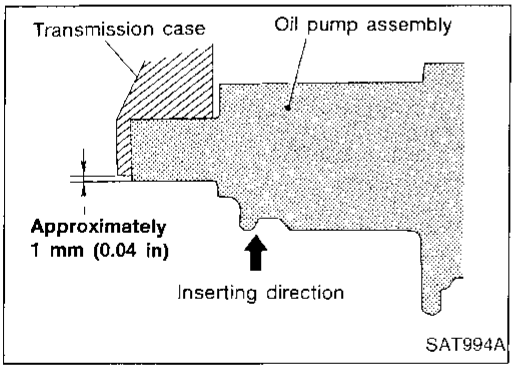

- **Insert oil pump assembly to the specified position in transmission, as shown at left.**

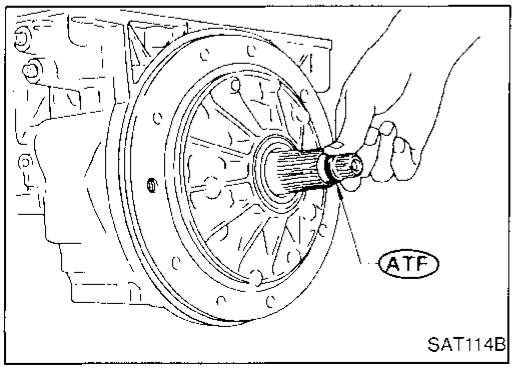

8. Install O-ring on input shaft.

- **Apply ATF to O-rings.**

Assembly (2) (Cont'd)

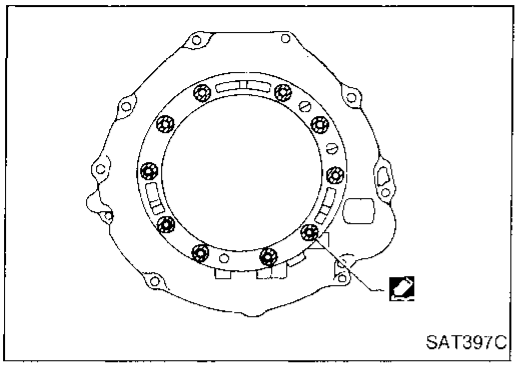

9. Install converter housing.
a. Apply recommended sealant (Nissan genuine part: KP610-00250 or equivalent) to outer periphery of bolt holes in converter housing.
- **Do not apply too much sealant.**

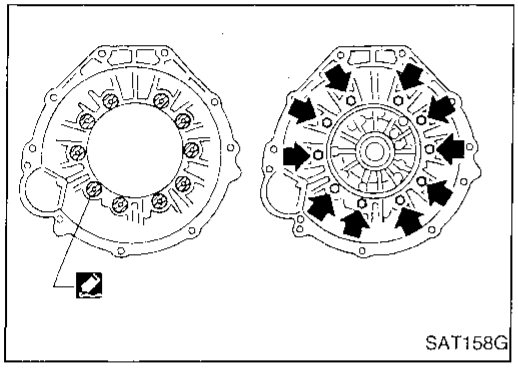

b. Apply recommended sealant (Nissan genuine part: KP610-00250 or equivalent) to seating surfaces of bolts that secure front of converter housing.
c. Install converter housing on transmission case.

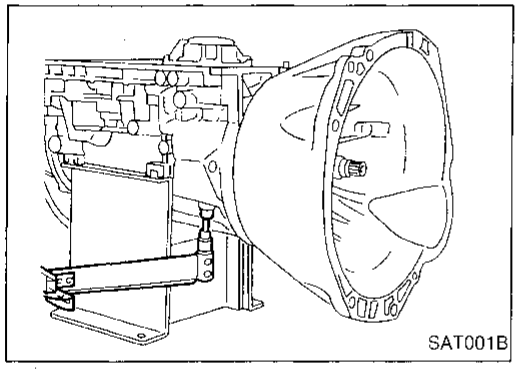

10. Adjust brake band.
a. Tighten anchor end bolt to specified torque.
Anchor end bolt:
: 4 - 6 N·m
(0.4 - 0.6 kg-m, 35 - 52 in-lb)
b. Back off anchor end bolt two and a half turns.

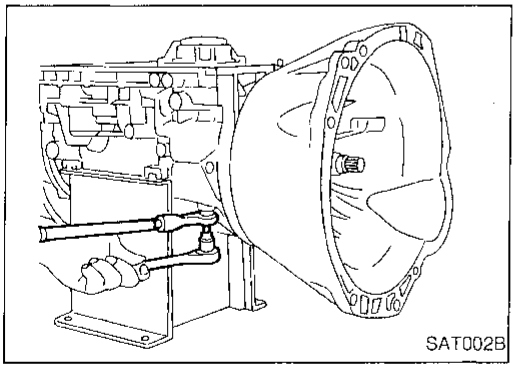

c. While holding anchor end pin, tighten lock nut.

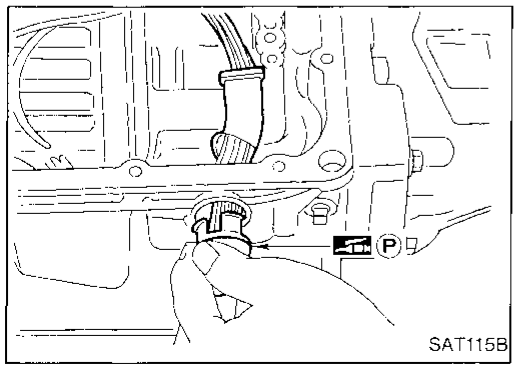

11. Install terminal cord assembly.
a. Install O-ring on terminal cord assembly.
- **Apply petroleum jelly to O-ring.**
b. Compress terminal cord assembly stopper and install terminal cord assembly on transmission case.

Assembly (2) (Cont'd)

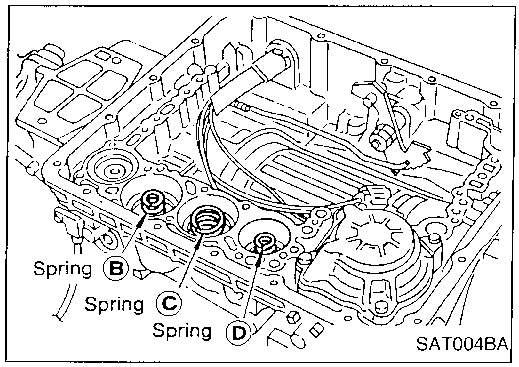

12. Install control valve assembly.
a. Install accumulator piston return springs Ⓑ, Ⓒ and Ⓓ.
Free length of return springs:
Refer to SDS, AT-215.

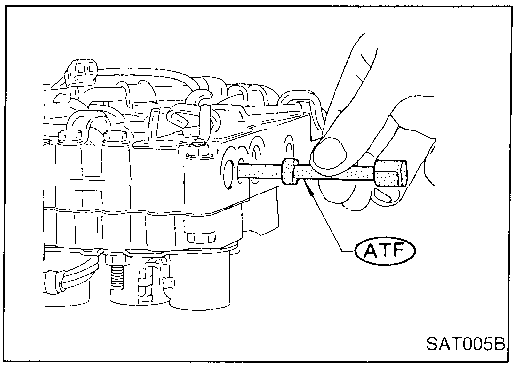

b. Install manual valve on control valve.
- **Apply ATF to manual valve.**

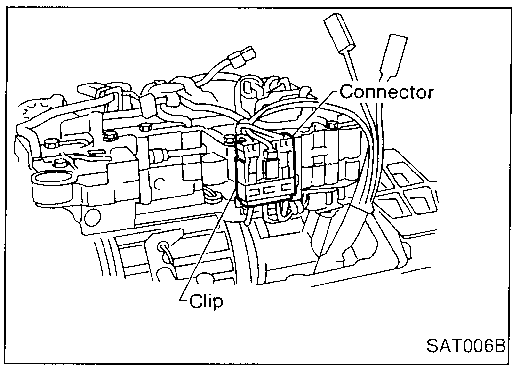

c. Place control valve assembly on transmission case. Connect solenoid connector for upper body.
d. Install connector clip.

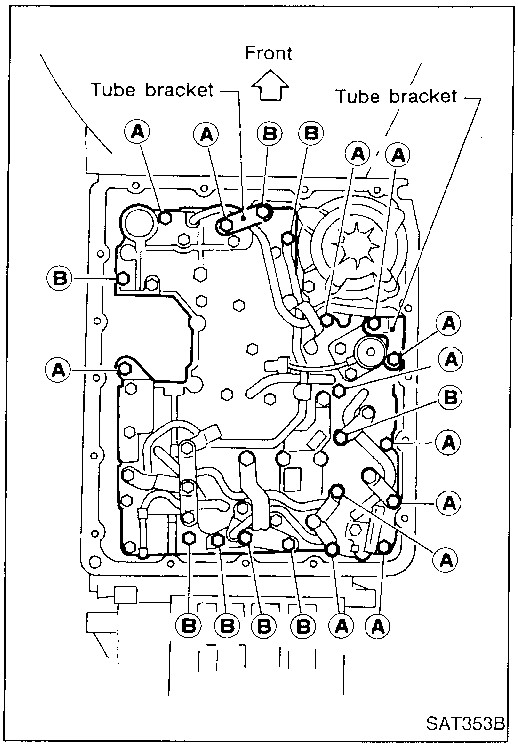

e. Install control valve assembly on transmission case.
f. Install connector tube brackets and tighten bolts Ⓐ and Ⓑ.
- **Check that terminal assembly does not catch.**

Bolt symbol	ℓ mm (in) ℓ
Ⓐ	33 (1.30)
Ⓑ	45 (1.77)

Assembly (2) (Cont'd)

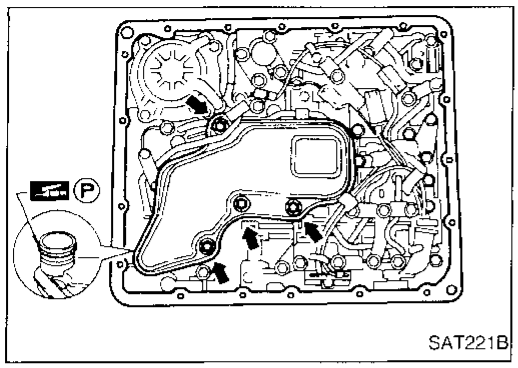

g. Install O-ring on oil strainer.
- **Apply petroleum jelly to O-ring.**

h. Install oil strainer on control valve.

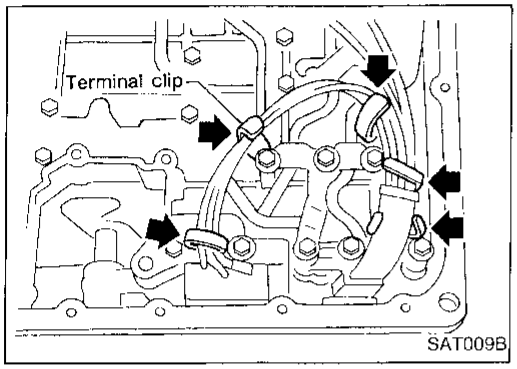

i. Securely fasten terminal harness with clips.

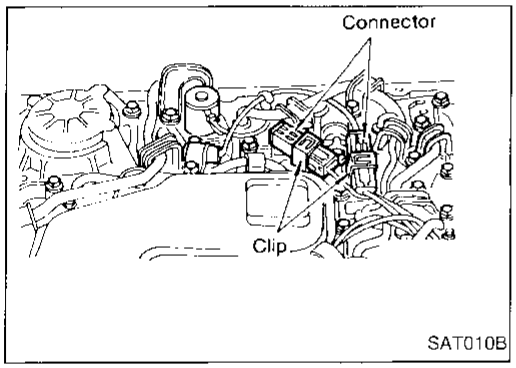

j. Install torque converter clutch solenoid valve and fluid temperature sensor connectors.

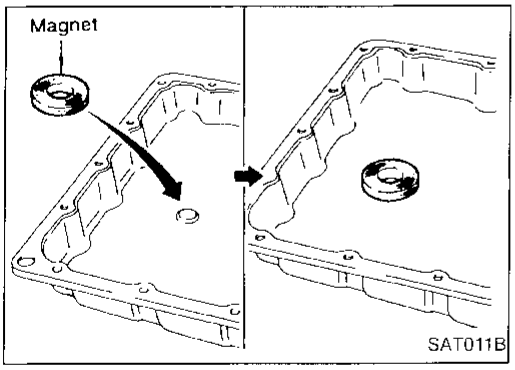

13. Install oil pan.

a. Attach a magnet to oil pan.

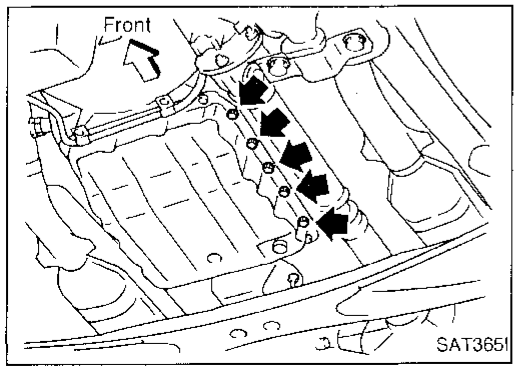

b. Install new oil pan gasket on transmission case.

c. Install oil pan and bracket on transmission case.
- **Always replace oil pan bolts as they are self-sealing bolts.**
- **Before installing bolts, remove traces of sealant and oil from mating surface and thread holes.**
- **Tighten four bolts in a criss-cross pattern to prevent dislocation of gasket.**

d. Tighten drain plug.

Assembly (2) (Cont'd)

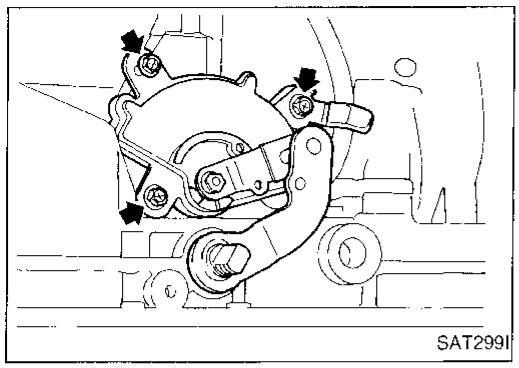

14. Install inhibitor switch.
a. Check that manual shaft is in "1" position.
b. Temporarily install inhibitor switch on manual shaft.
c. Move manual shaft to "N".

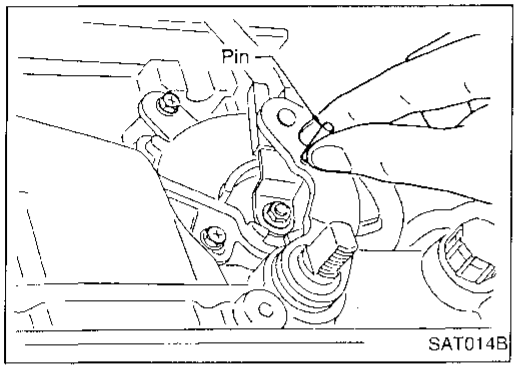

d. Tighten bolts while inserting 4.0 mm (0.157 in) dia. pin vertically into locating holes in inhibitor switch and manual shaft.

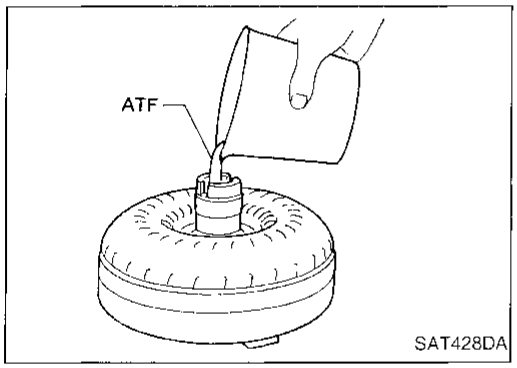

15. Install torque converter.
a. Pour ATF into torque converter.

- **Approximately 2 liters (2-1/8 US qt, 1-3/4 Imp qt) of fluid are required for a new torque converter.**
- **When reusing old torque converter, add the same amount of fluid as was drained.**

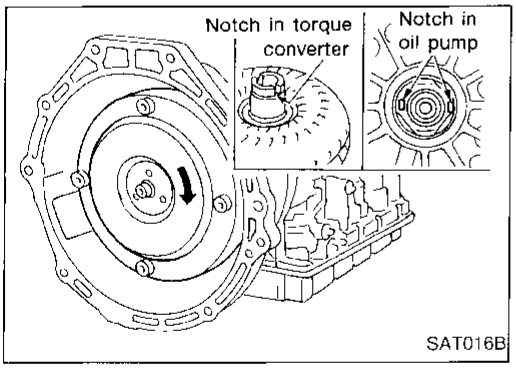

b. Install torque converter while aligning notches and oil pump.

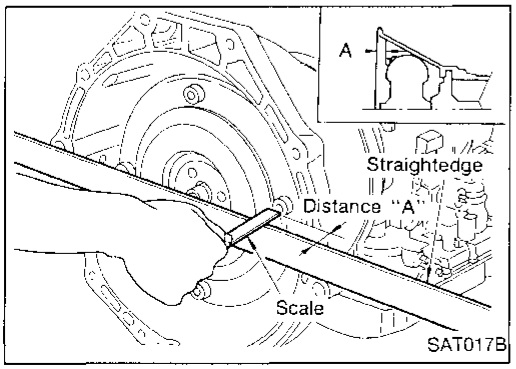

c. Measure distance A to check that torque converter is in proper position.
Distance "A":
26.0 mm (1.024 in) or more

A/T Fluid Cooler

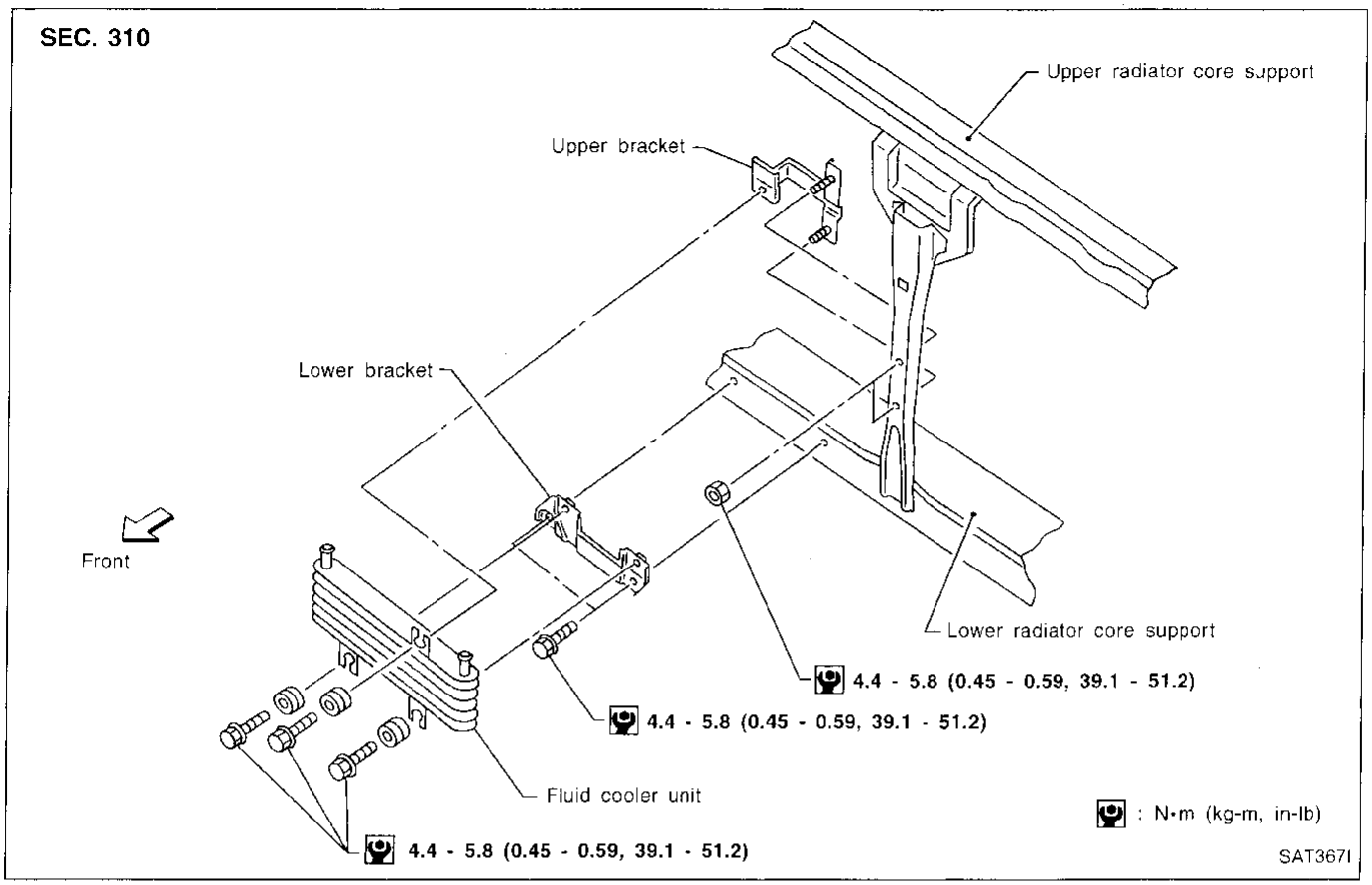

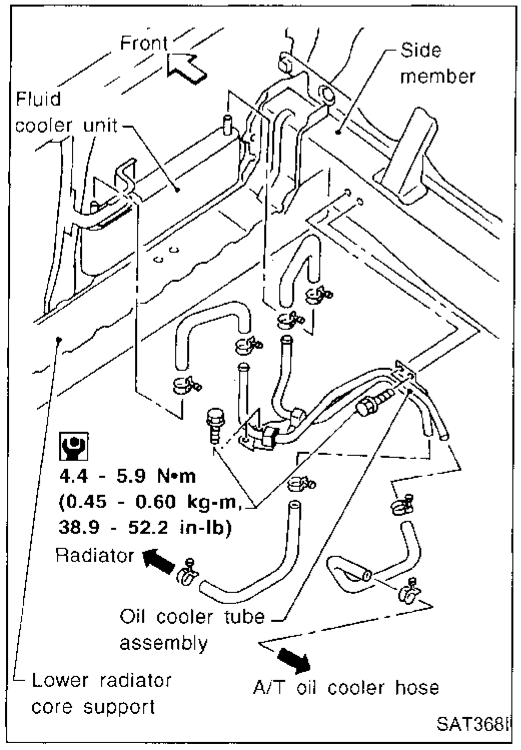

REMOVAL AND INSTALLATION

1. Remove front radiator grill. Refer to BT section ("BODY END").
2. Disconnect fluid hoses from fluid cooler unit.
3. Remove fluid cooler unit.
4. Remove fluid cooler bracket.
5. Remove clips securing fluid hose (cooler unit to radiator) and loosen hose clamps, then remove the fluid hose.
6. Loosen clamps securing fluid hose (A/T assembly to fluid cooler), then remove the fluid hose.
7. Remove bolts securing fluid cooler tube bracket.
8. Remove fluid hose with bracket.

- Reverse the removal procedure to install the A/T fluid cooler unit. Refer to the component drawing and specified tightening torque.
- Check A/T fluid level and refill if necessary. Refer to MA section ("CHASSIS AND BODY MAINTENANCE").

General Specifications

Applied model	VG33E engine	
	2WD	4WD
Automatic transmission model	RE4R01A	
Transmission model code number	44X82	44X20
Stall torque ratio	2.0 : 1	
Transmission gear ratio		
1st	2.785	
2nd	1.545	
Top	1.000	
OD	0.694	
Reverse	2.272	
Recommended oil	Nissan Matic "D" (Continental U.S. and Alaska) or Genuine Nissan Automatic Transmission Fluid (Canada)*1	
Oil capacity ℓ (US qt, Imp qt)	8.3 (8-3/4, 7-1/4)	8.5 (9, 7-1/2)

*1: Refer to MA section ("Fluids and Lubricants", "RECOMMENDED FLUIDS AND LUBRICANTS").

Specifications and Adjustment

VEHICLE SPEED WHEN SHIFTING GEARS

2WD, 4WD (Final gear ratio: 4.363) and 4WD (Final gear ratio: 4.636)

Throttle position	Vehicle speed km/h (MPH)						
	$D_1 \rightarrow D_2$	$D_2 \rightarrow D_3$	$D_3 \rightarrow D_4$	$D_4 \rightarrow D_3$	$D_3 \rightarrow D_2$	$D_2 \rightarrow D_1$	$1_2 \rightarrow 1_1$
Full throttle	48 - 52 (30 - 32)	93 - 101 (58 - 63)	148 - 158 (92 - 98)	143 - 153 (89 - 95)	88 - 96 (55 - 60)	43 - 47 (27 - 29)	44 - 48 (27 - 30)
Half throttle	35 - 39 (22 - 24)	67 - 75 (42 - 47)	134 - 142 (83 - 88)	59 - 66 (37 - 41)	32 - 38 (20 - 24)	10 - 14 (6 - 9)	44 - 48 (27 - 30)

VEHICLE SPEED WHEN PERFORMING AND RELEASING LOCK-UP

2WD, 4WD (Final gear ratio: 4.363) and 4WD (Final gear ratio: 4.636)

Throttle position	Overdrive control switch [Shift position]	Vehicle speed km/h (MPH)	
		Lock-up "ON"	Lock-up "OFF"
Full throttle	ON [D_4]	149 - 157 (93 - 98)	144 - 152 (89 - 94)
	OFF [D_3]	93 - 101 (58 - 63)	88 - 96 (55 - 60)
Half throttle	ON [D_4]	141 - 149 (88 - 93)	85 - 93 (53 - 58)
	OFF [D_3]	74 - 82 (46 - 51)	71 - 79 (44 - 49)

STALL REVOLUTION

Stall revolution	rpm	2,440 - 2,690

LINE PRESSURE

Engine speed rpm	Line pressure kPa (kg/cm², psi)	
	D, 2 and 1 positions	R position
Idle	422 - 461 (4.3 - 4.7, 61 - 67)	667 - 706 (6.8 - 7.2, 97 - 102)
Stall	1,020 - 1,098 (10.4 - 11.2, 148 - 159)	1,422 - 1,500 (14.5 - 15.3, 206 - 218)

RETURN SPRINGS

Unit: mm (in)

Parts			Item		
			Part No.	Free length	Outer diameter
Control valve	Upper body	Torque converter relief valve spring	31742-41X23	38.0 (1.496)	9.0 (0.354)
		Pressure regulator valve spring	31742-41X24	44.02 (1.7331)	14.0 (0.551)
		Pressure modifier valve spring	31742-41X19	31.95 (1.2579)	6.8 (0.268)
		Accumulator control valve spring	—	—	—
		Shuttle shift valve D spring	31762-41X01	25.0 (0.984)	7.0 (0.276)
		4-2 sequence valve spring	31756-41X00	29.1 (1.146)	6.95 (0.2736)
		Shift valve B spring	31762-41X01	25.0 (0.984)	7.0 (0.276)
		4-2 relay valve spring	31756-41X00	29.1 (1.146)	6.95 (0.2736)
		Shift valve A spring	31762-41X01	25.0 (0.984)	7.0 (0.276)
		Overrun clutch control valve spring	31762-41X03	23.6 (0.929)	7.0 (0.276)
		Overrun clutch reducing valve spring	31742-41X20	32.5 (1.280)	7.0 (0.276)
		Shuttle shift valve S spring	31762-41X04	51.0 (2.008)	5.65 (0.2224)
		Pilot valve spring	31742-41X13	25.7 (1.012)	9.0 (0.354)
		Lock-up control valve spring	31742-41X22	18.5 (0.728)	13.0 (0.512)
	Lower body	Modifier accumulator valve spring	31742-27X70	31.4 (1.236)	9.8 (0.386)
		1st reducing valve spring	31756-41X05	25.4 (1.000)	6.75 (0.2657)
		3-2 timing valve spring	31742-41X06	23.0 (0.906)	6.7 (0.264)
		Servo charger valve spring	31742-41X06	23.0 (0.906)	6.7 (0.264)
Reverse clutch		16 pcs	31505-41X02	19.69 (0.7752)	11.6 (0.457)
High clutch		16 pcs	31505-21X03	22.06 (0.8685)	11.6 (0.457)
Forward clutch (Overrun clutch)		20 pcs	31521-41X00	35.77 (1.4083)	9.7 (0.382)
Low & reverse brake		18 pcs	31505-41X05	22.3 (0.878)	11.6 (0.457)
Band servo		Spring Ⓐ	31605-41X05	45.6 (1.795)	34.3 (1.350)
		Spring Ⓑ	31605-41X00	53.8 (2.118)	40.3 (1.587)
		Spring Ⓒ	31605-41X01	29.7 (1.169)	27.6 (1.087)
Accumulator		Accumulator Ⓐ	31605-41X02	43.0 (1.693)	—
		Accumulator Ⓑ	31605-41X10	66.0 (2.598)	—
		Accumulator Ⓒ	31605-41X09	45.0 (1.772)	—
		Accumulator Ⓓ	31605-41X06	58.4 (2.299)	—

ACCUMULATOR O-RING

Accumulator	Diameter mm (in)			
	Ⓐ	Ⓑ	Ⓒ	Ⓓ
Small diameter end	29 (1.14)	32 (1.26)	45 (1.77)	29 (1.14)
Large diameter end	45 (1.77)	50 (1.97)	50 (1.97)	45 (1.77)

CLUTCHES AND BRAKES

Code number		44X82	44X20
Reverse clutch			
Number of drive plates		2	
Number of driven plates		2	
Thickness of drive plate mm (in)	Standard	1.90 - 2.05 (0.0748 - 0.0807)	
	Wear limit	1.80 (0.0709)	
Clearance mm (in)	Standard	0.5 - 0.8 (0.020 - 0.031)	
	Allowable limit	1.2 (0.047)	
Thickness of retaining plate		Thickness mm (in)	Part number
		4.8 (0.189)	31537-42X02
		5.0 (0.197)	31537-42X03
		5.2 (0.205)	31537-42X04
		5.4 (0.213)	31537-42X05
		5.6 (0.220)	31537-42X06
High clutch			
Number of drive plates		5	
Number of driven plates		5	
Thickness of drive plate mm (in)	Standard	1.52 - 1.67 (0.0598 - 0.0657)	
	Wear limit	1.40 (0.0551)	
Clearance mm (in)	Standard	1.8 - 2.2 (0.071 - 0.087)	
	Allowable limit	2.8 (0.110)	
Thickness of retaining plate		Thickness mm (in)	Part number
		3.4 (0.134)	31537-41X71
		3.6 (0.142)	31537-41X61
		3.8 (0.150)	31537-41X62
		4.0 (0.157)	31537-41X63
		4.2 (0.165)	31537-41X64
		4.4 (0.173)	31537-41X65
		4.6 (0.181)	31537-41X66
		4.8 (0.189)	31537-41X67
Forward clutch			
Number of drive plates		6	
Number of driven plates		6	
Thickness of drive plate mm (in)	Standard	1.52 - 1.67 (0.0598 - 0.0657)	
	Wear limit	1.40 (0.0551)	
Clearance mm (in)	Standard	0.45 - 0.85 (0.0177 - 0.0335)	
	Allowable limit	1.85 (0.0728)	
Thickness of retaining plate		Thickness mm (in)	Part number
		8.0 (0.315)	31537-41X00
		8.2 (0.323)	31537-41X01
		8.4 (0.331)	31537-41X02
		8.6 (0.339)	31537-41X03
		8.8 (0.346)	31537-41X04
		9.0 (0.354)	31537-41X05
		9.2 (0.362)	31537-41X06

Code number		44X82	44X20
Overrun clutch			
Number of drive plates		3	
Number of driven plates		5	
Thickness of drive plate mm (in)	Standard	1.90 - 2.05 (0.0748 - 0.0807)	
	Wear limit	1.80 (0.0709)	
Clearance mm (in)	Standard	1.0 - 1.4 (0.039 - 0.055)	
	Allowable limit	2.0 (0.079)	
Thickness of retaining plate		Thickness mm (in)	Part number
		4.2 (0.165)	31537-41X80
		4.4 (0.173)	31537-41X81
		4.6 (0.181)	31537-41X82
		4.8 (0.189)	31537-41X83
		5.0 (0.197)	31537-41X84
Low & reverse brake			
Number of drive plates		7	
Number of driven plates		7	
Thickness of drive plate mm (in)	Standard	1.90 - 2.05 (0.0748 - 0.0807)	
	Wear limit	1.80 (0.0709)	
Clearance mm (in)	Standard	0.7 - 1.1 (0.028 - 0.043)	
	Allowable limit	2.3 (0.091)	
Thickness of retaining plate		Thickness mm (in)	Part number
		6.8 (0.268)	31667-41X11
		7.0 (0.276)	31667-41X12
		7.2 (0.283)	31667-41X13
		7.4 (0.291)	31667-41X14
		7.6 (0.299)	31667-41X07
		7.8 (0.307)	31667-41X08
		8.0 (0.315)	31667-41X00
		8.2 (0.323)	31667-41X01
		8.4 (0.331)	31667-41X02
		8.6 (0.339)	31667-41X03
		8.8 (0.346)	31667-41X04
		9.0 (0.354)	31667-41X05
Brake band			
Anchor end bolt tightening torque N·m (kg-m, in-lb)		4 - 6 (0.4 - 0.6, 35 - 52)	
Number of returning revolution for anchor end bolt		2.5	

OIL PUMP AND LOW ONE-WAY CLUTCH

Oil pump clearance mm (in)	
Cam ring — oil pump housing	
Standard	0.01 - 0.024 (0.0004 - 0.0009)
Rotor, vanes and control piston — oil pump housing	
Standard	0.03 - 0.044 (0.0012 - 0.0017)
Seal ring clearance mm (in)	
Standard	0.10 - 0.25 (0.0039 - 0.0098)
Allowable limit	0.25 (0.0098)

TOTAL END PLAY

Total end play "T_1"	0.25 - 0.55 mm (0.0098 - 0.0217 in)	
	Thickness mm (in)	Part number
Thickness of oil pump cover bearing race	0.8 (0.031)	31435-41X01
	1.0 (0.039)	31435-41X02
	1.2 (0.047)	31435-41X03
	1.4 (0.055)	31435-41X04
	1.6 (0.063)	31435-41X05
	1.8 (0.071)	31435-41X06
	2.0 (0.079)	31435-41X07

REVERSE CLUTCH DRUM END PLAY

Reverse clutch drum end play "T_2"	0.55 - 0.90 mm (0.0217 - 0.0354 in)	
	Thickness mm (in)	Part number
Thickness of oil pump thrust washer	0.9 (0.035)	31528-21X01
	1.1 (0.043)	31528-21X02
	1.3 (0.051)	31528-21X03
	1.5 (0.059)	31528-21X04
	1.7 (0.067)	31528-21X05
	1.9 (0.075)	31528-21X06

REMOVAL AND INSTALLATION

Manual control linkage	
Number of returning revolutions for lock nut	2
Lock nut tightening torque N·m (kg-m, in-lb)	4.4 - 5.9 (0.45 - 0.60, 39.1 - 52.1)
Distance between end of clutch housing and torque converter mm (in)	26.0 (1.024) or more