SECTION MA

CONTENTS

Supplemental Restraint System (SRS) "AIR BAG"

The Supplemental Restraint System "Air Bag" used along with a seat belt, helps to reduce the risk or severity of injury to the driver and front passenger in a frontal collision. The Supplemental Restraint System consists of air bag modules (located in the center of the steering wheel and on the instrument panel on the passenger side), a diagnosis sensor unit, warning lamp, wiring harness and spiral cable. Information necessary to service the system safely is included in the **RS section** of this Service Manual.

WARNING:

- **To avoid rendering the SRS inoperative, which could increase the risk of personal injury or death in the event of a collision which would result in air bag inflation, all maintenance must be performed by an authorized NISSAN dealer.**
- **Improper maintenance, including incorrect removal and installation of the SRS, can lead to personal injury caused by unintentional activation of the system.**
- **Do not use electrical test equipment on any circuit related to the SRS unless instructed to in this Service Manual. SRS wiring harnesses are covered with yellow insulation either just before the harness connectors or for the complete harness, for easy identification.**

General maintenance includes those items which should be checked during normal day-to-day operation of the vehicle. They are essential if the vehicle is to continue operating properly. The owners can perform checks and inspections themselves or have their NISSAN dealers do them.

Item	Reference page
OUTSIDE THE VEHICLE The maintenance items listed here should be performed from time to time, unless otherwise specified.	
Tires Check the pressure in all tires, including the spare, periodically with a gauge and adjust to specified pressure. Check carefully for damage, cuts or excessive wear.	—
Wheel nuts When checking the tires, make sure no nuts are missing, and check for any loose nuts. Tighten if necessary.	MA-23
Tire rotation Tires should be rotated every 12,000 km (7,500 miles.)	MA-23
Wheel alignment and balance If the vehicle pulls to either side while driving on a straight and level road, or if you detect uneven or abnormal tire wear, there may be a need for wheel alignment. If the steering wheel or seat vibrates at normal highway speeds, wheel balancing may be needed.	MA-23, FA-6
Windshield wiper blades Check for cracks or wear if they do not wipe properly.	—
Doors and engine hood Check that all doors and the engine hood as well as the back hatch operate smoothly. Also make sure that all latches lock securely. Lubricate hinges, latches, rollers, and links if necessary. Make sure that the secondary latch keeps the hood from opening when the primary latch is released. When driving in areas using road salt or other corrosive materials, check lubrication frequently.	MA-24
INSIDE THE VEHICLE The maintenance items listed here should be checked on a regular basis, such as when performing periodic maintenance, cleaning the vehicle, etc.	
Lamps Make sure that the headlamps, stop lamps, tail lamps, turn signal lamps, and other lamps are all operating properly and installed securely. Also check headlamp aim.	—
Warning lamps and buzzers/chimes Make sure that all warning lamps and buzzers/chimes are operating properly.	—
Windshield wiper and washer Check that the wipers and washer operate properly and that the wipers do not streak.	—
Windshield defroster Check that the air comes out of the defroster outlets properly and in good quantity when operating the heater or air conditioning.	—
Steering wheel Check that it has the specified free play. Be sure to check for changes in the steering condition, such as excessive free play, hard steering or strange noises. **Free play: Less than 35 mm (1.38 in)**	ST-6
Seats Check seat position controls such as seat adjusters, seatback recliner, etc. to ensure they operate smoothly and that all latches lock securely in every position. Check that the head restraints move up and down smoothly and that the locks (if so equipped) hold securely in all latched positions. Check that the seat leg latches lock securely in every anchor position for folding-down rear seat and detachable rear seat (if so equipped).	—
Seat belts Check that all parts of the seat belt system (e.g., buckles, anchors, adjusters and retractors) operate properly and smoothly, and are installed securely. Check the belt webbing for cuts, fraying, wear or damage.	MA-25
Brakes Check that the brake does not pull the vehicle to one side when applied.	—
Brake pedal and booster Check the pedal for smooth operation and make sure it has the proper distance under it when depressed fully. Check the brake booster function. Be certain to keep floor mats away from the pedal.	BR-11 BR-16
Parking brake Check that the pedal has the proper travel and confirm that the vehicle is held securely on a fairly steep hill when only the parking brake is applied.	BR-27

Item	Reference page
Automatic transaxle "Park" mechanism Check that the brake pedal must be depressed for the selector lever to be moved from the "P" position. On a fairly steep hill check that your vehicle is held securely with the selector lever in the "P" position without applying brakes.	—
UNDER THE HOOD AND VEHICLE The maintenance items listed here should be checked periodically (e.g., each time you check the engine oil or refuel).	
Windshield washer fluid Check that there is adequate fluid in the tank.	—
Engine coolant level Check the coolant level when the engine is cold.	MA-16
Radiator and hoses Check the front of the radiator and clean off any dirt, insects, leaves, etc., that may have accumulated. Make sure the hoses have no cracks, deformation, deterioration or loose connections.	LC-15
Brake fluid level Make sure that the brake fluid level is between the MAX and MIN lines on the reservoir.	MA-21
Battery Check the fluid level in each cell. It should be up to the bottom of the cell filler neck.	EL-18
Engine drive belts Make sure that no belt is frayed, worn, cracked or oily.	MA-10
Engine oil level Check the level on the dipstick after parking the vehicle on a level spot with the engine off for at least 30 seconds.	MA-18
Power steering fluid level and lines Check the level when the fluid is cold and the engine is turned off. Check the lines for proper attachment, leaks, cracks, etc.	MA-23
Automatic transaxle fluid level Check the level on the dipstick after putting the selector lever in "P" with the engine idling.	MA-20
Exhaust system Make sure there are no loose supports, cracks or holes. If the sound of the exhaust seems unusual or there is a smell of exhaust fumes, immediately locate the trouble and correct it.	MA-20
Underbody The underbody is frequently exposed to corrosive substances such as those used on icy roads or to control dust. It is very important to remove these substances, otherwise rust will form on the floor pan, frame, fuel lines and around the exhaust system. At the end of winter, the underbody should be thoroughly flushed with plain water, and carefully cleaned in those areas where mud and dirt can easily accumulate.	—
Fluid leaks Check under the vehicle for fuel, oil, water or other fluid leaks after the vehicle has been parked for awhile. Water dripping from the air conditioner after use is normal. If you should notice any leaks or gasoline fumes are evident, check for the cause and correct it immediately.	—

Two different maintenance schedules are provided, and should be used, depending upon the conditions under which the vehicle is mainly operated. **After 60,000 miles (96,000 km) or 48 months, continue the periodic maintenance at the same mileage/time intervals.**

SCHEDULE 1

Follow Periodic Maintenance Schedule 1 if your driving habits frequently include one or more of the following driving conditions:

- Repeated short trips of less than 5 miles (8 km).
- Repeated short trips of less than 10 miles (16 km) with outside temperatures remaining below freezing.
- Operating in hot weather in stop-and-go "rush hour" traffic.
- Extensive idling and/or low speed driving for long distances, such as police, taxi or door-to-door delivery use.
- Driving in dusty conditions.
- Driving on rough, muddy, or salt spread roads.
- Towing a trailer, using a camper or a car-top carrier.

SCHEDULE 2

Follow Periodic Maintenance Schedule 2 if none of the driving conditions shown in Schedule 1 apply to your driving habits.

Schedule 1

Abbreviations: R = Replace I = Inspect. Correct or replace if necessary.

[ ]: At the mileage intervals only

MAINTENANCE OPERATION	MAINTENANCE INTERVAL																
Perform at number of miles, kilometers or months, whichever comes first.	Miles × 1,000 (km × 1,000) Months	3.75 (6) 3	7.5 (12) 6	11.25 (18) 9	15 (24) 12	18.75 (30) 15	22.5 (36) 18	26.25 (42) 21	30 (48) 24	33.75 (54) 27	37.5 (60) 30	41.25 (66) 33	45 (72) 36	48.75 (78) 39	52.5 (84) 42	56.25 (90) 45	60 (96) 48	Reference page
Emission control system maintenance																		
Drive belts	See NOTE (1)																I*	MA-10
Air cleaner filter	See NOTE (2)								[R]								[R]	MA-17
Vapor lines									I*								I*	MA-19
Fuel lines									I*								I*	MA-16
Fuel filter	See NOTE (3)*																	MA-16
Engine coolant	Replace every 30,000 miles (48,000 km) or 36 months*																	MA-11
Engine oil		R	R	R	R	R	R	R	R	R	R	R	R	R	R	R	R	MA-17
Engine oil filter (Use Nissan PREMIUM type or equivalent.)		R	R	R	R	R	R	R	R	R	R	R	R	R	R	R	R	MA-18
Spark plugs									[R]								[R]	MA-19
Timing belt	Replace every 105,000 miles (168,000 km)																	EM-12
Chassis and body maintenance																		
Brake lines & cables					I				I				I				I	MA-21
Brake pads, discs, drums & linings			I		I		I		I		I		I		I		I	MA-21, 22
Automatic transaxle oil	See NOTE (4)				I				I				I				I	MA-20
Steering gear & linkage, axle & suspension parts			I		I		I		I		I		I		I		I	MA-23, FA-5, RA-4
Steering linkage ball joints & front suspension ball joints			I		I		I		I		I		I		I		I	MA-23, FA-28, ST-25
Exhaust system			I		I		I		I		I		I		I		I	MA-20
Drive shaft boots			I		I		I		I		I		I		I		I	FA-18
Air bag system	See NOTE (5)																	RS-9

NOTE:
(1) After 60,000 miles (96,000 km) or 48 months, inspect every 15,000 miles (24,000 km) or 12 months.
(2) If operating mainly in dusty conditions, more frequent maintenance may be required.
(3) If vehicle is operated under extremely adverse weather conditions or in areas where ambient temperatures are either extremely low or extremely high, the filters might become clogged. In such an event, replace them immediately.
(4) If towing a trailer, using a camper or a car-top carrier, or driving on rough or muddy roads, change (not just inspect) oil at every 30,000 miles (48,000 km) or 24 months.
(5) Inspect the air bag system 10 years after the date of manufacture noted on the FMVSS certification label.
(*) Maintenance items and intervals with "*" are recommended by NISSAN for reliable vehicle operation. The owner need not perform such maintenance in order to maintain the emission warranty or manufacturer recall liability. Other maintenance items and intervals are required.

Schedule 2

Abbreviations: R = Replace I =Inspect. Correct or replace if necessary.

[ ]: At the mileage intervals only

MAINTENANCE OPERATION	MAINTENANCE INTERVAL									
Perform at number of miles, kilometers or months, whichever comes first.	Miles × 1,000 (km × 1,000) Months	7.5 (12) 6	15 (24) 12	22.5 (36) 18	30 (48) 24	37.5 (60) 30	45 (72) 36	52.5 (84) 42	60 (96) 48	Reference page
Emission control system maintenance										
Drive belts	See NOTE (1)								I*	MA-10
Air cleaner filter					[R]				[R]	MA-17
Vapor lines					I*				I*	MA-19
Fuel lines					I*				I*	MA-16
Fuel filter	See NOTE (2)*									MA-16
Engine coolant	Replace every 30,000 miles (48,000 km) or 36 months*									MA-11
Engine oil		R	R	R	R	R	R	R	R	MA-17
Engine oil filter (Use Nissan PREMIUM type or equivalent.)		R	R	R	R	R	R	R	R	MA-18
Spark plugs					[R]				[R]	MA-19
Timing belt	Replace every 105,000 miles (168,000 km)									EM-12
Chassis and body maintenance										
Brake lines & cables			I		I		I		I	MA-21
Brake pads, discs, drums & linings			I		I		I		I	MA-21, 22
Automatic transaxle oil			I		I		I		I	MA-20
Steering gear linkage, axle & suspension parts					I				I	MA-23, FA-5, RA-4
Exhaust system					I				I	MA-20
Drive shaft boots			I		I		I		I	FA-18
Air bag system	See NOTE (3)									RS-9

NOTE: (1) After 60,000 miles (96,000 km) or 48 months, inspect every 15,000 miles (24,000 km) or 12 months.
(2) If vehicle is operated under extremely adverse weather conditions or in areas where ambient temperatures are either extremely low or extremely high, the filters might become clogged. In such an event, replace them immediately.
(3) Inspect the air bag system 10 years after the date of manufacture noted on the FMVSS certification label.
(*) Maintenance items and intervals with "*" are recommended by NISSAN for reliable vehicle operation. The owner need not perform such maintenance in order to maintain the emission warranty or manufacturer recall liability. Other maintenance items and intervals are required.

Fluids and Lubricants

	Capacity (Approximate)			Recommended fluids and lubricants
	US measure	Imp measure	Liter	
Engine oil (Refill)				
With oil filter	4-1/4 qt	3-1/2 qt	4.0	● API SG or SH and Energy Conserving II *1 ● API Certification Mark *1
Without oil filter	3-7/8 qt	3-1/8 qt	3.6	
Cooling system (Reservoir tank included)				
With rear heater	12-3/4 qt	10-5/8 qt	12.1	Anti-freeze coolant (Ethylene glycol base) 50/50 mixture
Without rear heater	11-3/8 qt	9-3/8 qt	10.7	
Automatic transaxle fluid	10 qt	8-1/4 qt	9.4	Nissan Matic 'D' (Continental U.S. and Alaska) or Genuine Nissan Automatic Transmission Fluid (Canada).*3
Power steering fluid	—	—	—	Type F Automatic Transmission Fluid
Brake fluid	—	—	—	Genuine Nissan Brake Fluid *2 or equivalent DOT 3 (US FMVSS No. 116)
Multi-purpose grease	—	—	—	NLGI No. 2 (Lithium soap base)
Air conditioning system				
With rear A/C				
Lubricant	10.0 oz	10.4 oz	296 ml	Nissan A/C System Lubricant PAG Type F or equivalent *4
Refrigerant	3.25 lb	—	1.474 kg	R-134a
Front A/C only				
Lubricant	7.0 oz	7.3 oz	207 ml	Nissan A/C System Lubricant PAG Type F or equivalent *4
Refrigerant	2.0 lb	—	0.907 kg	R-134a

*1: For further details, see "SAE Viscosity Number".
*2: Available in mainland U.S.A. through your NISSAN dealer.
*3: Dexron® III/Mercon® or equivalent may also be used. Outside the continental United States and Alaska contact a NISSAN dealership for more information regarding suitable fluids, including recommended brand(s) of Dexron® III/Mercon® or Dexron® IIE/Mercon® Automatic Transmission fluid.
*4 Suniso 5GS is not acceptable for use in this vehicle.

SAE Viscosity Number

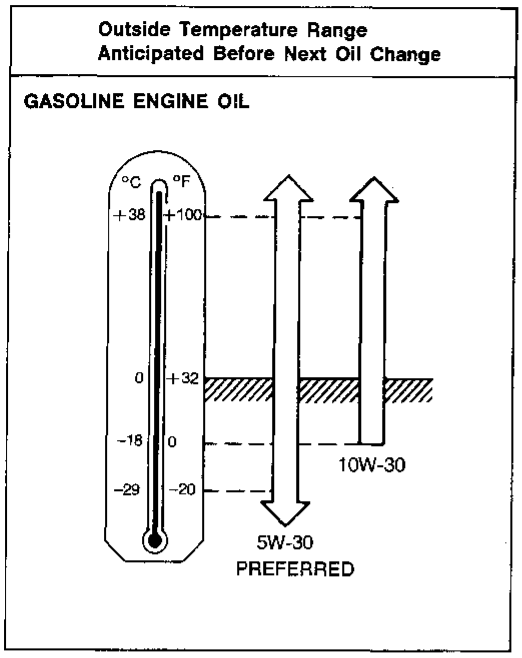

AMA079

SAE 5W-30 viscosity oil is preferred for all temperatures. SAE 10W-30 viscosity may be used if the ambient temperature is above –18°C (0°F).

Antifreeze Coolant Mixture Ratio

The engine cooling system is filled at the factory with a high-quality, year-round, antifreeze coolant solution. The antifreeze solution contains rust and corrosion inhibitors, therefore additional cooling system additives are not necessary.

CAUTION:

When adding or replacing coolant, be sure to use only an ethylene glycol antifreeze with the proper mixture ratio of 50% antifreeze 50% soft water.

Outside temperature down to		Anti-freeze	Soft water
°C	°F		
–35	–30	50%	50%

Other types of coolant solutions may damage the cooling system.

Checking Drive Belts

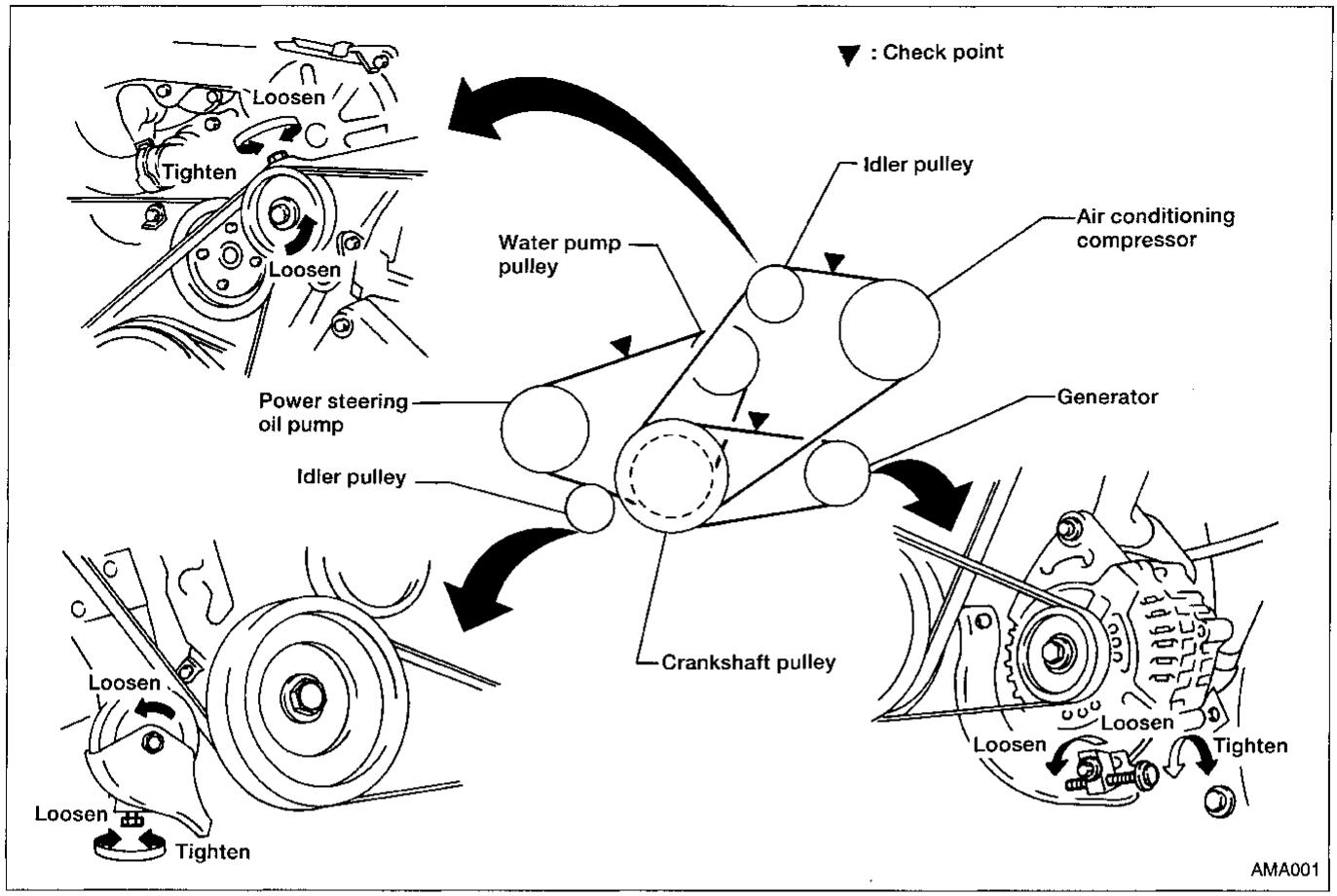

1. Inspect belts for cracks, fraying, wear or oil. If necessary, replace.
2. Inspect drive belt deflections by pushing on the belt midway between pulleys.

Inspect drive belt deflections when engine is cold.
Adjust if belt deflections exceed the limit.
Belt deflection:

Unit: mm (in)

	Used belt deflection		Deflection of new belt
	Limit	Deflection after adjustment	
Generator	12 (0.47)	7.5 - 8.5 (0.295 - 0.335)	6.5 - 7.5 (0.256 - 0.295)
Air conditioning compressor	10 (0.39)	5 - 7 (0.20 - 0.28)	4 - 6 (0.16 - 0.24)
Power steering oil pump	16 (0.63)	10 - 12 (0.39 - 0.47)	8 - 10 (0.31 - 0.39)
Applied pushing force	98 N (10 kg, 22 lb)		

Checking Drive Belts (Cont'd)

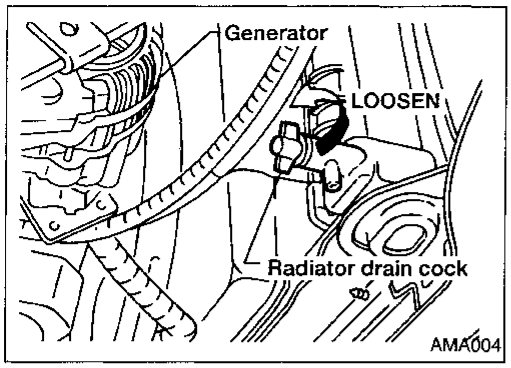

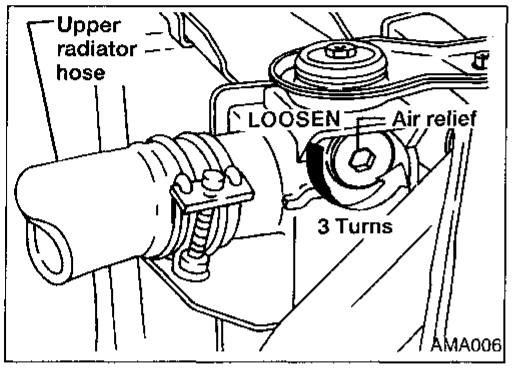

Changing Engine Coolant

WARNING:
To avoid being scalded, never change the coolant when the engine is hot.

–DRAINING ENGINE COOLANT–

1. Open radiator drain cock at bottom of radiator and remove radiator filler cap. Loosen air relief plug from radiator.
2. Remove reservoir tank, drain coolant, then clean reservoir tank.
   Install it temporarily.
3. If equipped with rear heater, remove both underbody heater hoses.

- **Be careful not to allow coolant to contact drive belts.**

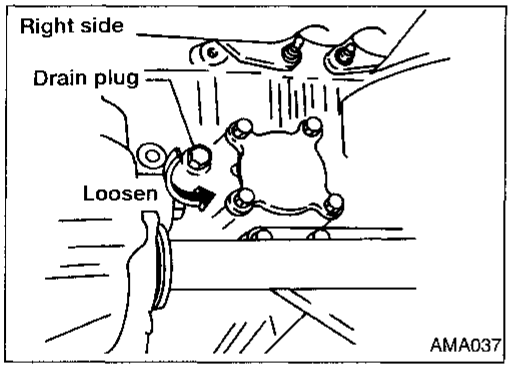

4. Open drain plugs on both sides of cylinder block.

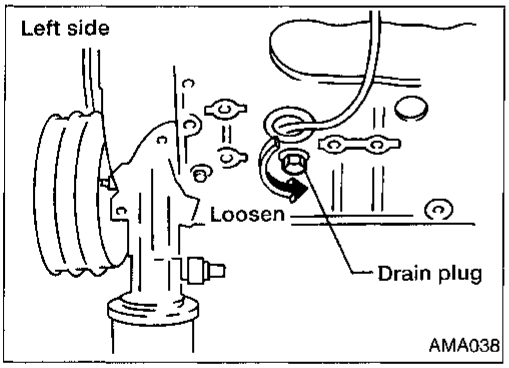

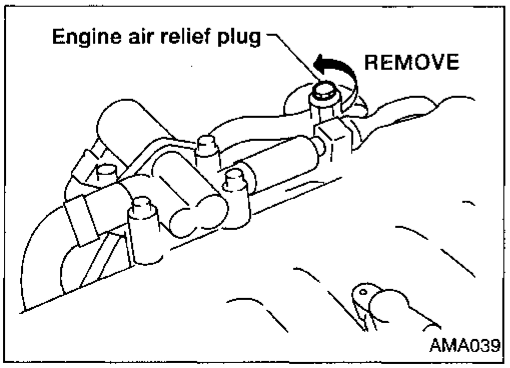

5. Remove engine air relief plug.

Changing Engine Coolant (Cont'd)

–FLUSHING COOLING SYSTEM–

6. Install radiator drain cock, tighten cylinder block drain plugs securely and install underbody heater hoses (if so equipped).
7. Fill radiator with water until water spills from the radiator air relief hole, then install radiator and engine air relief plugs.
   Air relief plug:
   [O]: 20 - 26 N·m (2.0 - 2.7 kg-m, 14 - 20 ft-lb)
8. Fill radiator and reservoir tank with water and install radiator cap.
9. Start the engine. If the vehicle is equipped with rear heater, be sure the rear fan is on and the rear temperature control switch is set to full WARM.
10. Warm up engine until radiator lower hose becomes warm, then race engine 2 or 3 times under no-load. Watch temperature gauge. If gauge begins to rise above normal, stop engine.
11. Stop engine and wait until it cools down.
- Cool down with a fan to reduce time.
12. Drain water.
13. Repeat steps 1 through 12 until clear water begins to drain from radiator.

–REFILLING ENGINE COOLANT–

14. Close drain cock, tighten cylinder block drain plugs securely and reconnect underbody heater hoses (if so equipped).
- **Apply sealant to threads of cylinder block plugs.**
  [O]: 34 - 44 N·m (3.5 - 4.5 kg-m, 25 - 33 ft-lb)

Changing Engine Coolant (Cont'd)

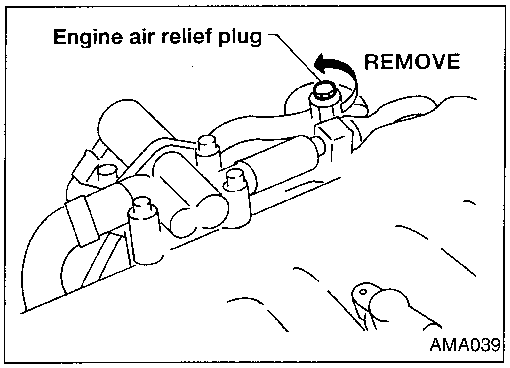

15. Remove engine air relief plug.

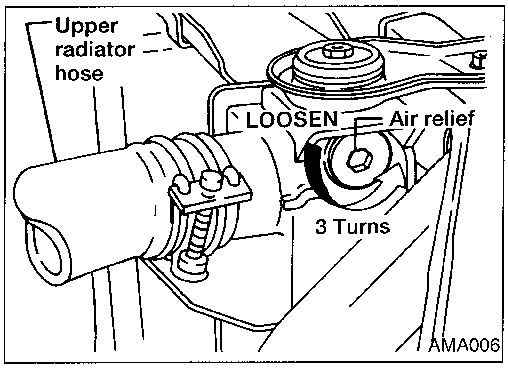

16. Loosen radiator air relief plug 3 turns.
- **Do not remove the relief plug.**

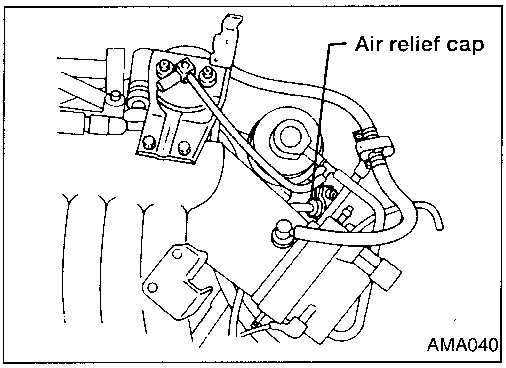

17. Remove heater pipe air relief cap.

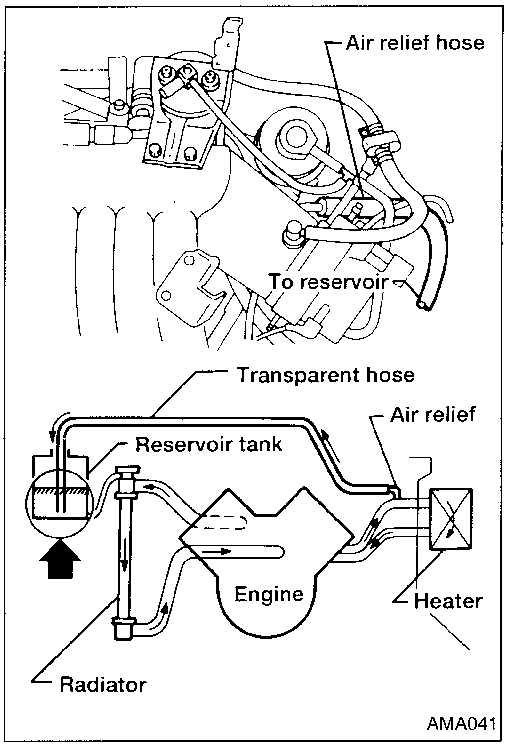

18. Install 1 meter (40") of 6 mm (0.24 in) I.D. heat resistant hose (clear if available, minimum temperature rating 105°C/220°F) to heater pipe air relief.

19. Add proper mixture of coolant to MAX mark on reservoir tank. Place hose from heater pipe air relief in reservoir tank.
- **Be sure hose end is in coolant at all times.**
- **For proper coolant mixture ratio, refer to MA-9.**

Changing Engine Coolant (Cont'd)

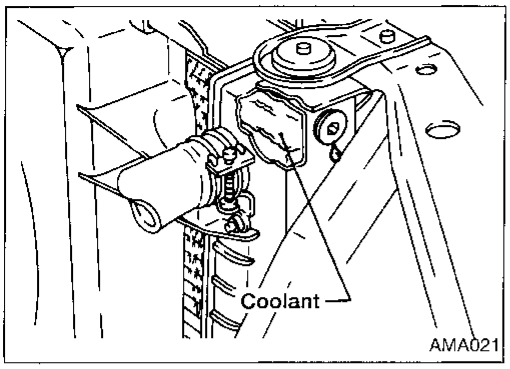

20. Slowly pour proper mixture of coolant into the radiator filler neck. Allow several minutes for air to escape.
- **Fill until coolant just starts to drip from radiator air relief plug and close plug.**
  : 20 - 26 N·m
  (2.0 - 2.7 kg-m, 14 - 20 ft-lb)

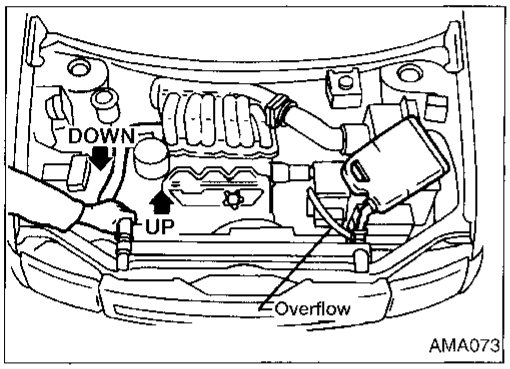

21. Pour more coolant into radiator while gently moving upper radiator hose up and down.
- **Fill until coolant no longer lowers in the filler neck.**

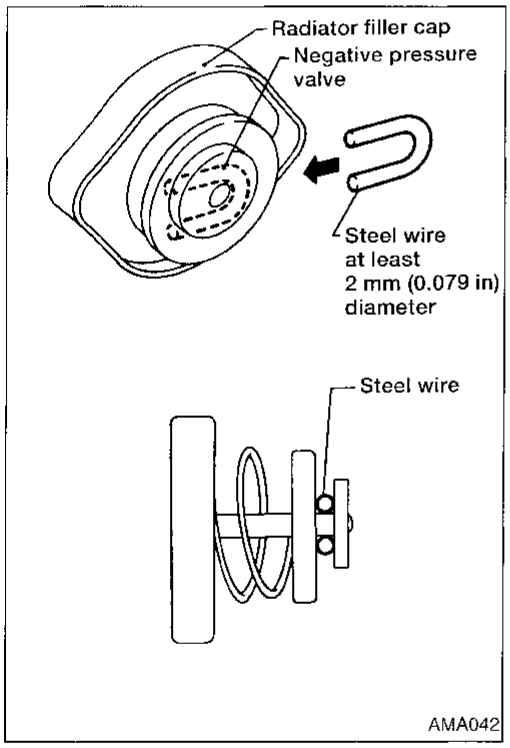

22. Install a wire under radiator filler cap negative pressure valve to allow flow of air and coolant regardless of pressure. **(Do not install cap.)**
23. With engine air relief OPEN, radiator filler cap OFF, gear selector in PARK, start engine. If vehicle is equipped with rear heater, be sure the rear fan is on and the rear temperature switch is set to full WARM. Run engine at 2,000 rpm until lower hose becomes hot (approx. 10 - 15 min.).
- **If coolant level in radiator neck lowers, add coolant.**
- **If coolant overflows radiator filler neck, install radiator filler cap (with wire installed).**
- **If coolant comes out of engine air relief plug hole, install and tighten it.**
  : 20 - 26 N·m
  (2.0 - 2.7 kg-m, 14 - 20 ft-lb)

24. Close engine air relief plug (disregard if done during Step 24).
  : 20 - 26 N·m
  (2.0 - 2.7 kg-m, 14 - 20 ft-lb)
25. Stop engine, allow to cool down completely.
- Cool down with a fan to reduce time.

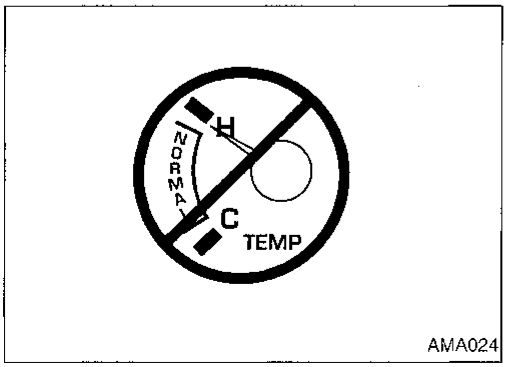

26. Refill radiator and reservoir as necessary.
27. Install radiator filler cap (with wire). Start engine and warm to normal operating temperature.
28. While performing this step, keep reservoir at maximum level.
- **Watch temperature gauge closely.** If gauge begins to rise above normal, stop engine, repeat Steps 23 and 24.

Changing Engine Coolant (Cont'd)

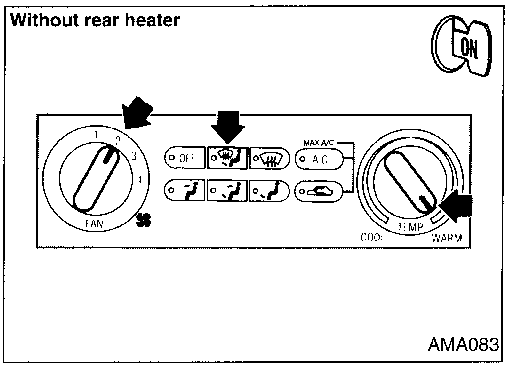

Manual air conditioner models without rear heater: Run engine at 3,000 rpm with A/C control unit temperature switch in full WARM (be sure control is not OFF) for 5 minutes or until outlet air is hot.

Repeat this process until no water noise is heard in heater core (but at least three times).

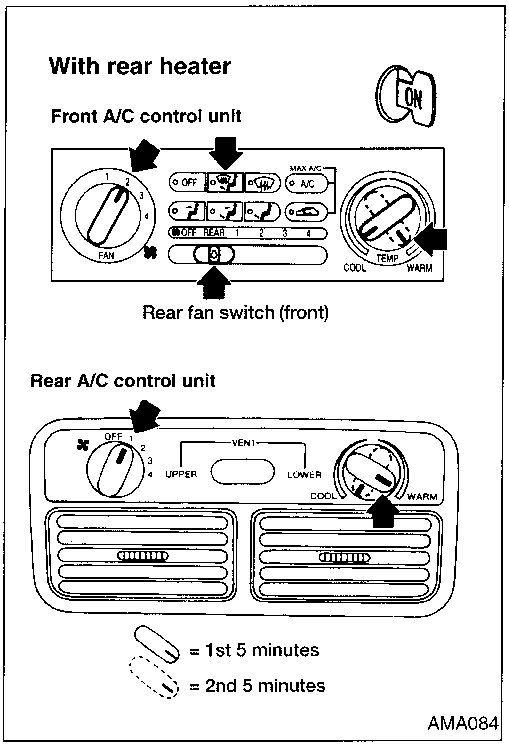

Manual air conditioner models with rear heater: Run engine at 3,000 rpm with front A/C control unit temperature control switch in full COOL position and rear A/C control unit temperature control switch full WARM, fan on, for 5 minutes or until rear outlet air is hot. Turn rear A/C control unit temperature control switch to COOL, turn front A/C control unit temperature control switch to full WARM (be sure front control is not OFF) until front outlet air is hot.

Repeat this process until no water noise is heard in heater core(s) (but at least three times).

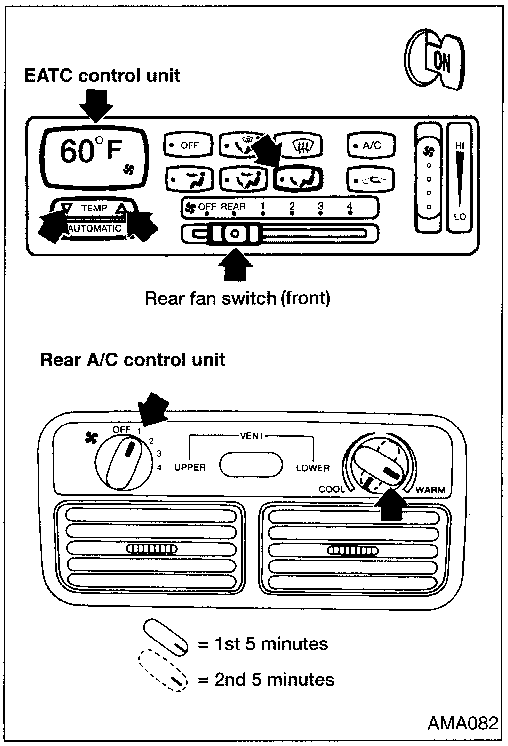

Automatic air conditioner models: Run engine at 3,000 rpm with EATC control unit set to 60°F and rear A/C control unit temperature control switch set to full WARM, fan on, for 5 minutes or until rear outlet air is hot. Turn rear A/C control unit temperature control switch to full COOL and set EATC control unit to 90°F until front outlet air is hot. Repeat this process until no water noise is heard in heater core(s) (but at least three times).

Changing Engine Coolant (Cont'd)

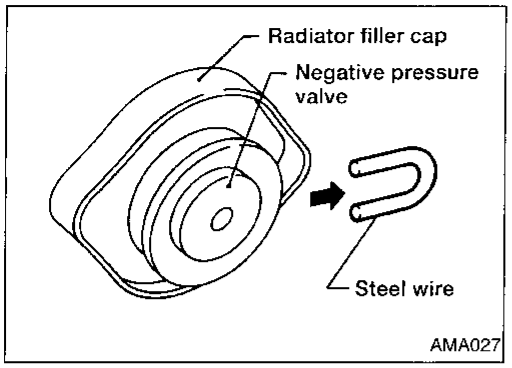

29. Stop engine.
30. Add coolant mixture to reservoir tank to MAX level line. If coolant overflow occurs from reservoir, decrease engine rpm or stop engine.
31. Cool down engine.
- Cool down with a fan to reduce time.
32. Remove radiator filler cap.
- **Refill radiator as necessary.**
33. Remove wire, reinstall radiator filler cap.
34. Remove hose from heater pipe, quickly reinstall cap and clamp.
35. Refill reservoir as necessary.
36. Reinstall coolant reservoir cap.
- Clean excess coolant from engine block.

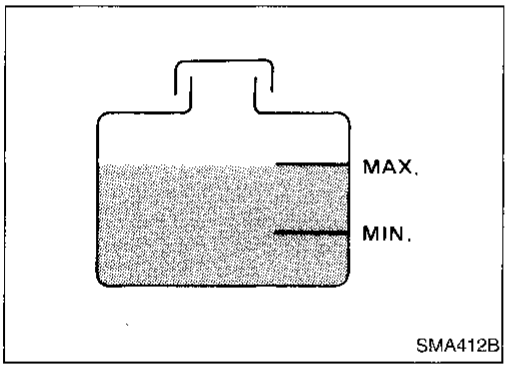

Coolant capacity (With reservoir tank):

Unit: ℓ (US qt, Imp qt)

Without rear heater	10.7 (11-3/8, 9-3/8)
With rear heater	12.1 (12-3/4, 10-5/8)

[Reservoir tank capacity (for MAX level): 0.7 ℓ (3/4 US qt, 5/8 Imp qt)]

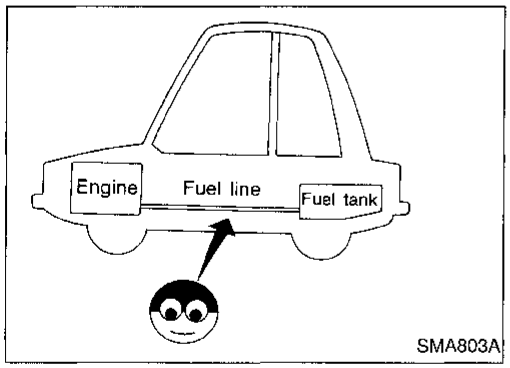

Checking Fuel Lines

Inspect fuel lines and tank for improper attachment, leaks, cracks, damage, chafing or deterioration.
If necessary, repair or replace.

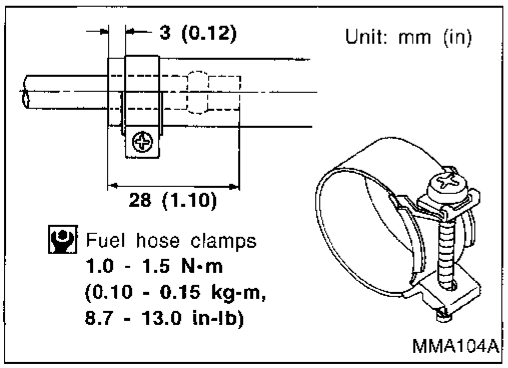

Changing Fuel Filter

CAUTION:
Tighten high-pressure rubber hose clamp so that clamp end is 3 mm (0.12 in) from hose end.
Ensure that screw does not contact adjacent parts.

Changing Fuel Filter (Cont'd)

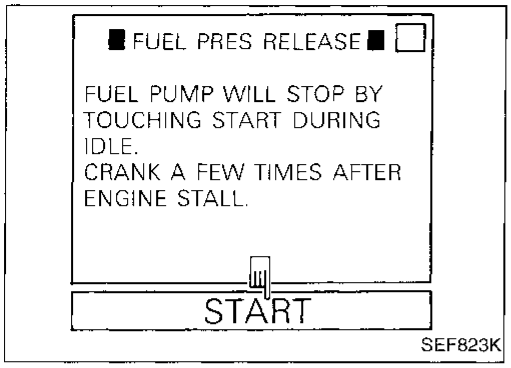

WARNING:
Before removing fuel filter, release fuel pressure from fuel line.

1. Release fuel pressure using the following procedure.
   a. Start engine.
   b. Perform "FUEL PRESSURE RELEASE" in "WORK SUPPORT" mode and release fuel pressure to zero.
   c. After engine stalls, crank engine two or three times to make sure that fuel pressure is released.
   d. Turn ignition switch OFF.

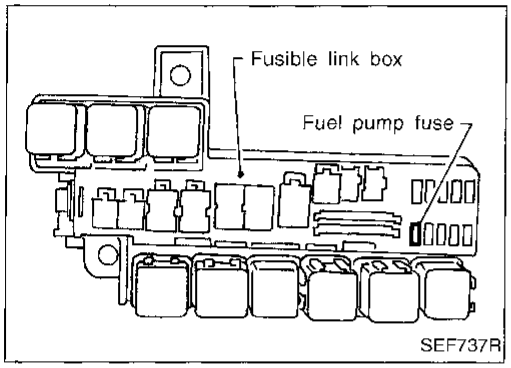

   a. Remove fuse for fuel pump.
   b. Start engine.
   c. After engine stalls, crank engine two or three times to make sure that fuel pressure is released.
   d. Turn ignition switch "OFF" and install fuse for fuel pump.

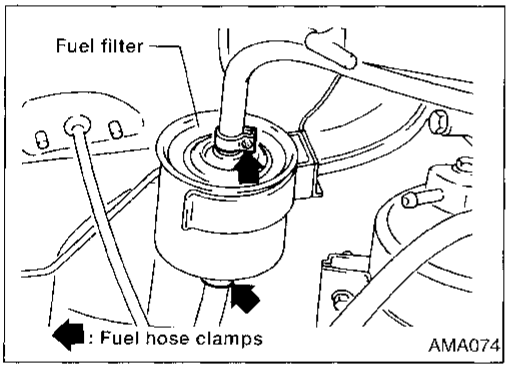

WARNING:
Use rubber gloves to prevent fuel from contacting skin when removing fuel hoses and filter.

2. Loosen fuel hose clamps.
3. Replace fuel filter.

- **Be careful not to spill fuel over engine compartment. Place a shop towel to absorb fuel.**
- **Use a high-pressure type fuel filter. Do not use a synthetic resinous fuel filter.**

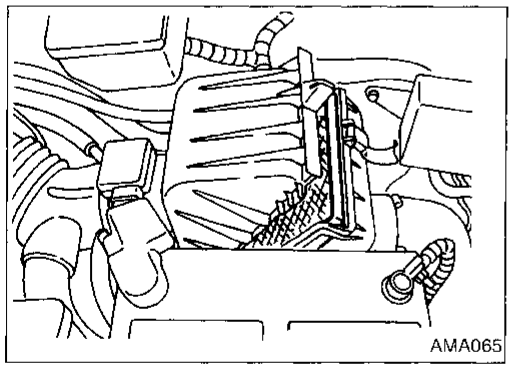

Changing Air Cleaner Filter

Unfasten clamps to change air cleaner filter.
The viscous paper type filter does not need cleaning between renewals.

Changing Engine Oil

WARNING:

- **Be careful not to burn yourself, as the engine oil is hot.**
- **Prolonged and repeated contact with used engine oil may cause skin cancer; try to avoid direct contact with used oil. If skin contact is made, wash thoroughly with soap or hand cleaner as soon as possible.**

1. Warm up engine, and check for oil leakage from engine components.

Changing Engine Oil (Cont'd)

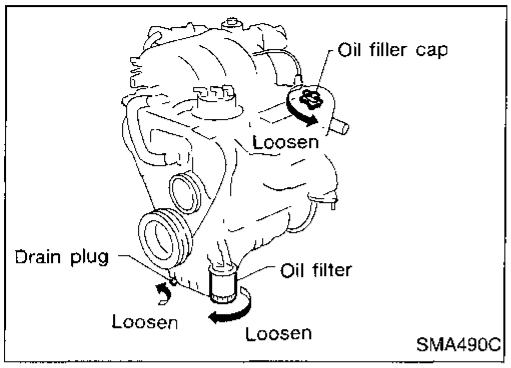

2. Remove drain plug and oil filler cap.
3. Drain oil and refill with new engine oil.

Oil grade: API SG or SH.
Viscosity:
Refer to MA-8.

Refill oil capacity (Approximately):

Unit: ℓ (US qt, Imp qt)

With oil filter change	4.0 (4-1/4, 3-1/2)
Without oil filter change	3.6 (3-7/8, 3-1/8)

CAUTION:

- **Be sure to clean drain plug and install with new washer.**
  Drain plug:
  [O]: 29 - 39 N·m
  (3.0 - 4.0 kg-m, 22 - 29 ft-lb)
- **The refill capacity depends on the oil temperature and drain time; use the "Refill oil capacity" values as a reference and be certain to check with the dipstick when changing the oil.**

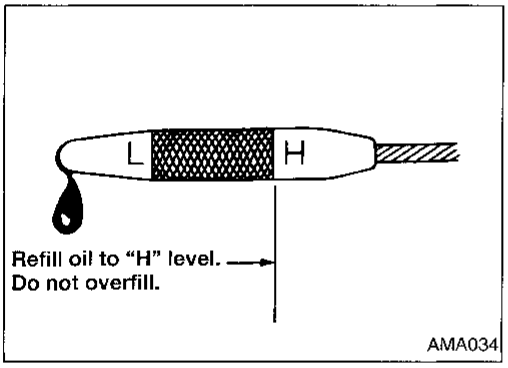

4. Check oil level.
5. Start engine and check area around drain plug and oil filter for oil leakage.
6. Run engine for a few minutes, then turn it off. After several minutes, check oil level.

Changing Oil Filter

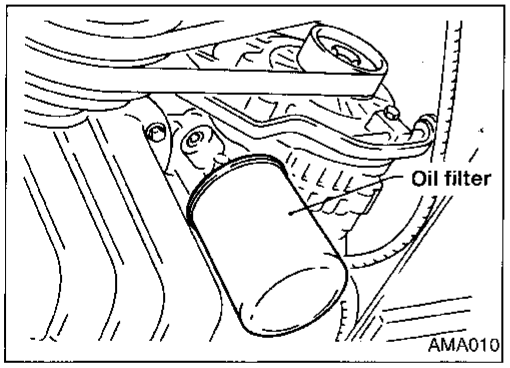

1. Remove oil filter with a suitable tool.

WARNING:
Be careful not to burn yourself, as the engine and the engine oil are hot.

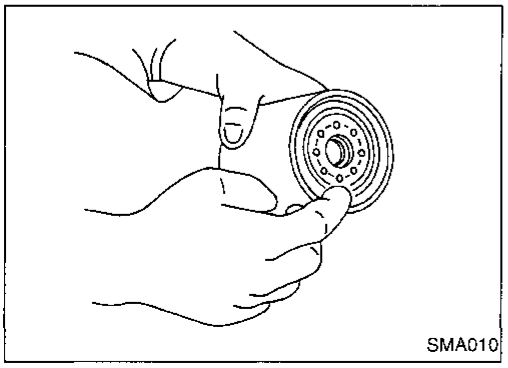

2. Clean oil filter mounting surface on cylinder block. Coat rubber seal of new oil filter with engine oil.

Changing Oil Filter (Cont'd)

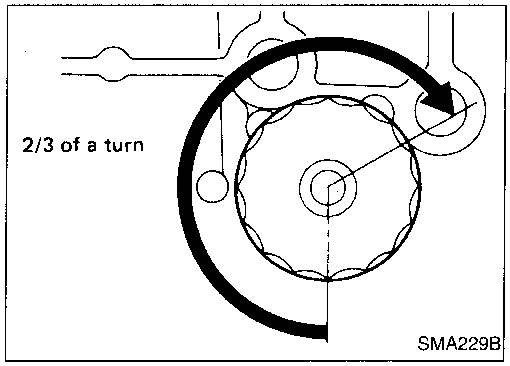

3. Screw in the oil filter until a slight resistance is felt, then tighten additionally more than 2/3 turn.
4. Add engine oil.

Refer to "Changing Engine Oil", MA-17.

- **Clean excess oil from engine block.**

Changing Spark Plugs

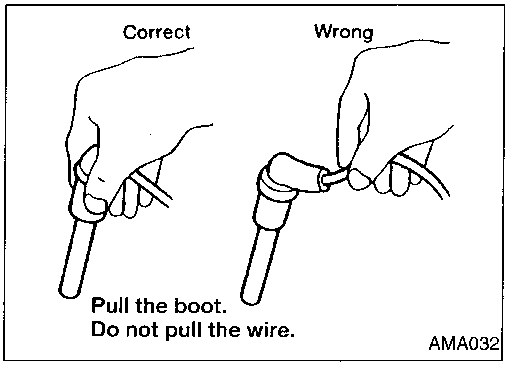

1. Disconnect ignition wires from spark plugs at boot. Do not pull on the wire.

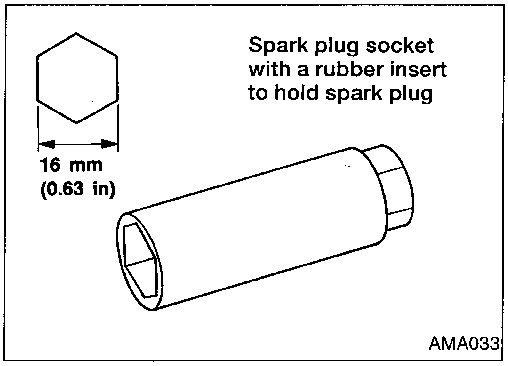

2. Remove spark plugs with spark plug socket.

Spark plug:

Make	NGK
Standard type	BKR5EY
Cold type	BKR6EY

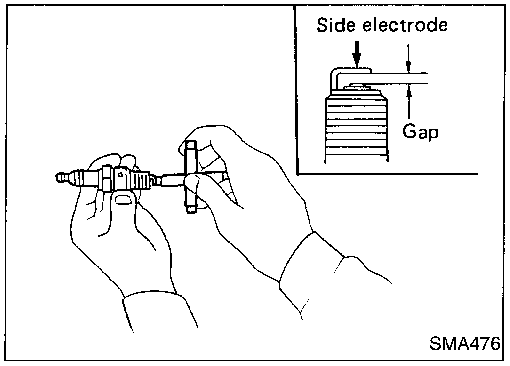

3. Check plug gap of each new spark plug.
   Gap: 0.8 - 0.9 mm (0.031 - 0.035 in)
   - **Use a wire brush for cleaning, if necessary.**
4. Install spark plugs. Reconnect spark plug wires according to numbers indicated on them.
   Spark plug:
   : 20 - 29 N·m (2 - 3 kg-m, 14 - 22 ft-lb)

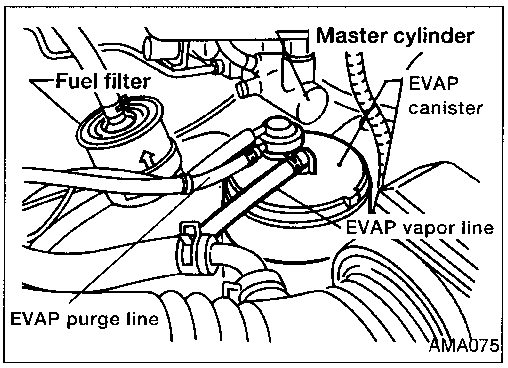

Checking EVAP Vapor & Purge Lines

1. Visually inspect EVAP vapor and purge lines for improper attachment, cracks, damage, loose connections, chafing and deterioration.
2. Inspect vacuum relief valve of fuel tank filler cap for clogging, sticking, etc.

Refer to EC section ("Inspection", "EVAPORATIVE EMISSION SYSTEM").

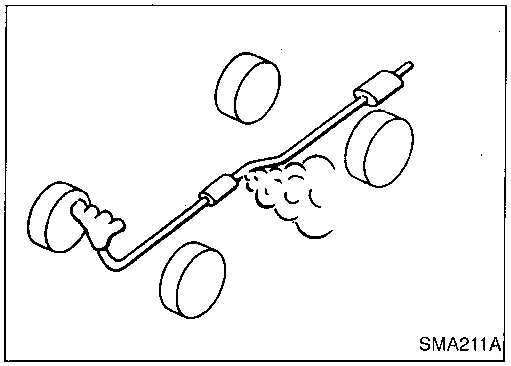
SMA211A

Checking Exhaust System

Check exhaust pipes, muffler and mounting for improper attachment, leaks, cracks, damage, loose connections, chafing or deterioration.

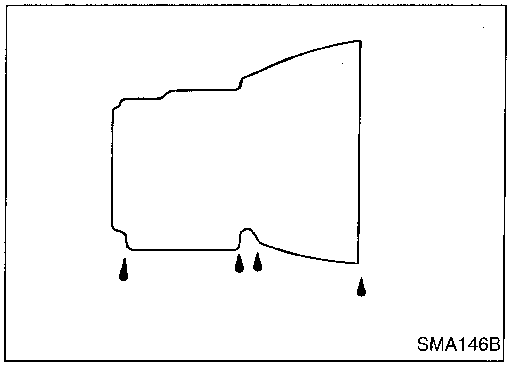
SMA146B

Checking A/T Fluid

1. Warm up engine.
2. Check for fluid leakage.
3. Before driving, fluid level can be checked at fluid temperatures of 21 to 35°C (70 to 95°F) using COLD range on dipstick. However, fluid level must be rechecked using hot range.

a. Park vehicle on level surface and set parking brake.
b. Start engine and move selector lever through each gear position. Leave selector lever in "P" position.
c. Check fluid level with engine idling.
d. Remove dipstick and wipe clean with lint-free paper.
e. Reinsert dipstick as far as it will go into charging pipe.
f. Remove dipstick and note reading. If reading is at low side, add fluid to charging pipe.

Do not overfill.

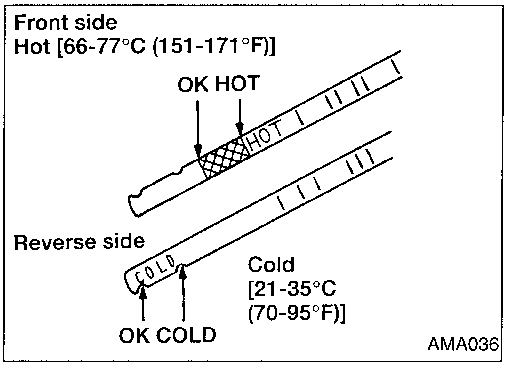

AMA036

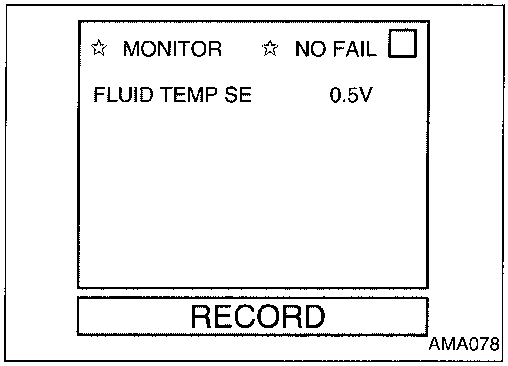

AMA078

4. Drive vehicle for approximately 15 minutes in urban areas.
5. Determine A/T fluid temperature using CONSULT.

a. Select A/T.
b. Select DATA MONITOR.
c. Select FLUID TEMP SE.
- Fluid temperature sensor value must be from 0.5 to 0.6V to ensure accurate reading.

6. Recheck fluid level at fluid temperatures of 66 to 77°C (151 to 171°F) using HOT range on dipstick.

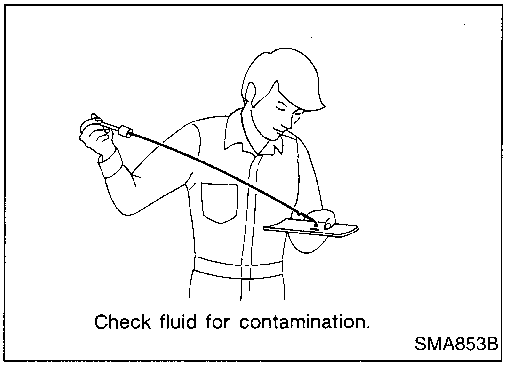
Check fluid for contamination.
SMA853B

3. Check fluid condition.

a. If fluid is very dark or smells burned, refer to A/T section for checking operation of A/T. Flush cooling system after repair of A/T.
b. If A/T fluid contains frictional material (clutches, bands, etc.), replace radiator and flush cooler line using cleaning solvent and compressed air after repair of A/T. Refer to LC section ("Radiator", "ENGINE COOLING SYSTEM").

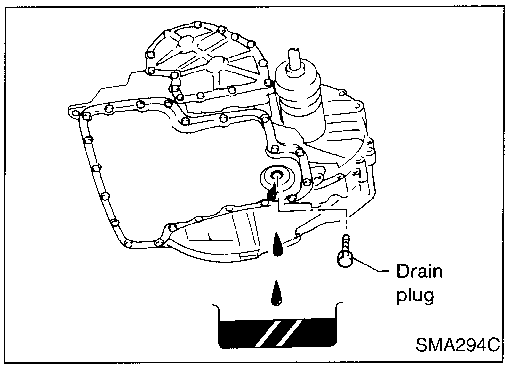

Changing A/T Fluid

1. Warm up A/T fluid.
2. Stop engine.
3. Drain A/T fluid from drain plug and refill with new A/T fluid. Always refill same volume as drained fluid.
   Fluid Grade:
   Nissan Matic 'D' (Continental U.S. and Alaska) or Genuine Nissan Automatic Transmission Fluid (Canada). Refer to MA-8.
   Fluid Capacity (With torque converter):
   9.4ℓ (10 US qt, 8-1/4 Imp qt)
   Drain plug:
   : 29 - 39 N·m (3.0 - 4.0 kg-m, 22 - 29 ft-lb)
4. Run engine at idle speed for five minutes.
5. Check fluid level and condition.
   Refer to "Checking A/T Fluid", MA-20.
   If fluid is still dirty, repeat steps 2 through 5.

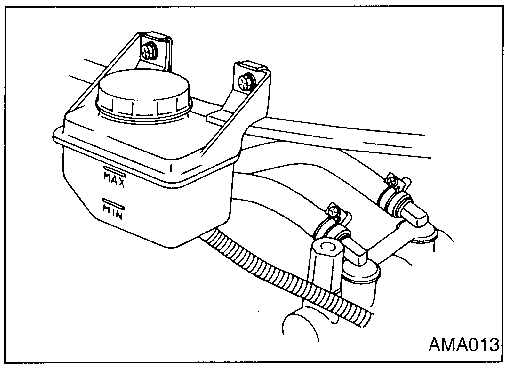

Checking Brake Fluid Level and Leaks

If fluid level is extremely low, check brake system for leaks.

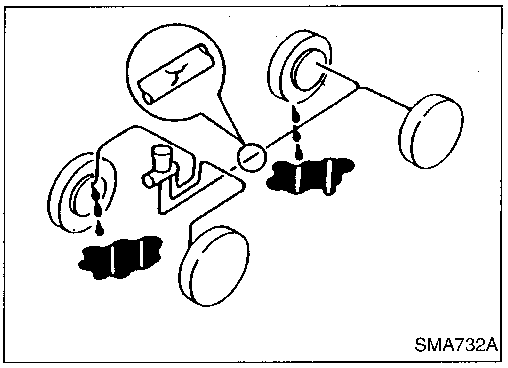

Checking Brake Lines and Cables

Check brake fluid lines and parking brake cables for improper attachment, leaks, chafing, abrasions or deterioration.

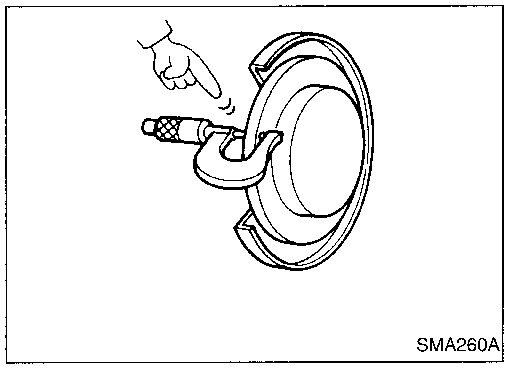

Checking Disc Brake

ROTOR

Check condition and thickness.

Standard thickness
26 mm (1.02 in)
Minimum thickness
24 mm (0.94 in)

Checking Disc Brake (Cont'd)

CALIPER

Check operation and for leakage.

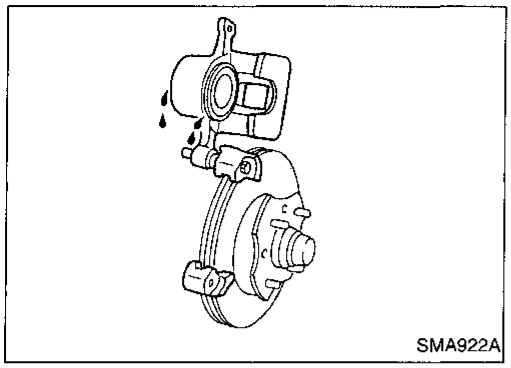
SMA922A

PAD

Check for wear or damage.

Standard thickness:
9.67 mm (0.3807 in)
Pad wear limit (Minimum thickness):
2.0 mm (0.079 in)

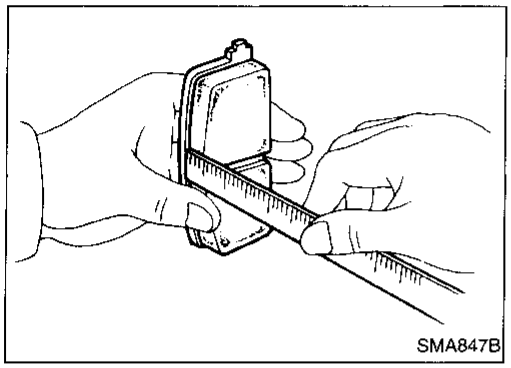
SMA847B

Checking Drum Brake

WHEEL CYLINDER

Check operation and for leakage.

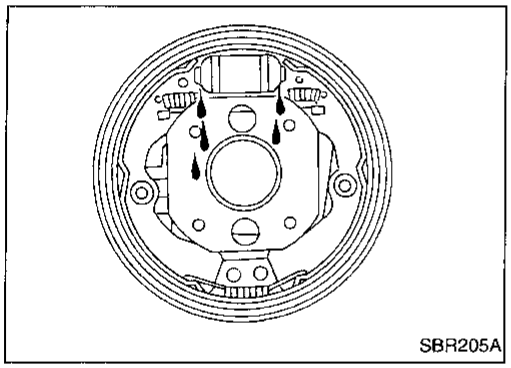
SBR205A

DRUM

Check condition of inner surface.

Standard diameter:
250 mm (9.84 in)
Drum repair limit (Inner diameter):
251.5 mm (9.90 in)

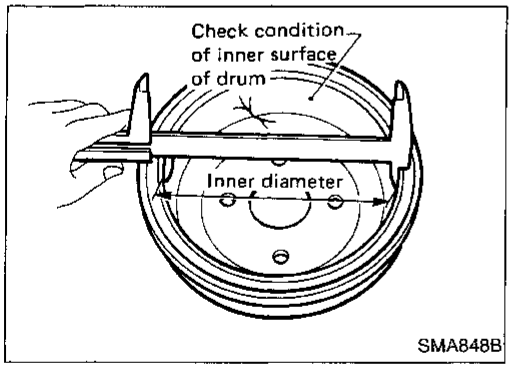

SMA848B

LINING

Check for wear or damage.

Standard thickness:
5.9 mm (0.232 in)
Lining wear limit (Minimum thickness):
2.0 mm (0.079 in)

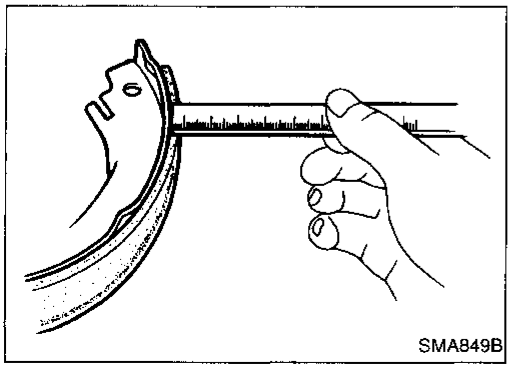
SMA849B

Checking Drum Brake (Cont'd)

TEMPORARY METHOD FOR CHECKING LINING WEAR

Remove inspection hole plug and check for lining wear.

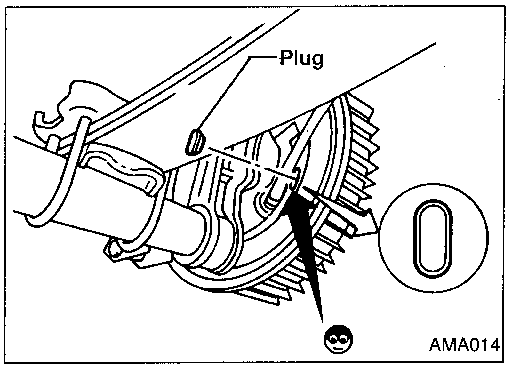

Balancing Wheels

Adjust wheel balance using road wheel center.

Wheel balance (Maximum allowable unbalance):
Refer to SDS, MA-27.

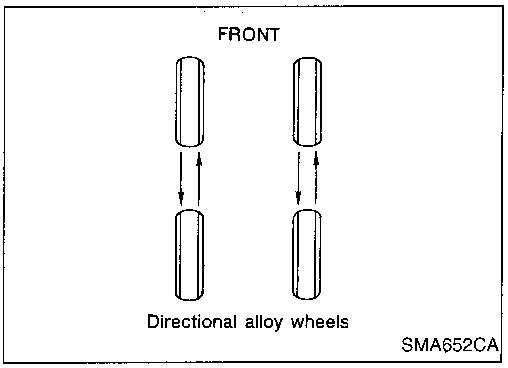

Tire Rotation

- **Do not include the T-type spare when rotating the tires.**
  Wheel nuts:
  : 98 - 118 N·m (10.0 - 12.0 kg-m, 72 - 87 ft-lb)

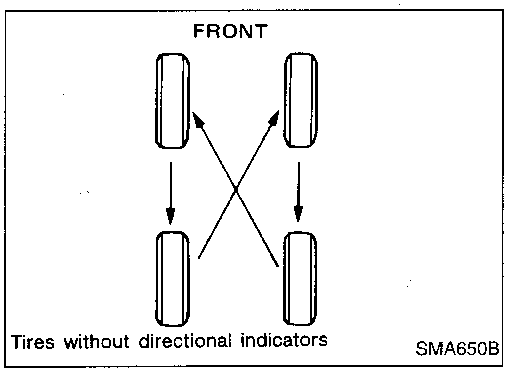

Checking Steering Gear and Linkage

STEERING GEAR

- Check gear housing and boots for looseness, damage or grease leakage.
- Check connection with steering column for looseness.

STEERING LINKAGE

Check ball joint, dust cover and other component parts for looseness, wear, damage or grease leakage.

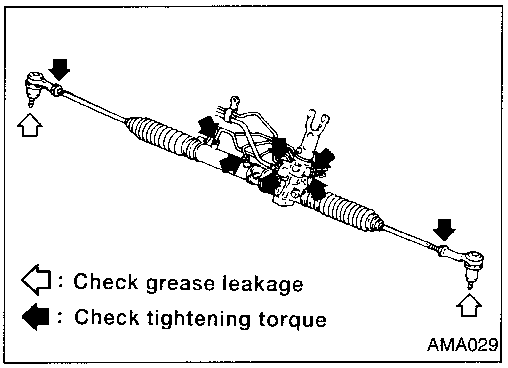

Checking Power Steering Fluid and Lines

Check fluid level with engine off. Check fluid level in reservoir. Fluid level should be checked at a fluid temperature between 0 to 30°C (32 to 86°F).

CAUTION:

- **Do not overfill.**
- **Recommended fluid is Type F Automatic Transmission Fluid.**

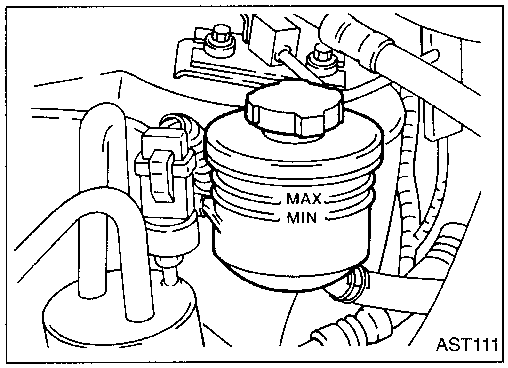

Checking Power Steering Fluid and Lines (Cont'd)

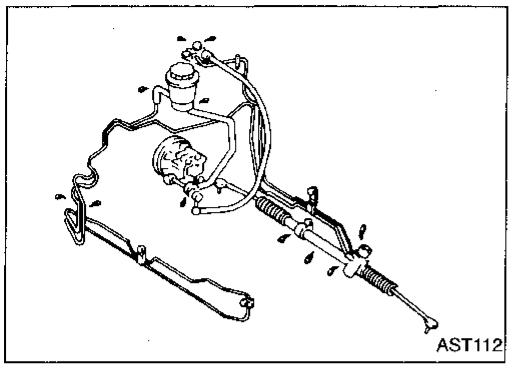

- Check lines for improper attachment, leaks, cracks, damage, loose connections, chafing or deterioration.
- Check rack boots for accumulation of power steering fluid.

Lubricating Hood Latches, Locks, Hinges, Sliding Door Rollers and Links

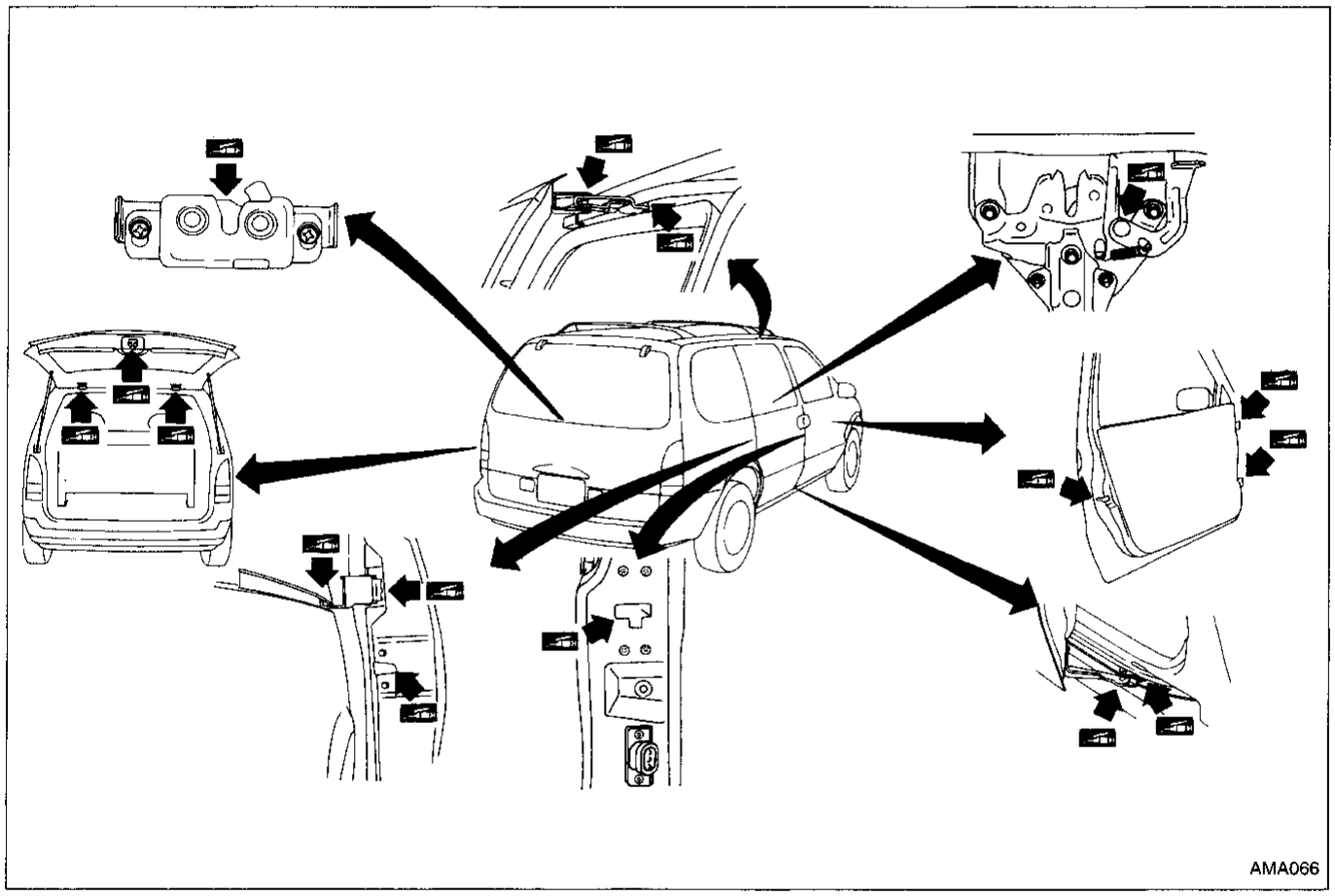

Checking Seat Belts, Buckles, Retractors, Anchors and Adjusters

CAUTION:

- **After any collision, inspect all seat belt assemblies, including retractors and other attached hardwares. NISSAN recommends replacement of all seat belt assemblies in use during a collision, unless not damaged and properly operating after a minor collision. Also inspect seat belt assemblies not in use during a collision, and replace if damaged or improperly operating.**
- **If any component of seat belt assembly is questionable, do not repair. Replace as seat belt assembly.**
- **If webbing is cut, frayed, or damaged, replace belt assembly.**
- **Never oil tongue and buckle.**
- **Use a NISSAN genuine seat belt assembly.**
- **For anchor bolt tightening torque, refer to RS section.**

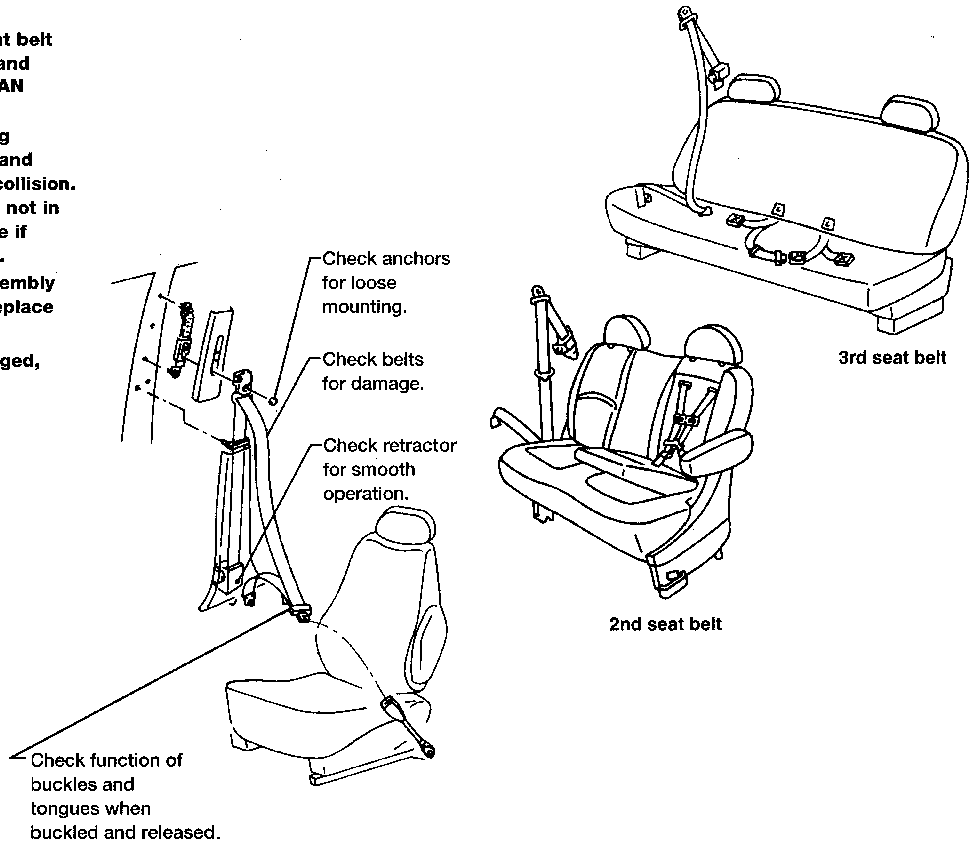

AMA076

Engine Maintenance

INSPECTION AND ADJUSTMENT

Drive belt deflection

Unit: mm (in)

	Used belt deflection		Deflection of new belt
	Limit	Deflection after adjustment	
Generator	12 (0.47)	7.5 - 8.5 (0.295 - 0.335)	6.5 - 7.5 (0.256 - 0.295)
Air conditioning compressor	10 (0.39)	5 - 7 (0.20 - 0.28)	4 - 6 (0.16 - 0.24)
Power steering oil pump	16 (0.63)	10 - 12 (0.39 - 0.47)	8 - 10 (0.31 - 0.39)
Applied pushing force	98 N (10 kg, 22 lb)		

Coolant capacity (Refill capacity)

Unit: ℓ (US qt, Imp qt)

	Without rear heater	With rear heater
With reservoir tank	10.7 (11-3/8, 9-3/8)	12.1 (12-3/4, 10-5/8)
Reservoir tank	0.7 (3/4, 5/8)	

Oil capacity (Refill capacity)

Unit: ℓ (US qt, Imp qt)

With oil filter change	4.0 (4-1/4, 3-1/2)
Without oil filter change	3.6 (3-7/8, 3-1/8)

Spark plug

	Conventional type
Make	NGK
Type	
Standard	BKR5EY
Cold	BKR6EY
Plug gap mm (in)	0.8 - 0.9 (0.031 - 0.035)

Chassis and Body Maintenance

INSPECTION AND ADJUSTMENT

Wheel balance

Maximum allowable unbalance	Dynamic (At rim flange) g (oz)	10 (0.35)
	Static g (oz)	20 (0.71)

TIGHTENING TORQUE

Unit	N·m	kg-m	ft-lb
Automatic transaxle			
Drain plug	29 - 39	3.0 - 4.0	22 - 29
Front axle and front suspension			
Tie-rod lock nut	29 - 39	3.0 - 4.0	22 - 29
Brake system			
Air bleeder valve			
Front	17 - 24	1.7 - 2.4	12 - 17
Rear	7 - 9 N·m	0.7 - 0.9 kg-m	61 - 78 in-lb
Stop lamp switch lock nut	12 - 15	1.2 - 1.5	9 - 11
Brake booster input rod lock nut	16 - 22	1.6 - 2.2	12 - 16
Wheel and tire			
Wheel nut	98 - 118	10.0 - 12.0	72 - 87