SECTION AT
AUTOMATIC TRANSAXLE

CONTENTS

RE4F04B

RE5F22A

TROUBLE DIAGNOSIS - INDEX

PFP:00000

Alphabetical & P No. Index for DTC

UCS000M8

ALPHABETICAL INDEX FOR DTC

NOTE:
If DTC U1000 is displayed with other DTCs, first perform the trouble diagnosis for DTC U1000. Refer to AT-103, "DTC U1000 CAN COMMUNICATION LINE" .

Items (CONSULT-II screen terms)	DTC	Reference page
	CONSULT-II GST*1	
A/T 1ST GR FNCTN	P0731	AT-127
A/T 2ND GR FNCTN	P0732	AT-132
A/T 3RD GR FNCTN	P0733	AT-137
A/T 4TH GR FNCTN	P0734	AT-142
A/T TCC S/V FNCTN	P0744	AT-154
ATF TEMP SEN/CIRC	P0710	AT-112
CAN COMM CIRCUIT	U1000	AT-103
ENGINE SPEED SIG	P0725	AT-123
L/PRESS SOL/CIRC	P0745	AT-162
O/R CLTCH SOL/CIRC	P1760	AT-184
PNP SW/CIRC	P0705	AT-106
SFT SOL A/CIRC*2	P0750	AT-168
SFT SOL B/CIRC*2	P0755	AT-173
TCC SOLENOID/CIRC	P0740	AT-149
TP SEN/CIRC A/T*2	P1705	AT-178
VEH SPD SEN/CIR AT*3	P0720	AT-118

*1: These numbers are prescribed by SAE J2012.
*2: When the fail-safe operation occurs, the MIL illuminates.
*3: The MIL illuminates when both the “Revolution sensor signal” and the “Vehicle speed sensor signal” meet the fail-safe condition at the same time.

P NO. INDEX FOR DTC

NOTE:
If DTC U1000 is displayed with other DTCs, first perform the trouble diagnosis for DTC U1000. Refer to AT-103, "DTC U1000 CAN COMMUNICATION LINE" .

DTC CONSULT-II GST*1	Items (CONSULT-II screen terms)	Reference page
P0705	PNP SW/CIRC	AT-106
P0710	ATF TEMP SEN/CIRC	AT-112
P0720	VEH SPD SEN/CIR AT*3	AT-118
P0725	ENGINE SPEED SIG	AT-123
P0731	A/T 1ST GR FNCTN	AT-127
P0732	A/T 2ND GR FNCTN	AT-132
P0733	A/T 3RD GR FNCTN	AT-137
P0734	A/T 4TH GR FNCTN	AT-142
P0740	TCC SOLENOID/CIRC	AT-149
P0744	A/T TCC S/V FNCTN	AT-154
P0745	L/PRESS SOL/CIRC	AT-162
P0750	SFT SOL A/CIRC*2	AT-168
P0755	SFT SOL B/CIRC*2	AT-173
P1705	TP SEN/CIRC A/T*2	AT-178
P1760	O/R CLTCH SOL/CIRC	AT-184
U1000	CAN COMM CIRCUIT	AT-103

*1: These numbers are prescribed by SAE J2012.
*2: When the fail-safe operation occurs, the MIL illuminates.
*3: The MIL illuminates when both the “Revolution sensor signal” and the “Vehicle speed sensor signal” meet the fail-safe condition at the same time.

PRECAUTIONS

PFP:00001

Precautions for Supplemental Restraint System (SRS) “AIR BAG” and “SEAT BELT PRE-TENSIONER”

UCS000M9

The Supplemental Restraint System such as “AIR BAG” and “SEAT BELT PRE-TENSIONER”, used along with a front seat belt, helps to reduce the risk or severity of injury to the driver and front passenger for certain types of collision. This system includes seat belt switch inputs and dual stage front air bag modules. The SRS system uses the seat belt switches to determine the front air bag deployment, and may only deploy one front air bag, depending on the severity of a collision and whether the front occupants are belted or unbelted.
Information necessary to service the system safely is included in the SRS and SB section of this Service Manual.

WARNING:

- **To avoid rendering the SRS inoperative, which could increase the risk of personal injury or death in the event of a collision which would result in air bag inflation, all maintenance must be performed by an authorized NISSAN/INFINITI dealer.**
- **Improper maintenance, including incorrect removal and installation of the SRS, can lead to personal injury caused by unintentional activation of the system. For removal of Spiral Cable and Air Bag Module, see the SRS section.**
- **Do not use electrical test equipment on any circuit related to the SRS unless instructed to in this Service Manual. SRS wiring harnesses can be identified by yellow and/or orange harnesses or harness connectors.**

Precautions for On Board Diagnostic (OBD) System of A/T and Engine

UCS000MA

The ECM has an on board diagnostic system. It will light up the malfunction indicator lamp (MIL) to warn the driver of a malfunction causing emission deterioration.

CAUTION:

- **Be sure to turn the ignition switch OFF and disconnect the negative battery cable before any repair or inspection work. The open/short circuit of related switches, sensors, solenoid valves, etc. will cause the MIL to light up.**
- **Be sure to connect and lock the connectors securely after work. A loose (unlocked) connector will cause the MIL to light up due to an open circuit. (Be sure the connector is free from water, grease, dirt, bent terminals, etc.)**
- **Be sure to route and secure the harnesses properly after work. Interference of the harness with a bracket, etc. may cause the MIL to light up due to a short circuit.**
- **Be sure to connect rubber tubes properly after work. A misconnected or disconnected rubber tube may cause the MIL to light up due to a malfunction of the EGR system or fuel injection system, etc.**
- **Be sure to erase the unnecessary malfunction information (repairs completed) from the TCM or ECM before returning the vehicle to the customer.**

Precautions

UCS000MB

- **Before connecting or disconnecting the TCM harness connector, turn ignition switch OFF and disconnect negative battery cable. Failure to do so may damage the TCM. Because battery voltage is applied to TCM even if ignition switch is turned off.**

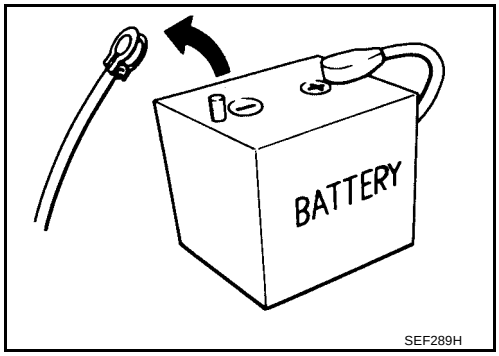

- **When connecting or disconnecting pin connectors into or from TCM, take care not to damage pin terminals (bend or break).**
  Make sure that there are not any bends or breaks on TCM pin terminal, when connecting pin connectors.

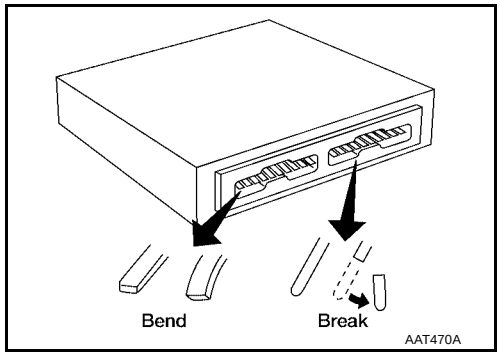

- **Before replacing TCM, perform TCM input/output signal inspection and make sure whether TCM functions properly or not. Refer to AT-97, "TCM INSPECTION TABLE" .**

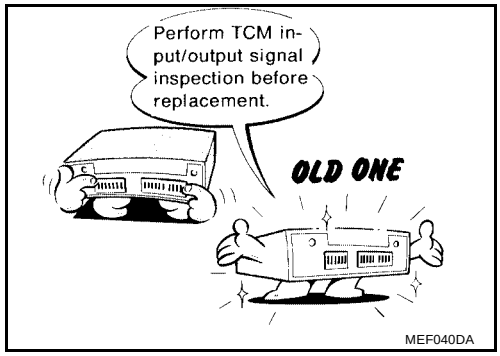

- **After performing each TROUBLE DIAGNOSIS, perform "DTC (Diagnostic Trouble Code) CONFIRMATION PROCEDURE".**
  The DTC should not be displayed in the "DTC CONFIRMATION PROCEDURE" if the repair is completed.

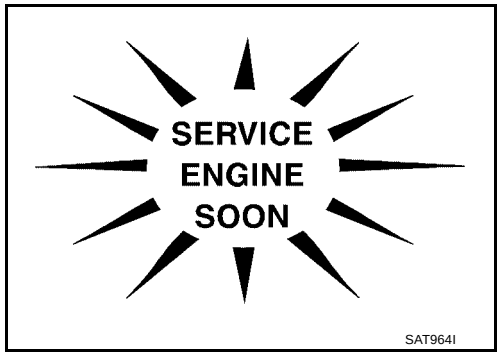

- Before proceeding with disassembly, thoroughly clean the outside of the transaxle. It is important to prevent the internal parts from becoming contaminated by dirt or other foreign matter.
- Disassembly should be done in a clean work area.
- Use lint-free cloth or towels for wiping parts clean. Common shop rags can leave fibers that could interfere with the operation of the transaxle.
- Place disassembled parts in order for easier and proper assembly.
- All parts should be carefully cleaned with a general purpose, non-flammable solvent before inspection or reassembly.
- Gaskets, seals and O-rings should be replaced any time the transaxle is disassembled.
- It is very important to perform functional tests whenever they are indicated.
- The valve body contains precision parts and requires extreme care when parts are removed and serviced. Place disassembled valve body parts in order for easier and proper assembly. Care will also prevent springs and small parts from becoming scattered or lost.
- Properly installed valves, sleeves, plugs, etc. will slide along bores in valve body under their own weight.
- Before assembly, apply a coat of recommended ATF to all parts. Apply petroleum jelly to protect O-rings and seals, or hold bearings and washers in place during assembly. Do not use grease.
- Extreme care should be taken to avoid damage to O-rings, seals and gaskets when assembling.
- Clean or replace ATF cooler if excessive foreign material is found in oil pan or clogging strainer. Refer to AT-12, "ATF COOLER SERVICE" .
- After overhaul, refill the transaxle with new ATF.
- When the A/T drain plug is removed, only some of the fluid is drained. Old A/T fluid will remain in torque converter and ATF cooling system.
  Always follow the procedures when changing A/T fluid. Refer to MA-23, "Changing A/T Fluid" .

Service Notice or Precautions

UCS000MC

FAIL-SAFE

The TCM has an electronic Fail-Safe (limp home mode). This allows the vehicle to be driven even if a major electrical input/output device circuit is damaged.
Under Fail-Safe, the vehicle always runs in third gear, even with a shift lever position of L or D. The customer may complain of sluggish or poor acceleration.
When the ignition key is turned ON following Fail-Safe operation, O/D OFF indicator lamp blinks for about 8 seconds. [For “TCM Self-diagnostic Procedure (No Tools)”, refer to AT-54, "TCM SELF-DIAGNOSTIC PROCEDURE (NO TOOLS)" .]
The blinking of the O/D OFF indicator lamp for about 8 seconds will appear only once and be cleared. The customer may resume normal driving conditions.
Always follow the “Work Flow” (Refer to AT-63, "Work Flow").
The SELF-DIAGNOSIS results will be as follows:

- The first SELF-DIAGNOSIS will indicate damage to the vehicle speed sensor or the revolution sensor.
- During the next SELF-DIAGNOSIS, performed after checking the sensor, no damages will be indicated.

TORQUE CONVERTER SERVICE

The torque converter should be replaced under any of the following conditions:

- External leaks in the hub weld area.
- Converter hub is scored or damaged.
- Converter pilot is broken, damaged or fits poorly into crankshaft.
- Steel particles are found after flushing the cooler and cooler lines.
- Pump is damaged or steel particles are found in the converter.
- Vehicle has TCC shudder and/or no TCC apply. Replace only after all hydraulic and electrical diagnoses have been made. (Converter clutch material may be glazed.)
- Converter is contaminated with engine coolant containing antifreeze.
- Internal failure of stator roller clutch.
- Heavy clutch debris due to overheating (blue converter).
- Steel particles or clutch lining material found in fluid filter or on magnet when no internal parts in unit are worn or damaged — indicates that lining material came from converter.
  The torque converter should not be replaced if:
- The fluid has an odor, is discolored, and there is no evidence of metal or clutch facing particles.
- The threads in one or more of the converter bolt holes are damaged.
- Transaxle failure did not display evidence of damaged or worn internal parts, steel particles or clutch plate lining material in unit and inside the fluid filter.
- Vehicle has been exposed to high mileage (only). The exception may be where the torque converter clutch dampener plate lining has seen excess wear by vehicles operated in heavy and/or constant traffic, such as taxi, delivery or police use.

ATF COOLER SERVICE

If A/T fluid contains frictional material (clutches, bands, etc.), or if an A/T is repaired, overhauled, or replaced, inspect and clean the A/T fluid cooler mounted in the radiator or replace the radiator. Flush cooler lines using cleaning solvent and compressed air after repair. For A/T fluid cooler cleaning procedure, refer to AT-65, "A/T Fluid Cooler Cleaning" . For radiator replacement, refer to CO-11, "RADIATOR" .

OBD-II SELF-DIAGNOSIS

- A/T self-diagnosis is performed by the TCM in combination with the ECM. The results can be read through the blinking pattern of the O/D OFF indicator or the malfunction indicator lamp (MIL). Refer to the table on AT-43 for the indicator used to display each self-diagnostic result.
- The self-diagnostic results indicated by the MIL are automatically stored in both the ECM and TCM memories.
  Always perform the procedure “HOW TO ERASE DTC” on AT-40 to complete the repair and avoid unnecessary blinking of the MIL.
- The following self-diagnostic items can be detected using ECM self-diagnostic results mode* only when the O/D OFF indicator lamp does not indicate any malfunctions.
  - park/neutral position (PNP) switch

*: For details of OBD-II, refer to EC-54, "ON BOARD DIAGNOSTIC (OBD) SYSTEM" .

- **Certain systems and components, especially those related to OBD, may use a new style slide-locking type harness connector.**
  For description and how to disconnect, refer to PG-64, "HARNESS CONNECTOR" .

Wiring Diagrams and Trouble Diagnosis

UCS000MD

When you read wiring diagrams, refer to the following:

- GI-12, "How to Read Wiring Diagrams"
- PG-4, "POWER SUPPLY ROUTING CIRCUIT"

When you perform trouble diagnosis, refer to the following:

- GI-9, "How to Follow Trouble Diagnoses"
- GI-25, "How to Perform Efficient Diagnosis for an Electrical Incident"

PREPARATION

PFP:00002

Special Service Tools

UCS000ME

The actual shapes of Kent-Moore tools may differ from those of special service tools illustrated here.

Tool number (Kent-Moore No.) Tool name	Description
KV381054S0 (J-34286) Puller 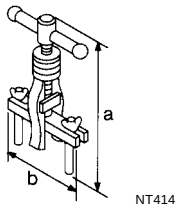	● Removing differential side oil seals ● Removing differential side bearing outer race ● Removing idler gear bearing outer race **a: 250 mm (9.84 in)** **b: 160 mm (6.30 in)**
ST33400001 (J-26082) Drift 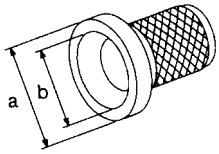	● Installing differential side oil seal (RH side) ● Installing oil seal on oil pump housing **a: 60 mm (2.36 in) dia.** **b: 47 mm (1.85 in) dia.**
(J-34301-C) Oil pressure gauge set 1 (J-34301-1) Oil pressure gauge 2 (J-34301-2) Hoses 3 (J-34298) Adapter 4 (J-34282-2) Adapter 5 (790-301-1230-A) 60° Adapter 6 (J-34301-15) Square socket 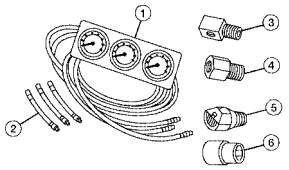	Measuring line pressure
ST27180001 (J-25726-A) Puller 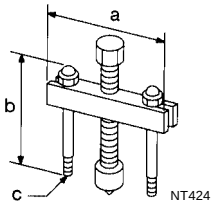	Removing idler gear **a: 100 mm (3.94 in)** **b: 110 mm (4.33 in)** **c: M8 x 1.25P**
ST23540000 (J-25689-A) Pin punch 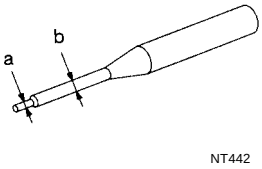	Removing and installing parking rod plate and manual plate pins **a: 2.3 mm (0.091 in) dia.** **b: 4 mm (0.16 in) dia.**
ST25710000 (J-25689-A) Pin punch 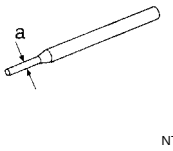	Aligning groove of manual shaft and hole of transmission case **a: 2 mm (0.08 in) dia.**

Tool number (Kent-Moore No.) Tool name	Description
KV32101000 (J-25689-A) Pin punch 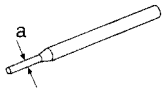 NT410	● Removing and installing manual shaft retaining pin ● Removing and installing pinion mate shaft lock pin **a: 4 mm (0.16 in) dia.**
KV31102400 (J-34285 and J-34285-87) Clutch spring compressor 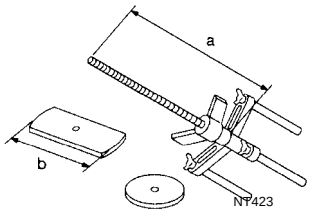 NT423	● Removing and installing clutch return springs ● Installing low & reverse brake piston **a: 320 mm (12.60 in)** **b: 174 mm (6.85 in)**
KV40100630 (J-26092) Drift 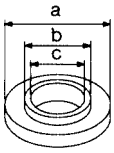 NT107	● Installing reduction gear bearing inner race ● Installing idler gear bearing inner race **a: 67.5 mm (2.657 in) dia.** **b: 44 mm (1.73 in) dia.** **c: 38.5 mm (1.516 in) dia.**
ST30720000 (J-25405 and J-34331) Bearing installer 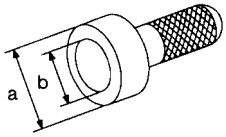 NT115	Installing idler gear bearing outer race **a: 77 mm (3.03 in) dia.** **b: 55.5 mm (2.185 in) dia.**
ST35321000 (—) Drift 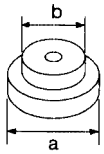 NT073	Installing output shaft bearing **a: 49 mm (1.93 in) dia.** **b: 41 mm (1.61 in) dia.**
(J-34291-A) Shim setting gauge set 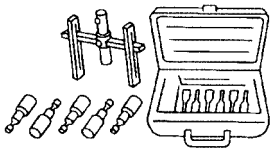 NT101	● Selecting oil pump cover bearing race and oil pump thrust washer ● Selecting side gear thrust washer
ST33230000 (J-25805-01) Drift 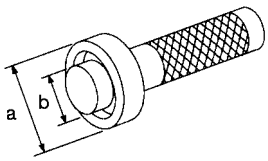 NT084	Installing differential side bearing inner race (RH side) **a: 51 mm (2.01 in) dia.** **b: 28.5 mm (1.122 in) dia.**

Tool number (Kent-Moore No.) Tool name	Description
(J-34290) Shim selecting tool set 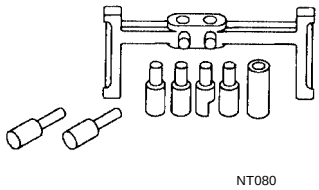 NT080	Selecting differential side bearing adjusting shim
ST3306S001 (J-22888-D) Differential side bearing puller set 1 ST33051001 (J-22888-D) Puller 2 ST33061000 (J-8107-2) Adapter 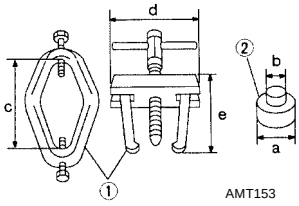 AMT153	Removing differential side bearing inner race **a: 38 mm (1.50 in) dia.** **b: 28.5 mm (1.122 in) dia.** **c: 130 mm (5.12 in)** **d: 135 mm (5.31 in)** **e: 100 mm (3.94 in)**
ST3127S000 (J-25765-A) Preload gauge 1 GG91030000 (J-25765-A) Torque wrench 2 HT62940000 (—) Socket adapter 3 HT62900000 (—) Socket adapter 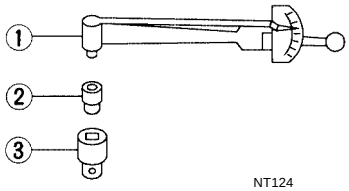 NT124	Checking differential side bearing preload
ST35271000 (J-26091) Drift 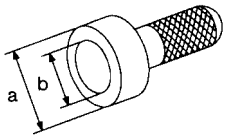 NT115	Installing idler gear **a: 72 mm (2.83 in) dia.** **b: 63 mm (2.48 in) dia.**
(J-39713) Preload adapter 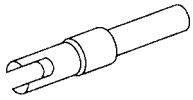 NT087	● Selecting differential side bearing adjusting shim ● Checking differential side bearing preload

Commercial Service Tools

UCS000MF

Tool name	Description
Puller 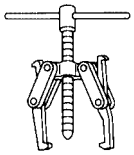 NT077	● Removing idler gear bearing inner race ● Removing and installing band servo piston snap ring
Puller 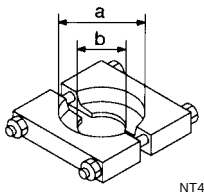 NT411	Removing reduction gear bearing inner race **a: 60 mm (2.36 in) dia.** **b: 35 mm (1.38 in) dia.**
Drift 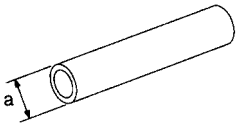 NT083	Installing needle bearing on bearing retainer **a: 36 mm (1.42 in) dia**.
Drift 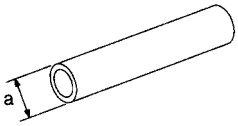 NT083	Removing needle bearing from bearing retainer **a: 33.5 mm (1.319 in) dia.**
Drift 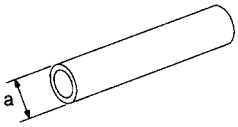 NT083	Installing differential side bearing outer race (RH side) **a: 75 mm (2.95 in) dia.**
Power tool 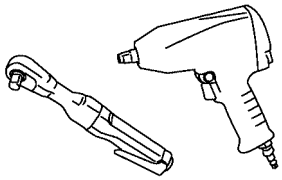 PBIC0190E	● Removing transaxle assembly ● Removing transaxle oil pan ● Removing transaxle case and cover

OVERALL SYSTEM

PFP:00000

A/T Electrical Parts Location

UCS000MG

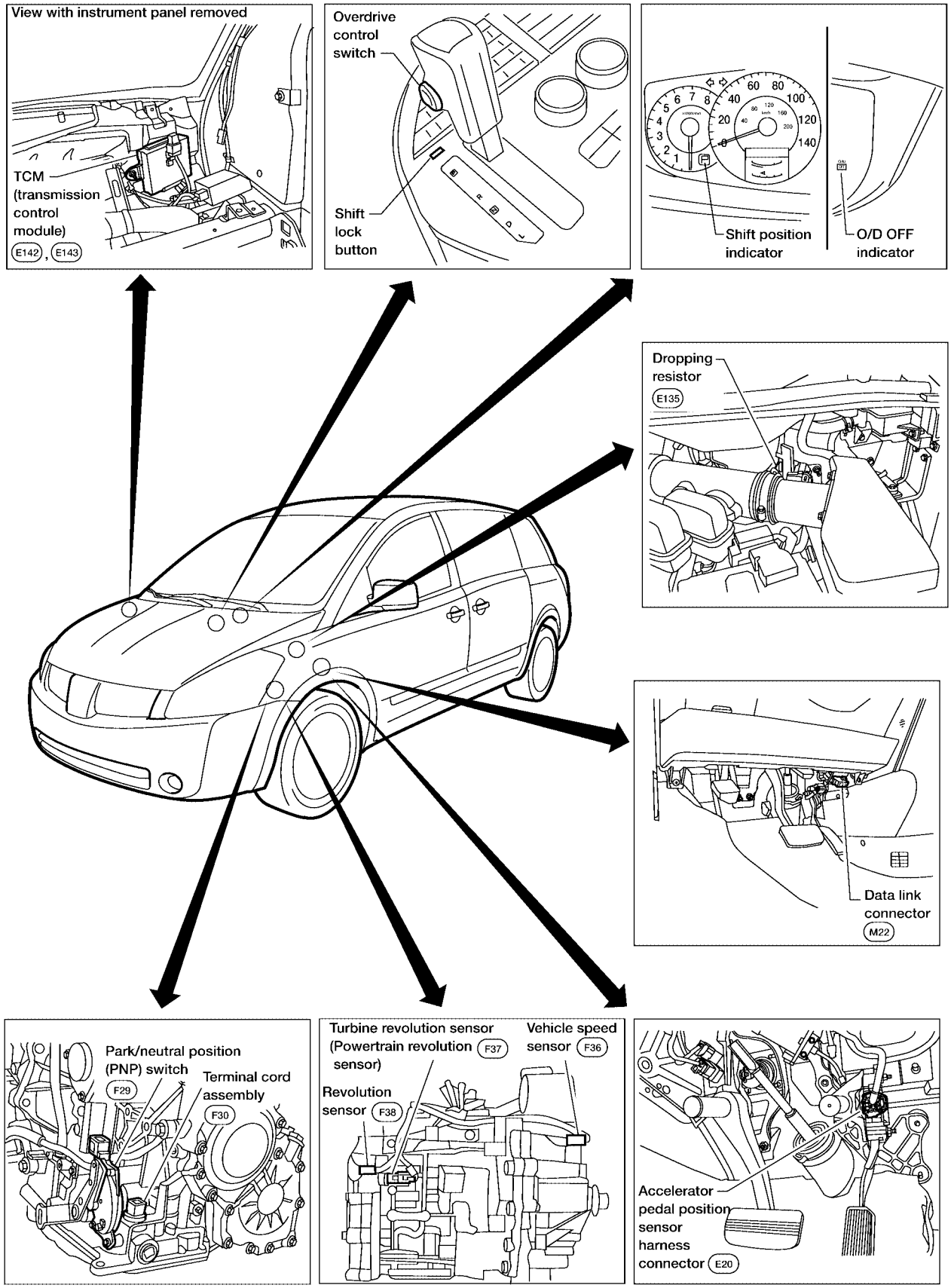

BCIA0001E

Circuit Diagram

UCS000MH

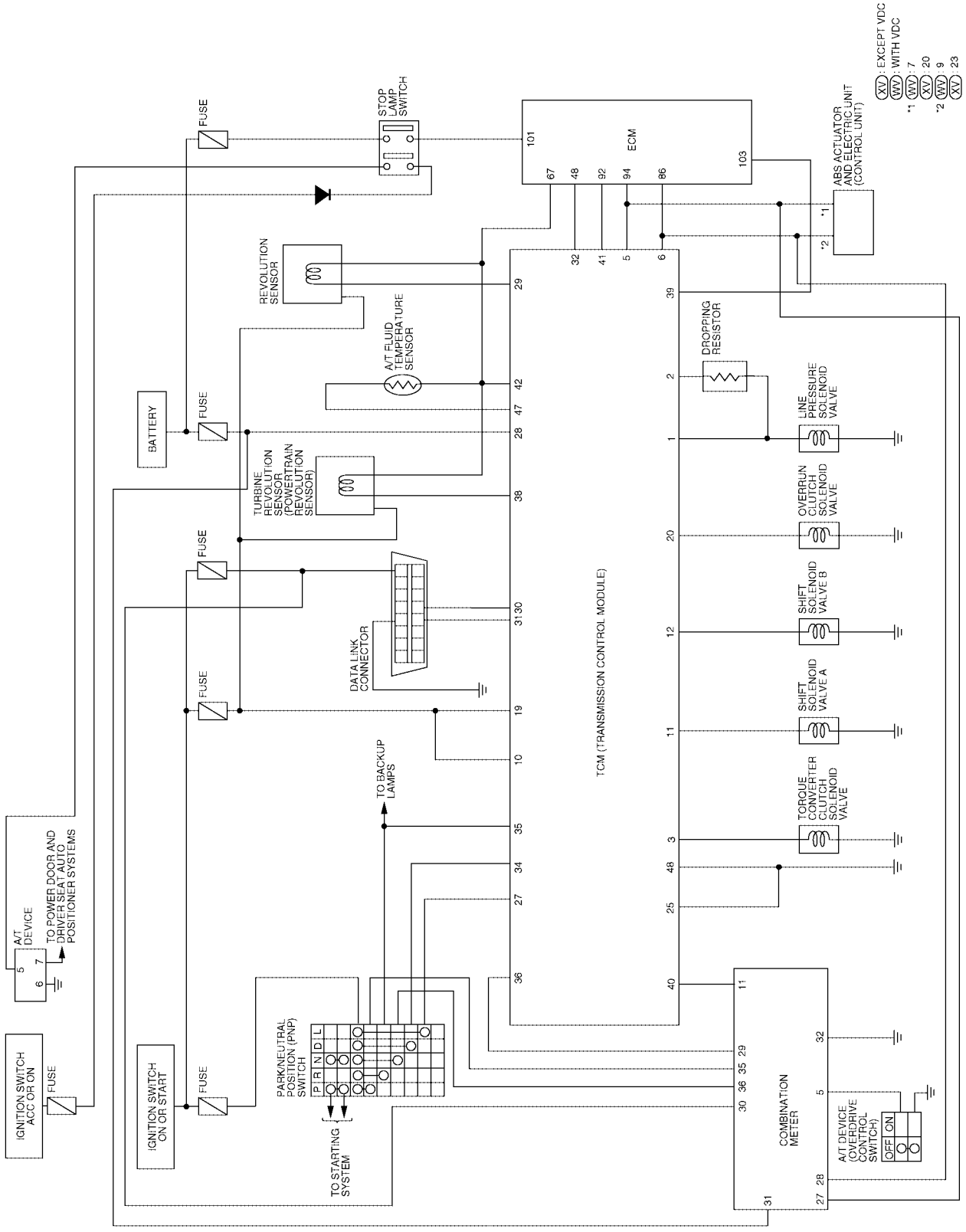

BCWA0168E

Cross-sectional View

UCS000MI

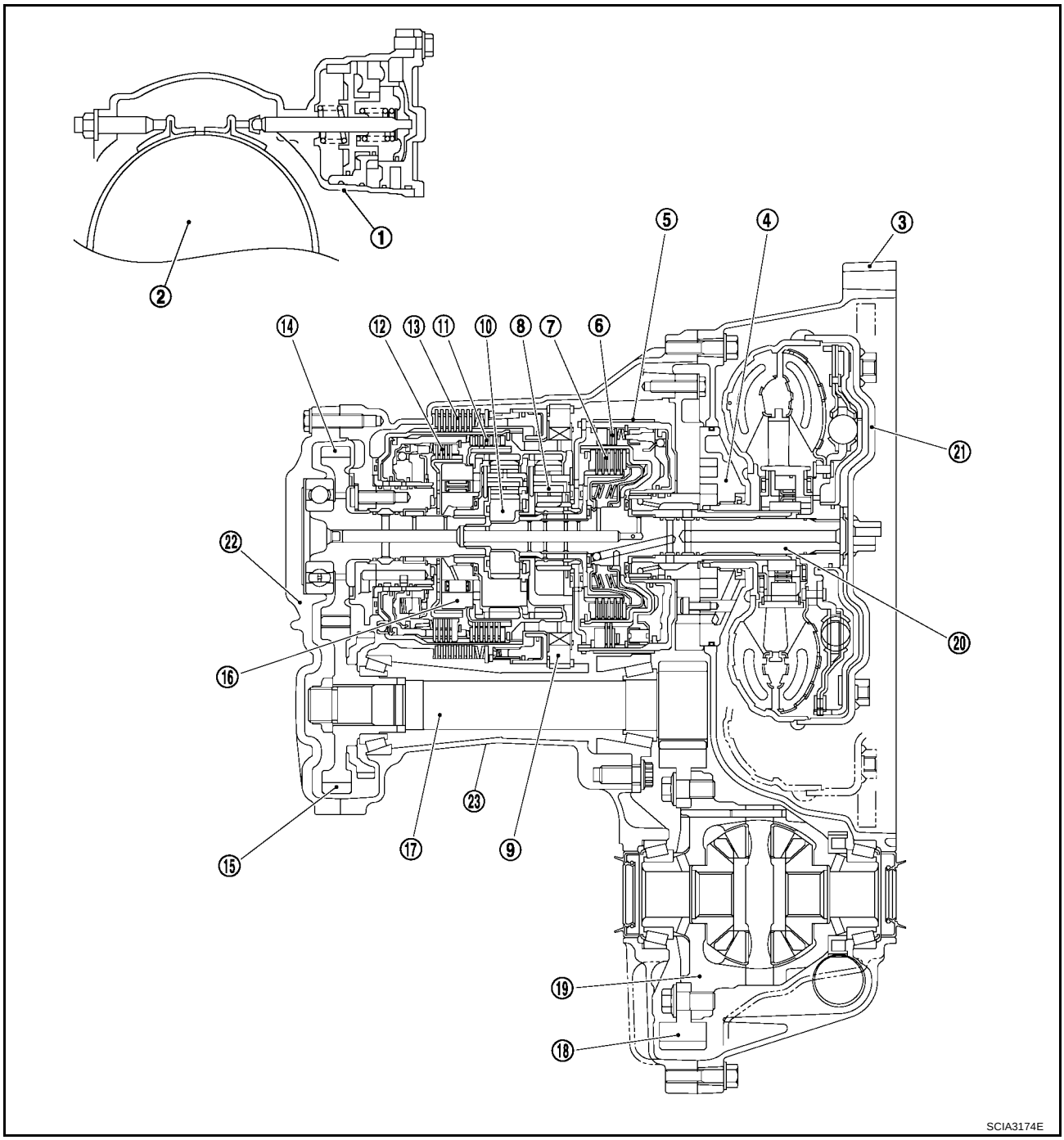

1.	Band servo piston	2.	Reverse clutch drum	3.	Converter housing
4.	Oil pump	5.	Brake band	6.	Reverse clutch
7.	High clutch	8.	Front planetary gear	9.	Low one-way clutch
10.	Rear planetary gear	11.	Forward clutch	12.	Overrun clutch
13.	Low & reverse brake	14.	Output gear	15.	Idler gear
16.	Forward one-way clutch	17.	Pinion reduction gear	18.	Final gear
19.	Differential case	20.	Input shaft	21.	Torque converter
22.	Side cover	23.	Transaxle case		

Hydraulic Control Circuit

UCS000MJ

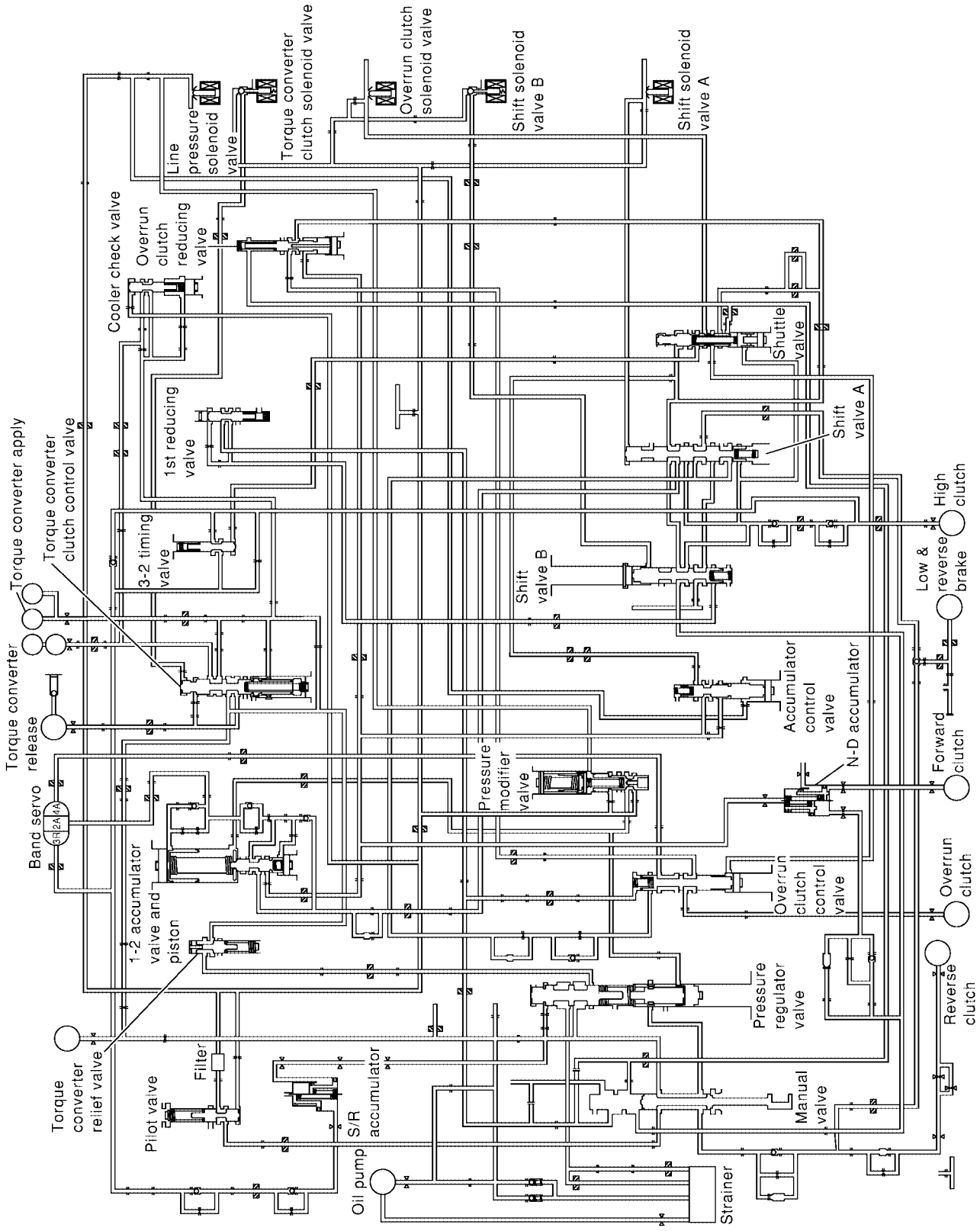

SAT489K

Shift Mechanism

UCS000MK

CONSTRUCTION

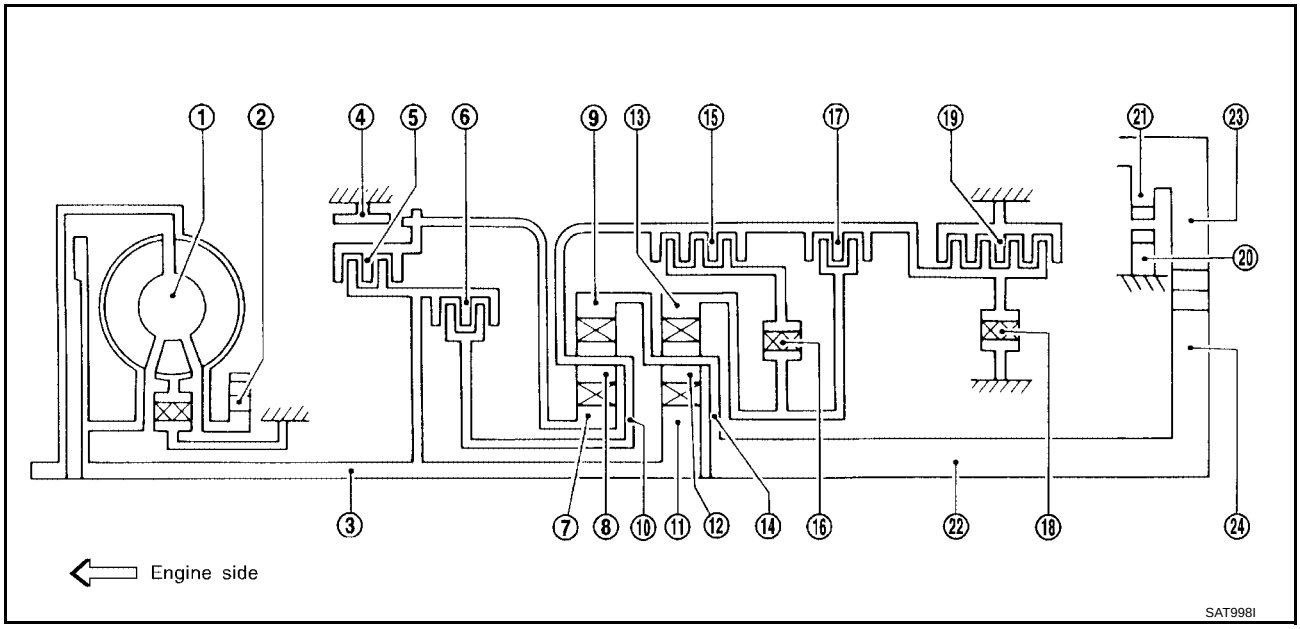

1. Torque converter
2. Oil pump
3. Input shaft
4. Brake band
5. Reverse clutch
6. High clutch
7. Front sun gear
8. Front pinion gear
9. Front internal gear
10. Front planetary carrier
11. Rear sun gear
12. Rear pinion gear
13. Rear internal gear
14. Rear planetary carrier
15. Forward clutch
16. Forward one-way clutch
17. Overrun clutch
18. Low one-way clutch
19. Low & reverse brake
20. Parking pawl
21. Parking gear
22. Output shaft
23. Idle gear
24. Output gear

FUNCTION OF CLUTCH AND BRAKE

Clutch and brake components	Abbr.	Function
Reverse clutch **5**	R/C	To transmit input power to front sun gear **7** .
High clutch **6**	H/C	To transmit input power to front planetary carrier **10** .
Forward clutch **15**	F/C	To connect front planetary carrier **10** with forward one-way clutch **16** .
Overrun clutch **17**	O/C	To connect front planetary carrier **10** with rear internal gear **13** .
Brake band **4**	B/B	To lock front sun gear **7** .
Forward one-way clutch **16**	F/O.C	When forward clutch **15** is engaged, to stop rear internal gear **13** from rotating in opposite direction against engine revolution.
Low one-way clutch **18**	L/O.C	To stop front planetary carrier **10** from rotating in opposite direction against engine revolution.
Low & reverse brake **19**	L & R/B	To lock front planetary carrier **10** .

CLUTCH AND BAND CHART

Shift position		Reverse clutch **5**	High clutch **6**	Forward clutch **15**	Overrun clutch **17**	Band servo 2nd apply	Band servo 3rd release	Band servo 4th apply	Forward one-way clutch **16**	Low one-way clutch **18**	Low & reverse brake **19**	Lock-up	Remarks
P													PARK POSITION
R		O									O		REVERSE POSITION
N													NEUTRAL POSITION
D*4	1st			O	*1D				B	B			Automatic shift 1 ⇔ 2 ⇔ 3 ⇔ 4
	2nd			O	*1 A	O			B				
	3rd		O	O	*1 A	*2C	C		B			*1O	
	4th		O	C		*3C	C	O				O	
L	1st			O	O				B	B			Automatic shift 1 ⇔ 2 ⇐ 3
	2nd			O	O	O			B				
	3rd		O	O	O	*2C	C		B				

*1: Operates when overdrive control switch is set in “OFF” position.
*2: Oil pressure is applied to both 2nd “apply” side and 3rd “release” side of band servo piston. However, brake band does not contract because oil pressure area on the “release” side is greater than that on the “apply” side.
*3: Oil pressure is applied to 4th “apply” side in condition *2 above, and brake band contracts.
*4: A/T will not shift to 4th when selector lever is set in 3 position.
O: Operates
A: Operates when throttle opening is less than 3/16, activating engine brake.
B: Operates during “progressive” acceleration.
C: Operates but does not affect power transmission.
D: Operates when throttle opening is less than 3/16, but does not affect engine brake.

POWER TRANSMISSION

P and N Positions

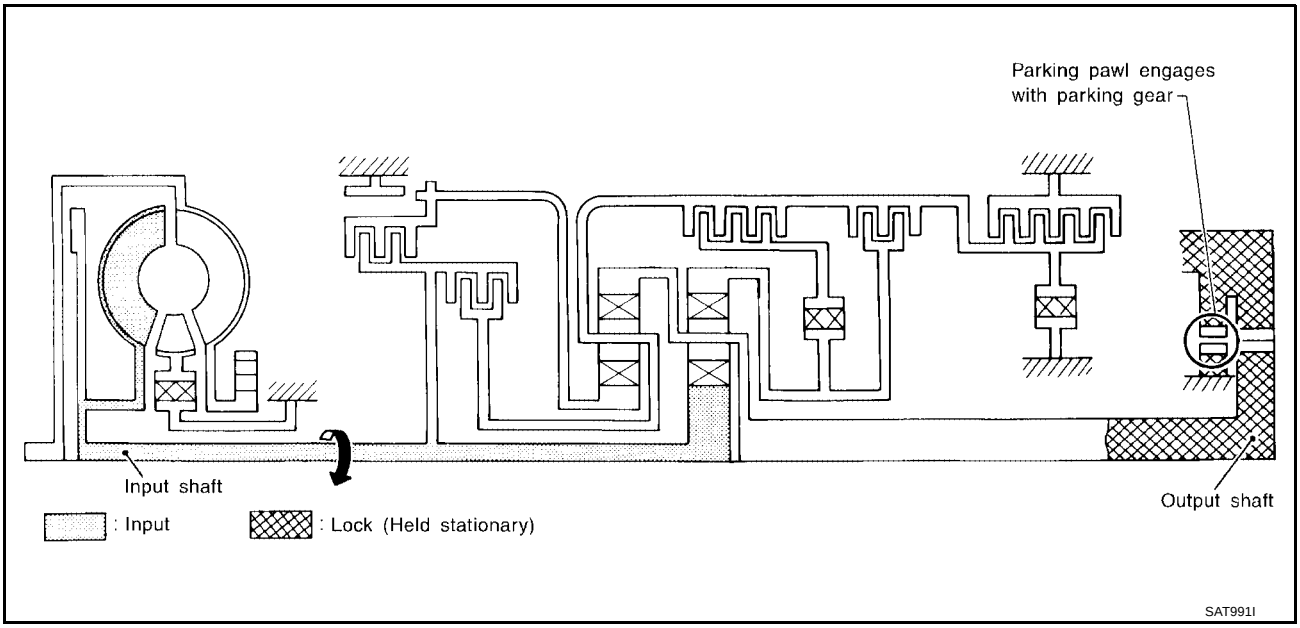

- P position
  Similar to the N position, the clutches do not operate. The parking pawl engages with the parking gear to mechanically hold the output shaft so that the power train is locked.
- N position
  Power from the input shaft is not transmitted to the output shaft because the clutches do not operate.

D1 and L1 Positions

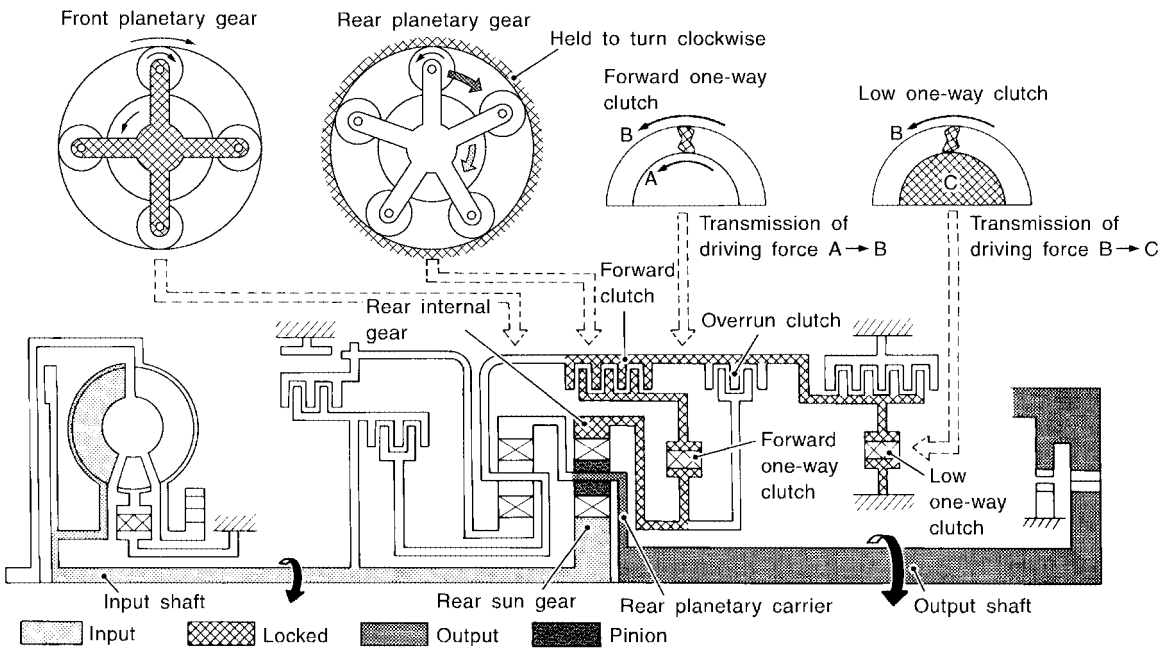

Power flow

Input shaft
⇩
Rear sun gear
⇩
Rear pinion gear
⇩
Rear planetary carrier → Output shaft

SCIA3325E

● **Forward one-way clutch** ● **Forward clutch** ● **Low one-way clutch**	Rear internal gear is locked to rotate counterclockwise because of the functioning of these three clutches.
Overrun clutch engagement conditions (Engine brake)	D1 : Overdrive control switch “OFF” and throttle opening is less than 3/16 L1 : Always engaged At D1 and L1 positions, engine brake is not activated due to free turning of low one-way clutch.

D2 and L2 Positions

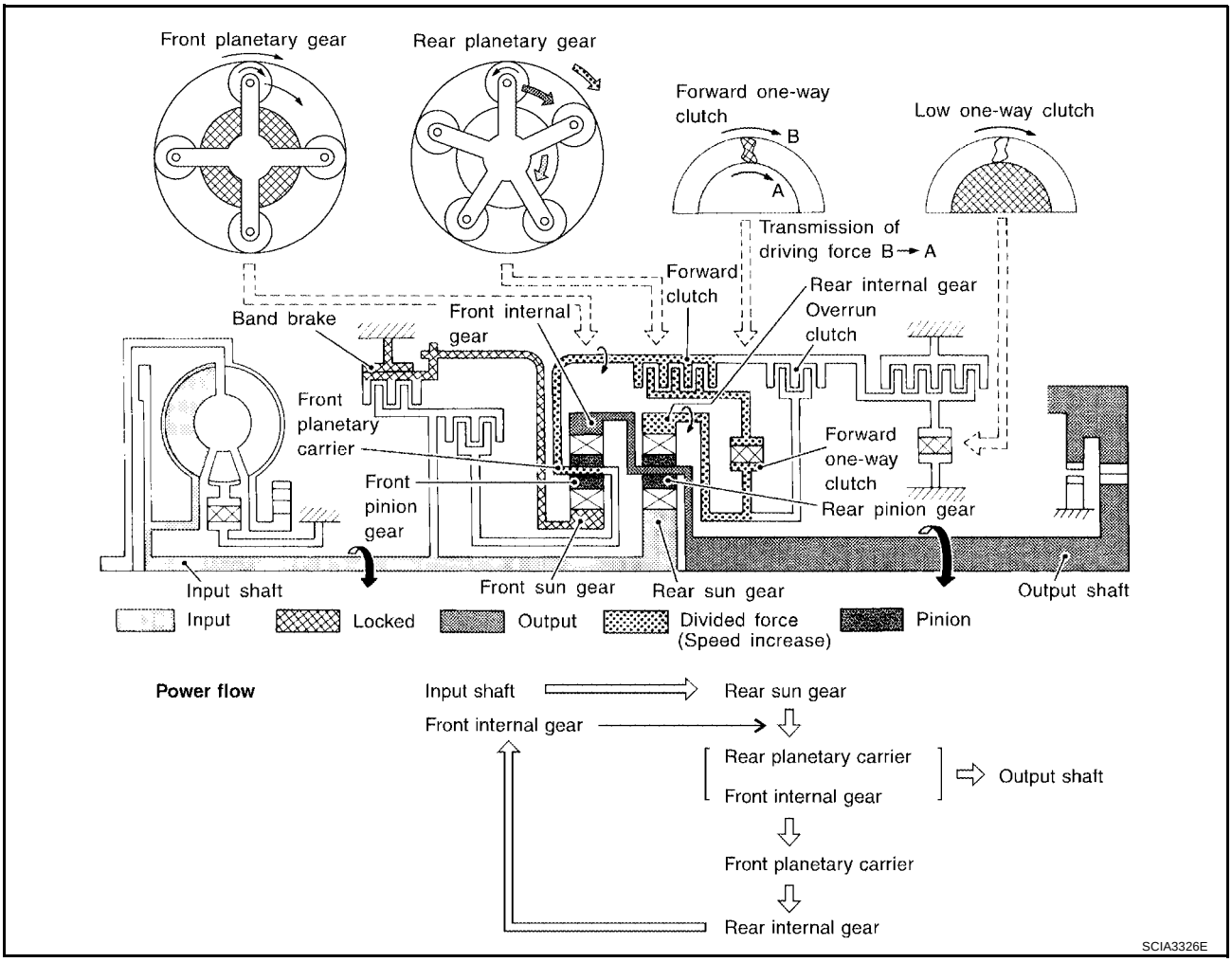

● **Forward clutch** ● **Forward one-way clutch** ● **Brake band**	Rear sun gear drives rear planetary carrier and combined front internal gear. Front internal gear now rotates around front sun gear accompanying front planetary carrier. As front planetary carrier transfers the power to rear internal gear through forward clutch and forward one-way clutch, this rotation of rear internal gear increases the speed of rear planetary carrier compared with that of the 1st speed.
Overrun clutch engagement conditions	D2 : Overdrive control switch “OFF” and throttle opening is less than 3/16 L2 : Always engaged

D3 and L3 Positions

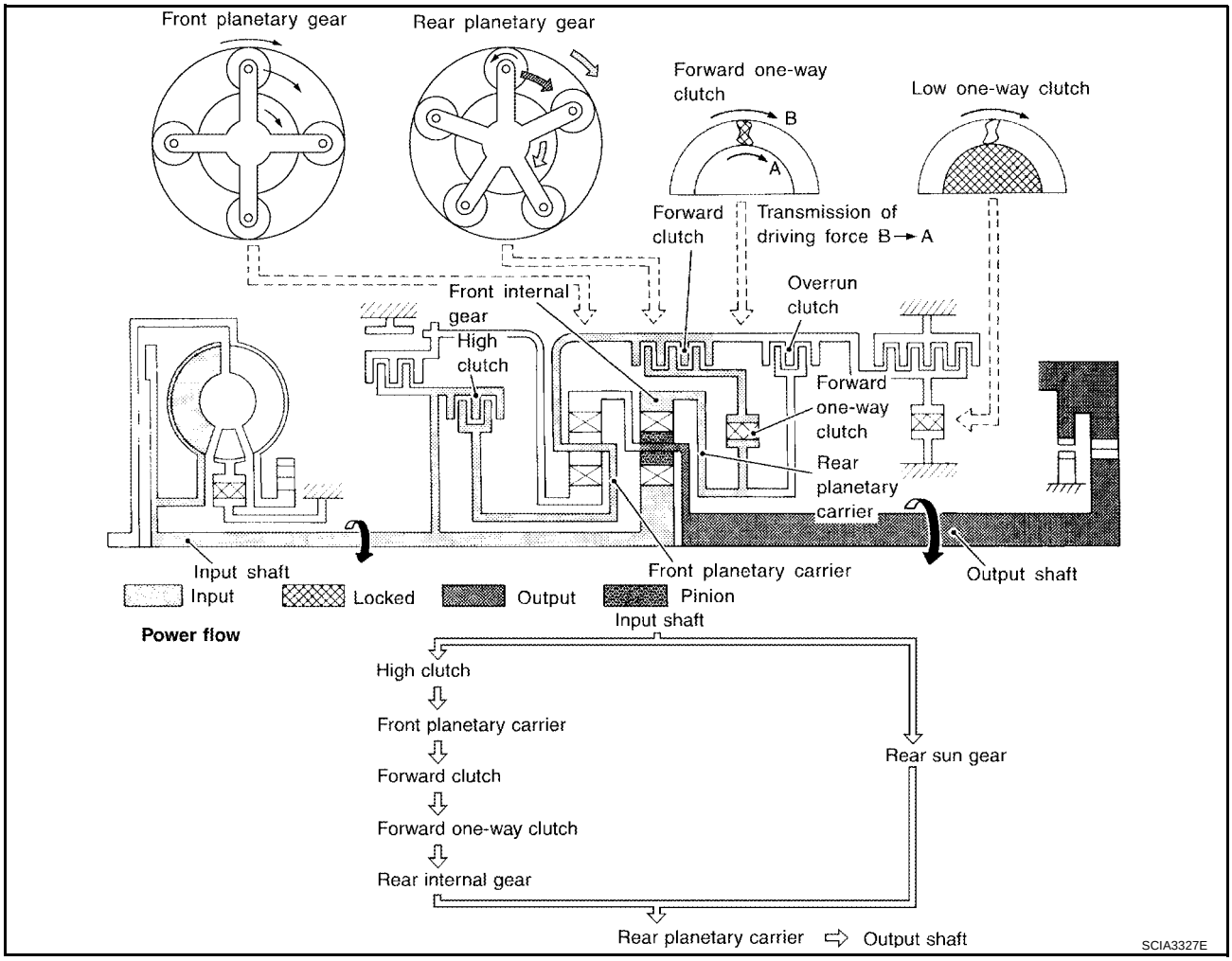

● **High clutch** ● **Forward clutch** ● **Forward one-way clutch**	Input power is transmitted to front planetary carrier through high clutch. And front planetary carrier is connected to rear internal gear by operation of forward clutch and forward one-way clutch. This rear internal gear rotation and another input (the rear sun gear) accompany rear planetary carrier to turn at the same speed.
Overrun clutch engagement conditions	D3 : Overdrive control switch “OFF” and throttle opening is less than 3/16 L3 : Always engaged

D4 Position

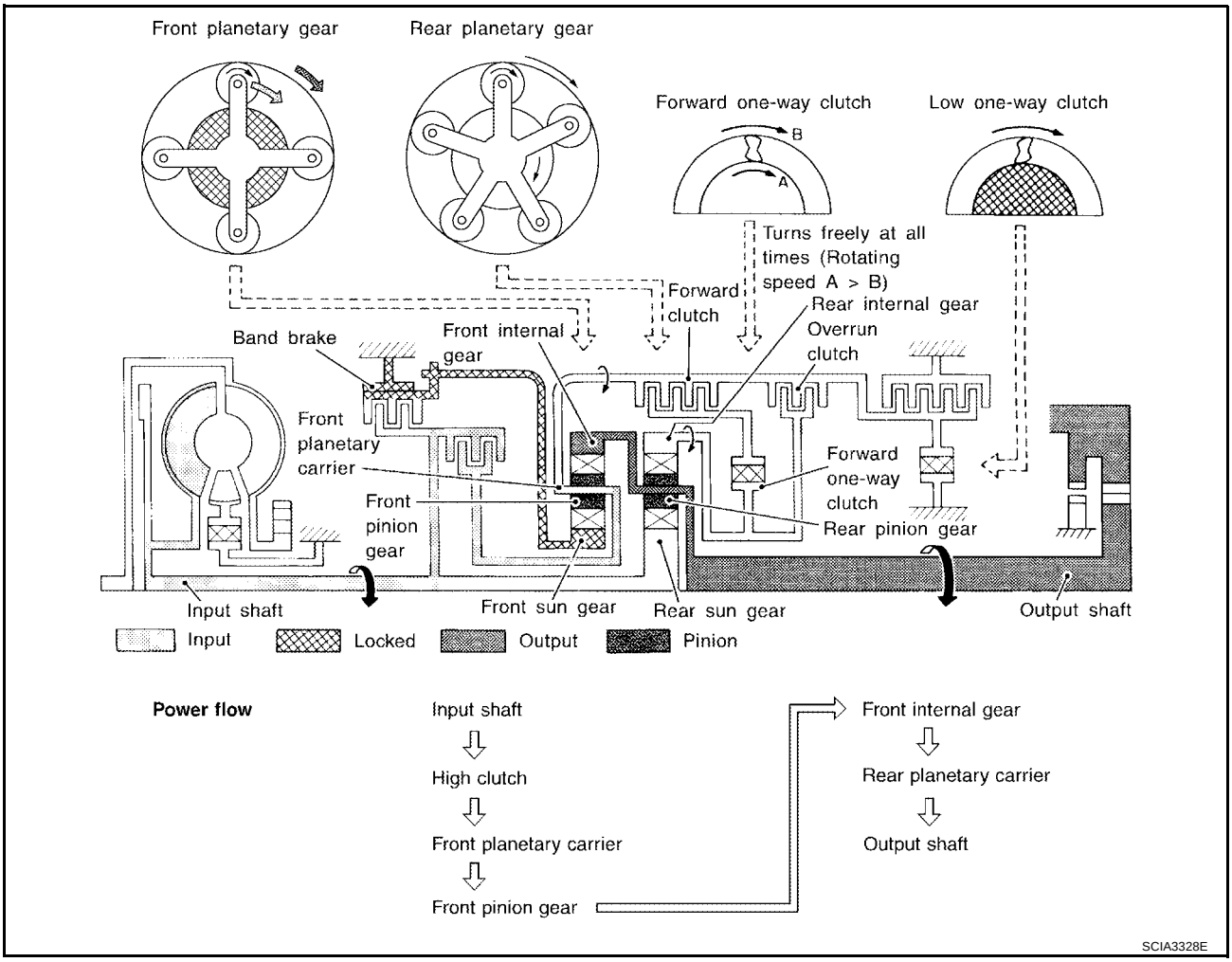

● **High clutch** ● **Brake band** ● **Forward clutch** (Does not affect power transmission)	Input power is transmitted to front carrier through high clutch. This front carrier turns around the sun gear which is fixed by brake band and makes front internal gear (output) turn faster.
Engine brake	At D4 position, there is no one-way clutch in the power transmission line and engine brake can be obtained when decelerating.

R Position

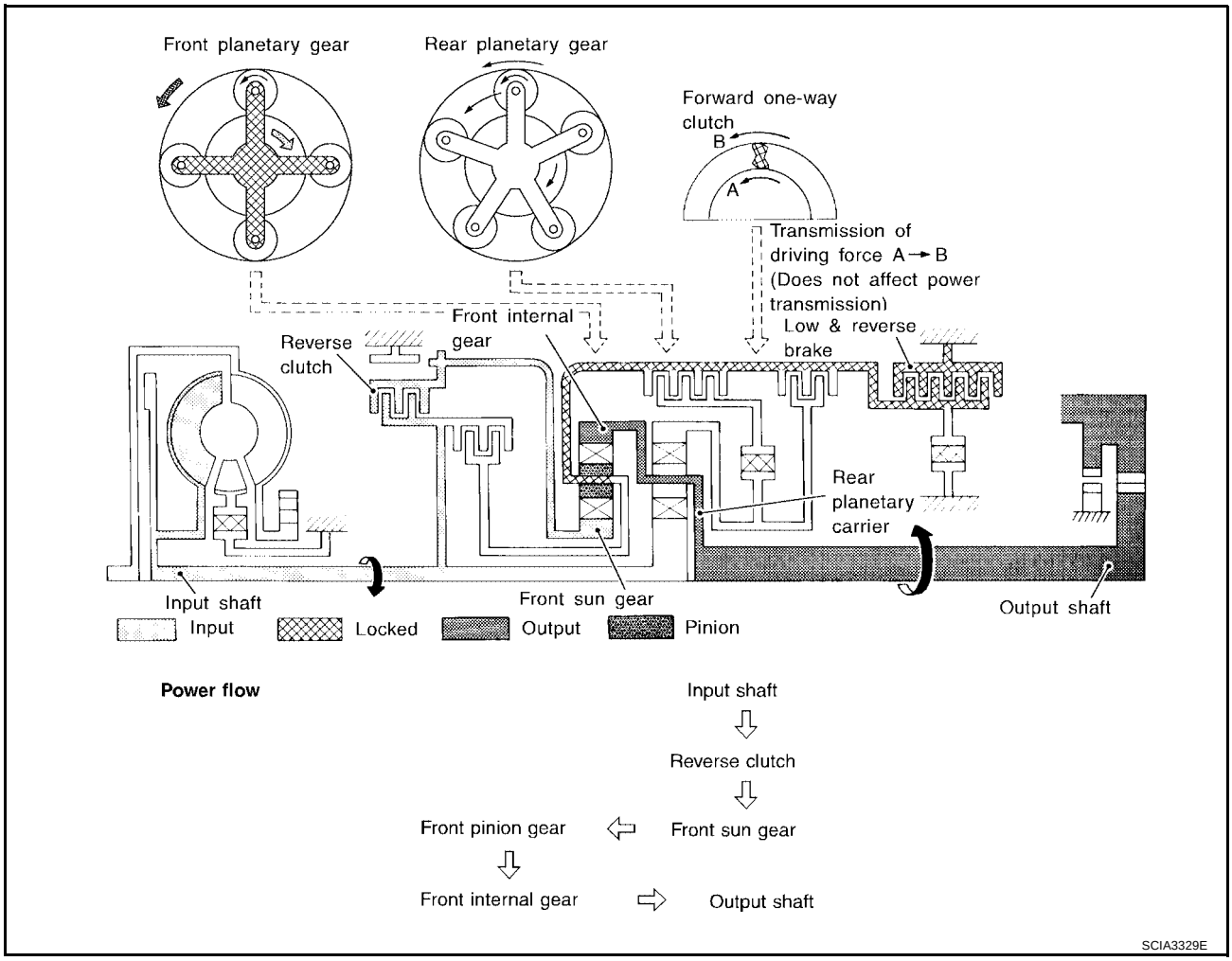

● **Reverse clutch** ● **Low & reverse brake**	Front planetary carrier is stationary because of the operation of low & reverse brake. Input power is transmitted to front sun gear through reverse clutch, which drives front internal gear in the opposite direction.
Engine brake	As there is no one-way clutch in the power transmission line, engine brake can be obtained when decelerating.

Control System

UCS000ML

OUTLINE

The automatic transaxle senses vehicle operating conditions through various sensors. It always controls the optimum shift position and reduces shifting and lock-up shocks.

SENSORS (or SIGNALS)		TCM		ACTUATORS
Park/neutral position (PNP) switch Accelerator pedal position (APP) sensor Engine speed signal A/T fluid temperature sensor Revolution sensor Vehicle speed signal Overdrive control switch ASCD control signal Stop lamp switch Turbine revolution sensor (power train revolution sensor)	▶	Shift control Line pressure control Lock-up control Overrun clutch control Timing control Fail-safe control Self-diagnosis CAN communication line control	▶	Shift solenoid valve A Shift solenoid valve B Overrun clutch solenoid valve Torque converter clutch solenoid valve Line pressure solenoid valve O/D OFF indicator lamp

CONTROL SYSTEM

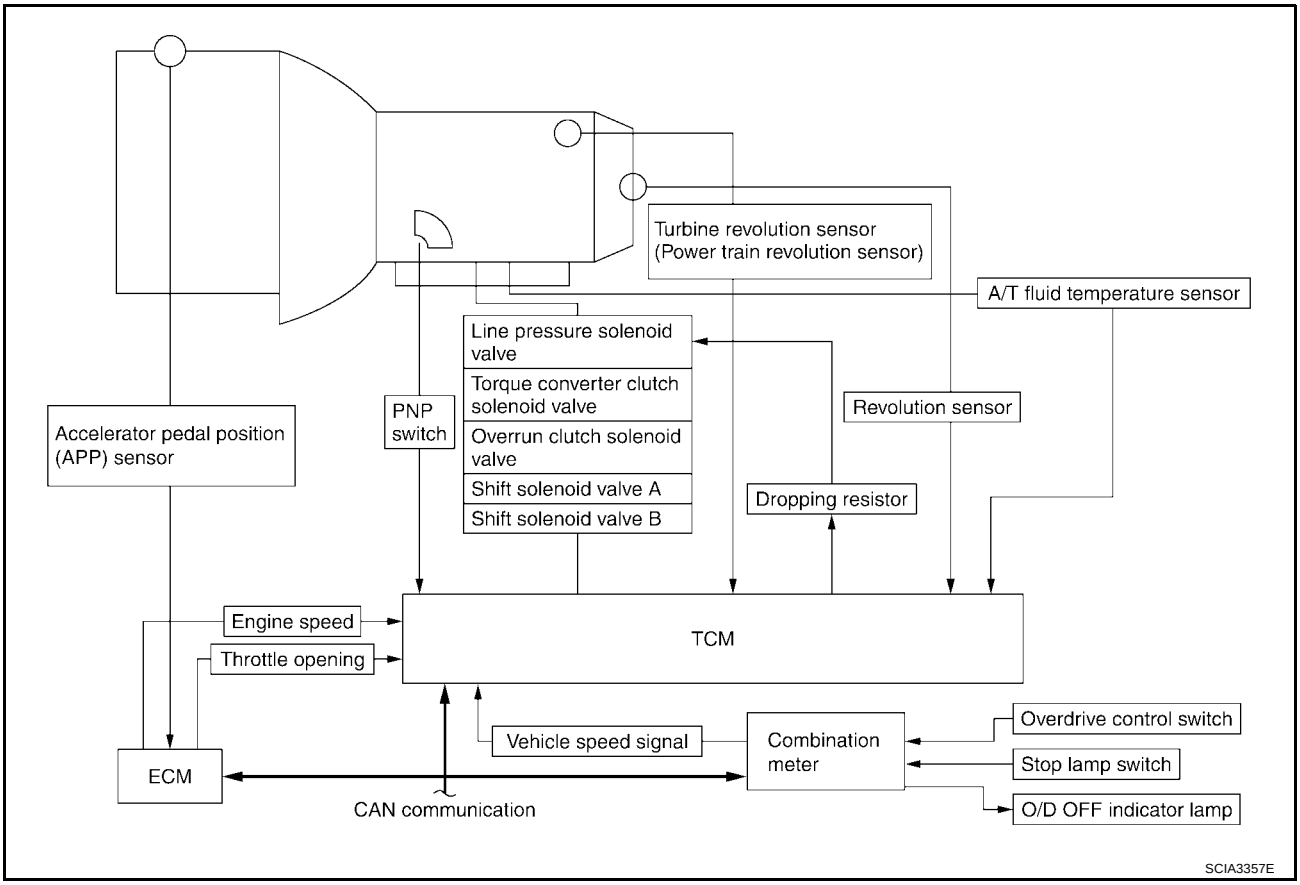

TCM FUNCTION

The function of the TCM is to:

- Receive input signals sent from various switches and sensors.
- Determine required line pressure, shifting point, lock-up operation, and engine brake operation.
- Send required output signals to the respective solenoids.

INPUT/OUTPUT SIGNAL OF TCM

	Sensors and solenoid valves	Function
Input	Park/neutral position (PNP) switch	Detects select lever position and sends a signal to TCM.
	Accelerator pedal position (APP) sensor	Detects throttle valve position and sends a signal to TCM.
	Closed throttle position signal	Detects throttle valves fully-closed position and sends a signal from ECM to TCM.
	Wide open throttle position signal	Detects throttle valve position of greater than 1/2 or full throttle and sends a signal from ECM to TCM.
	Engine speed signal	Receives signal from ECM.
	A/T fluid temperature sensor	Detects transmission fluid temperature and sends a signal to TCM.
	Revolution sensor	Detects output shaft rpm and sends a signal to TCM.
	Vehicle speed sensor	Used as an auxiliary vehicle speed sensor. Sends a signal when revolution sensor (installed on transmission) malfunctions.
	Overdrive control switch	Sends a signal, which prohibits a shift to D_4 (overdrive) position, to the TCM.
	ASCD control signal	Sends the cruise signal and D_4 (overdrive) cancellation signal from ECM to TCM.
	Turbine revolution sensor (power train revolution sensor)	Detects forward clutch drum rpm and sends a signal to TCM.
	Stop lamp switch	Send the lock-up release signal to the TCM at time of D_4 (lock-up).
Output	Shift solenoid valve A/B	Selects shifting point suited to driving conditions in relation to a signal sent from TCM.
	Line pressure solenoid valve	Regulates (or decreases) line pressure suited to driving conditions in relation to a signal sent from TCM.
	Torque converter clutch solenoid valve	Regulates (or decreases) lock-up pressure suited to driving conditions in relation to a signal sent from TCM.
	Overrun clutch solenoid valve	Controls an “engine brake” effect suited to driving conditions in relation to a signal sent from TCM.
	O/D OFF indicator lamp	Shows TCM faults, when A/T control components malfunction.

CAN Communication

UCS0015M

SYSTEM DESCRIPTION

CAN (Controller Area Network) is a serial communication line for real time application. It is an on-vehicle multiplex communication line with high data communication speed and excellent error detection ability. Many electronic control units are equipped onto a vehicle, and each control unit shares information and links with other control units during operation (not independent). In CAN communication, control units are connected with 2 communication lines (CAN H line, CAN L line) allowing a high rate of information transmission with less wiring. Each control unit transmits/receives data but selectively reads required data only.
For details, refer to LAN-6, "CAN COMMUNICATION" .

Control Mechanism

UCS000MM

LINE PRESSURE CONTROL

TCM has various line pressure control characteristics to meet the driving conditions.
An ON-OFF duty signal is sent to the line pressure solenoid valve based on TCM characteristics.
Hydraulic pressure on the clutch and brake is electronically controlled through the line pressure solenoid valve to accommodate engine torque. This results in smooth shift operation.

Normal Control

The line pressure to throttle opening characteristics is set for suitable clutch operation.

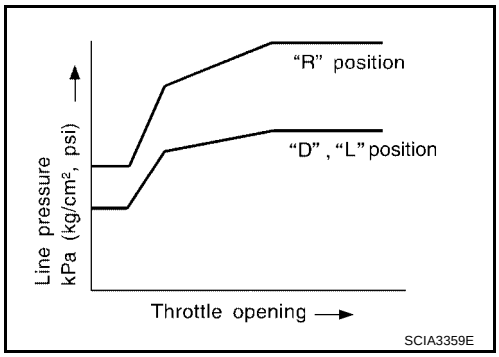

Back-up Control (Engine brake)

If the selector lever is shifted to L position while driving in D4 (O/D) or D3 , great driving force is applied to the clutch inside the transmission. Clutch operating pressure (line pressure) must be increased to deal with this driving force.

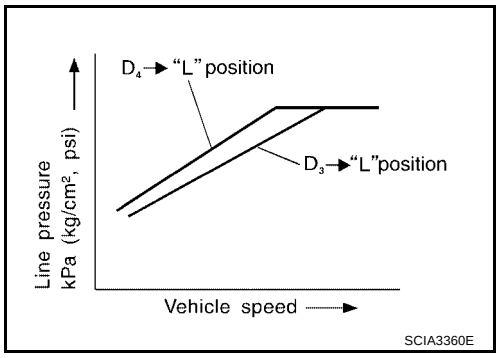

During Shift Change

The line pressure is temporarily reduced corresponding to a change in engine torque when shifting gears (that is, when the shift solenoid valve is switched for clutch operation) to reduce shifting shock.

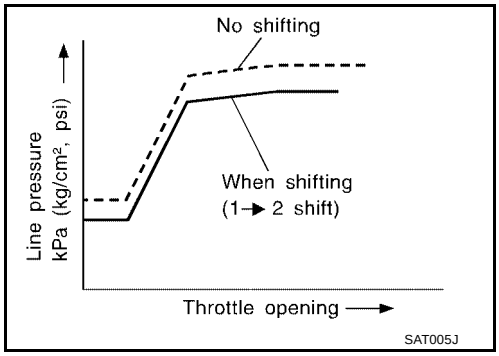

At Low Fluid Temperature

- Fluid viscosity and frictional characteristics of the clutch facing change with fluid temperature. Clutch engaging or band-contacting pressure is compensated for, according to fluid temperature, to stabilize shifting quality.

- The line pressure is reduced below 60°C (140°F) to prevent shifting shock due to low viscosity of automatic transmission fluid when temperature is low.

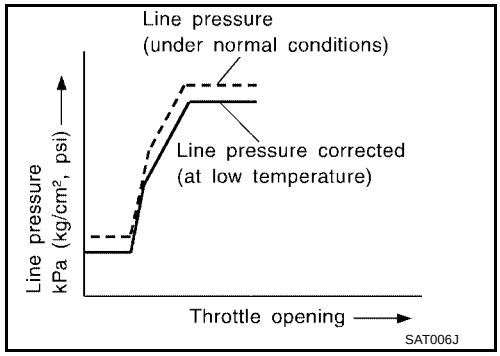

- Line pressure is increased to a maximum irrespective of the throttle opening when fluid temperature drops to –10°C (14°F). This pressure rise is adopted to prevent a delay in clutch and brake operation due to extreme drop of fluid viscosity at low temperature.

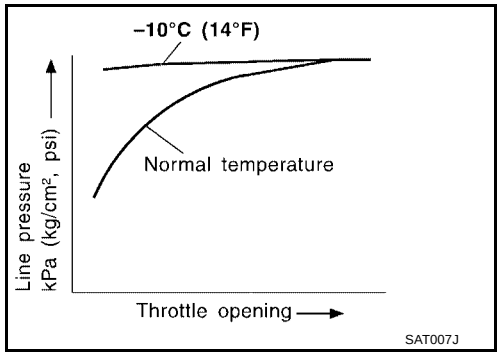

SHIFT CONTROL

The shift is regulated entirely by electronic control to accommodate vehicle speed and varying engine operations. This is accomplished by electrical signals transmitted by the revolution sensor and the ECM (throttle opening). This results in improved acceleration performance and fuel economy.

Control of Shift Solenoid Valves A and B

The shift solenoid valve performs simple ON-OFF operation. When set to ON, the drain circuit closes and pilot pressure is applied to the shift valve.
The TCM activates shift solenoid valves A and B according to signals from the ECM (throttle opening) and revolution sensor to select the optimum gear position on the basis of the shift schedule memorized in the TCM.

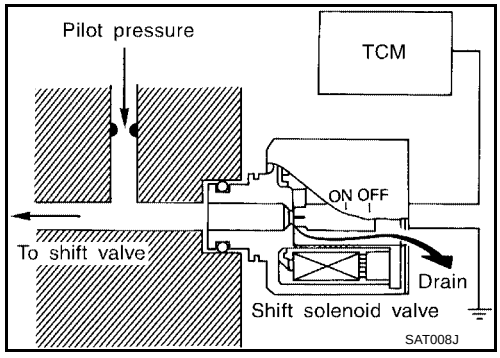

Relation between shift solenoid valves A and B and gear positions

Shift solenoid valve	Gear position				
	D_1 , L_1	D_2 , L_2	D_3	D_4 (O/D)	N-P
A	ON (Closed)	OFF (Open)	OFF (Open)	ON (Closed)	ON (Closed)
B	ON (Closed)	ON (Closed)	OFF (Open)	OFF (Open)	ON (Closed)

Control of Shift Valves A and B

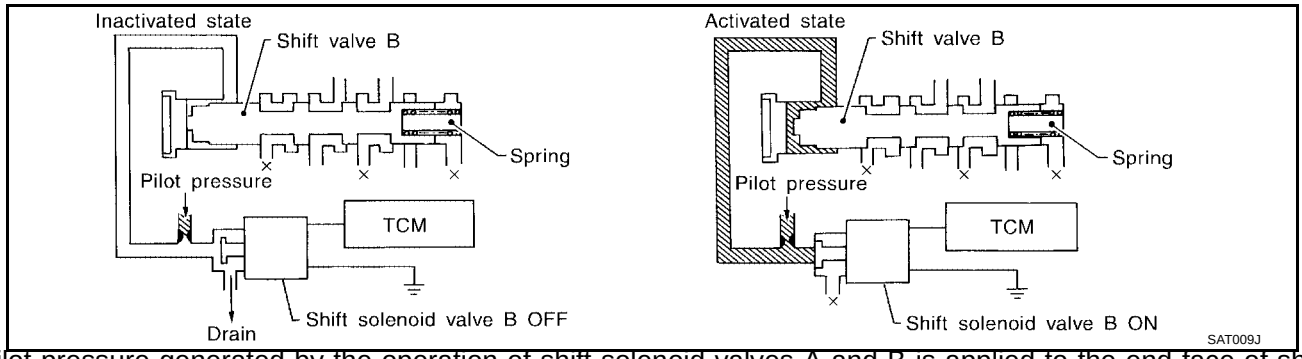

Pilot pressure generated by the operation of shift solenoid valves A and B is applied to the end face of shift valves A and B.

The drawing above shows the operation of shift valve B. When the shift solenoid valve is ON, pilot pressure applied to the end face of the shift valve overcomes spring force, moving the valve upward.

LOCK-UP CONTROL

The torque converter clutch piston in the torque converter is locked to eliminate torque converter slip to increase power transmission efficiency. The solenoid valve is controlled by an ON-OFF duty signal sent from the TCM. The signal is converted to an oil pressure signal which controls the lock-up piston.

Conditions for Lock-up Operation

When vehicle is driven in 3rd or 4th gear positions, vehicle speed and throttle opening are detected. If the detected values fall within the lock-up zone memorized in the TCM, lock-up is performed.

Selector lever	D position	
Overdrive control switch	ON	OFF
Gear position	D_4	D_3
Vehicle speed sensor	More than set value	
ECM (throttle opening)	Less than set opening	
Closed throttle position signal	OFF	
A/T fluid temperature sensor	More than 20°C (68°F)	

Torque Converter Clutch Control Valve Control

LOCK-UP CONTROL SYSTEM DIAGRAM

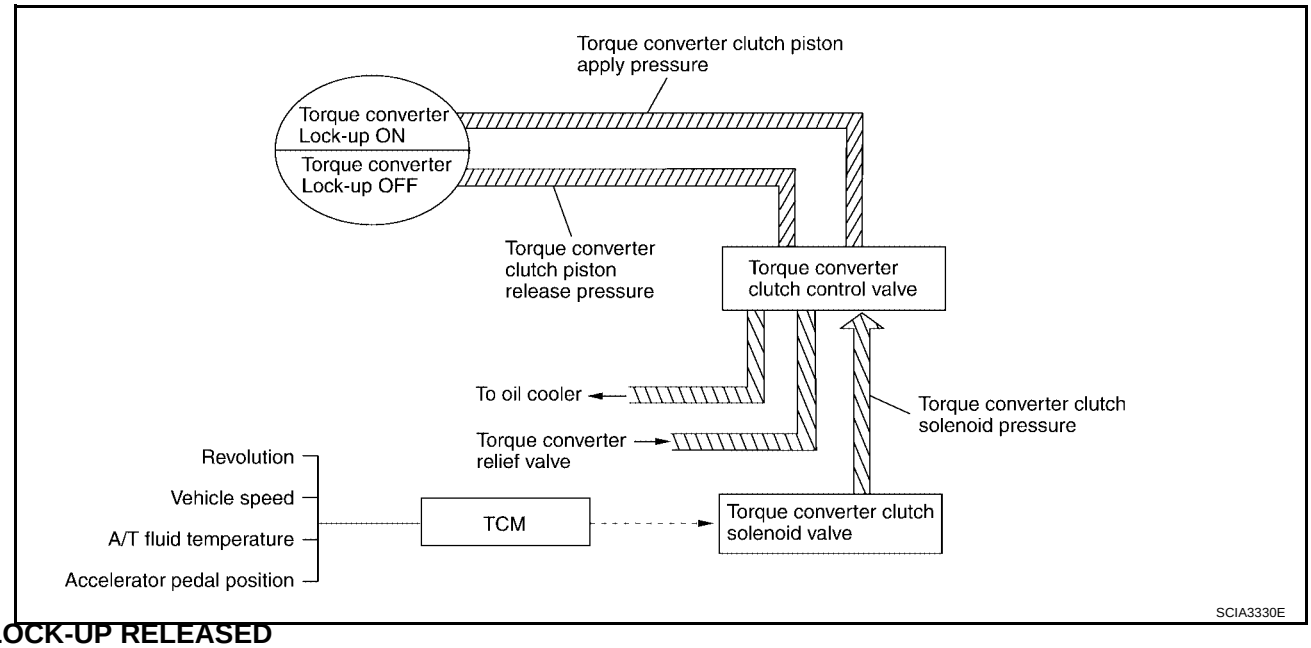

LOCK-UP RELEASED

In the lock-up released state, the torque converter clutch control valve is set into the unlocked state by the torque converter clutch solenoid and the lock-up apply pressure is drained and the torque converter clutch piston release pressure is generated.

In this way, the torque converter clutch piston is not coupled.

LOCK-UP APPLIED

In the lock-up applied state, the torque converter clutch control valve is set into the locked state by the torque converter clutch solenoid and lock-up apply pressure is generated and the torque converter clutch piston release pressure is drained.

In this way, the torque converter clutch piston is pressed and coupled.

Smooth Lock-up Control

When shifting from the lock-up released state to the lock-up applied state, the current output to the torque converter clutch solenoid is controlled with the TCM. In this way, when shifting to the lock-up applied state, the torque converter clutch is temporarily set to the half-clutched state to reduce the shock.

HALF-CLUTCHED STATE

The current output from the TCM to the torque converter clutch solenoid is varied to steadily increase the torque converter clutch solenoid pressure.

In this way, the lock-up apply pressure gradually rises and while the torque converter clutch piston is put into half-clutched status, the torque converter clutch piston operating pressure is increased and the coupling is completed smoothly.

OVERRUN CLUTCH CONTROL (ENGINE BRAKE CONTROL)

Forward one-way clutch is used to reduce shifting shocks in downshifting operations. This clutch transmits engine torque to the wheels. However, drive force from the wheels is not transmitted to the engine because the one-way clutch rotates idle. This means the engine brake is not effective.
The overrun clutch operates when the engine brake is needed.

Overrun Clutch Operating Conditions

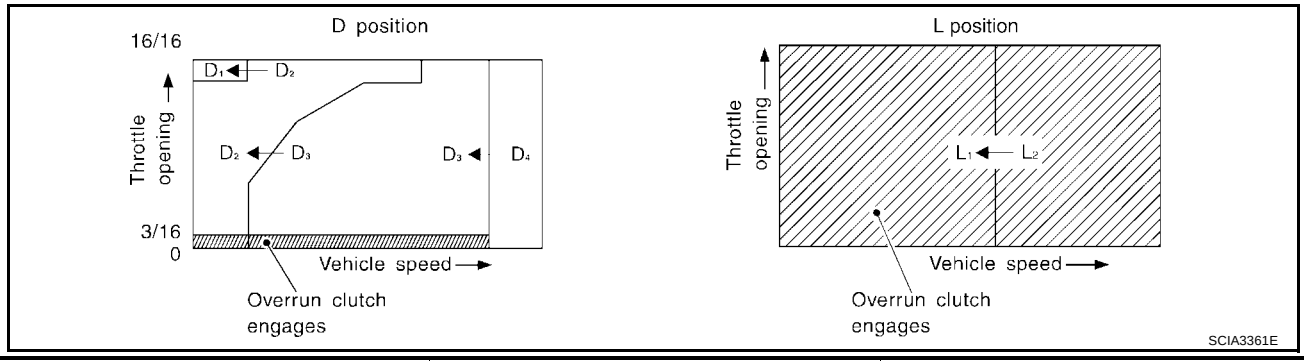

Selector lever position	Gear position	Throttle opening
D position	D_1 , D_2 , D_3 gear position	Less than 3/16
L position	L_1 , L_2 gear position	At any position

Overrun Clutch Solenoid Valve Control

The overrun clutch solenoid valve is operated by an ON-OFF signal transmitted by the TCM to provide overrun clutch control (engine brake control).
When this solenoid valve is ON, the pilot pressure drain port closes. When it is OFF, the drain port opens.
During the solenoid valve ON pilot pressure is applied to the end face of the overrun clutch control valve.

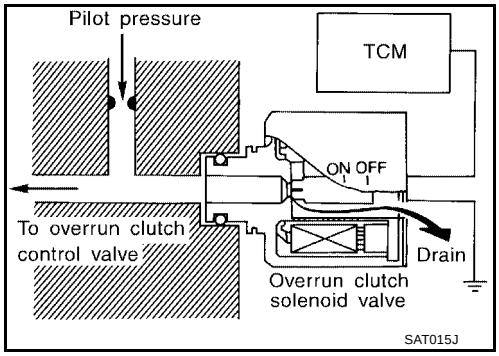

Overrun Clutch Control Valve Operation

When the solenoid valve is ON, pilot pressure is applied to the overrun clutch control valve. This pushes up the overrun clutch control valve. The line pressure is then shut off so that the clutch does not engage.
When the solenoid valve is OFF, pilot pressure is not generated. At this point, the overrun clutch control valve moves downward by spring force. As a result, overrun clutch operation pressure is provided by the overrun clutch reducing valve. This causes the overrun clutch to engage.
In the L position, the overrun clutch control valve remains pushed down so that the overrun clutch is engaged at all times.

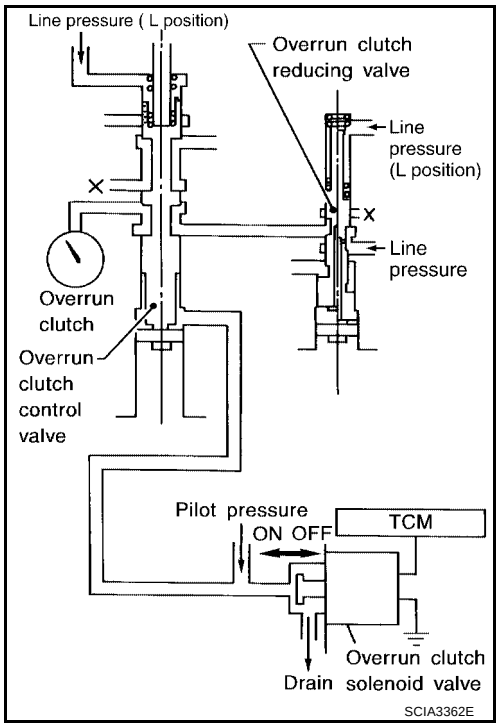

Control Valve

UCS000MN

FUNCTION OF CONTROL VALVES

Valve name	Function
Pressure regulator valve, plug and sleeve plug	Regulates oil discharged from the oil pump to provide optimum line pressure for all driving conditions.
Pressure modifier valve and sleeve	Used as a signal supplementary valve to the pressure regulator valve. Regulates pressure-modifier pressure (signal pressure) which controls optimum line pressure for all driving conditions.
Pilot valve	Regulates line pressure to maintain a constant pilot pressure level which controls lock-up mechanism, overrun clutch, shift timing.
Accumulator control valve	Regulates accumulator back-pressure to pressure suited to driving conditions.
Manual valve	Directs line pressure to oil circuits corresponding to select positions. Hydraulic pressure drains when the shift lever is in Neutral.
Shift valve A	Simultaneously switches three oil circuits using output pressure of shift solenoid valve A to meet driving conditions (vehicle speed, throttle opening, etc.). Provides automatic downshifting and up-shifting (1st → 2nd → 3rd → 4th gears/4th → 3rd → 2nd → 1st gears) in combination with shift valve B.
Shift valve B	Simultaneously switches two oil circuits using output pressure of shift solenoid valve B in relation to driving conditions (vehicle speed, throttle opening, etc.). Provides automatic downshifting and up-shifting (1st → 2nd → 3rd → 4th gears/4th → 3rd → 2nd → 1st gears) in combination with shift valve A.
Overrun clutch control valve	Switches hydraulic circuits to prevent engagement of the overrun clutch simultaneously with application of the brake band in D_4 . (Interlocking occurs if the overrun clutch engages during D_4 .)
“1” reducing valve	Reduces low & reverse brake pressure to dampen engine-brake shock when down-shifting from the L position L_2 to L_1 .
Overrun clutch reducing valve	Reduces oil pressure directed to the overrun clutch and prevents engine-brake shock. In 1st and 2nd positions, line pressure acts on the overrun clutch reducing valve to increase the pressure-regulating point, with resultant engine brake capability.
Torque converter relief valve	Prevents an excessive rise in torque converter pressure.
Torque converter clutch control valve, plug and sleeve	Activates or inactivates the lock-up function. Also provides smooth lock-up through transient application and release of the lock-up system.
1-2 accumulator valve and piston	Dampens the shock encountered when 2nd gear band servo contracts, and provides smooth shifting.
3-2 timing valve	Switches the pace that oil pressure is released depending on vehicle speed; maximizes the high clutch release timing, and allows for soft down shifting.
Shuttle valve	Determines if the overrun clutch solenoid valve should control the 3-2 timing valve or the overrun clutch control valve and switches between the two.
Cooler check valve	At low speeds and with a small load when little heat is generated, saves the volume of cooler flow, and stores the oil pressure for lock up.

ON BOARD DIAGNOSTIC SYSTEM DESCRIPTION

PFP:00000

Introduction

UCS000MO

The A/T system has two self-diagnostic systems.
The first is the emission-related on board diagnostic system (OBD-II) performed by the TCM (transmission control module) in combination with the ECM. The malfunction is indicated by the MIL (malfunction indicator lamp) and is stored as a DTC in the ECM memory but not the TCM memory.
The second is the TCM original self-diagnosis indicated by the O/D OFF indicator lamp. The malfunction is stored in the TCM memory. The detected items are overlapped with OBD-II self-diagnostic items. For details, refer to AT-43, "SELF-DIAGNOSTIC RESULT TEST MODE" .

OBD-II Function for A/T System

UCS000MP

The ECM provides emission-related on board diagnostic (OBD-II) functions for the A/T system. One function is to receive a signal from the TCM used with OBD-related parts of the A/T system. The signal is sent to the ECM when a malfunction occurs in the corresponding OBD-related part. The other function is to indicate a diagnostic result by means of the MIL (malfunction indicator lamp) on the instrument panel. Sensors, switches and solenoid valves are used as sensing elements.
The MIL automatically illuminates in One or Two Trip Detection Logic when a malfunction is sensed in relation to A/T system parts.

One or Two Trip Detection Logic of OBD-II

UCS000MQ

ONE TRIP DETECTION LOGIC

If a malfunction is sensed during the first test drive, the MIL will illuminate and the malfunction will be stored in the ECM memory as a DTC. The TCM is not provided with such a memory function.

TWO TRIP DETECTION LOGIC

When a malfunction is sensed during the first test drive, it is stored in the ECM memory as a 1st trip DTC (diagnostic trouble code) or 1st trip freeze frame data. At this point, the MIL will not illuminate. — First Trip
If the same malfunction as that experienced during the first test drive is sensed during the second test drive, the MIL will illuminate. — Second Trip
A/T-related parts for which the MIL illuminates during the first or second test drive are listed below.

Items	MIL	
	One trip detection	Two trip detection
Shift solenoid valve A — DTC: P0750	X	
Shift solenoid valve B — DTC: P0755	X	
Accelerator pedal position (APP) sensor — DTC: P1705	X	
Except above		X

The “trip” in the “One or Two Trip Detection Logic” means a driving mode in which self-diagnosis is performed during vehicle operation.

OBD-II Diagnostic Trouble Code (DTC)

UCS000MR

HOW TO READ DTC AND 1ST TRIP DTC

DTC and 1st trip DTC can be read by the following methods.

(With CONSULT-II or GST) CONSULT-II or GST (Generic Scan Tool) Examples: P0705, P0710, P0720, P0725, etc.
These DTCs are prescribed by SAE J2012.
(CONSULT-II also displays the malfunctioning component or system.)

- **1st trip DTC No. is the same as DTC No.**
- **Output of the diagnostic trouble code indicates that the indicated circuit has a malfunction. However, in case of the Mode II and GST they do not indicate whether the malfunction is still occurring or occurred in the past and returned to normal.**
  CONSULT-II can identify them as shown below. Therefore, using CONSULT-II (if available) is recommended.

A sample of CONSULT-II display for DTC and 1st trip DTC is shown in the following page. DTC or 1st trip DTC of a malfunction is displayed in “SELF DIAGNOSIS” mode for “ENGINE” with CONSULT-II. Time data indicates how many times the vehicle was driven after the last detection of a DTC.

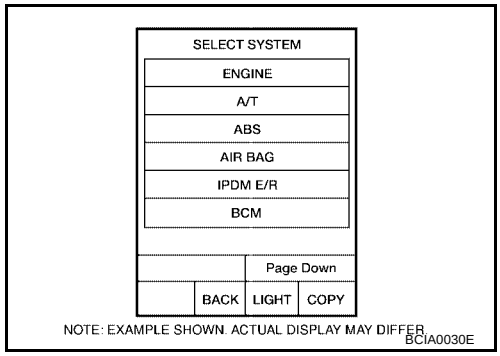

If the DTC is being detected currently, the time data will be “0”.

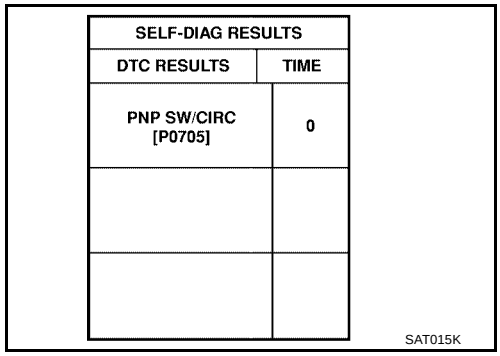

If a 1st trip DTC is stored in the ECM, the time data will be “1t”.

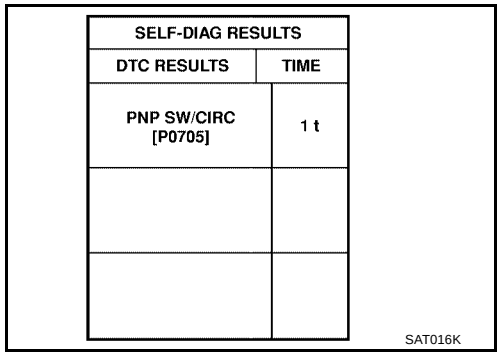

Freeze Frame Data and 1st Trip Freeze Frame Data

The ECM has a memory function, which stores the driving condition such as fuel system status, calculated load value, engine coolant temperature, short term fuel trim, long term fuel trim, engine speed and vehicle speed at the moment the ECM detects a malfunction.

Data which are stored in the ECM memory, along with the 1st trip DTC, are called 1st trip freeze frame data, and the data, stored together with the DTC data, are called freeze frame data and displayed on CONSULT-II or GST. The 1st trip freeze frame data can only be displayed on the CONSULT-II screen, not on the GST. For details, refer to EC-60, "FREEZE FRAME DATA AND 1ST TRIP FREEZE FRAME DATA" .

Only one set of freeze frame data (either 1st trip freeze frame data of freeze frame data) can be stored in the ECM. 1st trip freeze frame data is stored in the ECM memory along with the 1st trip DTC. There is no priority for 1st trip freeze frame data and it is updated each time a different 1st trip DTC is detected. However, once freeze frame data (2nd trip detection/MIL on) is stored in the ECM memory, 1st trip freeze frame data is no longer stored. Remember, only one set of freeze frame data can be stored in the ECM. The ECM has the following priorities to update the data.

Priority	Items	
1	Freeze frame data	Misfire — DTC: P0300 - P0306 Fuel Injection System Function — DTC: P0171, P0172, P0174, P0175
2		Except the above items (Includes A/T related items)
3	1st trip freeze frame data	

Both 1st trip freeze frame data and freeze frame data (along with the DTCs) are cleared when the ECM memory is erased.

HOW TO ERASE DTC

The diagnostic trouble code can be erased by CONSULT-II, GST or ECM DIAGNOSTIC TEST MODE as described following.

- **If the battery terminal is disconnected, the diagnostic trouble code will be lost within 24 hours.**
- **When you erase the DTC, using CONSULT-II or GST is easier and quicker than switching the mode selector on the ECM.**

The following emission-related diagnostic information is cleared from the ECM memory when erasing DTC related to OBD-II. For details, refer to EC-55, "Emission-related Diagnostic Information" .

- **Diagnostic trouble codes (DTC)**
- **1st trip diagnostic trouble codes (1st trip DTC)**
- **Freeze frame data**
- **1st trip freeze frame data**
- **System readiness test (SRT) codes**
- **Test values**

HOW TO ERASE DTC (WITH CONSULT-II)

- **If a DTC is displayed for both ECM and TCM, it needs to be erased for both ECM and TCM.**

1. If the ignition switch stays ON after repair work, be sure to turn ignition switch OFF once. Wait at least 10 seconds and then turn it ON (engine stopped) again.
2. Turn CONSULT-II “ON” and touch “A/T”.
3. Touch “SELF-DIAG RESULTS”.
4. Touch “ERASE”. (The DTC in the TCM will be erased.) Then touch “BACK” twice.
5. Touch “ENGINE”.
6. Touch “SELF DIAGNOSIS”.
7. Touch “ERASE”. (The DTC in the ECM will be erased.)

How to erase DTC (With CONSULT-II)

1. If the ignition switch stays "ON" after repair work, be sure to turn ignition switch "OFF" once. Wait at least 10 seconds and then turn it "ON" (engine stopped) again.

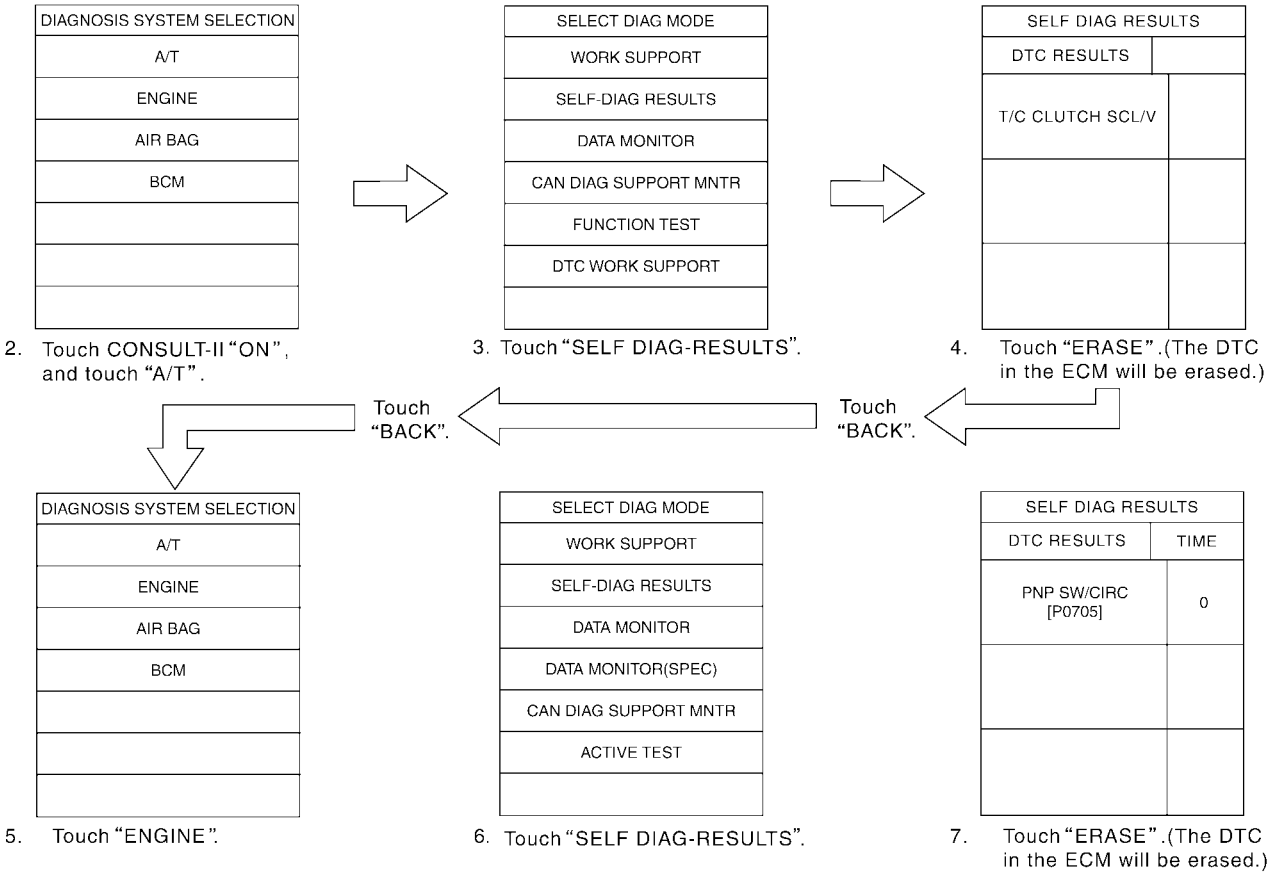

HOW TO ERASE DTC (WITH GST)

1. If the ignition switch stays ON after repair work, be sure to turn ignition switch OFF once. Wait at least 10 seconds and then turn it ON (engine stopped) again.
2. Perform "TCM SELF-DIAGNOSTIC PROCEDURE (NO TOOLS)". Refer to AT-54, "TCM SELF-DIAGNOSTIC PROCEDURE (NO TOOLS)" . (The engine warm-up step can be skipped when performing the diagnosis only to erase the DTC.)
3. Select Mode 4 with Generic Scan Tool (GST). For details, refer to EC-127, "Generic Scan Tool (GST) Function" .

HOW TO ERASE DTC (NO TOOLS)

1. If the ignition switch stays ON after repair work, be sure to turn ignition switch OFF once. Wait at least 10 seconds and then turn it ON (engine stopped) again.
2. Perform "TCM SELF-DIAGNOSTIC PROCEDURE (NO TOOLS)". Refer to AT-54, "TCM SELF-DIAGNOSTIC PROCEDURE (NO TOOLS)" . (The engine warm-up step can be skipped when performing the diagnosis only to erase the DTC.)
3. Perform "OBD-II SELF-DIAGNOSTIC PROCEDURE (NO TOOLS)". Refer to EC-69, "How to Erase DTC" .

Malfunction Indicator Lamp (MIL)

UCS000MS

1. The malfunction indicator lamp will light up when the ignition switch is turned ON without the engine running. This is for checking the lamp.
   - If the malfunction indicator lamp does not light up, refer to DI-22, "WARNING LAMPS" .
     [Or see EC-698, "MIL AND DATA LINK CONNECTOR" .]
2. When the engine is started, the malfunction indicator lamp should go off.
   If the lamp remains on, the on board diagnostic system has detected an emission-related (OBD-II) malfunction. For details, refer to EC-55, "Emission-related Diagnostic Information" .

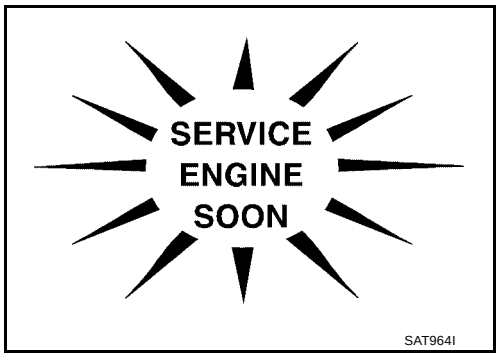

CONSULT-II Function (TCM)

UCS000MT

CONSULT-II can display each diagnostic item using the diagnostic test modes shown following.

TCM diagnostic mode	Description
WORK SUPPORT	Supports inspections and adjustments. Commands are transmitted to the TCM for setting the status suitable for required operation, input/output signals are received from the TCM and received data is displayed.
SELF-DIAG RESULTS	Displays TCM self-diagnosis results.
DATA MONITOR	Displays TCM input/output data in real time.
CAN DIAG SUPPORT MNTR	The result of transmit/receive diagnosis of CAN communication can be read.
ACTIVE TEST	Operation of electrical loads can be checked by sending drive signal to them.
FUNCTION TEST	Conducted by CONSULT-II instead of a technician to determine whether each system is "OK" or "NG".
ECU PART NUMBER	TCM part number can be read.

After performing “SELF-DIAGNOSTIC PROCEDURE (WITH CONSULT-II)” (AT-42, "SELF-DIAGNOSTIC PROCEDURE (WITH CONSULT-II)"), place check marks for results on the “Diagnostic Worksheet”, (AT-60, "DIAGNOSTIC WORKSHEET"). Reference pages are provided following the items.

NOTICE:

1. The CONSULT-II electrically displays shift timing and lock-up timing (that is, operation timing of each solenoid).
   Check for time difference between actual shift timing and the CONSULT-II display. If the difference is noticeable, mechanical parts (except solenoids, sensors, etc.) may be malfunctioning. Check mechanical parts using applicable diagnostic procedures.
2. Shift schedule (which implies gear position) displayed on CONSULT-II and that indicated in Service Manual may differ slightly. This occurs because of the following reasons:
   - Actual shift schedule has more or less tolerance or allowance,
   - Shift schedule indicated in Service Manual refers to the point where shifts start, and
   - Gear position displayed on CONSULT-II indicates the point where shifts are completed.
3. Shift solenoid valve “A” or “B” is displayed on CONSULT-II at the start of shifting. Gear position is displayed upon completion of shifting (which is computed by TCM).
4. Additional CONSULT-II information can be found in the Operation Manual supplied with the CONSULT-II unit.

SELF-DIAGNOSTIC PROCEDURE (WITH CONSULT-II)

CAUTION:

If CONSULT-II is used with no connection of CONSULT-II CONVERTER, malfunctions might be detected in self-diagnosis depending on control unit which carry out CAN communication.

- For details, refer to the separate “CONSULT-II Operations Manual”.

1. Touch on CONSULT-II, touch “START (NISSAN BASED VHCL)”, and touch “ENGINE” for OBD-II detected items or touch “A/T” for TCM self-diagnosis.
If “ENGINE” or “A/T” is not displayed, go to GI-37, "CONSULT-II Data Link Connector (DLC) Circuit" .

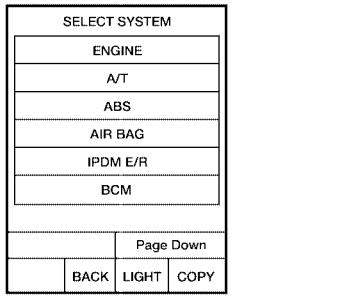

NOTE: EXAMPLE SHOWN. ACTUAL DISPLAY MAY DIFFER
BCIA0030E

2. Touch “SELF DIAG RESULTS”.
Display shows malfunction experienced since the last erasing operation.
CONSULT-II performs “Real Time Diagnosis”.
Also, any malfunction detected while in this mode will be displayed at real time.

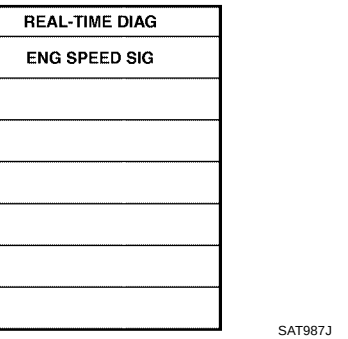

SAT987J

SELF-DIAGNOSTIC RESULT TEST MODE

Detected items (Screen terms for CONSULT-II, “SELF DIAGNOSIS” test mode)		Malfunction is detected when...	TCM self-diagnosis	OBD-II (DTC)
“A/T”	“ENGINE”		Available by O/D OFF indicator lamp	Available by malfunction indicator lamp*2, SERVICE ENGINE SOON “ENGINE” on CONSULT-II or GST
Park/neutral position (PNP) switch circuit		● TCM does not receive the correct voltage signal (based on the gear position) from the switch.	—	P0705
—	PNP SW/CIRC			
Revolution sensor		● TCM does not receive the proper voltage signal from the sensor.	X	P0720
VHCL SPEED SEN·A/T	VEH SPD SEN/ CIR AT			
Vehicle speed signal from meter		● TCM does not receive the proper voltage signal from the combination meter.	X	—
VHCL SPEED SEN·MTR	—			
A/T 1st gear function		● A/T cannot be shifted to the 1st gear position even if electrical circuit is good.	—	P0731*1
A/T 1ST GR FNCTN	A/T 1ST GR FNCTN			
A/T 2rd gear function		● A/T cannot be shifted to the 2nd gear position even if electrical circuit is good.	—	P0732*1
A/T 2ND GR FNCTN	A/T 2ND GR FNCTN			
A/T 3rd gear function		● A/T cannot be shifted to the 3rd gear position even if electrical circuit is good.	—	P0733*1
A/T 3RD GR FNCTN	A/T 3RD GR FNCTN			
A/T 4th gear function		● A/T cannot be shifted to the 4th gear position even if electrical circuit is good.	—	P0734*1
A/T 4TH GR FNCTN	A/T 4TH GR FNCTN			
A/T TCC S/V function (lock-up)		● A/T cannot perform lock-up even if electrical circuit is good.	—	P0744*1
A/T TCC S/V FNCTN	A/T TCC S/V FNCTN			

Detected items (Screen terms for CONSULT-II, "SELF DIAGNOSIS" test mode)		Malfunction is detected when...	TCM self-diagnosis	OBD-II (DTC)
"A/T"	"ENGINE"		Available by O/D OFF indicator lamp	Available by malfunction indicator lamp*2, SERVICE ENGINE SOON "ENGINE" on CONSULT-II or GST
Shift solenoid valve A		● TCM detects an improper voltage drop when it tries to operate the solenoid valve.	X	P0750
SHIFT SOLENOID/V A	SFT SOL A/CIRC			
Shift solenoid valve B		● TCM detects an improper voltage drop when it tries to operate the solenoid valve.	X	P0755
SHIFT SOLENOID/V B	SFT SOL B/CIRC			
Overrun clutch solenoid valve		● TCM detects an improper voltage drop when it tries to operate the solenoid valve.	X	P1760
OVERRUN CLUTCH S/V	O/R CLUCH SOL/CIRC			
T/C clutch solenoid valve		● TCM detects an improper voltage drop when it tries to operate the solenoid valve.	X	P0740
T/C CLUTCH SOL/V	TCC SOLENOID/CIRC			
Line pressure solenoid valve		● TCM detects an improper voltage drop when it tries to operate the solenoid valve.	X	P0745
LINE PRESSURE S/V	L/PRESS SOL/CIRC			
Accelerator pedal position (APP) sensor		● TCM receives an excessively low or high voltage from this sensor	X	P1705
THROTTLE POSI SEN	TP/SEN/CIRC A/T			
Engine speed signal		● TCM does not receive the proper voltage signal from the ECM.	X	P0725
ENGINE SPEED SIG	ENGINE SPEED SIG			
A/T fluid temperature sensor		● TCM receives an excessively low or high voltage from the sensor.	X	P0710
BATT/FLUID TEMP SEN	ATF TEMP SEN/CIRC			
CAN communication*3		● When malfunction is detected in CAN communication line.	X	U1000
CAN COMM CIRCUIT	CAN COMM CIRCUIT			
Turbine revolution sensor (power train revolution sensor		● TCM does not receive proper voltage signal from sensor	X	—
TURBINE REV	—			
TCM (RAM)		● TCM memory (RAM) is malfunctioning	—	—
CONTROL UNIT (RAM)	—			
TCM (ROM)		● TCM memory (ROM) is malfunctioning	—	—
CONTROL UNIT (ROM)	—			
TCM (EEP ROM)		● TCM memory (EEP ROM) is malfunctioning.	—	—
CONT UNIT(EEP ROM)	—			
Initial start		● This is not a malfunction message (Whenever shutting off a power supply to the TCM, this message appears on the screen.)	X	—
INITIAL START	—			
No failure (NO SELF DIAGNOSTIC FAILURE INDICATED FURTHER TESTING MAY BE REQUIRED**)		● No failure has been detected.	X	X

X: Applicable
–: Not applicable

*1: These malfunctions cannot be displayed by MIL if another malfunction is assigned to MIL.
*2: Refer to EC-71, "Malfunction Indicator Lamp (MIL)" .
*3: If malfunction is detected in multiple systems including CAN communication line, CAN communication line trouble diagnosis shall be performed first.

DATA MONITOR MODE (A/T)

Item	Display	Selection monitor item			Description	Remarks
		TCM INPUT SIGNALS	MAIN SIGNALS	SELECTION FROM MENU		
Vehicle speed sensor 1 (A/T) (Revolution sensor)	VHCL/S SE-A/T [km/h] or [mph]	X	—	▼	● Vehicle speed computed from signal of revolution sensor is displayed.	● When racing engine in N or P with vehicle stationary, CONSULT-II data may not indicate 0 km/h (0 mph).
Vehicle speed sensor 2 (Meter)	VHCL/S SE-MTR [km/h] or [mph]	X	—	▼	● Vehicle speed computed from signal of vehicle speed sensor is displayed.	● Vehicle speed display may not be accurate under approx. 10 km/h (6 mph). It may not indicate 0 km/h (0 mph) when vehicle is stationary.
Accelerator pedal position (APP) sensor	THRTL POS SEN [V]	X	—	▼	● Accelerator pedal position (APP) sensor signal voltage is displayed	
A/T fluid temperature sensor	FLUID TEMP SE [V]	X	—	▼	● A/T fluid temperature sensor signal voltage is displayed. ● Signal voltage lowers as fluid temperature rises.	
Battery voltage	BATTERY VOLT [V]	X	—	▼	● Source voltage of TCM is displayed.	
Engine speed	ENGINE SPEED [rpm]	X	X	▼	● Engine speed, computed from engine speed signal, is displayed.	● Engine speed display may not be accurate under approx. 800 rpm. It may not indicate 0 rpm even when engine is not running.
Turbine revolution sensor (power train revolution sensor)	TURBINE REV [rpm]	X	—	▼	● Checks changing speed then performs oil pressure control and torque down control	● Error may occur under approx. 800 rpm and will not indicate 0 rpm even if engine is not running.
Overdrive control switch	OVERDRIVE SW [ON/OFF]	X	—	▼	● ON/OFF state computed from signal of overdrive control switch, is displayed.	
PN position (PNP) switch	PN POSI SW [ON/OFF]	X	—	▼	● ON/OFF state computed from signal of PN position switch, is displayed.	
R position switch	R POSITION SW [ON/OFF]	X	—	▼	● ON/OFF state computed from signal of R position switch, is displayed.	

Item	Display	Selection monitor item			Description	Remarks
		TCM INPUT SIG-NALS	MAIN SIG-NALS	SELEC-TION FROM MENU		
D position switch	D POSITION SW [ON/OFF]	X	—	▼	● ON/OFF state computed from signal of D position switch, is displayed.	
L position switch	2 POSITION SW [ON/OFF]	X	—	▼	● ON/OFF status, computed from signal of L (2nd) position switch, is displayed.	
1 position switch	1 POSITION SW [ON/OFF]	X	—	▼	● ON/OFF status, computed from signal of 1st position switch, is displayed.	● This is displayed even when no 1st position switch is equipped.
ASCD cruise signal	ASCD-CRUISE [ON/OFF]	X	—	▼	● Status of ASCD cruise signal is displayed. ON ... Cruising state OFF ... Normal running state	
ASCD OD cut signal	ASCD-OD CUT [ON/OFF]	X	—	▼	● Status of ASCD OD release signal is displayed. ON ... OD released OFF ... OD not released	
Kickdown switch	KICKDOWN SW [ON/OFF]	X	—	▼	● ON/OFF status, computed from signal of kickdown switch, is displayed.	● This is displayed even when no kickdown switch is equipped.
A/T mode switch	POWER SHIFT SW [ON/OFF]	X	—	▼		● Not mounted but displayed
Closed throttle position signal	CLOSED THL/SW [ON/OFF]	X	—	▼	● ON/OFF status, computed from signal of closed throttle position signal, is displayed.	● This means closed throttle position signal input via CAN communication line.
Wide open throttle position signal	W/O THRL/P-SW [ON/OFF]	X	—	▼	● ON/OFF status, computed from signal of wide open throttle position signal, is displayed.	● This means wide open throttle position signal input via CAN communication line.
Shift solenoid valve A	*SHIFT S/V A [ON/OFF]	—	—	▼	● Displays status of check signal (reinput signal) for TCM control signal output. Remains unchanged when solenoid valves are open or shorted.	
Shift solenoid valve B	*SHIFT S/V B [ON/OFF]	—	—	▼		
Overrun clutch solenoid valve	*OVRRUN/C S/V [ON/OFF]	—	—	▼		
A/T mode switch	HOLD SW [ON/OFF]	X	—	▼		● Not mounted but displayed
Stop lamp switch	BRAKE SW [ON/OFF]	X	—	▼	● ON/OFF status is displayed. ON ... Brake pedal is depressed. OFF ... Brake pedal is released.	

Item	Display	Selection monitor item			Description	Remarks
		TCM INPUT SIGNALS	MAIN SIGNALS	SELECTION FROM MENU		
Gear position	GEAR	—	X	▼	● Gear position data, used for computation by TCM, is displayed.	
Selector lever position	SLCT LVR POSI	—	X	▼	● Selector lever position data, used for computation by TCM, is displayed.	● A specific value used for control is displayed if fail-safe is activated due to error.
Vehicle speed	VEHICLE SPEED [km/h] or [mph]	—	X	▼	● Vehicle speed data, used for computation by TCM, is displayed.	
Throttle position	THROTTLE POSI [/8]	—	X	▼	● Throttle position data, used for computation by TCM, is displayed.	● A specific value used for control is displayed if fail-safe is activated due to error.
Line pressure duty	LINE PRES DTY [%]	—	X	▼	● Control value of line pressure solenoid valve, computed by TCM from each input signal, is displayed.	
Torque converter clutch solenoid valve duty	TCC S/V DUTY [%]	—	X	▼	● Control value of torque converter clutch solenoid valve, computed by TCM from each input signal, is displayed.	
Shift solenoid valve A	SHIFT S/V A [ON/OFF]	—	X	▼	● Control value of shift solenoid valve A, computed by TCM from each input signal, is displayed.	● Control value of solenoid is displayed even if solenoid circuit is disconnected. The OFF signal is displayed if solenoid circuit is shorted.
Shift solenoid valve B	SHIFT S/V B [ON/OFF]	—	X	▼	● Control value of shift solenoid valve B, computed by TCM from each input signal, is displayed.	
Overrun clutch solenoid valve	OVERRUN/C S/V [ON/OFF]	—	X	▼	● Control value of overrun clutch solenoid valve computed by TCM from each input signal is displayed.	
Self-diagnosis display lamp (O/D OFF indicator lamp)	SELF-D DP LMP [ON/OFF]	—	X	▼	● Control status of O/D OFF indicator lamp is displayed.	
Torque converter slip ratio	TC SLIP RATIO [0.000]	—	—	▼	● Ratio of engine revolution to input shaft revolution of torque converter.	
Torque converter slip speed	TC SLIP SPEED [rpm]	—	—	▼	● Difference in revolution between input shaft revolution and torque converter input shaft revolution.	● Display does not indicate engine is stopped even if 0 rpm — this is not a malfunction.
Voltage	Voltage [V]	—	—	▼	● Value measured by voltage probe is displayed.	

Item	Display	Selection monitor item			Description	Remarks
		TCM INPUT SIG-NALS	MAIN SIG-NALS	SELEC-TION FROM MENU		
Frequency	Frequency [Hz]	—	—	▼	● Value measured by pulse probe is displayed. If measurement is impossible, "#" sign is displayed. "#" sign is also displayed at the final data value until the measurement result is obtained.	
Duty cycle (high)	DUTY-HI [%]	—	—	▼	● Duty cycle value for measurement probe is displayed.	
Duty cycle (low)	DUTY-LOW [%]	—	—	▼		
Plus width (high)	PLS WIDTH-HI [msec]	—	—	▼	● Measured pulse width of measurement probe is displayed.	
Plus width (low)	PLS WIDTH-LOW [msec]	—	—	▼		

X: Applicable
—: Not applicable
▼: Option

DTC WORK SUPPORT MODE WITH CONSULT-II

CONSULT-II Setting Procedure

CAUTION:

If CONSULT-II is used with no connection of CONSULT-II CONVERTER, malfunctions might be detected in self-diagnosis depending on control unit which carry out CAN communication.

- For details, refer to the separate “CONSULT-II Operations Manual”.

1. Turn ignition switch OFF.
2. Connect CONSULT-II and CONSULT-II CONVERTER to data link connector, which is located in instrument lower panel on driver side.

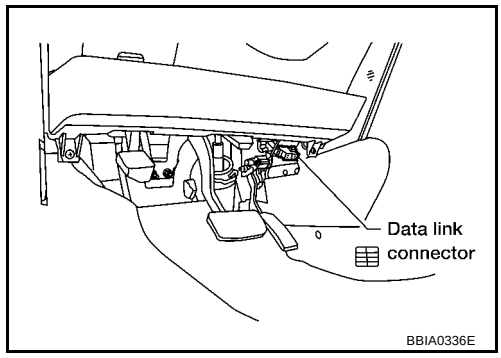

3. Turn ignition switch to ON position. (Do not start engine.)
4. Touch “START (NISSAN BASED VHCL)”.

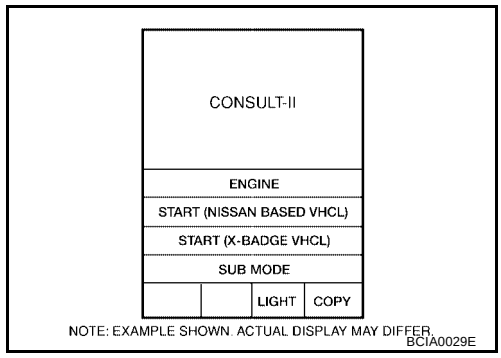

5. Touch “A/T”.
If “A/T” is not indicated, go to GI-37, "CONSULT-II Data Link Connector (DLC) Circuit" .

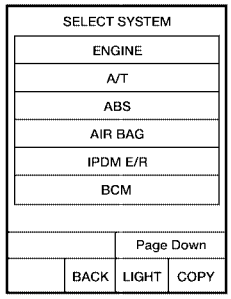

NOTE: EXAMPLE SHOWN. ACTUAL DISPLAY MAY DIFFER
BCIA0030E

6. Touch “DTC WORK SUPPORT”.

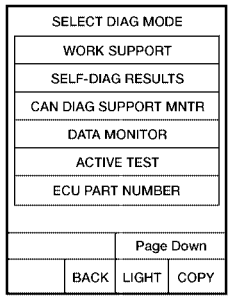

NOTE: EXAMPLE SHOWN. ACTUAL DISPLAY MAY DIFFER
BCIA0031E

7. Touch select item menu (1ST, 2ND, etc.).

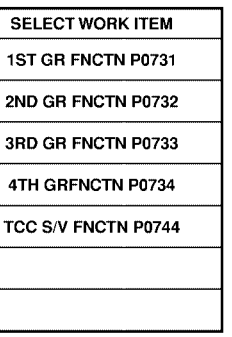

SAT018K

8. Touch “START”.

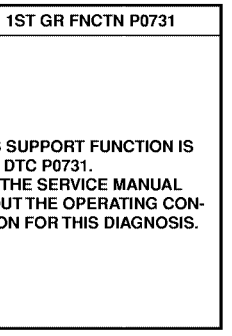

SAT589J

9. Perform driving test according to “DTC CONFIRMATION PROCEDURE” in “TROUBLE DIAGNOSIS FOR DTC”.

1ST GR FNCTN P0731	
OUT OF CONDTION	
MONITOR	
GEAR	XXX
VEHICLE SPEED	XXXkm/h
THROTTLE POSI	XXX
TCC S/V DUTY	XXX %

SAT019K

- **When testing conditions are satisfied, CONSULT-II screen changes from “OUT OF CONDITION” to “TESTING”.**

1ST GR FNCTN P0731	
TESTING	
MONITOR	
GEAR	XXX
VEHICLE SPEED	XXXkm/h
THROTTLE POSI	XXX
TCC S/V DUTY	XXX %

SAT591J

10. Stop vehicle. If “NG” appears on the screen, malfunction may exist. Go to “DIAGNOSTIC PROCEDURE”.

1ST GR FNCTN P0731
STOP VEHICLE

SAT592J

1ST GR FNCTN P0731
NG

SAT593J

11. Perform test drive to check gear shift feeling in accordance with instructions displayed.

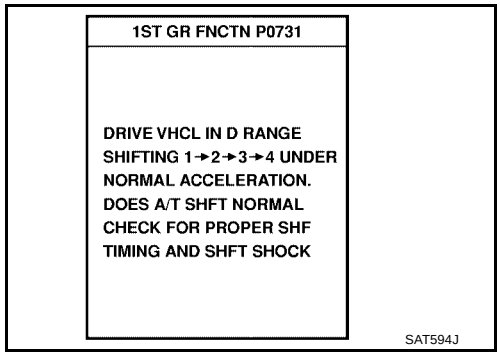

12. Touch “YES” or “NO”.

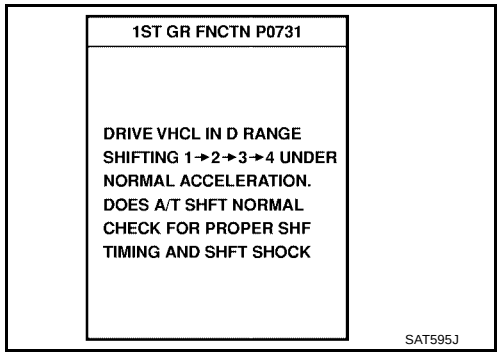

13. CONSULT-II procedure ended.
If “NG” appears on the scene, a malfunction may exist. Go to “DIAGNOSTIC PROCEDURE”.

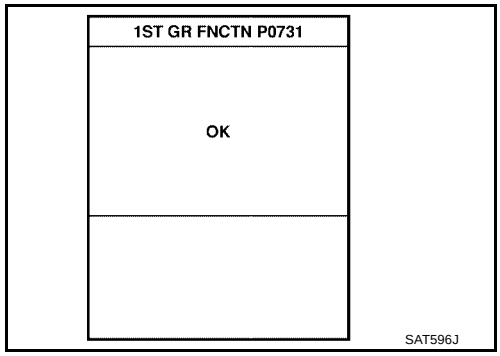

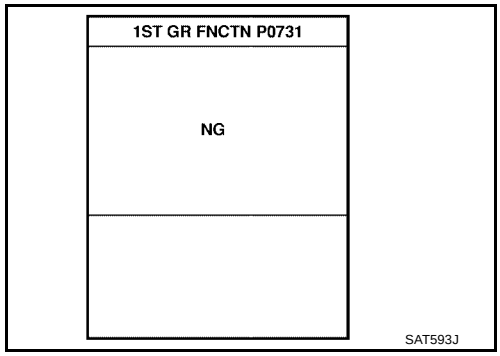

DTC WORK SUPPORT MODE

DTC work support item	Description	Check item
1ST GR FNCTN P0731	Following items for “A/T 1st gear function (P0731)” can be confirmed. ● Self-diagnosis status (whether the diagnosis is being conducted or not) ● Self-diagnosis result (OK or NG)	● Shift solenoid valve A ● Shift solenoid valve B ● Each clutch ● Hydraulic control circuit
2ND GR FNCTN P0732	Following items for “A/T 2nd gear function (P0732)” can be confirmed. ● Self-diagnosis status (whether the diagnosis is being conducted or not) ● Self-diagnosis result (OK or NG)	● Shift solenoid valve B ● Each clutch ● Hydraulic control circuit
3RD GR FNCTN P0733	Following items for “A/T 3rd gear function (P0733)” can be confirmed. ● Self-diagnosis status (whether the diagnosis is being conducted or not) ● Self-diagnosis result (OK or NG)	● Shift solenoid valve A ● Each clutch ● Hydraulic control circuit
4TH GR FNCTN P0734	Following items for “A/T 4th gear function (P0734)” can be confirmed. ● Self-diagnosis status (whether the diagnosis is being conducted or not) ● Self-diagnosis result (OK or NG)	● Shift solenoid valve A ● Shift solenoid valve B ● Overrun clutch solenoid valve ● Line pressure solenoid valve ● Each clutch ● Hydraulic control circuit
TCC S/V FNCTN P0744	Following items for “A/T TCC S/V function (lock-up) (P0744)” can be confirmed. ● Self-diagnosis status (whether the diagnosis is being conducted or not) ● Self-diagnosis result (OK or NG)	● Torque converter clutch solenoid valve ● Each clutch ● Hydraulic control circuit

CAN DIAGNOSTIC SUPPORT MONITOR

CONSULT-II Setting Procedure

CAUTION:

If CONSULT-II is used with no connection of CONSULT-II CONVERTER, malfunctions might be detected in self-diagnosis depending on control unit which carries out CAN communication.

- For details, refer to the separate “CONSULT-II Operations Manual”.

1. Turn ignition switch OFF.
2. Connect CONSULT-II and CONSULT-II CONVERTER to data link connector, which is located in instrument lower panel on driver side.

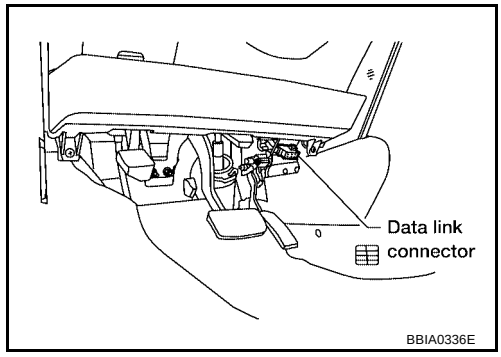

3. Turn ignition switch to ON position. (Do not start engine.)
4. Touch “START (NISSAN BASED VHCL)”.

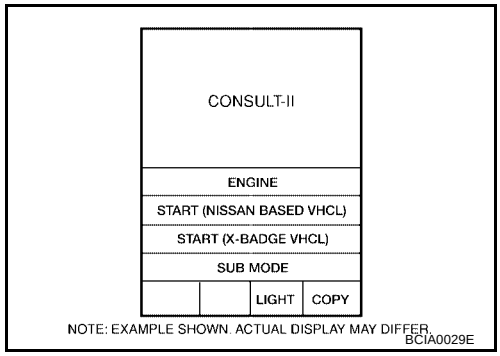

5. Touch “A/T”.
   If “A/T” is not indicated, go to GI-37, "CONSULT-II Data Link Connector (DLC) Circuit" .

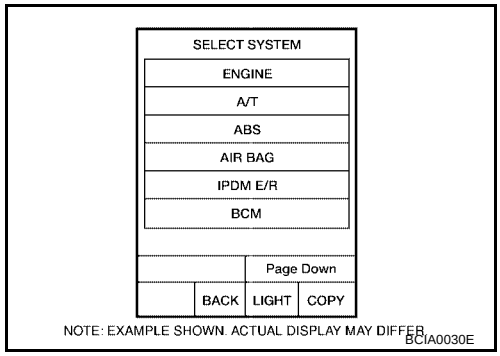

6. Touch “CAN DIAGNOSTIC SUPPORT MONITOR”.

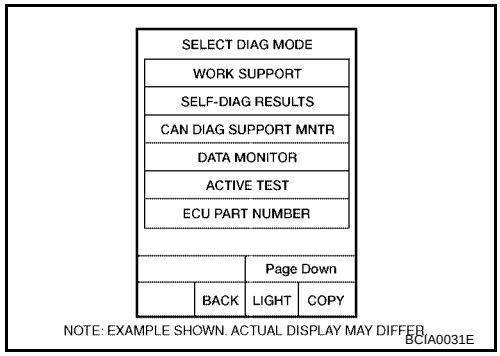

Diagnostic Procedure Without CONSULT-II

UCS000MU

OBD-II SELF-DIAGNOSTIC PROCEDURE (WITH GST)

Refer to EC-127, "Generic Scan Tool (GST) Function" .

OBD-II SELF-DIAGNOSTIC PROCEDURE (NO TOOLS)

Refer to EC-71, "Malfunction Indicator Lamp (MIL)" .

TCM SELF-DIAGNOSTIC PROCEDURE (NO TOOLS)

1. CHECK O/D OFF INDICATOR LAMP

1. Move selector lever to P position.
   Start engine and warm it up to normal engine operating temperature.
2. Turn ignition switch to OFF position.
3. Wait 5 seconds.
4. Turn ignition switch to ON position. (Do not start engine.)

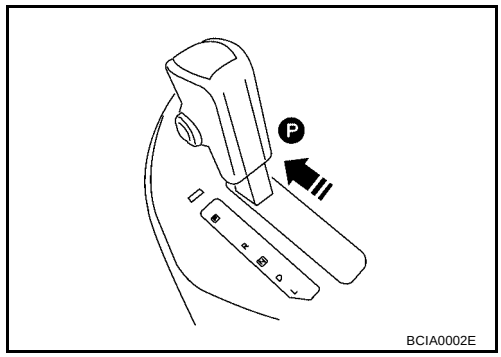

5. Does O/D OFF indicator lamp come on for about 2 seconds?

Yes or No

Yes >> GO TO 2.
No >> Stop procedure. Perform AT-212, "O/D OFF Indicator Lamp Does Not Come On" before proceeding.

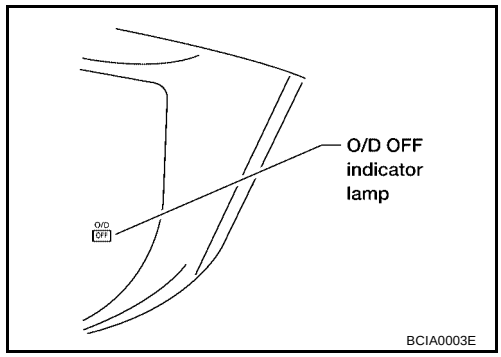

2. JUDGEMENT PROCEDURE STEP 1

1. Turn ignition switch to OFF position.
2. Push and hold shift lock release button.
3. Move selector lever to D position.
4. Push and hold overdrive control switch to ON position.
5. Turn ignition switch to ON position. (Do not start engine.)
   Wait more than 2seconds after turning ignition switch to ON.

>> GO TO 3.

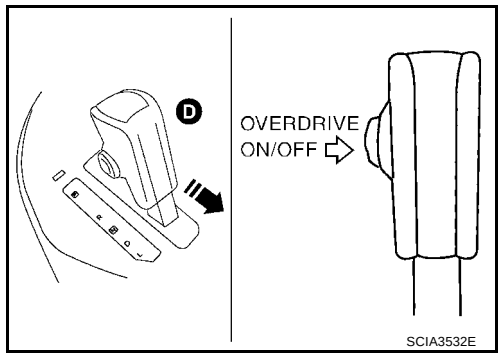

3. JUDGEMENT PROCEDURE STEP 2

1. Move selector lever to L position.
2. Release overdrive control switch to OFF position.
   (O/D OFF indicator lamp: ON)

>> GO TO 4.

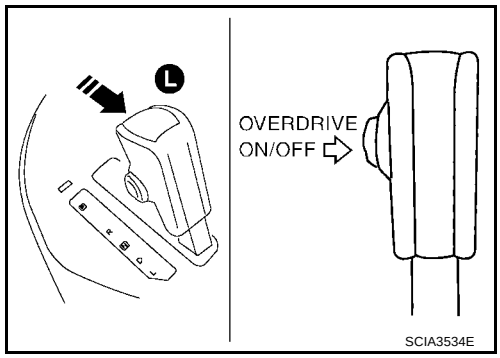

4. JUDGEMENT PROCEDURE STEP 3

1. Move selector lever to D position.
2. Push and hold overdrive control switch to ON position.
   (O/D OFF indicator lamp: OFF)

>> GO TO 5.

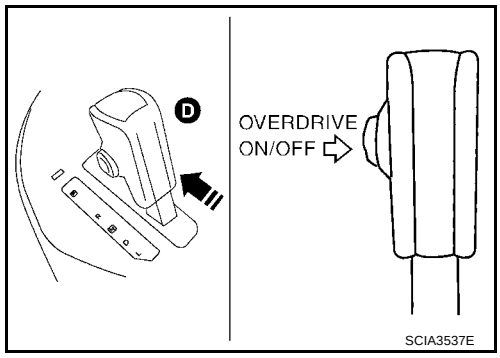

5. JUDGEMENT PROCEDURE STEP 4

1. Depress accelerator pedal fully and release it.

>> GO TO 6.

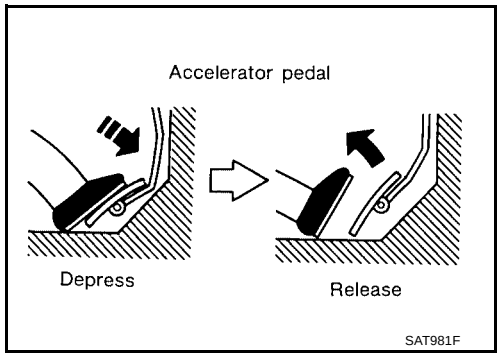

6. CHECK SELF-DIAGNOSTIC CODE

Check O/D OFF indicator lamp.
Refer to AT-56, "JUDGEMENT OF SELF-DIAGNOSIS CODE" .

>> **DIAGNOSIS END**

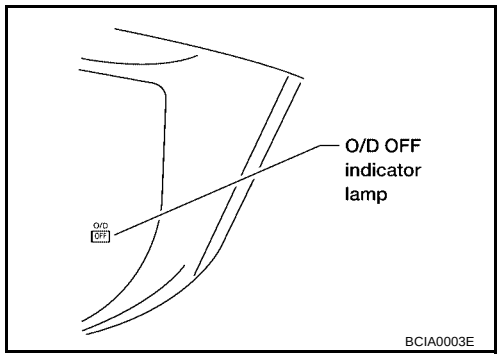

JUDGEMENT OF SELF-DIAGNOSIS CODE

O/D OFF indicator lamp:	
All judgement flickers are the same. 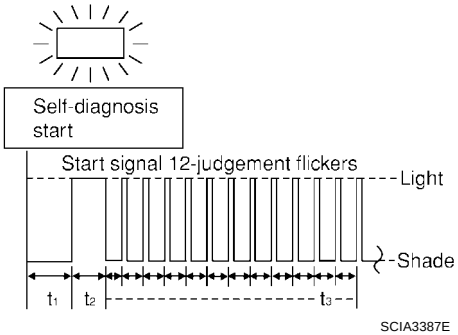 All circuits that can be confirmed by self-diagnosis are OK.	1st judgement flicker is longer than others. 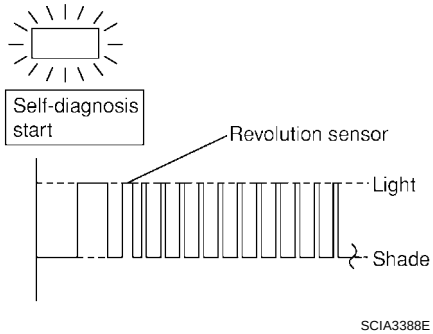 Revolution sensor circuit is short-circuited or disconnected. ⇒ **Go to** AT-118, "DTC P0720 VEHICLE SPEED SENSOR·A/T (REVOLUTION SENSOR)" **.**
2nd judgement flicker is longer than others. 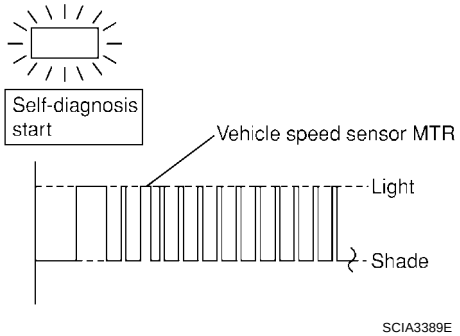 Vehicle speed signal circuit is short-circuited or disconnected. ⇒ **Go to** AT-195, "DTC VEHICLE SPEED SENSOR MTR" **.**	3rd judgement flicker is longer than others. 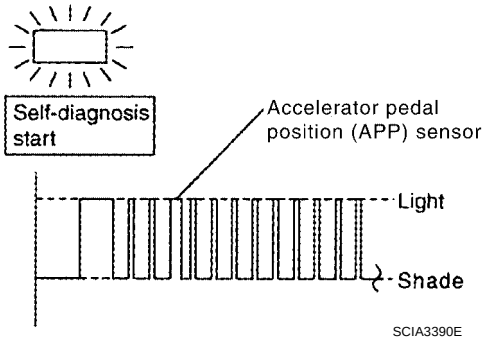 Accelerator pedal position (APP) sensor circuit is short-circuited or disconnected. ⇒ **Go to** AT-178, "DTC P1705 THROTTLE POSITION SENSOR [ACCELERATOR PEDAL POSITION (APP) SENSOR]" **.**
4th judgement flicker is longer than others. 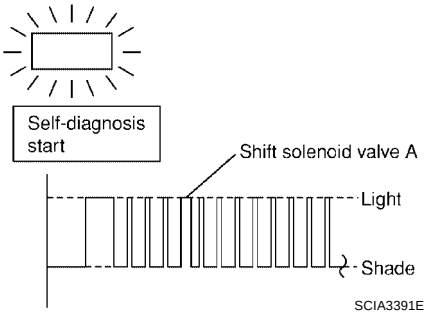 Shift solenoid valve A circuit is short-circuited or disconnected. ⇒ **Go to** AT-168, "DTC P0750 SHIFT SOLENOID VALVE A" **.**	5th judgement flicker is longer than others. 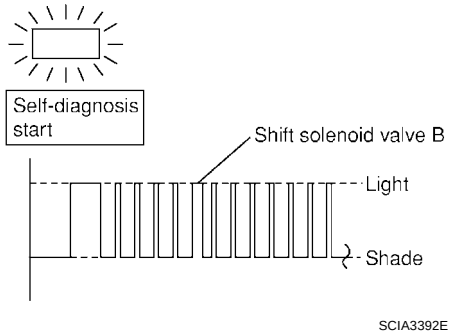 Shift solenoid valve B circuit is short-circuited or disconnected. ⇒ **Go to** AT-173, "DTC P0755 SHIFT SOLENOID VALVE B" **.**

O/D OFF indicator lamp:	
6th judgement flicker is longer than others. 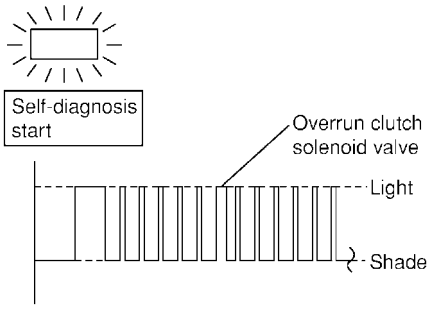 SCIA3393E Overrun clutch solenoid valve circuit is short-circuited or disconnected. ⇒ **Go to** AT-184, "DTC P1760 OVERRUN CLUTCH SOLENOID VALVE" .	7th judgement flicker is longer than others. 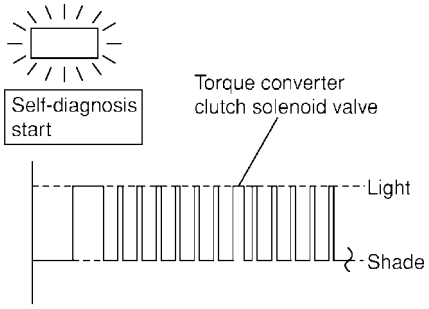 SCIA3394E Torque converter clutch solenoid valve circuit is short-circuited or disconnected. ⇒ **Go to** AT-149, "DTC P0740 TORQUE CONVERTER CLUTCH SOLENOID VALVE" .
8th judgement flicker is longer than others. 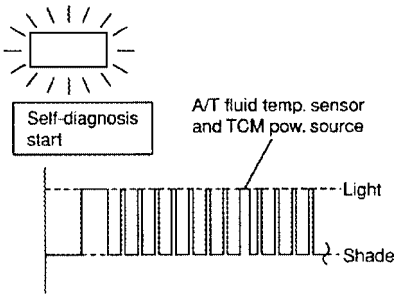 SCIA3395E A/T fluid temperature sensor is disconnected or TCM power source circuit is damaged. ⇒ **Go to** AT-189, "DTC BATT/FLUID TEMP SEN (A/T FLUID TEMP SENSOR CIRCUIT AND TCM POWER SOURCE)" .	9th judgement flicker is longer than others. 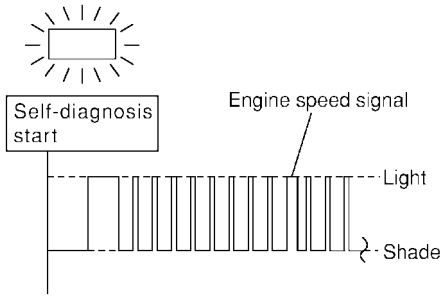 SCIA3396E Engine speed signal circuit is short-circuited or disconnected. ⇒ **Go to** AT-123, "DTC P0725 ENGINE SPEED SIGNAL" .
10th judgement flicker is longer than others. 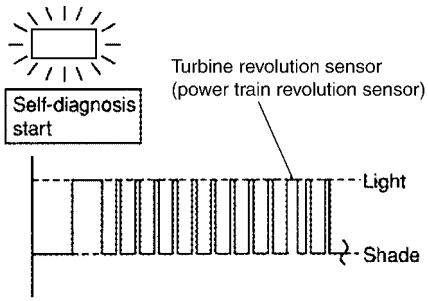 SCIA3397E Turbine revolution sensor (power train revolution sensor) circuit is short-circuited or disconnected. ⇒ **Go to** AT-200, "DTC TURBINE REVOLUTION SENSOR" .	11th judgement flicker is longer than others. 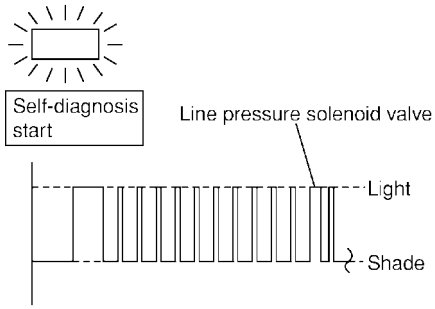 SCIA3398E Line pressure solenoid valve circuit is short-circuited or disconnected. ⇒ **Go to** AT-162, "DTC P0745 LINE PRESSURE SOLENOID VALVE" .

O/D OFF indicator lamp:	
12th judgement flicker is longer than others. 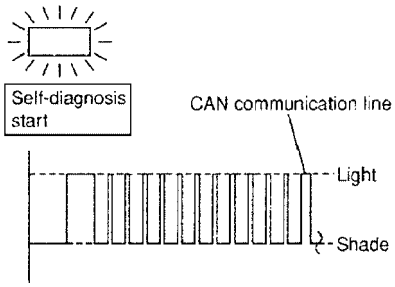 SCIA3399E CAN communication line is damaged. ⇒ **Go to AT-103, "DTC U1000 CAN COMMUNICATION LINE" .**	Lamp does not blink. 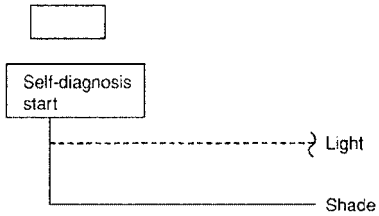 SCIA3400E Park/neutral position (PNP) switch, overdrive control switch, closed throttle position signal or wide-open throttle position signal circuit is disconnected or TCM is damaged. ⇒ **Go to AT-239, "TCM Self-diagnosis Does Not Activate" .**
Flickers as shown below. 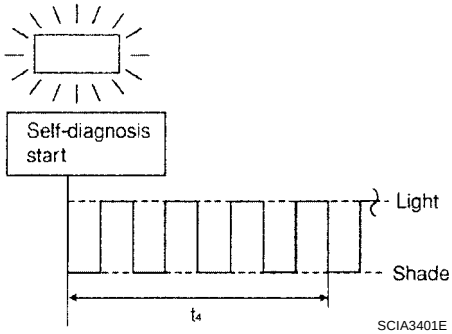 SCIA3401E Battery power is low. Battery has been disconnected for a long time. Battery is connected conversely. (When reconnecting TCM connectors.—This is not a problem.)	

t_1 = 2.5 seconds t_2 = 2.0 seconds t_3 = 1.0 second t_4 = 1.0 second

TROUBLE DIAGNOSIS - INTRODUCTION

PFP:00000

Introduction

UCS000MV

The TCM receives a signal from the vehicle speed sensor, ECM (throttle opening) or park/neutral position (PNP) switch and provides shift control or lock-up control via A/T solenoid valves.
The TCM also communicates with the ECM by means of a signal sent from sensing elements used with the OBD-related parts of the A/T system for malfunction-diagnostic purposes. The TCM is capable of diagnosing malfunctioning parts while the ECM can store malfunctions in its memory.
Input and output signals must always be correct and stable in the operation of the A/T system. The A/T system must be in good operating condition and be free of valve seizure, solenoid valve malfunction, etc.
It is much more difficult to diagnose a problem that occurs intermittently rather than continuously. Most intermittent problems are caused by poor electric connections or improper wiring. In this case, careful checking of suspected circuits may help prevent the replacement of good parts.
A visual check only, may not find the cause of the problems. A road test with CONSULT-II (or GST) or a circuit tester connected should be performed. Follow the “Work Flow”. Refer to AT-63, "Work Flow" .

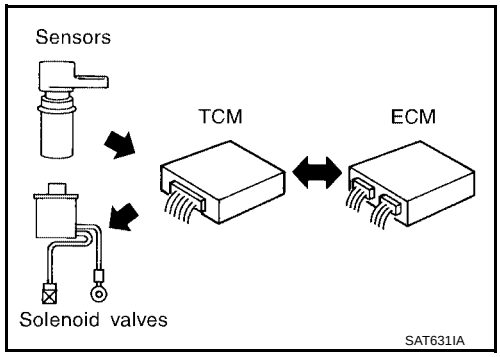

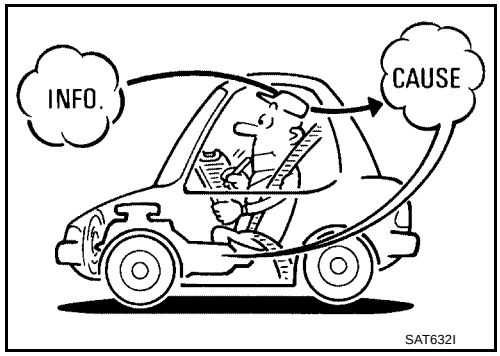

Before undertaking actual checks, take a few minutes to talk with a customer who approaches with a drive ability complaint. The customer can supply good information about such problems, especially intermittent ones. Find out what symptoms are present and under what conditions they occur. A “DIAGNOSTIC WORKSHEET” like the example on page AT-61 should be used.
Start your diagnosis by looking for “conventional” problems first. This will help troubleshoot driveability problems on an electronically controlled engine vehicle.
Also check related Service bulletins for information.

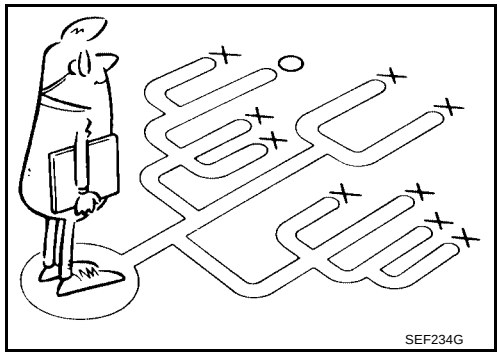

DIAGNOSTIC WORKSHEET

Information from Customer

KEY POINTS
WHAT ..... Vehicle & A/T model
WHEN ..... Date, Frequencies
WHERE ..... Road conditions
HOW ..... Operating conditions, Symptoms

Customer name MR/MS	Model & Year	VIN
Trans. model	Engine	Mileage
Incident Date	Manuf. Date	In Service Date
Frequency	❏ Continuous ❏ Intermittent (times a day)	
Symptoms	❏ Vehicle does not move. (❏ Any position ❏ Particular position)	
	❏ No up-shift (❏ 1st → 2nd ❏ 2nd → 3rd ❏ 3rd → 4th)	
	❏ No down-shift (❏ 4th → 3rd ❏ 3rd → 2nd ❏ 2nd → 1st)	
	❏ Lockup malfunction	
	❏ Shift point too high or too low.	
	❏ Shift shock or slip (❏ N → D ❏ Lockup ❏ Any drive position)	
	❏ Noise or vibration	
	❏ No kickdown	
	❏ No pattern select	
	❏ Others ( )	
O/D OFF indicator lamp	Blinks for about 8 seconds.	
	❏ Continuously lit	❏ Not lit
Malfunction indicator lamp (MIL)	❏ Continuously lit	❏ Not lit

Diagnostic Worksheet

1.	❏ Read the Fail-safe and listen to customer complaints.			AT-12
2.	❏ CHECK A/T FLUID			AT-65
		❏ Leakage (Follow specified procedure) ❏ Fluid condition ❏ Fluid level		
3.	❏ Perform STALL TEST and PRESSURE TEST.			AT-68, AT-71
		❏ Stall test — Mark possible damaged components/others.		
			❏ Torque converter one-way clutch ❏ Reverse clutch ❏ Forward clutch ❏ Overrun clutch ❏ Forward one-way clutch	❏ Low & reverse brake ❏ Low one-way clutch ❏ Engine ❏ Line pressure is low ❏ Clutches and brakes except high clutch and brake band are OK
		❏ Line pressure test — Suspected parts:		
4.	❏ Perform all ROAD TEST and mark required procedures.			AT-72
	4-1.	Check before engine is started.		AT-74
		❏ O/D OFF Indicator Lamp Does Not Come On, AT-212 ❏ SELF-DIAGNOSTIC PROCEDURE - Mark detected items.		
			❏ Park/neutral position (PNP) switch, AT-106 . ❏ A/T fluid temperature sensor, AT-112 . ❏ Vehicle speed sensor·A/T (Revolution sensor), AT-118 . ❏ Engine speed signal, AT-123 . ❏ Turbine revolution sensor (power train revolution sensor), AT-200 . ❏ Torque converter clutch solenoid valve, AT-149 . ❏ Line pressure solenoid valve, AT-162 . ❏ Shift solenoid valve A, AT-168 . ❏ Shift solenoid valve B, AT-173 . ❏ Accelerator pedal position (APP) sensor, AT-178 . ❏ Overrun clutch solenoid valve, AT-184 . ❏ A/T fluid temperature sensor, AT-112 . ❏ Vehicle speed sensor·MTR, AT-195 . ❏ CAN communication line, AT-103 . ❏ Control unit (RAM), Control unit (ROM), AT-205 . ❏ Control unit (EEP ROM), AT-207 . ❏ Park/neutral position (PNP) & overdrive control switches, closed throttle position signal and wide-open throttle position signals check AT-239 . ❏ Battery ❏ Others	

4.	4-2.	Check at idle	AT-74
		❏ Engine Cannot Be Started In P and N Position, AT-214 . ❏ In P Position, Vehicle Moves Forward or Backward When Pushed, AT-215 . ❏ In N Position, Vehicle Moves, AT-215 . ❏ Large Shock. N → R Position, AT-217 . ❏ Vehicle Does Not Creep Backward In R Position, AT-218 . ❏ Vehicle Does Not Creep Forward In D or L Position, AT-220 .	
	4-3.	Cruise test	AT-76 AT-81
		Part-1	
		❏ Vehicle Cannot Be Started From D_1 , AT-222 . ❏ A/T Does Not Shift: D_1 → D_2 or Does Not Kickdown: D_4 → D_2 , AT-224 . ❏ A/T Does Not Shift: D_2 → D_3 , AT-226 . ❏ A/T Does Not Shift: D_3 → D_4 , AT-228 . ❏ A/T Does Not Perform Lock-up, AT-230 . ❏ A/T Does Not Hold Lock-up Condition, AT-232 . ❏ Lock-up Is Not Released, AT-233 . ❏ Engine Speed Does Not Return To Idle (Light Braking D_4 → D_3), AT-234 .	
		Part-2	AT-84
		❏ Vehicle Does Not Start From D_1 , AT-236 . ❏ A/T Does Not Shift: D_1 → D_2 or Does Not Kickdown: D_4 → D_2 , AT-224 . ❏ A/T Does Not Shift: D_2 → D_3 , AT-226 . ❏ A/T Does Not Shift: D_3 → D_4 , AT-228 .	
		Part-3	AT-85
		❏ A/T Does Not Shift: D_4 → D_3 , When Overdrive Control Switch ON → OFF, AT-236 . ❏ Engine Speed Does Not Return To Idle (Engine Brake In D_3), AT-234 . ❏ A/T Does Not Shift: D_3 → L_2 , When Selector Lever D → L Position, AT-237 . ❏ Vehicle Does Not Decelerate By Engine Brake, AT-237 . ❏ SELF-DIAGNOSTIC PROCEDURE — Mark detected items.	
		❏ Park/neutral position (PNP) switch, AT-106 . ❏ A/T fluid temperature sensor, AT-112 . ❏ Vehicle speed sensor·A/T (Revolution sensor), AT-118 . ❏ Engine speed signal, AT-123 . ❏ Turbine revolution sensor (power train revolution sensor), AT-200 . ❏ Torque converter clutch solenoid valve, AT-149 . ❏ Line pressure solenoid valve, AT-162 . ❏ Shift solenoid valve A, AT-168 . ❏ Shift solenoid valve B, AT-173 . ❏ Accelerator pedal position (APP) sensor, AT-178 . ❏ Overrun clutch solenoid valve, AT-184 . ❏ A/T fluid temperature sensor, AT-112 . ❏ Vehicle speed sensor·MTR, AT-195 . ❏ CAN communication line, AT-103 . ❏ Control unit (RAM), Control unit (ROM), AT-205 . ❏ Control unit (EEP ROM), AT-207 . ❏ Park/neutral position (PNP) & overdrive control switches, closed throttle position signal and wide-open throttle position signals check AT-239 . ❏ Battery ❏ Others	
5.	❏ For self-diagnosis NG items, inspect each component. Repair or replace the damaged parts.		AT-253
6.	❏ Perform all ROAD TEST and re-mark required procedures.		AT-72
7.	❏ Perform DTC CONFIRMATION PROCEDURE for following MIL indicating items and check out NG items. Refer toEC-55, "Emission-related Diagnostic Information" .		EC-55
		❏ DTC (P0731) A/T 1st gear function, AT-127 . ❏ DTC (P0732) A/T 2nd gear function, AT-132 . ❏ DTC (P0733) A/T 3rd gear function, AT-137 . ❏ DTC (P0734) A/T 4th gear function, AT-142 . ❏ DTC (P0744) A/T TCC S/V function (lock-up), AT-154 .	

8.	❏ Perform the Diagnostic Procedures for all remaining items marked NG. Repair or replace the damaged parts. Refer to the Symptom Chart when you perform the procedures. (The chart also shows some other possible symptoms and the component inspection orders.)	AT-42 AT-54
9.	❏ Erase DTC from TCM and ECM memories.	AT-40

Work Flow

UCS000MW

HOW TO PERFORM TROUBLE DIAGNOSES FOR QUICK AND ACCURATE REPAIR

A good understanding of the malfunction conditions can make troubleshooting faster and more accurate.
In general, each customer feels differently about a problem. It is important to fully understand the symptoms or conditions for a customer complaint.
Make good use of the two sheets provided, AT-60, "Information from Customer" and AT-61, "Diagnostic Work-sheet" , to perform the best troubleshooting possible.

WORK FLOW CHART

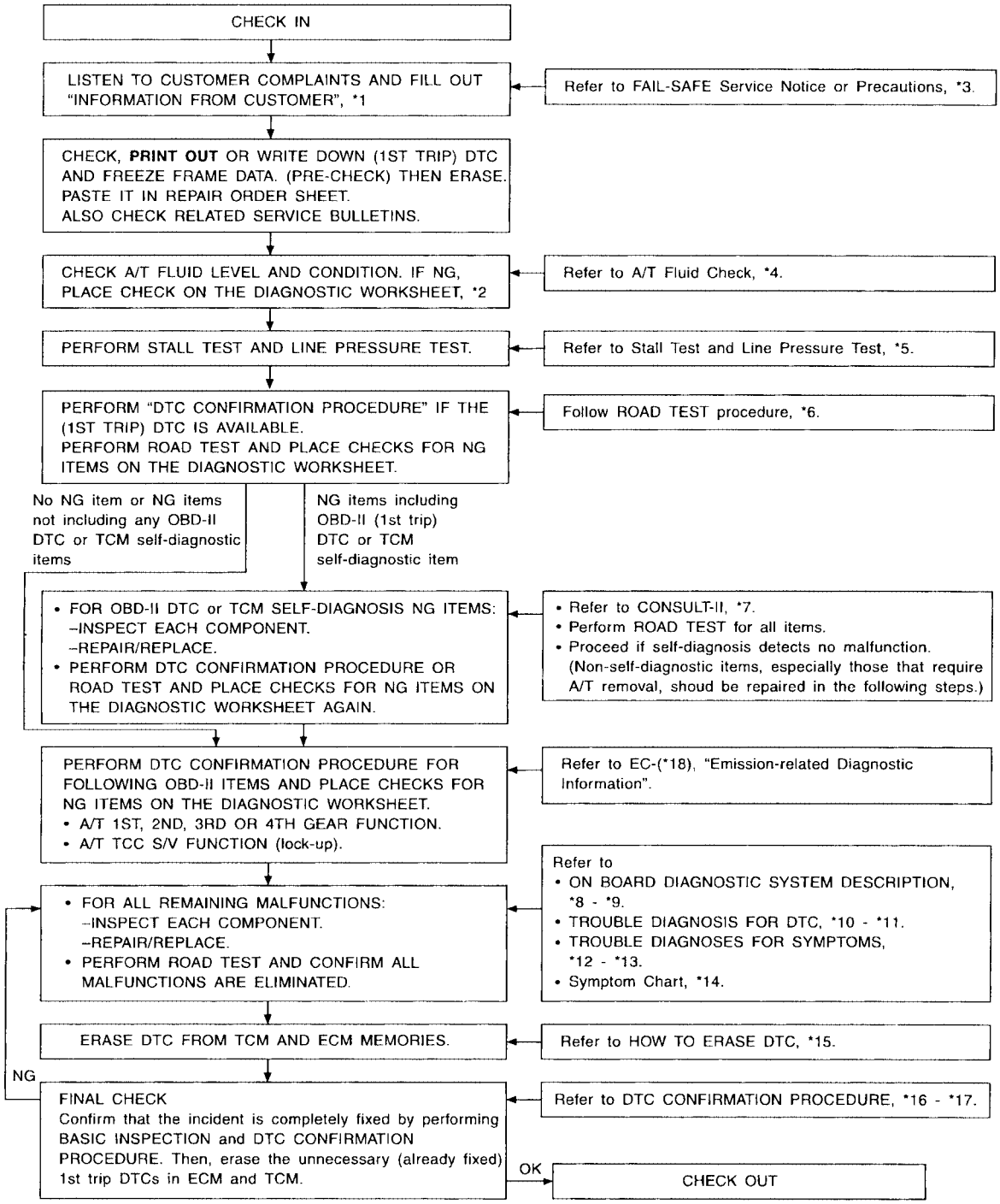

SAT086JI

*1: AT-60	*2: AT-61	*3: AT-12
*4: AT-65	*5: AT-68, AT-71	*6: AT-72
*7: AT-42	*8: AT-38	*9: AT-38
*10: AT-38	*11: AT-38	*12: AT-209
*13: AT-209	*14: AT-87	*15: AT-40
*16: AT-106	*17: AT-189	*18: EC-55

TROUBLE DIAGNOSIS - BASIC INSPECTION

PFP:00000

A/T Fluid Check

UCS000MX

FLUID LEAKAGE CHECK

1. Clean area suspected of leaking. — for example, mating surface of converter housing and transmission case.
2. Start engine, apply foot brake, place selector lever in D position and wait a few minutes.
3. Stop engine.

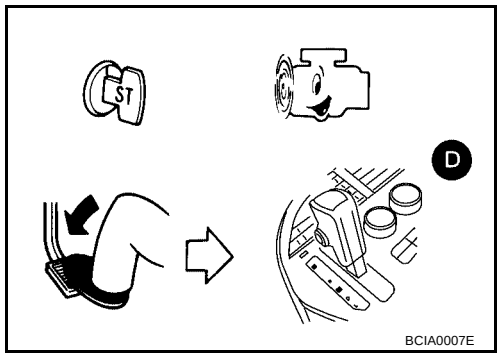

4. Check for fresh leakage.

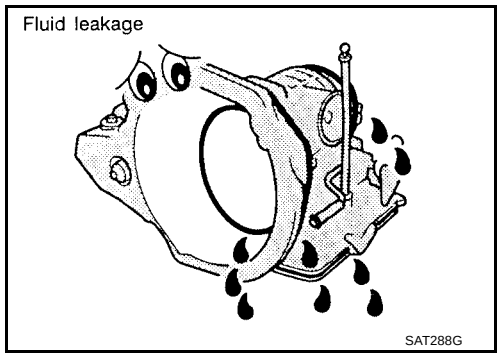

FLUID CONDITION CHECK

Fluid status	Conceivable Cause	Required Operation
Varnished (viscous varnish state)	Clutch, brake scorched	Replace the A/T fluid and check the A/T main unit and the vehicle for malfunctions (wire harnesses, cooler pipes, etc.)
Milky white or cloudy	Water in the fluid	Replace the A/T fluid and check for places where water is getting in.
Large amount of metal powder mixed in	Unusual wear of sliding parts within A/T	Replace the A/T fluid and check for improper operation of the A/T.

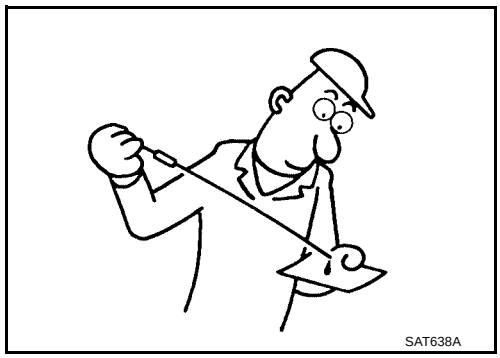

FLUID LEVEL CHECK

Refer to MA-21, "Checking A/T Fluid" .

A/T Fluid Cooler Cleaning

UCS0015J

Whenever an automatic transaxle is repaired, overhauled, or replaced, the A/T fluid cooler mounted in the radiator must be inspected and cleaned.
Metal debris and friction material, if present, can become trapped in the A/T fluid cooler. This debris can contaminate the newly serviced A/T or, in severe cases, can block or restrict the flow of A/T fluid. In either case, malfunction of the newly serviced A/T may result.
Debris, if present, may build up as A/T fluid enters the cooler inlet. It will be necessary to back flush the cooler through the cooler outlet in order to flush out any built up debris.

A/T FLUID COOLER CLEANING PROCEDURE

1. Position an oil pan under the automatic transaxle's inlet and outlet cooler hoses.
2. Identify the inlet and outlet fluid cooler hoses.

3. Disconnect the fluid cooler inlet and outlet rubber hoses from the steel cooler tubes or bypass valve.

   NOTE:
   Replace the cooler hoses if rubber material from the hose remains on the tube fitting.
4. Allow any A/T fluid that remains in the cooler hoses to drain into the oil pan.

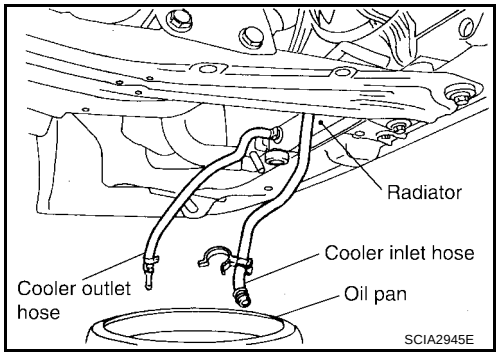

5. Insert the extension adapter hose of a can of Transmission Cooler Cleaner (Nissan P/N 999MP-AM006) into the cooler outlet hose.

   CAUTION:
   - **Wear safety glasses and rubber gloves when spraying the Transmission Cooler Cleaner.**
   - **Spray cooler cleaner only with adequate ventilation.**
   - **Avoid contact with eyes and skin.**
   - **Do not breath vapors or spray mist.**
6. Hold the hose and can as high as possible and spray Transmission Cooler Cleaner in a continuous stream into the cooler outlet hose until fluid flows out of the cooler inlet hose for 5 seconds.

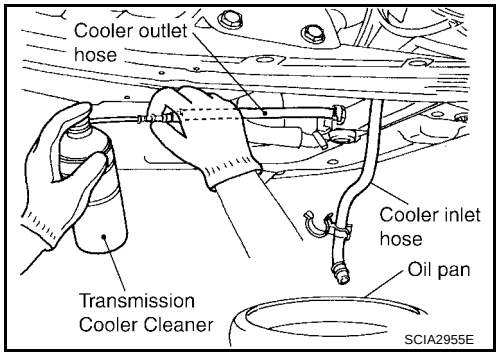

7. Insert the tip of an air gun into the end of the cooler outlet hose.
8. Wrap a shop rag around the air gun tip and of the cooler outlet hose.

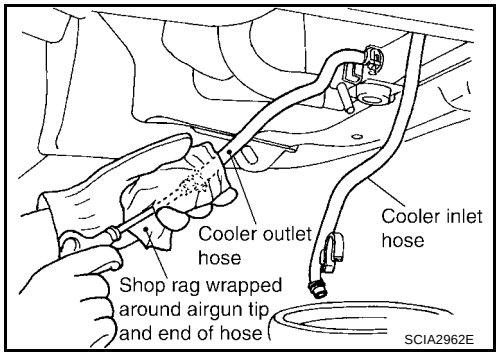

9. Blow compressed air regulated to 5 - 9 kg/cm^2 (70 - 130 psi) through the cooler outlet hose for 10 seconds to force out any remaining fluid.
10. Repeat steps 5 through 9 three additional times.
11. Position an oil pan under the banjo bolts that connect the fluid cooler steel lines to the transaxle.
12. Remove the banjo bolts.
13. Flush each steel line from the cooler side back toward the transaxle by spraying Transmission Cooler Cleaner in a continuous stream for 5 seconds.
14. Blow compressed air regulated to 5 - 9 kg/cm^2 (70 - 130 psi) through each steel line from the cooler side back toward the transaxle for 10 seconds to force out any remaining fluid.
15. Ensure all debris is removed from the steel cooler lines.
16. Ensure all debris is removed from the banjo bolts and fittings.
17. Perform AT-66, "A/T FLUID COOLER DIAGNOSIS PROCEDURE" .

A/T FLUID COOLER DIAGNOSIS PROCEDURE

NOTE:
Insufficient cleaning of the cooler inlet hose exterior may lead to inaccurate debris identification.

1. Position an oil pan under the automatic transaxle's inlet and outlet cooler hoses.
2. Clean the exterior and tip of the cooler inlet hose.

3. Insert the extension adapter hose of a can of Transmission Cooler Cleaner (Nissan P/N 999MP-AM006) into the cooler outlet hose.

CAUTION:
- **Wear safety glasses and rubber gloves when spraying the Transmission Cooler Cleaner.**
- **Spray cooler cleaner only with adequate ventilation.**
- **Avoid contact with eyes and skin.**
- **Do not breath vapors or spray mist.**

4. Hold the hose and can as high as possible and spray Transmission Cooler Cleaner in a continuous stream into the cooler outlet hose until fluid flows out of the cooler inlet hose for 5 seconds.

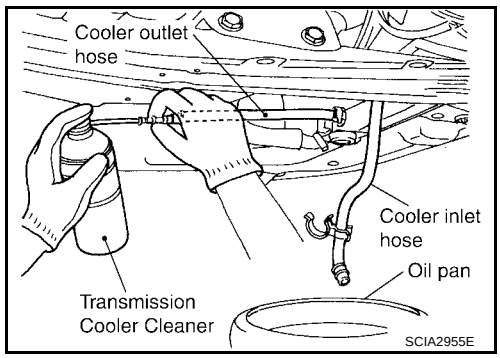

5. Tie a common white, basket-type coffee filter to the end of the cooler inlet hose.

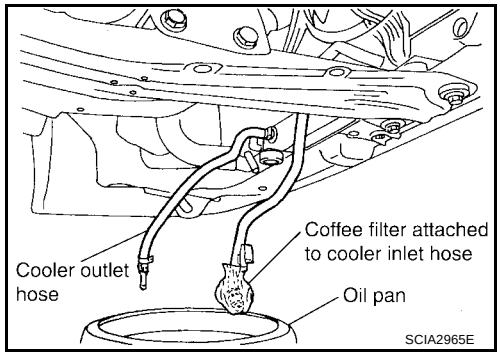

6. Insert the tip of an air gun into the end of the cooler outlet hose.
7. Wrap a shop rag around the air gun tip and end of cooler outlet hose.
8. Blow compressed air regulated to 5 - 9 kg/cm^2 (70 - 130 psi) through the cooler outlet hose to force any remaining A/T fluid into the coffee filter.
9. Remove the coffee filter from the end of the cooler inlet hose.
10. Perform AT-67, "A/T FLUID COOLER INSPECTION PROCEDURE" .

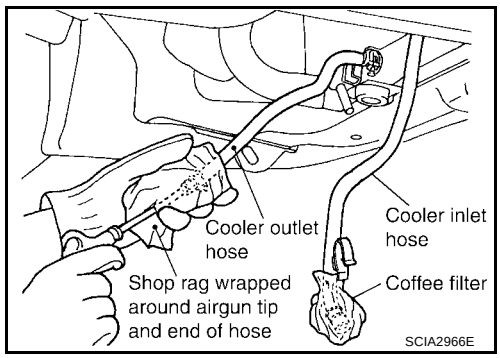

A/T FLUID COOLER INSPECTION PROCEDURE

1. Inspect the coffee filter for debris.

a. If small metal debris less than 1mm (0.040 in) in size or metal powder is found in the coffee filter, this is normal. If normal debris is found, the A/T fluid cooler/radiator can be re-used and the procedure is ended.

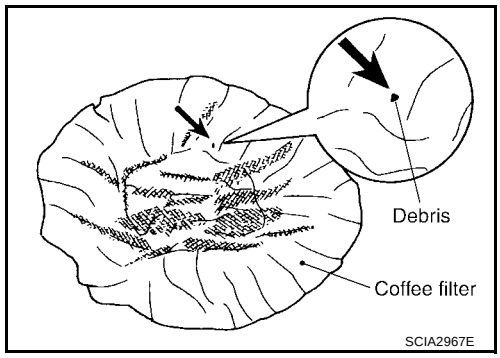

b. If one or more pieces of debris are found that are over 1mm in size and/or peeled clutch facing material is found in the coffee filter, the fluid cooler is not serviceable. The radiator/fluid cooler must be replaced and the inspection procedure is ended.

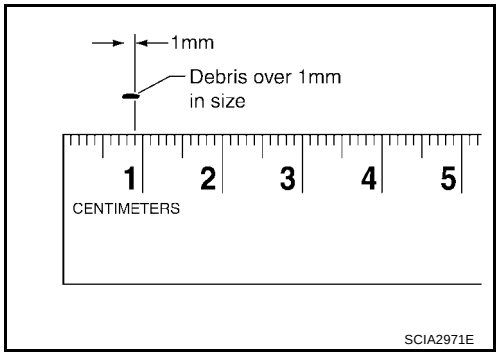

A/T FLUID COOLER FINAL INSPECTION

After performing all procedures, ensure that all remaining oil is cleaned from all components.

Stall Test

UCS000MY

STALL TEST PROCEDURE

1. Check A/T fluid and engine oil levels. If necessary, add fluid and oil.
2. Drive vehicle for approximately 10 minutes or until fluid and oil reach operating temperature.

   ATF operating temperature :50 - 80°C (122 - 176°F)

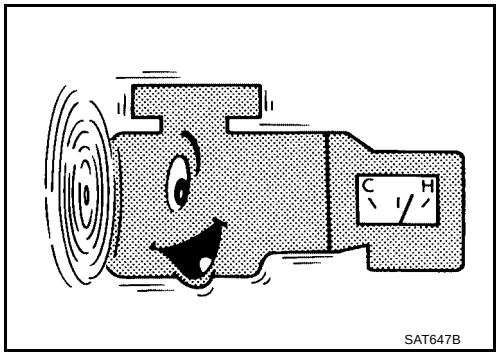

3. Set parking brake and block wheels.
4. Install a tachometer where it can be seen by driver during test.
   - **It is good practice to mark the point of specified engine rpm on indicator.**

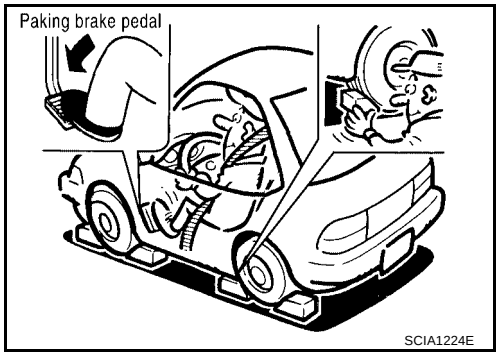

5. Start engine, apply foot brake, and place selector lever in D position.
6. Accelerate to wide open throttle gradually while applying foot brake.
7. Quickly note the engine stall revolution and immediately release throttle.
   - **During test, never hold throttle wide open for more than 5 seconds.**

   Stall revolution : 2,500 - 3,050 rpm

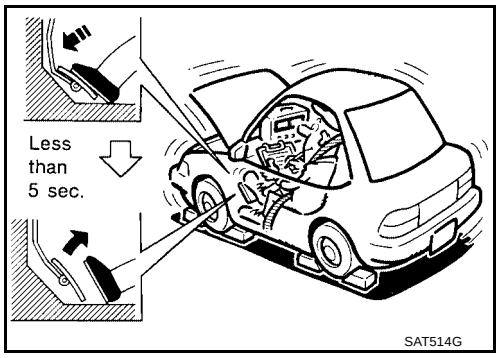

8. Move selector lever to N position.
9. Cool off ATF.
   - **Run engine at idle for at least one minute.**
10. Repeat steps 5 through 9 with selector lever in L and R positions.

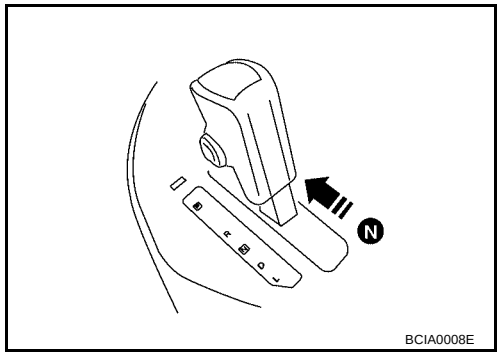

JUDGEMENT OF STALL TEST

The test result and possible damaged components relating to each result are shown in the illustrations on next page.
In order to pinpoint the possible damaged components, refer to AT-64, "WORK FLOW CHART" .

NOTE:
Stall revolution is too high in D or L position:

- Slippage occurs in 1st gear but not in 2nd and 3rd gears. ..... Low one-way clutch slippage
- Slippage occurs in the following gears:
  1st through 3rd gears in D position and engine brake functions.
  1st and 2nd gears in L position and engine brake functions with accelerator pedal released (fully closed throttle). ..... Forward clutch or forward one-way clutch slippage

Stall revolution is too high in R position:

- Engine brake does not function in R position. ..... Low & reverse brake slippage
- Engine brake functions in R position. ..... Reverse clutch slippage

Stall revolution within specifications:

- Vehicle does not achieve speed of more than 80 km/h (50 MPH). ..... One-way clutch seizure in torque converter housing

CAUTION:
Be careful since automatic fluid temperature increases abnormally.

- Slippage occurs in 3rd and 4th gears in D position. ..... High clutch slippage
- Slippage occurs in 2nd and 4th gear in D position. ..... Brake band slippage
- Engine brake does not function in 2nd and 3rd gears in D position with overdrive control switch set to ON and 2nd gear in L position. ..... Overrun clutch slippage

Stall revolution less than specifications:

- Poor acceleration during starts. ..... One-way clutch seizure in torque converter

Selector lever position	Judgement		
D	H	O	L
L	H	O	L
R	O	H	L

O : Stall revolution is normal.
H : Stall revolution is higher than specified.
L : Stall revolution is lower than specified.

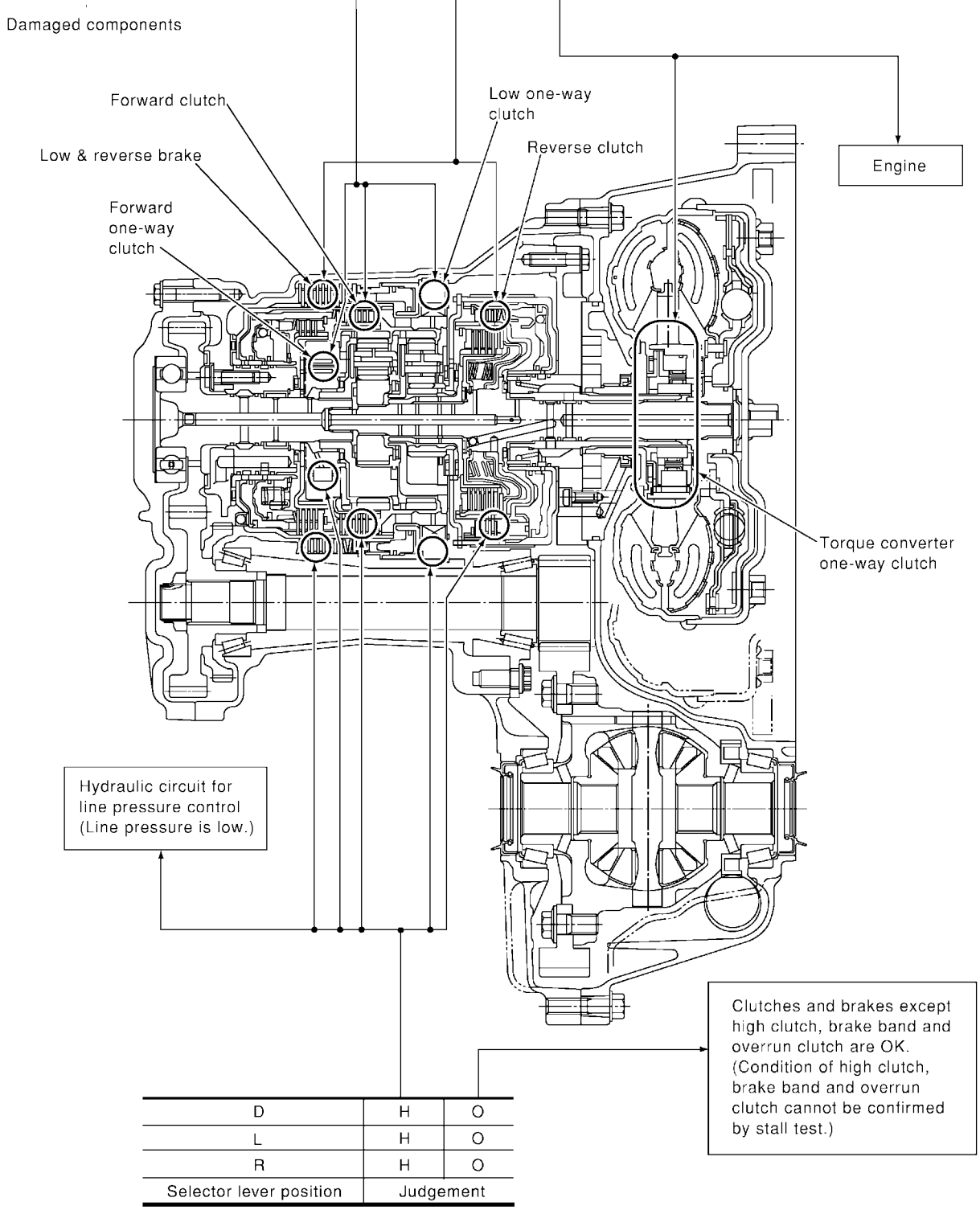

Selector lever position	Judgement	
D	H	O
L	H	O
R	H	O

SCIA3439E

Line Pressure Test

UCS000MZ

LINE PRESSURE TEST PORTS

Location of line pressure test ports are shown in the illustration.

- **Always replace pressure plugs as they are self-sealing bolts.**

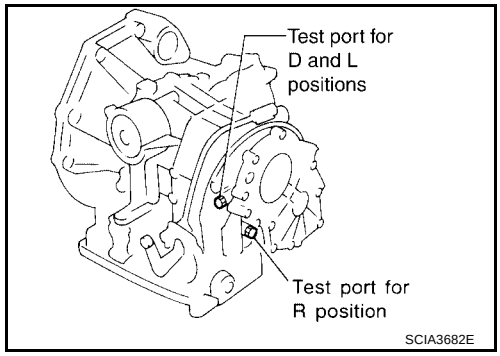

LINE PRESSURE TEST PROCEDURE

1. Check A/T fluid and engine oil levels. If necessary, add fluid and oil.
2. Drive vehicle for approximately 10 minutes or until fluid and oil reach operating temperature.

   ATF operating temperature :50 - 80°C (122 - 176°F)

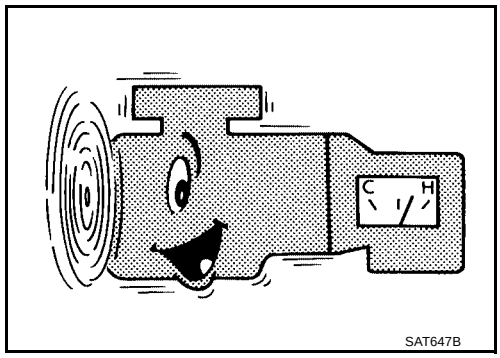

3. Install pressure gauge to corresponding line pressure port.

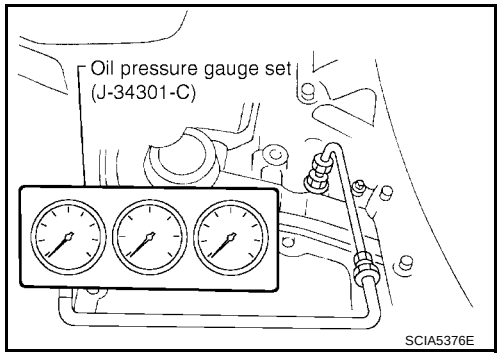

4. Set parking brake and block wheels.
   - **Continue to depress brake pedal fully while line pressure test is being performed at stall speed.**

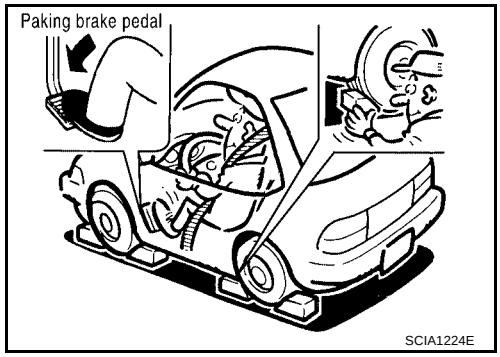

5. Start engine and measure line pressure at idle and stall speed.
   - **When measuring line pressure at stall speed, follow the stall test procedure.**

Line pressure : AT-365, "Line Pressure"

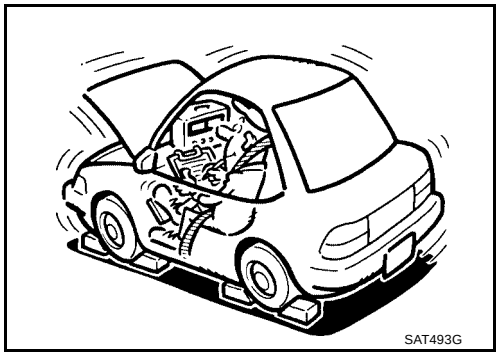

JUDGEMENT OF LINE PRESSURE TEST

Judgement		Suspected parts
At idle	Line pressure is low in all positions.	● Oil pump wear ● Control piston damage ● Pressure regulator valve or plug sticking ● Spring for pressure regulator valve damaged ● Fluid pressure leakage between oil strainer and pressure regulator valve ● Clogged strainer
	Line pressure is low in particular position.	● Fluid pressure leakage between manual valve and particular clutch ● For example, line pressure is: – Low in R positions, but – Normal in D and L positions. Therefore, fluid leakage exists at or around low & reverse brake circuit. Refer to AT-23, "CLUTCH AND BAND CHART" .
	Line pressure is high.	● Maladjustment of accelerator pedal position sensor ● A/T fluid temperature sensor damaged ● Line pressure solenoid valve sticking ● Short circuit of line pressure solenoid valve circuit ● Pressure modifier valve sticking ● Pressure regulator valve or plug sticking ● Open in dropping resistor circuit
At stall speed	Line pressure is low.	● Maladjustment of accelerator pedal position sensor ● Line pressure solenoid valve sticking ● Short circuit of line pressure solenoid valve circuit ● Pressure regulator valve or plug sticking ● Pressure modifier valve sticking ● Pilot valve sticking

Road Test

UCS000N0

DESCRIPTION

- The purpose of the test is to determine overall performance of A/T and analyze causes of problems.
- The road test consists of the following three parts:

1. Check before engine is started
2. Check at idle
3. Cruise test

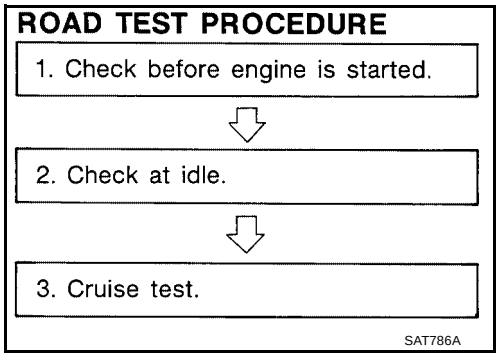

- Before road test, familiarize yourself with all test procedures and items to check.
- Conduct tests on all items until specified symptom is found. Troubleshoot items which check out No Good after road test. Refer to AT-38, "ON BOARD DIAGNOSTIC SYSTEM DESCRIPTION" , and AT-209, "TROUBLE DIAGNOSIS FOR SYMPTOMS" .

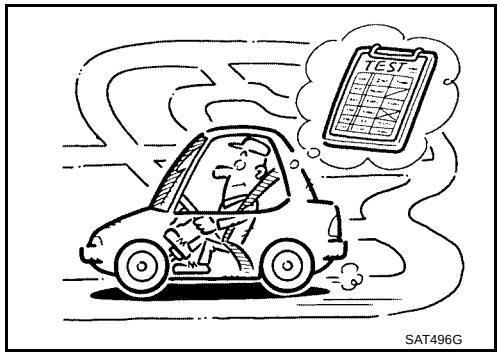

1. CHECK BEFORE ENGINE IS STARTED

1. CHECK O/D OFF INDICATOR LAMP

1. Park vehicle on flat surface.
2. Move selector lever to P position.
3. Turn ignition switch to OFF position. Wait at least 5 seconds.
4. Set overdrive control switch to ON position.
5. Turn ignition switch to ON position. (Do not start engine.)
6. Does O/D OFF indicator lamp come on for about 2 seconds?

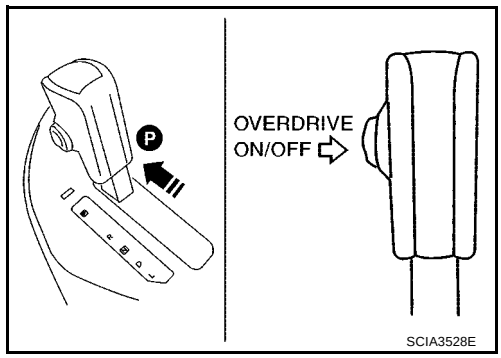

Yes or No

Yes >> GO TO 2.

No >> Stop ROAD TEST. Go to AT-212, "O/D OFF Indicator Lamp Does Not Come On" .

2. CHECK O/D OFF INDICATOR LAMP

Does O/D OFF indicator lamp flicker for about 8 seconds?

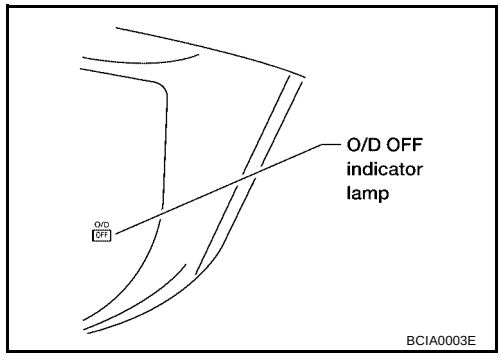

Yes or No

Yes >> TCM is under fail-safe mode. Perform self-diagnosis and check NG items on the DIAGNOSTIC WORK-SHEET, AT-61 . Refer to AT-42, "SELF-DIAGNOSTIC PROCEDURE (WITH CONSULT-II)" or AT-54, "TCM SELF-DIAGNOSTIC PROCEDURE (NO TOOLS)" .

No >> 1. Turn ignition switch to OFF position.
2. Perform self-diagnosis and note NG items. Refer to AT-42, "SELF-DIAGNOSTIC PROCEDURE (WITH CONSULT-II)" or AT-54, "TCM SELF-DIAG-NOSTIC PROCEDURE (NO TOOLS)" .
3. GO TO AT-74, "2. CHECK AT IDLE" .

2. CHECK AT IDLE

1. CHECK ENGINE START

1. Park vehicle on flat surface.
2. Move selector lever to P or N position.
3. Turn ignition switch to OFF position.
4. Turn ignition switch to START position.
5. Is engine started?

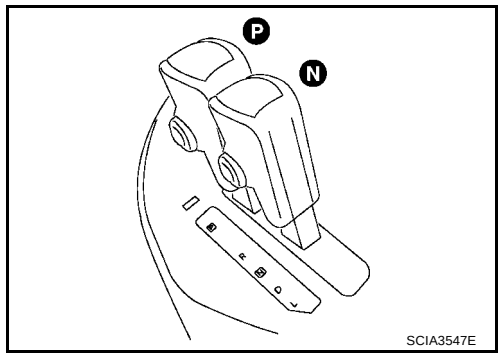

Yes or No

Yes >> GO TO 2.

No >> Stop ROAD TEST. Mark the box on the DIAGNOSTIC WORKSHEET. Go to AT-214, "Engine Cannot Be Started in P and N Position" .

2. CHECK ENGINE START

1. Turn ignition switch to OFF position.
2. Push and hold shift lock release button.
3. Move selector lever to D, L or R position.
4. Turn ignition switch to START position.
5. Is engine started?

Yes or No

Yes >> Stop ROAD TEST. Mark the box on the DIAGNOSTIC WORKSHEET. Go to AT-214, "Engine Cannot Be Started in P and N Position" .

No >> GO TO 3.

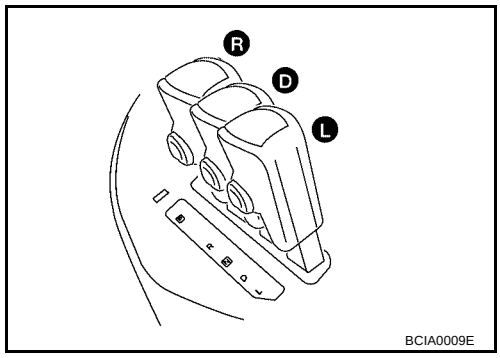

3. CHECK VEHICLE MOVE

1. Turn ignition switch to OFF position.
2. Move selector lever to P position.
3. Release parking brake.

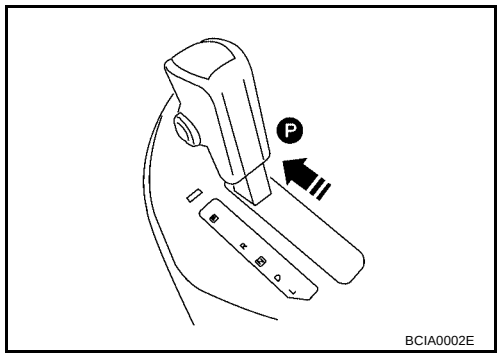

4. Push vehicle forward or backward.
5. Does vehicle move when it is pushed forward or backward?
6. Apply parking brake.

Yes or No

Yes >> Mark the box “In P Position, Vehicle Moves Forward Or Backward When Pushed” on the DIAGNOSTIC WORKSHEET. Continue ROAD TEST.

No >> GO TO 4.

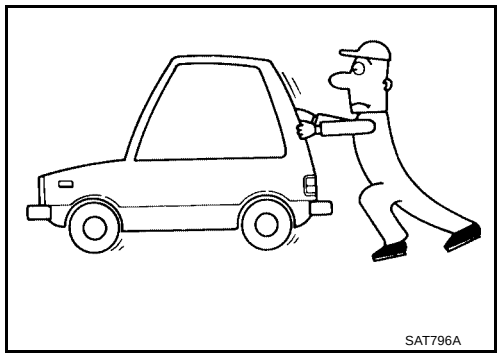

4. CHECK VEHICLE MOVE

1. Apply parking brake.
2. Move selector lever to N position.
3. Start engine.
4. Release parking brake.
5. Does vehicle move forward or backward?

Yes or No

Yes >> Mark the box “In N Position, Vehicle Moves” on the DIAGNOSTIC WORKSHEET. Continue ROAD TEST.

No >> GO TO 5.

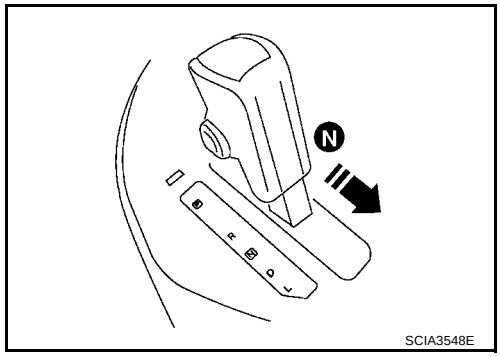

5. CHECK SHIFT LOCK

1. Apply foot brake.

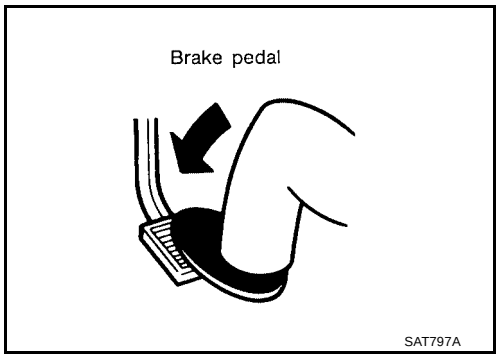

2. Move selector lever to R position.
3. Is there large shock when changing from N to R position?

Yes or No

Yes >> Mark the box “Large shock N →R Position” on the DIAGNOSTIC WORKSHEET. Continue ROAD TEST.
No >> GO TO 6.

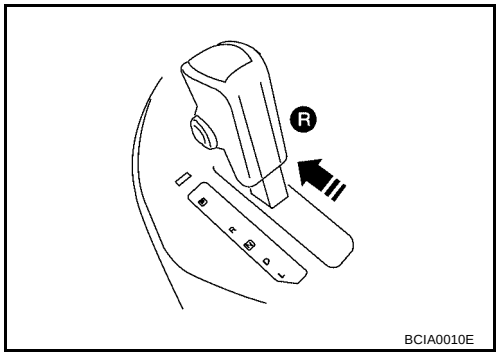

6. CHECK VEHICLE MOVE

1. Release foot brake for several seconds.
2. Does vehicle creep backward when foot brake is released?

Yes or No

Yes >> GO TO 7.
No >> Mark the box “Vehicle Does Not Creep Backward In R Position” on the DIAGNOSTIC WORKSHEET. Continue ROAD TEST.

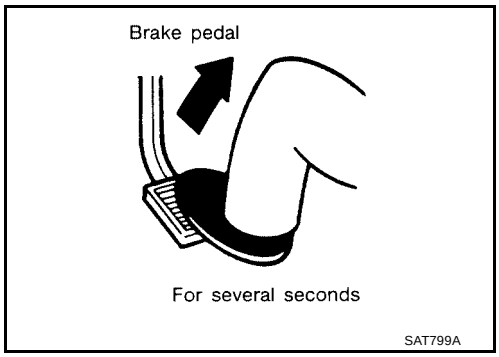

7. CHECK VEHICLE MOVE

1. Move selector lever to D and L positions and check if vehicle creeps forward.
2. Does vehicle creep forward in all two positions?

Yes or No

Yes >> Go to AT-76, "3. CRUISE TEST" .
No >> Mark the box “Vehicle Does Not Creep Forward In D Or L Position” on the DIAGNOSTIC WORKSHEET. Continue ROAD TEST.

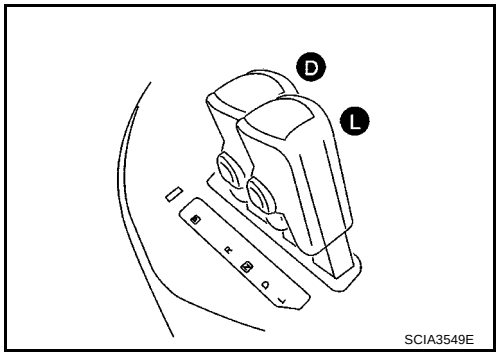

3. CRUISE TEST

- Check all items listed in Parts 1 through 3.

With CONSULT-II

- Using CONSULT-II, conduct a cruise test and record the result.
- Print the result and ensure that shifts and lock-ups take place as per Shift Schedule. Refer to AT-364, "Shift Schedule"

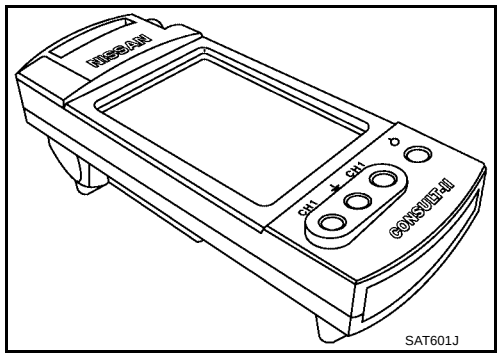

SAT601J

CONSULT-II Setting Procedure

CAUTION:
If CONSULT-II is used with no connection of CONSULT-II CONVERTER, malfunctions might be detected in self-diagnosis depending on control unit which carry out CAN communication.

- For details, refer to the separate “CONSULT-II Operations Manual”.

1. Turn ignition switch OFF.
2. Connect CONSULT-II and CONSULT-II CONVERTER to data link connector, which is located in left side dash panel.
3. Turn ignition switch ON.

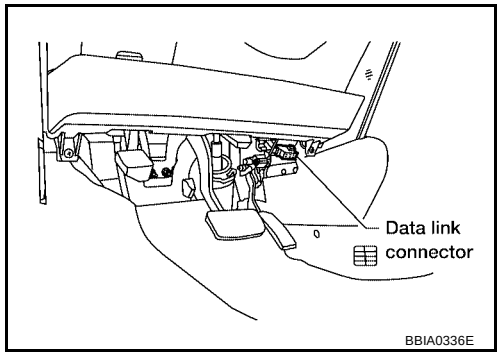

BBIA0336E

4. Touch “START (NISSAN BASED VHCL)”.

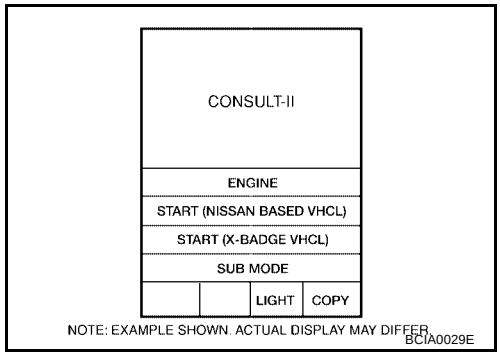

BCIA0029E

5. Touch “A/T”.
   If “A/T” is not indicated, go to GI-37, "CONSULT-II Data Link Connector (DLC) Circuit" .

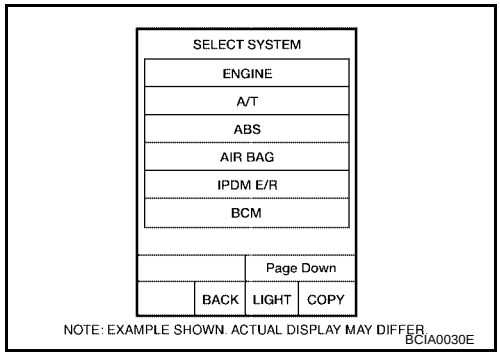

BCIA0030E

6. Touch “DATA MONITOR”.

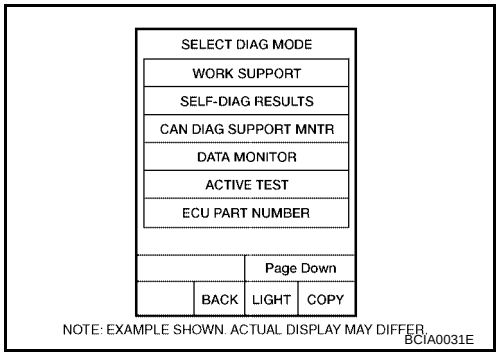

7. Touch “MAIN SIGNALS” or “TCM INPUT SIGNALS”.
8. See “Numerical Display”, “Barchart Display” or “Line Graph Display”.

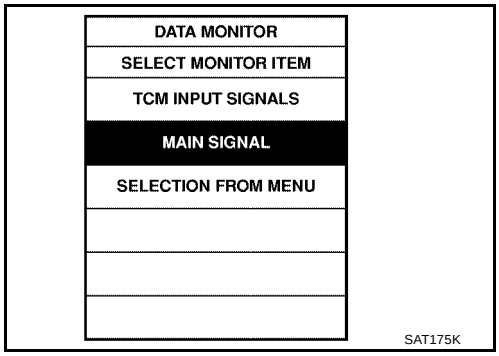

9. Touch “SETTING” to set recording condition (“AUTO TRIG” or “MANU TRIG”) and touch “BACK”.
10. Touch “Start”.

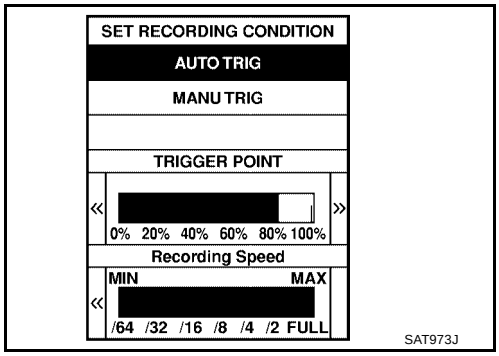

11. When performing cruise test, touch “RECORD”.

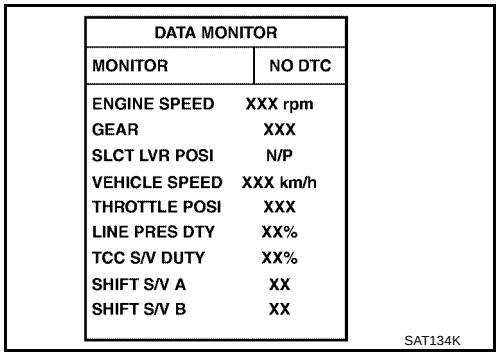

12. After finishing cruise test part 1, touch “STOP”.

DATA MONITOR		
Recording Data	X%	DTC DETECTED
ENGINE SPEED	XXX rpm	
GEAR	XXX	
SLCT LVR POSI	N/P	
VEHICLE SPEED	XXX km/h	
THROTTLE POSI	XXX	
LINE PRES DTY	XX%	
TCC S/V DUTY	XX%	
SHIFT S/V A	XX	
SHIFT S/V B	XX	

SAT135K

13. Touch “STORE” and touch “BACK”.

REAL-TIME DIAG
ENG SPEED SIG

SAT987J

STORE	
SYSTEM	SAVE REC DATA

SAT974J

14. Touch “DISPLAY”.
15. Touch “PRINT”.
16. Check the monitor data printed out.
17. Continue cruise test part 2 and 3.

Trigger	VHCL S/SEN A/T	VHCL S/SEN MTR	THRTL POSI SEN
	km/h	km/h	V

SAT975J

Without CONSULT-II

- Throttle position sensor can be checked by voltage across terminals 41 (W) and 42 (B) of TCM.

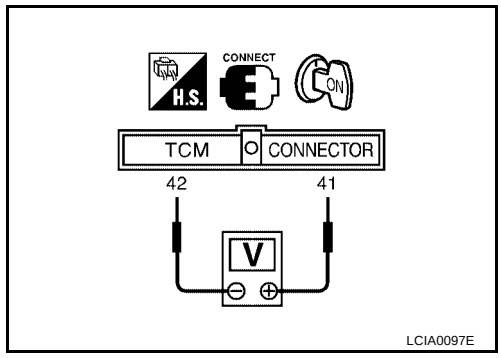

Cruise Test — Part 1

1. CHECK STARTING GEAR (D_1) POSITION

1. Drive vehicle for approximately 10 minutes to warm engine oil and ATF up to operating temperature.

   ATF operating temperature : 50 - 80°C (122 - 176°F)

2. Park vehicle on flat surface.
3. Set overdrive control switch to ON position.
4. Move selector lever to P position.
5. Start engine.

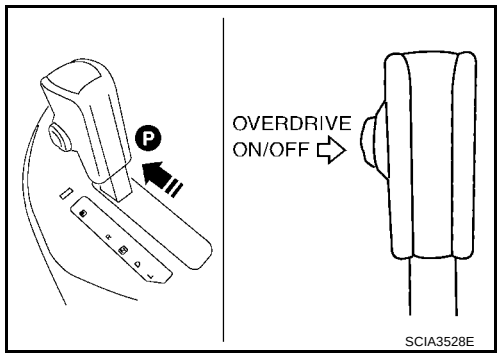

6. Move selector lever to D position.

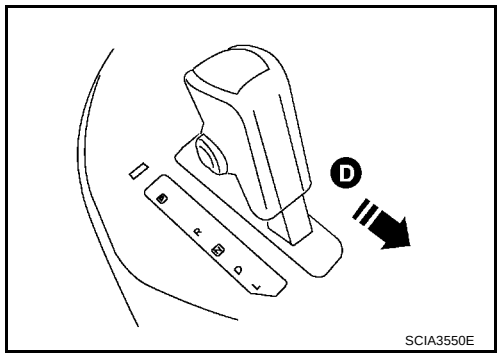

7. Accelerate vehicle by constantly depressing accelerator pedal half-way.
8. Does vehicle start from D_1 ?

   Read gear position.

Yes or No

Yes >> GO TO 2.
No >> Mark the box of "Vehicle Cannot Be Started From D_1" on the DIAGNOSTIC WORKSHEET. Continue ROAD TEST.

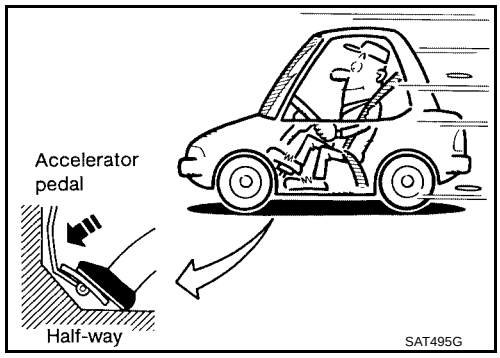

2. CHECK SHIFT UP (D_1 TO D_2)

Does A/T shift from D_1 to D_2 at the specified speed?

Read gear position, throttle opening and vehicle speed.

Specified speed when shifting from D_1 to D_2

: Refer to AT-364, "Shift Schedule" .

Yes or No

Yes >> GO TO 3.
No >> Mark the box of "A/T Does Not Shift: $D_1 \rightarrow D_2$ or Does Not Kickdown: $D_4 \rightarrow D_2$" on the DIAGNOSTIC WORKSHEET. Continue ROAD TEST. Continue ROAD TEST.

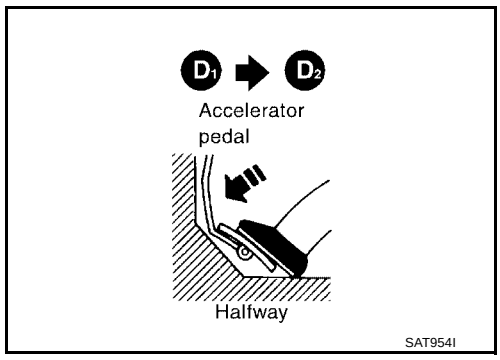

3. CHECK SHIFT UP (D_2 TO D_3)

Does A/T shift from D_2 to D_3 at the specified speed?

Read gear position, throttle opening and vehicle speed.

Specified speed when shifting from D_2 to D_3

: Refer to AT-364, "Shift Schedule" .

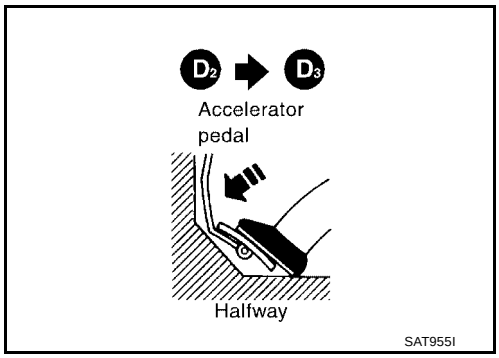

Yes or No

Yes >> GO TO 4.
No >> Mark the box of "A/T Does Not Shift: $D_2 \rightarrow D_3$" on the DIAGNOSTIC WORKSHEET. Continue ROAD TEST. Continue ROAD TEST.

4. CHECK SHIFT UP (D_3 TO D_4)

Does A/T shift from D_3 to D_4 at the specified speed?

Read gear position, throttle opening and vehicle speed.

Specified speed when shifting from D_3 to D_4

: Refer to AT-364, "Shift Schedule" .

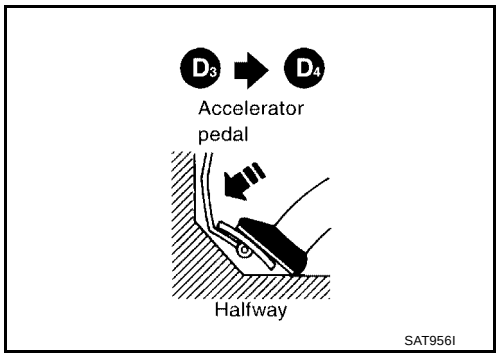

Yes or No

Yes >> GO TO 5.
No >> Mark the box of "A/T Does Not Shift: $D_3 \rightarrow D_4$" on the DIAGNOSTIC WORKSHEET. Continue ROAD TEST. Continue ROAD TEST.

5. CHECK LOCK-UP (D_4 TO D_4 L/U)

Does A/T perform lock-up at the specified speed?

Read vehicle speed, throttle opening when lock-up duty becomes 94%.

Specified speed when lock-up occurs

: Refer to AT-364, "Shift Schedule" .

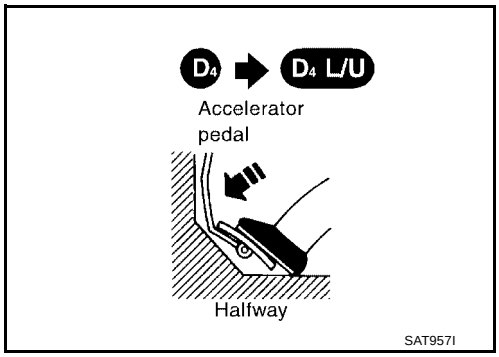

Yes or No

Yes >> GO TO 6.
No >> Mark the box of "A/T Does Not Perform Lock-up" on the DIAGNOSTIC WORKSHEET. Continue ROAD TEST.

6. CHECK HOLD LOCK-UP

Does A/T hold lock-up condition for more than 30 seconds?

Yes or No

Yes >> GO TO 7.
No >> Mark the box of "A/T Does Not Hold Lock-up Condition" on the DIAGNOSTIC WORKSHEET. Continue ROAD TEST.

7. CHECK SHIFT DOWN (D_4 L/U TO D_4)

1. Release accelerator pedal.
2. Is lock-up released when accelerator pedal is released?

Yes or No

Yes >> GO TO 8.

No >> Mark the box of “Lock-up Is Not Released” on the DIAGNOSTIC WORKSHEET. Continue ROAD TEST.

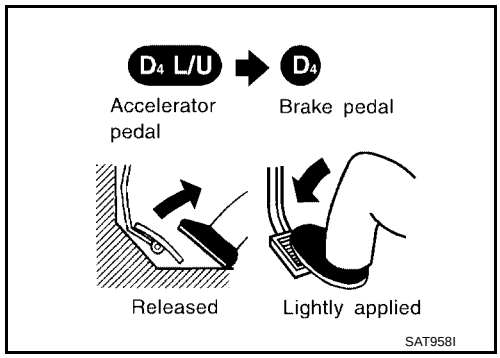

8. CHECK SHIFT DOWN (D_4 TO D_3)

1. Decelerate vehicle by applying foot brake lightly.
2. Does engine speed return to idle smoothly when A/T is shifted from D_4 to D_3 ?

Read gear position and engine speed.

Yes or No

Yes >> 1. Stop vehicle.
2. Go to AT-84, "Cruise Test — Part 2" .

No >> Mark the box of “Engine Speed Does Not Return To Idle (Light Braking $D_4 \rightarrow D_3$)” on the DIAGNOSTIC WORKSHEET. Continue ROAD TEST.

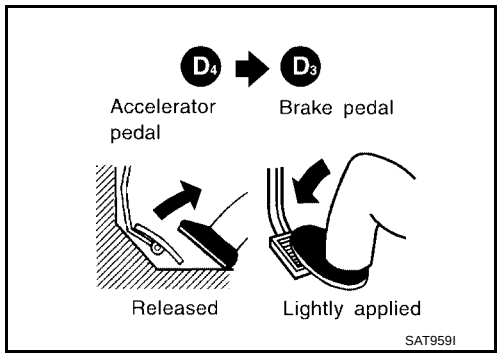

Cruise Test — Part 2

1. CHECK STARTING GEAR (D_1) POSITION

1. Confirm overdrive control switch is in ON position.
2. Confirm gear selector lever is in D position.
3. Accelerate vehicle by half throttle again.
4. Does vehicle start from D_1 ?

Read gear position.

Yes or No

Yes >> GO TO 2.
No >> Mark the box of "Vehicle Does Not Start From D_1 " on the DIAGNOSTIC WORKSHEET. Continue ROAD TEST.

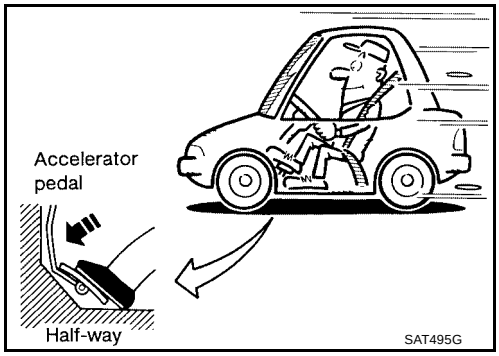

2. CHECK SHIFT UP AND SHIFT DOWN (D_3 TO D_4 TO D_2)

1. Accelerate vehicle to 80 km/h (50 MPH) as shown in illustration.
2. Release accelerator pedal and then quickly depress it fully.
3. Does A/T shift from D_4 to D_2 as soon as accelerator pedal is depressed fully?

Read gear position and throttle opening.

Yes or No

Yes >> GO TO 3.
No >> Mark the box of "A/T Does Not Shift: $D_1 \rightarrow D_2$ or Does Not Kickdown: $D_4 \rightarrow D_2$ " on the DIAGNOSTIC WORKSHEET. Continue ROAD TEST.

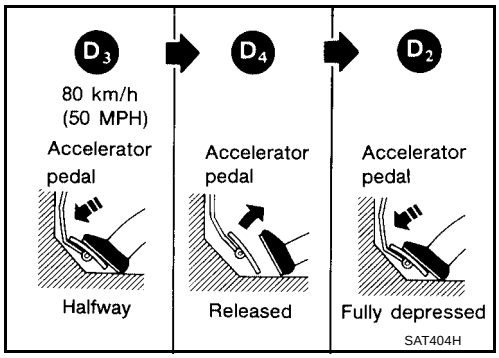

3. CHECK SHIFT UP (D_2 TO D_3)

Does A/T shift from D_2 to D_3 at the specified speed?

Read gear position, throttle opening and vehicle speed.

Specified speed when shifting from D_2 to D_3

: Refer to AT-364, "Shift Schedule" .

Yes or No

Yes >> GO TO 4.
No >> Mark the box of "A/T Does Not Shift: $D_2 \rightarrow D_3$ " on the DIAGNOSTIC WORKSHEET. Continue ROAD TEST.

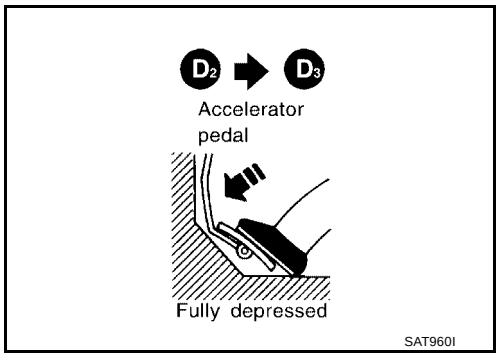

4. CHECK SHIFT UP (D_3 TO D_4) AND ENGINE BRAKE

Release accelerator pedal after shifting from D_2 to D_3 .
Does A/T shift from D_3 to D_4 and does vehicle decelerate by engine brake?

Read gear position, throttle opening and vehicle speed.

Yes or No

Yes >> 1. Stop vehicle.
2. Go to AT-85, "Cruise Test — Part 3" .
No >> Mark the box of "A/T Does Not Shift: $D_3 \rightarrow D_4$ " on the DIAGNOSTIC WORKSHEET. Continue ROAD TEST.

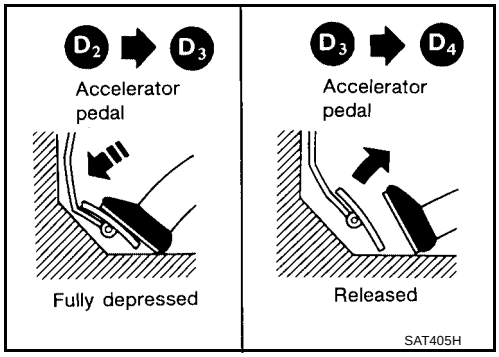

Cruise Test — Part 3

1. VEHICLE SPEED (D_4) POSITION

1. Confirm overdrive control switch is in ON position.
2. Confirm gear selector lever is in D position.
3. Accelerate vehicle using half-throttle to D_4.

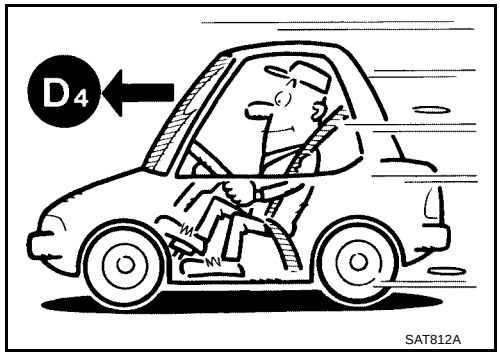

4. Release accelerator pedal.

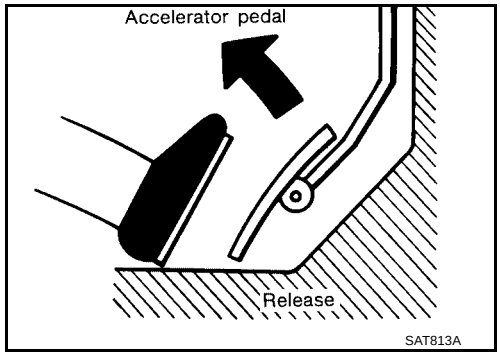

5. Set overdrive control switch to OFF position while driving in D_4.
6. Does A/T shift from D_4 to D_3 (O/D OFF)?

Read gear position and vehicle speed.

Yes or No

Yes >> GO TO 2.
No >> Mark the box of "A/T Does Not Shift: $D_4 \rightarrow D_3$, When Overdrive Control Switch ON → OFF" on the DIAGNOSTIC WORKSHEET. Continue ROAD TEST.

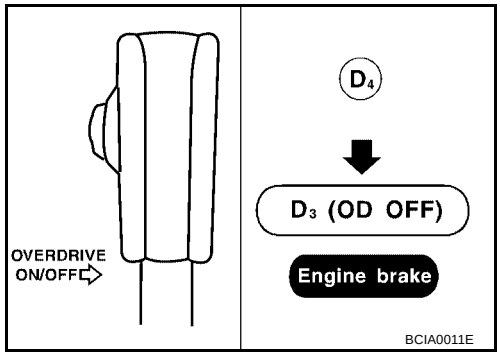

2. CHECK ENGINE BRAKE

Does vehicle decelerate by engine brake?

Yes or No

Yes >> GO TO 3.
No >> Mark the box of "Engine Speed Does Not Return To Idle (Engine Brake in D_3)" on the DIAGNOSTIC WORKSHEET. Continue ROAD TEST.

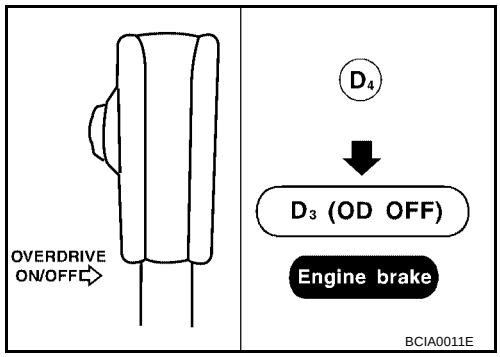

3. CHECK SHIFT DOWN (D_3 TO L_2)

1. Move selector lever from D to L position while driving in D_3 (O/D OFF).
2. Does A/T shift from D_3 (O/D OFF) to L_2 ?

Read gear position.

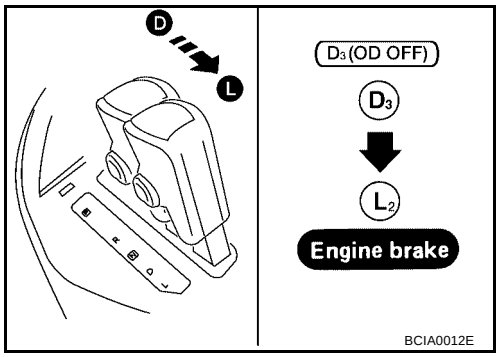

Yes or No

Yes >> GO TO 4.

No >> Mark the box of "A/T Does Not Shift: D_3 → L_2 , When Selector Lever D → L Position" on the DIAGNOSTIC WORKSHEET. Continue ROAD TEST.

4. CHECK ENGINE BRAKE

Does vehicle decelerate by engine brake?

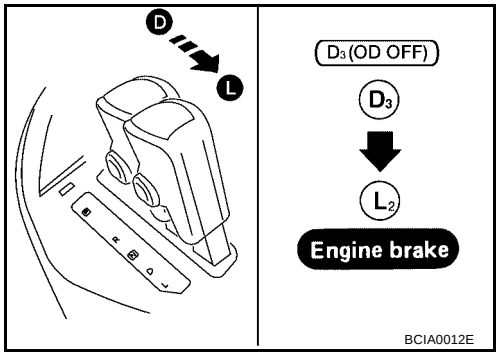

Yes or No

Yes >> 1. Stop vehicle.
2. Perform self-diagnosis. Refer to AT-54, "TCM SELF-DIAGNOSTIC PROCEDURE (NO TOOLS)" .

No >> Mark the box of "Vehicle Does Not Decelerate By Engine Brake" on the DIAGNOSTIC WORKSHEET. Stop ROAD TEST.

TROUBLE DIAGNOSIS - GENERAL DESCRIPTION

PFP:00000

Symptom Chart

UCS000N1

Numbers are arranged in order of inspection.
Perform inspections starting with number one and work up.

Items	Symptom	Condition	Diagnostic Item	Reference Page
No Lock-up Engagement/ TCC Inoperative	Torque converter is not locked up.	ON vehicle	1. Accelerator pedal position (APP) sensor	AT-178
			2. Vehicle speed sensor·A/T (Revolution sensor) and vehicle speed sensor·MTR	AT-118, AT-195
			3. Engine speed signal	AT-123
			4. A/T fluid temperature sensor	AT-112
			5. Line pressure test	AT-71
			6. Torque converter clutch solenoid valve	AT-149
			7. Control valve assembly	AT-253
		OFF vehicle	8. Torque converter	AT-268
	Torque converter clutch piston slip.	ON vehicle	1. Fluid level	AT-65
			2. Accelerator pedal position (APP) sensor	AT-178
			3. Line pressure test	AT-71
			4. Torque converter clutch solenoid valve	AT-149
			5. Line pressure solenoid valve	AT-162
			6. Control valve assembly	AT-253
		OFF vehicle	7. Torque converter	AT-268
	Lock-up point is extremely high or low.	ON vehicle	1. Accelerator pedal position (APP) sensor	AT-178
			2. Vehicle speed sensor·A/T (Revolution sensor) and vehicle speed sensor·MTR	AT-118, AT-195
			3. Torque converter clutch solenoid valve	AT-149
			4. Control valve assembly	AT-253
Shift Shock	Sharp shock in shifting from N to D position.	ON vehicle	1. Engine idling rpm	EC-37
			2. Accelerator pedal position (APP) sensor	AT-178
			3. Line pressure test	AT-71
			4. A/T fluid temperature sensor	AT-112
			5. Engine speed signal	AT-123
			6. Line pressure solenoid valve	AT-162
			7. Control valve assembly	AT-253
			8. Accumulator N-D	AT-268
		OFF vehicle	9. Forward clutch	AT-313
	Too sharp a shock in change from D_1 to D_2 .	ON vehicle	1. Accelerator pedal position (APP) sensor	AT-178
			2. Line pressure test	AT-71
			3. Accumulator servo release	AT-268
			4. Control valve assembly	AT-253
			5. A/T fluid temperature sensor	AT-112
		OFF vehicle	6. Brake band	AT-268

Items	Symptom	Condition	Diagnostic Item	Reference Page
Shift Shock	Too sharp a shock in change from D_2 to D_3.	ON vehicle	1. Accelerator pedal position (APP) sensor	AT-178
			2. Line pressure test	AT-71
			3. Control valve assembly	AT-253
		OFF vehicle	4. High clutch	AT-308
			5. Brake band	AT-268
	Too sharp a shock in change from D_3 to D_4.	ON vehicle	1. Accelerator pedal position (APP) sensor	AT-178
			2. Line pressure test	AT-71
			3. Control valve assembly	AT-253
			4. A/T fluid temperature sensor	AT-112
		OFF vehicle	5. Brake band	AT-268
			6. Overrun clutch	AT-313
			7. Forward one-way clutch	AT-322
	Gear change shock felt during deceleration by releasing accelerator pedal.	ON vehicle	1. Accelerator pedal position (APP) sensor	AT-178
			2. Line pressure test	AT-71
			3. Overrun clutch solenoid valve	AT-184
			4. Control valve assembly	AT-253
Improper Shift Timing	Too high a gear change point from D_1 to D_2, from D_2 to D_3, from D_3 to D_4.	ON vehicle	1. Accelerator pedal position (APP) sensor	AT-178
			2. Vehicle speed sensor·A/T (Revolution sensor) and vehicle speed sensor·MTR	AT-118, AT-195
			3. Shift solenoid valve A	AT-168
			4. Shift solenoid valve B	AT-173
	Gear change directly from D_1 to D_3 occurs.	ON vehicle	1. Fluid level	AT-65
			2. Accumulator servo release	AT-261
		OFF vehicle	3. Brake band	AT-268
	Too high a change point from D_4 to D_3, from D_3 to D_2, from D_2 to D_1.	ON vehicle	1. Accelerator pedal position (APP) sensor	AT-178
			2. Vehicle speed sensor·A/T (Revolution sensor) and vehicle speed sensor·MTR	AT-118, AT-195
	Kickdown does not operate when depressing pedal in D_4 within kickdown vehicle speed.	ON vehicle	1. Accelerator pedal position (APP) sensor	AT-178
			2. Vehicle speed sensor·A/T (Revolution sensor) and vehicle speed sensor·MTR	AT-118, AT-195
			3. Shift solenoid valve A	AT-168
			4. Shift solenoid valve B	AT-173
	Kickdown operates or engine overruns when depressing pedal in D_4 beyond kickdown vehicle speed limit.	ON vehicle	1. Vehicle speed sensor·A/T (Revolution sensor) and vehicle speed sensor·MTR	AT-118, AT-195
			2. Accelerator pedal position (APP) sensor	AT-178
			3. Shift solenoid valve A	AT-168
			4. Shift solenoid valve B	AT-173
	Gear change from L_2 to L_3 in L position.	ON vehicle	1. Park/neutral position (PNP) switch	AT-106
			2. Control cable adjustment	AT-258

Items	Symptom	Condition	Diagnostic Item	Reference Page
No Down Shift	Failure to change gear from D_4 to D_3 .	ON vehicle	1. Fluid level	AT-65
			2. Accelerator pedal position (APP) sensor	AT-178
			3. Overrun clutch solenoid valve	AT-184
			4. Shift solenoid valve A	AT-168
			5. Line pressure solenoid valve	AT-162
			6. Control valve assembly	AT-253
		OFF vehicle	7. Brake band	AT-268
			8. Overrun clutch	AT-313
	Failure to change gear from D_3 to D_2 or from D_4 to D_2 .	ON vehicle	1. Fluid level	AT-65
			2. Accelerator pedal position (APP) sensor	AT-178
			3. Shift solenoid valve A	AT-168
			4. Shift solenoid valve B	AT-173
			5. Control valve assembly	AT-253
		OFF vehicle	6. High clutch	AT-308
			7. Brake band	AT-268
	Failure to change gear from D_2 to D_1 or from D_3 to D_1 .	ON vehicle	1. Fluid level	AT-65
			2. Accelerator pedal position (APP) sensor	AT-178
			3. Shift solenoid valve A	AT-168
			4. Shift solenoid valve B	AT-173
			5. Control valve assembly	AT-253
		OFF vehicle	6. Low one-way clutch	AT-268
			7. High clutch	AT-308
			8. Brake band	AT-268
	Failure to change from D_3 to L_2 when changing lever into L position. AT-237	ON vehicle	1. Accelerator pedal position (APP) sensor	AT-178
			2. Shift solenoid valve B	AT-173
			3. Control valve assembly	AT-253
			4. Control cable adjustment	AT-258
		OFF vehicle	5. Brake band	AT-268

Items	Symptom	Condition	Diagnostic Item	Reference Page
No Up Shift	Failure to change gear from D_1 to D_2 .	ON vehicle	1. Control cable adjustment	AT-258
			2. Shift solenoid valve A	AT-168
			3. Control valve assembly	AT-253
			4. Vehicle speed sensor·A/T (Revolution sensor) and vehicle speed sensor·MTR	AT-118, AT-195
			5. Accelerator pedal position (APP) sensor	AT-178
		OFF vehicle	6. Brake band	AT-268
	Failure to change gear from D_2 to D_3 .	ON vehicle	1. Control cable adjustment	AT-258
			2. Shift solenoid valve B	AT-173
			3. Control valve assembly	AT-253
			4. Vehicle speed sensor·A/T (Revolution sensor) and vehicle speed sensor·MTR	AT-118, AT-195
			5. Accelerator pedal position (APP) sensor	AT-178
		OFF vehicle	6. High clutch	AT-308
			7. Brake band	AT-268
	Failure to change gear from D_3 to D_4 .	ON vehicle	1. Park/neutral position (PNP) switch	AT-106
			2. Overdrive control switch	AT-239
			3. Control cable adjustment	AT-258
			4. Shift solenoid valve A	AT-168
			5. Vehicle speed sensor·A/T (Revolution sensor) and vehicle speed sensor·MTR	AT-118, AT-195
			6. A/T fluid temperature sensor	AT-112
			7. Accelerator pedal position (APP) sensor	AT-178
		OFF vehicle	8. Brake band	AT-268
	A/T does not shift to D_4 when driving with overdrive control switch ON.	ON vehicle	1. Accelerator pedal position (APP) sensor	AT-178
			2. Park/neutral position (PNP) switch	AT-106
			3. Overdrive control switch	AT-239
			4. Vehicle speed sensor·A/T (Revolution sensor) and vehicle speed sensor·MTR	AT-118, AT-195
			5. Shift solenoid valve A	AT-168
			6. Overrun clutch solenoid valve	AT-184
			7. Control valve assembly	AT-253
			8. A/T fluid temperature sensor	AT-112
			9. Line pressure solenoid valve	AT-162
		OFF vehicle	10. Brake band	AT-268
			11. Overrun clutch	AT-313

Items	Symptom	Condition	Diagnostic Item	Reference Page
Slips/Will Not Engage	Vehicle will not run in R position (but runs in D and L positions). Clutch slips. Very poor acceleration.	ON vehicle	1. Control cable adjustment	AT-258
			2. Stall test	AT-68
			3. Line pressure test	AT-71
			4. Line pressure solenoid valve	AT-162
			5. Control valve assembly	AT-253
		OFF vehicle	6. Reverse clutch	AT-305
			7. Low & reverse brake	AT-319
	Vehicle will not run in D and L positions (but runs in R position).	ON vehicle	1. Control cable adjustment	AT-258
		OFF vehicle	2. Low one-way clutch	AT-268
	Vehicle will not run in D and L positions (but runs in R position). Clutch slips. Very poor acceleration.	ON vehicle	1. Fluid level	AT-65
			2. Stall test	AT-68
			3. Line pressure test	AT-71
			4. Line pressure solenoid valve	AT-162
			5. Control valve assembly	AT-253
			6. Accumulator N-D	AT-268
		OFF vehicle	7. Reverse clutch	AT-305
			8. High clutch	AT-308
			9. Forward clutch	AT-313
			10. Forward one-way clutch	AT-268
			11. Low one-way clutch	AT-268
	Clutches or brakes slip somewhat in starting.	ON vehicle	1. Fluid level	AT-65
			2. Control cable adjustment	AT-258
			3. Accelerator pedal position (APP) sensor	AT-178
			4. Line pressure test	AT-71
			5. Line pressure solenoid valve	AT-162
			6. Control valve assembly	AT-253
			7. Accumulator N-D	AT-268
			8. Shift solenoid valve A	AT-168
			9. Shift solenoid valve B	AT-173
			10. Overrun clutch solenoid valve	AT-184
			11. Torque converter clutch solenoid valve	AT-149
		OFF vehicle	12. Forward clutch	AT-313
			13. Reverse clutch	AT-305
			14. Low & reverse brake	AT-319
			15. Oil pump	AT-286
			16. Torque converter	AT-268

Items	Symptom	Condition	Diagnostic Item	Reference Page
Slips/Will Not Engage	No creep at all. AT-218, AT-220	ON vehicle	1. Fluid level	AT-65
			2. Line pressure test	AT-71
			3. Control valve assembly	AT-253
		OFF vehicle	4. Forward clutch	AT-313
			5. Oil pump	AT-286
			6. Torque converter	AT-268
	Almost no shock or clutches slipping in change from D_1 to D_2 .	ON vehicle	1. Fluid level	AT-65
			2. Accelerator pedal position (APP) sensor	AT-178
			3. Line pressure test	AT-71
			4. Accumulator servo release	AT-261
			5. Control valve assembly	AT-253
		OFF vehicle	6. Brake band	AT-268
	Almost no shock or slipping in change from D_2 to D_3 .	ON vehicle	1. Fluid level	AT-65
			2. Accelerator pedal position (APP) sensor	AT-178
			3. Line pressure test	AT-71
			4. Control valve assembly	AT-253
		OFF vehicle	5. High clutch	AT-308
			6. Forward clutch	AT-313
	Almost no shock or slipping in change from D_3 to D_4 .	ON vehicle	1. Fluid level	AT-65
			2. Accelerator pedal position (APP) sensor	AT-178
			3. Line pressure test	AT-71
			4. Control valve assembly	AT-253
		OFF vehicle	5. Brake band	AT-268
	Races extremely fast or slips in changing from D_4 to D_3 when depressing pedal.	ON vehicle	1. Fluid level	AT-65
			2. Accelerator pedal position (APP) sensor	AT-178
			3. Line pressure test	AT-71
			4. Line pressure solenoid valve	AT-162
			5. Shift solenoid valve A	AT-168
			6. Control valve assembly	AT-253
		OFF vehicle	7. Brake band	AT-268
			8. Forward clutch	AT-313
	Races extremely fast or slips in changing from D_4 to D_2 when depressing pedal.	ON vehicle	1. Fluid level	AT-65
			2. Accelerator pedal position (APP) sensor	AT-178
			3. Line pressure test	AT-71
			4. Line pressure solenoid valve	AT-162
			5. Shift solenoid valve A	AT-168
			6. Shift solenoid valve B	AT-173
			7. Control valve assembly	AT-253
		OFF vehicle	8. Brake band	AT-268
			9. Forward clutch	AT-313

Items	Symptom	Condition	Diagnostic Item	Reference Page
Slips/Will Not Engage	Races extremely fast or slips in changing from D3 to D2 when depressing pedal.	ON vehicle	1. Fluid level	AT-65
			2. Accelerator pedal position (APP) sensor	AT-178
			3. Line pressure test	AT-71
			4. Line pressure solenoid valve	AT-162
			5. Shift solenoid valve B	AT-173
			6. Control valve assembly	AT-253
		OFF vehicle	7. Brake band	AT-268
			8. High clutch	AT-308
	Races extremely fast or slips in changing from D4 or D3 to D1 when depressing pedal.	ON vehicle	1. Fluid level	AT-65
			2. Accelerator pedal position (APP) sensor	AT-178
			3. Line pressure test	AT-71
			4. Line pressure solenoid valve	AT-162
			5. Shift solenoid valve A	AT-168
			6. Shift solenoid valve B	AT-173
			7. Control valve assembly	AT-253
		OFF vehicle	8. Forward clutch	AT-313
			9. Forward one-way clutch	AT-268
			10. Low one-way clutch	AT-268
	Vehicle will not run in any position.	ON vehicle	1. Fluid level	AT-65
			2. Control cable adjustment	AT-258
			3. Line pressure test	AT-71
			4. Line pressure solenoid valve	AT-162
		OFF vehicle	5. Oil pump	AT-286
			6. High clutch	AT-308
			7. Brake band	AT-268
			8. Low & reverse brake	AT-319
			9. Torque converter	AT-268
			10. Parking components	AT-283

Items	Symptom	Condition	Diagnostic Item	Reference Page
Others	Engine cannot be started in P and N positions. AT-214	ON vehicle	1. Ignition switch and starter	SC-13
			2. Control cable adjustment	AT-258
			3. Park/neutral position (PNP) switch adjustment	AT-255
	Engine starts in positions other than P and N.	ON vehicle	1. Control cable adjustment	AT-258
			2. Park/neutral position (PNP) switch adjustment	AT-255
	Transaxle noise in P and N positions.	ON vehicle	1. Fluid level	AT-65
			2. Line pressure test	AT-71
			3. Accelerator pedal position (APP) sensor	AT-178
			4. Vehicle speed sensor·A/T (Revolution sensor) and vehicle speed sensor·MTR	AT-118, AT-195
		OFF vehicle	5. Oil pump	AT-286
			6. Torque converter	AT-268
	Vehicle moves when changing into P position or parking gear does not disengage when shifted out of P position.	ON vehicle	1. Control cable adjustment	AT-258
		OFF vehicle	2. Parking components	AT-283
	Vehicle runs in N position. AT-215	ON vehicle	1. Control cable adjustment	AT-258
		OFF vehicle	2. Forward clutch	AT-313
			3. Reverse clutch	AT-305
			4. Overrun clutch	AT-313
	Vehicle braked when shifting into R position.	ON vehicle	1. Fluid level	AT-65
			2. Line pressure test	AT-71
			3. Line pressure solenoid valve	AT-162
			4. Control valve assembly	AT-253
		OFF vehicle	5. High clutch	AT-308
			6. Brake band	AT-268
			7. Forward clutch	AT-313
			8. Overrun clutch	AT-313
	Excessive creep.	ON vehicle	1. Engine idling rpm	EC-37

Items	Symptom	Condition	Diagnostic Item	Reference Page
Others	Engine stops when shifting lever into R, D and L.	ON vehicle	1. Engine idling rpm	EC-37
			2. Fluid level	AT-65
			3. Torque converter clutch solenoid valve	AT-149
			4. Control valve assembly	AT-253
		OFF vehicle	5. Torque converter	AT-268
	Vehicle braked by gear change from D_1 to D_2.	ON vehicle	1. Fluid level	AT-65
		OFF vehicle	2. Reverse clutch	AT-305
			3. Low & reverse brake	AT-319
			4. High clutch	AT-308
			5. Low one-way clutch	AT-268
	Vehicle braked by gear change from D_2 to D_3.	ON vehicle	1. Fluid level	AT-65
		OFF vehicle	2. Brake band	AT-268
	Vehicle braked by gear change from D_3 to D_4.	ON vehicle	1. Fluid level	AT-65
		OFF vehicle	2. Overrun clutch	AT-313
			3. Forward one-way clutch	AT-268
			4. Reverse clutch	AT-305
	Maximum speed not attained. Acceleration poor.	ON vehicle	1. Fluid level	AT-65
			2. Park/neutral position (PNP) switch	AT-106
			3. Overdrive control switch	AT-239
			4. Accelerator pedal position (APP) sensor	AT-178
			5. Vehicle speed sensor·A/T (Revolution sensor) and vehicle speed sensor·MTR	AT-118, AT-195
			6. Shift solenoid valve A	AT-168
			7. Shift solenoid valve B	AT-173
			8. Control valve assembly	AT-253
		OFF vehicle	9. Reverse clutch	AT-305
			10. High clutch	AT-308
			11. Brake band	AT-268
			12. Low & reverse brake	AT-319
			13. Oil pump	AT-286
			14. Torque converter	AT-268
	Transaxle noise in D, L and R positions.	ON vehicle	1. Fluid level	AT-65
		OFF vehicle	2. Torque converter	AT-268

Items	Symptom	Condition	Diagnostic Item	Reference Page
Others	Transaxle overheats.	ON vehicle	1. Fluid level	AT-65
			2. Engine idling rpm	EC-37
			3. Accelerator pedal position (APP) sensor	AT-178
			4. Line pressure test	AT-71
			5. Line pressure solenoid valve	AT-162
			6. Control valve assembly	AT-253
		OFF vehicle	7. Oil pump	AT-286
			8. Reverse clutch	AT-305
			9. High clutch	AT-308
			10. Brake band	AT-268
			11. Forward clutch	AT-313
			12. Overrun clutch	AT-313
			13. Low & reverse brake	AT-319
			14. Torque converter	AT-268
	ATF shoots out during operation. White smoke emitted from exhaust pipe during operation.	ON vehicle	1. Fluid level	AT-65
		OFF vehicle	2. Reverse clutch	AT-305
			3. High clutch	AT-308
			4. Brake band	AT-268
			5. Forward clutch	AT-313
			6. Overrun clutch	AT-313
			7. Low & reverse brake	AT-319
	Offensive smell at fluid charging pipe.	ON vehicle	1. Fluid level	AT-65
		OFF vehicle	2. Torque converter	AT-268
			3. Oil pump	AT-286
			4. Reverse clutch	AT-305
			5. High clutch	AT-308
			6. Brake band	AT-268
			7. Forward clutch	AT-313
			8. Overrun clutch	AT-313
			9. Low & reverse brake	AT-319

TCM Terminals and Reference Value

UCS000N2

PREPARATION

- Measure voltage between each terminal and terminal 25 or 48 by following “TCM INSPECTION TABLE”.

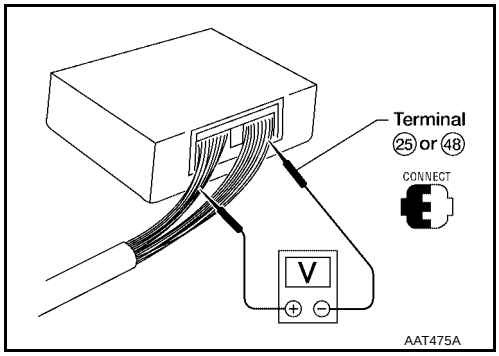

TCM HARNESS CONNECTOR TERMINAL LAYOUT

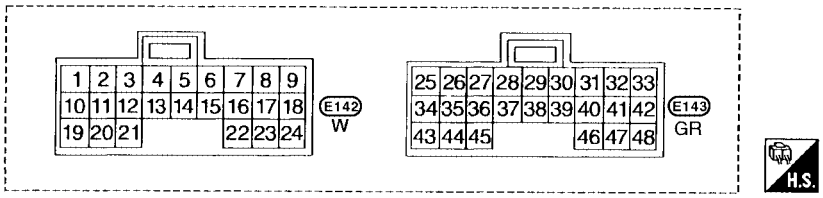

SCIA3369E

TCM INSPECTION TABLE

Data are reference value and are measured between each terminal and ground.

Terminal	Wire color	Item	Condition		Judgement standard (Approx.)
1	G/R	Line pressure solenoid valve		When releasing accelerator pedal after warming up engine.	1.5 - 3.0V
				When depressing accelerator pedal fully after warming up engine.	0V
2	W/B	Line pressure solenoid valve (with dropping resistor)		When releasing accelerator pedal after warming up engine.	4 - 14V
				When depressing accelerator pedal fully after warming up engine.	0V
3	G/B	Torque converter clutch solenoid valve		When A/T performs lock-up.	8 - 15V
				When A/T does not perform lock-up.	0V
5	L	CAN-H	—	—	—
6	Y	CAN-L	—	—	—
10	R/Y	Power source	 or 	With ignition switch ON.	Battery voltage
				With ignition switch OFF.	0V
11	R/Y	Shift solenoid valve A		When shift solenoid valve A operates. (When driving in D_1 or D_4 .)	Battery voltage
				When shift solenoid valve A does not operate. (When driving in D_2 or D_3 .)	0V
12	LG/B	Shift solenoid valve B		When shift solenoid valve B operates. (When driving in D_1 or D_2 .)	Battery voltage
				When shift solenoid valve B does not operate. (When driving in D_3 or D_4 .)	0V
19	R/Y	Power source	Same as No. 10		
20	BR/Y	Overrun clutch solenoid valve		When overrun clutch solenoid valve operates.	Battery voltage
				When overrun clutch solenoid valve does not operate.	0V
25	B	Ground	Always		0V

Terminal	Wire color	Item	Condition		Judgement standard (Approx.)
27	P/B	PNP switch L position		When setting selector lever to L position.	Battery voltage
				When setting selector lever to other positions.	0V
28	Y/R	Power source (Memory back-up)	Always		Battery voltage
29	W	Revolution sensor		When moving at 20 km/h (12 MPH), use the CONSULT-II pulse frequency measuring function.*1 **CAUTION:** **Connect the diagnosis data link cable to the vehicle diagnosis connector.** *1: A circuit tester cannot be used to test this item.	450 Hz
				When vehicle is parked.	0V
30*	BR/Y	Data link connector (RX)		—	—
31*	P	Data link connector (TX)		—	—
32	G/O	Sensor power		Ignition switch ON.	4.5 - 5.5V
				Ignition switch OFF.	0V
34	G	PNP switch D position		When setting selector lever to D position.	Battery voltage
				When setting selector lever to other positions.	0V
35	G/W	PNP switch R position		When setting selector lever to R position.	Battery voltage
				When setting selector lever to other positions.	0V
36	R/G	PNP switch P or N position		When setting selector lever to P or N position.	Battery voltage
				When setting selector lever to other positions.	0V
38	G	Turbine revolution sensor (power train revolution sensor)		When moving at 20 km/h (12 MPH), use the CONSULT-II pulse frequency measuring function.*1 **CAUTION:** **Connect the diagnosis data link cable to the vehicle diagnosis connector.** *1: A circuit tester cannot be used to test this item.	240 Hz
				When vehicle is parked.	Under 1.3V or over 4.5V
39	W/G	Engine speed signal	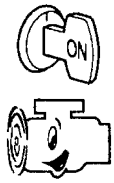	Refer to EC-105, "ECM INSPECTION TABLE" (ECM terminal 103).	

Terminal	Wire color	Item	Condition		Judgement standard (Approx.)
40	V/R	Vehicle speed signal		When moving vehicle at 2 to 3 km/h (1 to 2 MPH) for 1 m (3 ft) or more.	Intermittently changes between approx. 0V and approx. 4.5V
41	W	Accelerator pedal position (APP) sensor		When depressing accelerator pedal slowly after warming up engine. (Voltage rises gradually in response to throttle position.)	Fully-closed throttle: 0.5V Fully-open throttle: 4V
42	B	Sensor ground	Always		0V
47	G	A/T fluid temperature sensor		When ATF temperature is 20°C (68°F).	1.5V
				When ATF temperature is 80°C (176°F).	0.5V
48	B	Ground	Always		0V

*: These terminals are connected to the Data link connector.

TROUBLE DIAGNOSIS FOR POWER SUPPLY

PFP:00000

Wiring Diagram — AT — MAIN

UCS000N4

AT-MAIN-01

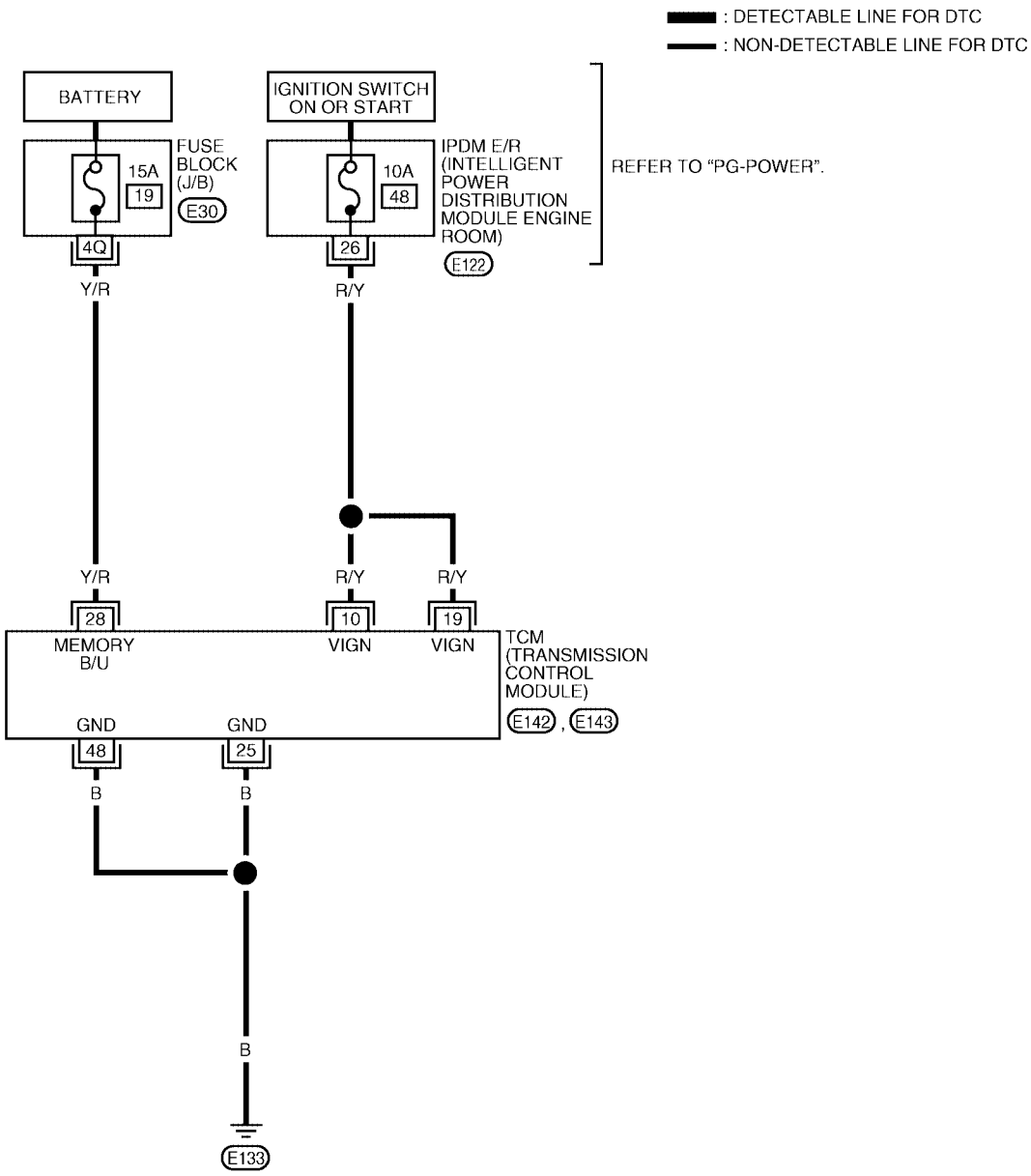

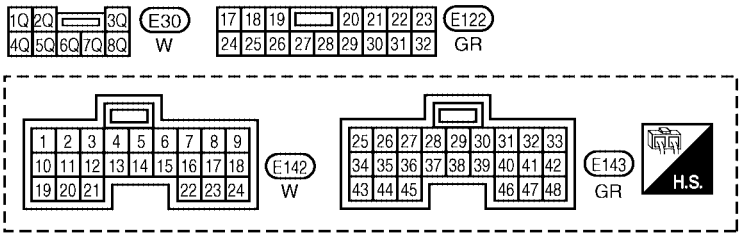

BCWA0169E

TCM TERMINALS AND REFERENCE VALUE (MEASURED BETWEEN EACH TERMINAL AND GROUND)

TERMINAL	WIRE COLOR	ITEM	CONDITION	DATA (APPROX.)
10	R/Y	POWER SOURCE	IGNITION ON	BATTERY VOLTAGE
			IGNITION OFF	0V
19	R/Y	POWER SOURCE	IGNITION ON	BATTERY VOLTAGE
			IGNITION OFF	0V
25	B	GROUND	Always	0V
28	Y/R	POWER SOURCE (MEMORY BACKUP)	Always	BATTERY VOLTAGE
48	B	GROUND	Always	0V

Diagnostic Procedure

UCS000N5

1. CHECK TCM POWER SOURCE STEP 1

1. Turn ignition switch to ON position. (Do not start engine.)
2. Check voltage between TCM harness connectors E142, E143 terminals 10 (R/Y), 19 (R/Y), 28 (Y/R) and ground.

Voltage : Battery voltage

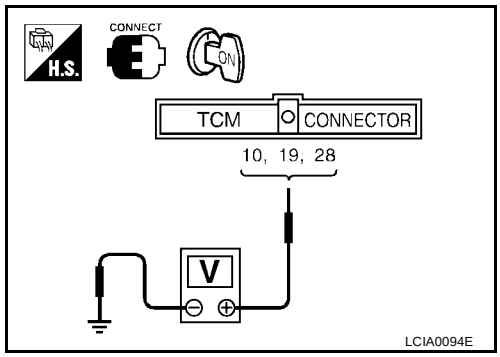

OK or NG

OK >> GO TO 2.
NG >> GO TO 3.

2. CHECK TCM POWER SOURCE STEP 2

1. Turn ignition switch to OFF position.
2. Check voltage between TCM harness connector E143 terminal 28 (Y/R) and ground.

Voltage : Battery voltage

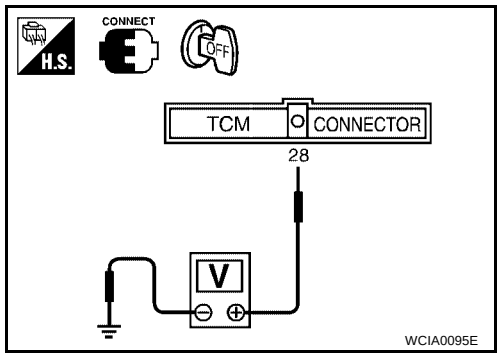

OK or NG

OK >> GO TO 4.
NG >> GO TO 3.

3. DETECT MALFUNCTIONING ITEM

Check the following items:

- Fuse
- Harness for short or open between battery, ignition switch and TCM harness connectors E142, E143 terminals 10 (R/Y), 19 (R/Y) and 28 (Y/R)
- Ignition switch
  Refer toPG-4, "POWER SUPPLY ROUTING CIRCUIT" .

OK or NG

OK >> GO TO 4.
NG >> Repair or replace damaged parts.

4. CHECK TCM GROUND CIRCUIT

1. Turn ignition switch to OFF position.
2. Disconnect TCM harness connector.
3. Check continuity between TCM harness connector E143 terminals 25 (B), 48 (B) and ground. Refer to AT-100, "Wiring Diagram — AT — MAIN" .

   Continuity should exist.

   If OK, check harness for short to ground and short to power.

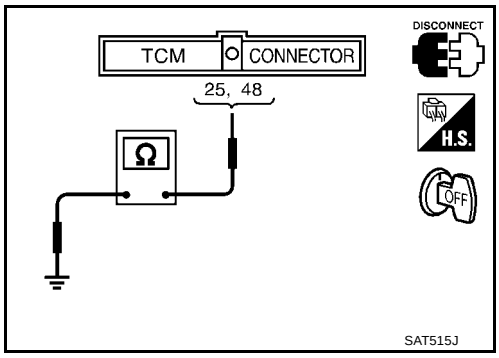

OK or NG

OK >> **INSPECTION END**
NG >> Repair open circuit or short to ground or short to power in harness or connectors.

DTC U1000 CAN COMMUNICATION LINE

PFP:23710

Description

UCS000PO

CAN (Controller Area Network) is a serial communication line for real time application. It is an on-vehicle multiplex communication line with high data communication speed and excellent malfunction detection ability. Many electronic control units are equipped onto a vehicle, and each control unit shares information and links with other control units during operation (not independent). In CAN communication, control units are connected with 2 communication lines (CAN H line, CAN L line) allowing a high rate of information transmission with less wiring. Each control unit transmits/receives data but selectively reads required data only.

On Board Diagnosis Logic

UCS000PP

- This is an OBD-II self-diagnostic item.
- Diagnostic trouble code “CAN COMM CIRCUIT” with CONSULT-II or U1000 without CONSULT-II is detected when TCM cannot communicate to other control units.

Possible Cause

UCS000PQ

Harness or connectors
(CAN communication line is open or shorted.)

DTC Confirmation Procedure

UCS000PR

NOTE:
If “DTC Confirmation Procedure” has been previously conducted, always turn ignition switch “OFF” and wait at least 10 seconds before conducting the next test.
After the repair, perform the following procedure to confirm the malfunction is eliminated.

WITH CONSULT-II

1. Turn ignition switch to “ON” position. (Do not start engine.)
2. Select “DATA MONITOR” mode for “A/T” with CONSULT-II.
3. Wait at least 6 seconds or start engine and wait for at least 6 seconds.

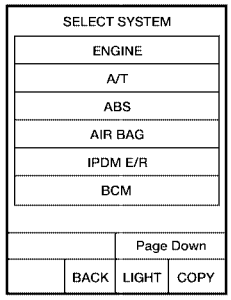

NOTE: EXAMPLE SHOWN. ACTUAL DISPLAY MAY DIFFER
BCIA0030E

WITH GST

Follow the procedure “WITH CONSULT-II”.

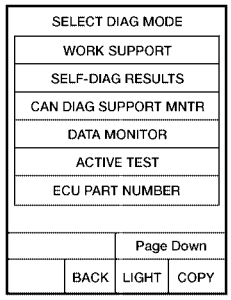

NOTE: EXAMPLE SHOWN. ACTUAL DISPLAY MAY DIFFER
BCIA0031E

Wiring Diagram — AT — CAN

UCS000PS

AT-CAN-01

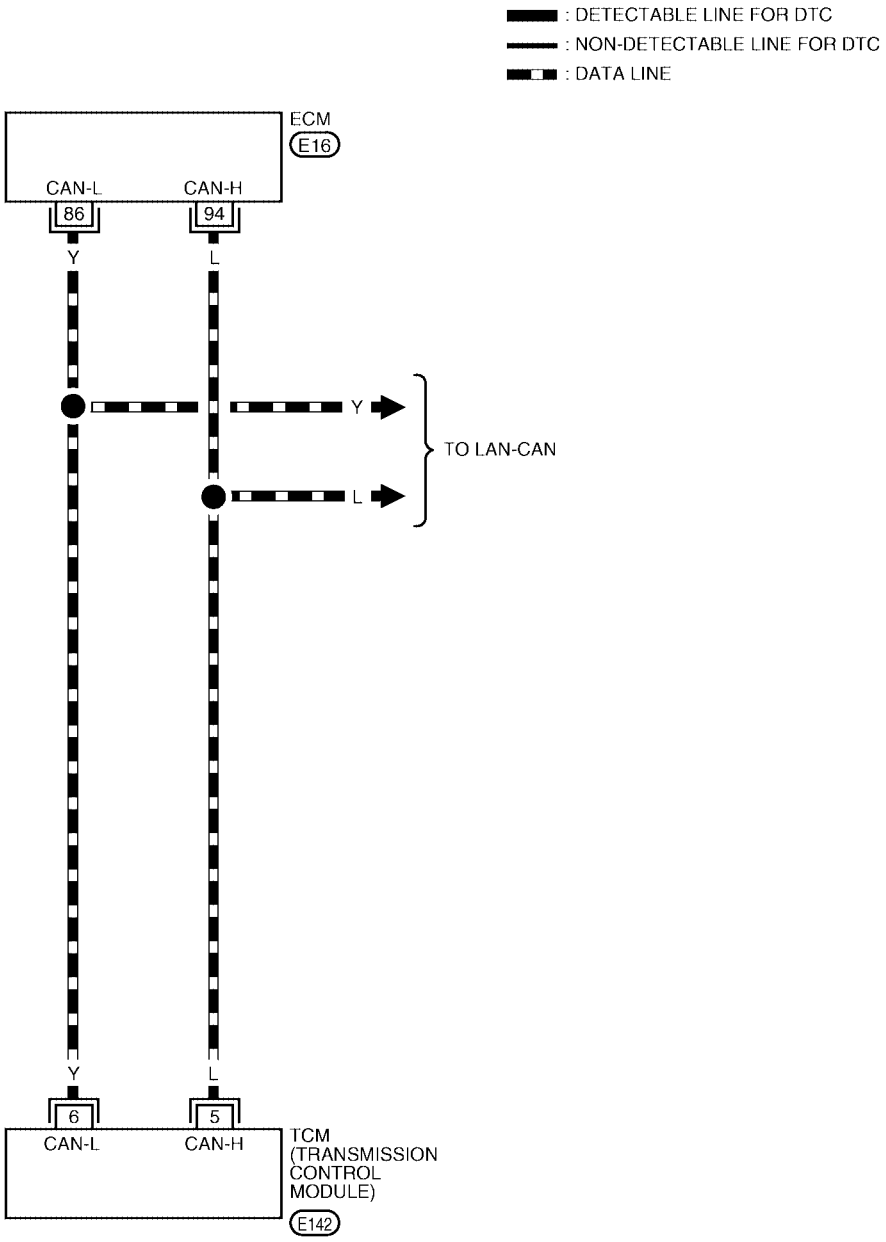

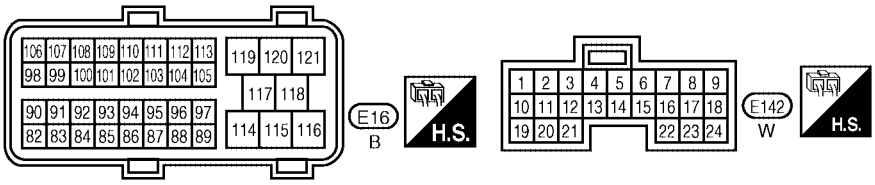

BCWA0170E

Diagnostic Procedure

UCS000PT

1. CHECK CAN COMMUNICATION CIRCUIT

With CONSULT-II

1. Turn ignition switch to “ON” position. (Do not start engine.)
2. Select “SELF-DIAG RESULTS” mode for “A/T” with CONSULT-II.
3. The “CAN COMM CIRCUIT” is detected.

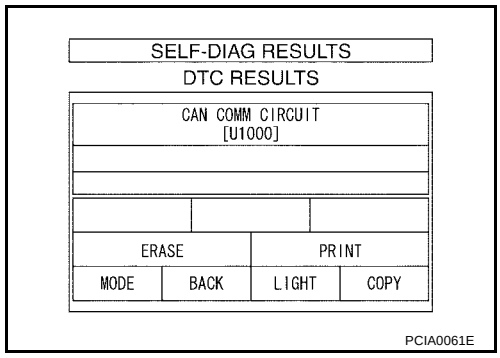

Yes or No

Yes >> Print out CONSULT-II screen, GO TO LAN-4, "Precautions When Using CONSULT-II" .

No >> **INSPECTION END**

DTC P0705 PARK/NEUTRAL POSITION SWITCH

PFP:32006

Description

UCS000N6

- The park/neutral position (PNP) switch includes a transmission range switch.
- The transmission range switch detects the selector lever position and sends a signal to the TCM.

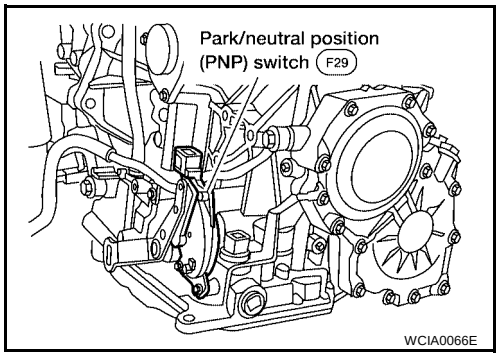

On Board Diagnosis Logic

UCS000N7

Diagnostic trouble code “PNP SW/CIRC” with CONSULT-II or P0705 without CONSULT-II is detected when TCM does not receive the correct voltage signal from the switch based on the gear position.

Possible Cause

UCS000N8

Check the following items.

- Harness or connectors
  (The park/neutral position (PNP) switch circuit is open or shorted.)
- Park/neutral position (PNP) switch

Diagnostic Trouble Code (DTC) Confirmation Procedure

UCS000N9

CAUTION:
Always drive vehicle at a safe speed.

NOTE:
If “DTC Confirmation Procedure” has been previously conducted, always turn ignition switch OFF and wait at least 10 seconds before conducting the next test.
After the repair, perform the following procedure to confirm the malfunction is eliminated.

WITH CONSULT-II

1. Turn ignition switch to ON position. (Do not start engine.)

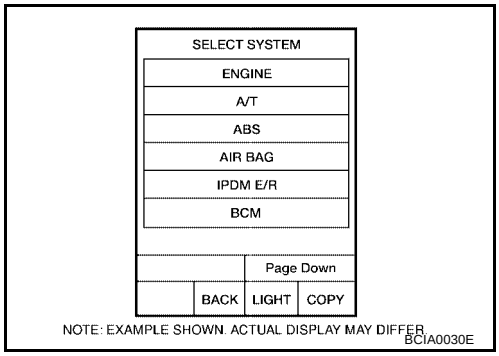

2. Select “DATA MONITOR” mode for “ENGINE” with CONSULT-II.
3. Start engine and maintain the following conditions for at least 5 consecutive seconds.
   VHCL SPEED SE: 10 km/h (6 MPH) or more
   THRTL POS SEN: More than 1.3V
   Selector lever: D position (OD “ON” or “OFF”)

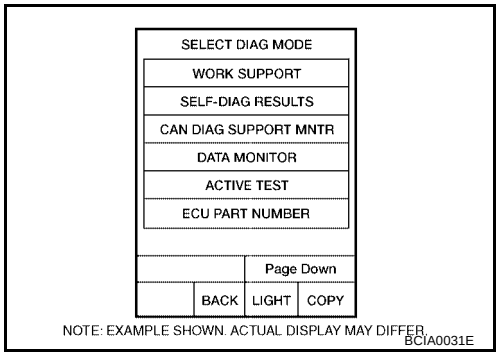

WITH GST

Follow the procedure “With CONSULT-II”.

Wiring Diagram — AT — PNP/SW

UCS000NA

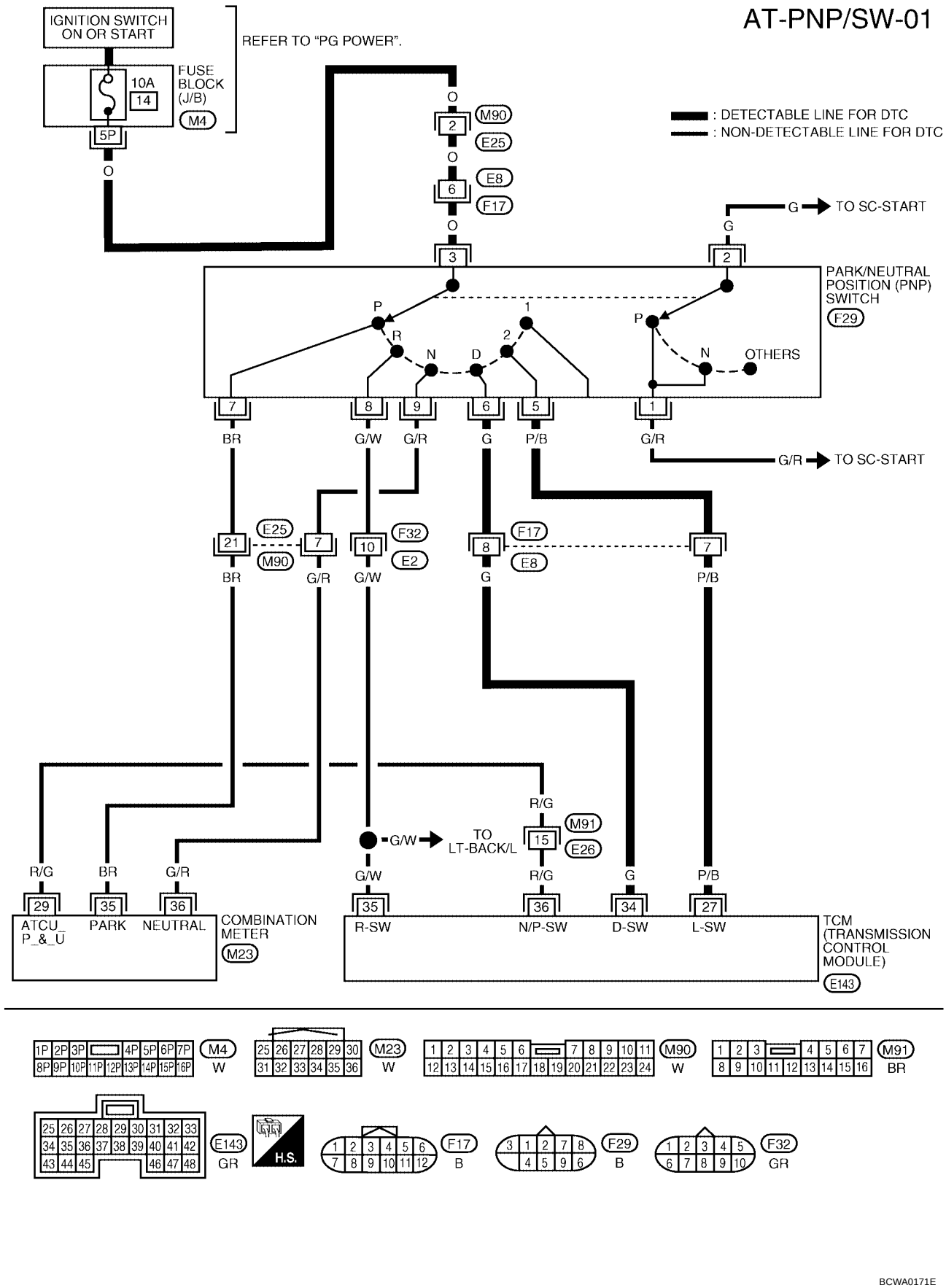

TCM TERMINALS AND REFERENCE VALUE (MEASURED BETWEEN EACH TERMINAL AND GROUND)

TERMINAL	WIRE COLOR	ITEM	CONDITION		DATA (APPROX.)
27	P/B	PNP SWITCH L POSITION	IGNITION ON	WHEN SETTING SELECTOR LEVER IN L POSITION	BATTERY VOLTAGE
				WHEN SETTING SELECTOR LEVER IN OTHER POSITIONS	0V
34	G	PNP SWITCH D POSITION		WHEN SETTING SELECTOR LEVER IN D POSITION	BATTERY VOLTAGE
				WHEN SETTING SELECTOR LEVER IN OTHER POSITIONS	0V
35	G/W	PNP SWITCH R POSITION		WHEN SETTING SELECTOR LEVER IN R POSITION	BATTERY VOLTAGE
				WHEN SETTING SELECTOR LEVER IN OTHER POSITIONS	0V
36	R/G	PNP SWITCH P OR N POSITION		WHEN SETTING SELECTOR LEVER IN P OR N POSITION	BATTERY VOLTAGE
				WHEN SETTING SELECTOR LEVER IN OTHER POSITIONS	0V

Diagnostic Procedure

UCS000NB

1. INSPECTION START

Do you have CONSULT-II?

Yes or No

Yes >> GO TO 2.
No >> GO TO 5.

2. CHECK PARK/NEUTRAL POSITION (PNP) SWITCH CIRCUIT (WITH CONSULT-II)

With CONSULT-II

1. Turn ignition switch to ON position. (Do not start engine.)
2. Select “DATA MONITOR” mode for “A/T” with CONSULT-II.
3. Read out P/N, R, D, 2nd position switches moving selector lever to each position.
   Check that the signal of the selector lever position is indicated properly.
   NOTE:
   “2 POSITION SW” indicates L position status.

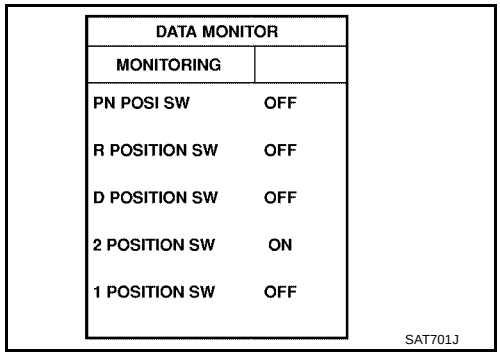

DATA MONITOR	
MONITORING	
PN POSI SW	OFF
R POSITION SW	OFF
D POSITION SW	OFF
2 POSITION SW	ON
1 POSITION SW	OFF

SAT701J

OK or NG

OK >> GO TO 8.
NG >> GO TO 3.

3. CHECK PARK/NEUTRAL POSITION (PNP) SWITCH

Check the following item:

- Park/neutral position (PNP) switch
  Check continuity between PNP switch harness connector F29 terminals 1 and 2 and between terminals 3 and 5, 6, 7, 8 and 9 while moving manual shaft through each position.

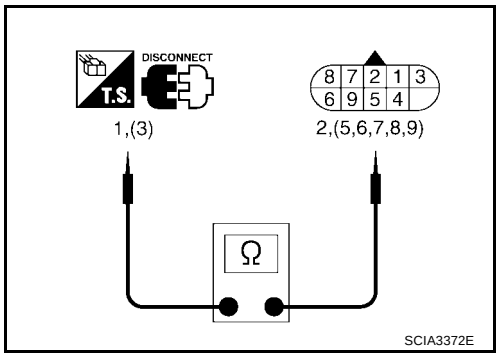

Lever position	Terminal	
P	3 - 7	1 - 2
R	3 - 8	
N	3 - 9	1 - 2
D	3 - 6	
L	3 - 5	

OK or NG

OK >> GO TO 6.
NG >> GO TO 4.

4. CHECK MANUAL CONTROL CABLE ADJUSTMENT

Check PNP switch again with manual control cable disconnected from manual shaft of A/T assembly. Refer to test group 2 (With CONSULT-II) or 7 (With out CONSULT-II).

OK or NG

OK >> Adjust manual control cable. Refer to AT-258, "Control Cable Adjustment" .
NG >> GO TO 5.

5. CHECK PNP SWITCH ADJUSTMENT

Remove PNP switch from A/T assembly and check continuity of PNP switch terminals. Refer to test group 3.

OK or NG

OK >> Adjust PNP switch. Refer to AT-255, "Park/Neutral Position (PNP) Switch Adjustment" .
NG >> Repair or replace PNP switch.

6. DETECT MALFUNCTIONING ITEM

Check the following items:

- Fuse
- Harness for short or open between ignition switch and park/neutral position (PNP) switch
- Harness for short or open between park/neutral position (PNP) switch and TCM
- Harness for short or open between park/neutral position (PNP) switch and combination meter
- Harness for short or open between combination meter and TCM
- Ignition switch
  Refer to PG-4, "POWER SUPPLY ROUTING CIRCUIT" .

OK or NG

OK >> GO TO 8.
NG >> Repair or replace damaged parts.

7. CHECK PARK/NEUTRAL POSITION (PNP) SWITCH CIRCUIT (WITHOUT CONSULT-II)

Without CONSULT-II

1. Turn ignition switch to ON position. (Do not start engine.)
2. Check voltage between TCM harness connector E143 terminals 27 (P/B), 34 (G), 35 (G/W), 36 (R/G) and ground while moving selector lever through each position.

Lever Position	Terminal			
	36	35	34	27
P, N	**B**	0	0	0
R	0	**B**	0	0
D	0	0	**B**	0
L	0	0	0	**B**

B: Battery voltage
0: 0V

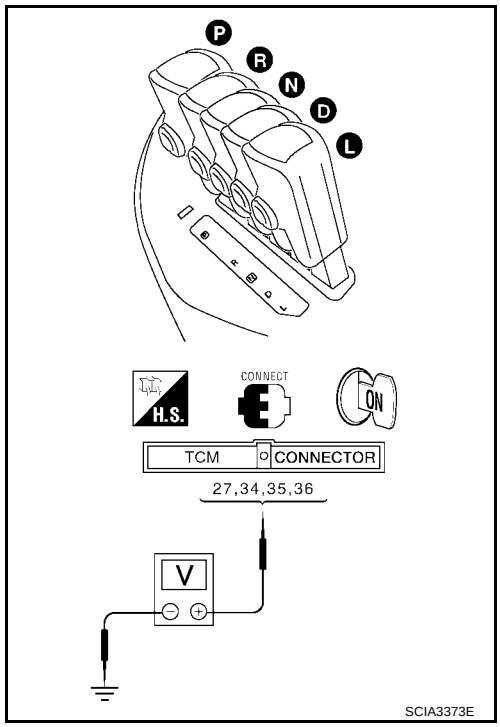

OK or NG

OK >> GO TO 8.
NG >> GO TO 3.

8. CHECK DTC

Perform AT-106, "Diagnostic Trouble Code (DTC) Confirmation Procedure" .

OK or NG

OK >> **INSPECTION END**
NG >> GO TO 9.

9. CHECK TCM INSPECTION

1. Perform TCM input/output signal inspection. Refer to AT-96, "TCM Terminals and Reference Value" .
2. If NG, recheck TCM pin terminals for damage or loose connection with harness connector.

OK or NG

OK >> **INSPECTION END**
NG >> Repair or replace damaged parts.

DTC P0710 A/T FLUID TEMPERATURE SENSOR CIRCUIT

PFP:31940

Description

UCS000NC

The A/T fluid temperature sensor detects the A/T fluid temperature and sends a signal to the TCM.

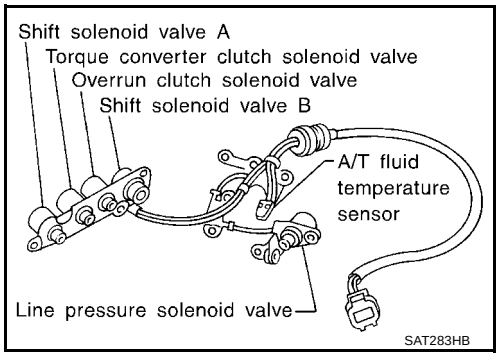

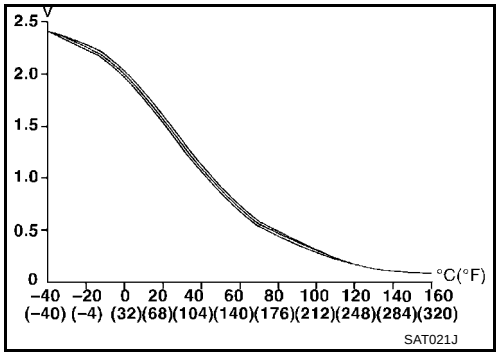

CONSULT-II REFERENCE VALUE IN DATA MONITOR MODE

Remarks: Specification data are reference values.

Monitor item	Condition	Specification (Approximately)
FLUID TEMP SE [V]	Cold [20°C (68°F)] ↓ Hot [80°C (176°F)]	1.5V ↓ 0.5V

On Board Diagnosis Logic

UCS000ND

Diagnostic trouble code “ATF TEMP SEN/CIRC” with CONSULT-II or P0710 without CONSULT-II is detected when TCM receives an excessively low or high voltage from the sensor.

Possible Cause

UCS000NE

Check the following items.

- Harness or connectors
  (The sensor circuit is open or shorted.)
- A/T fluid temperature sensor

Diagnostic Trouble Code (DTC) Confirmation Procedure

UCS000NF

CAUTION:
Always drive vehicle at a safe speed.

NOTE:
If “DTC Confirmation Procedure” has been previously conducted, always turn ignition switch OFF and wait at least 10 seconds before conducting the next test.
After the repair, perform the following procedure to confirm the malfunction is eliminated.

WITH CONSULT-II

1. Turn ignition switch ON and select “DATA MONITOR” mode for “ENGINE” with CONSULT-II.

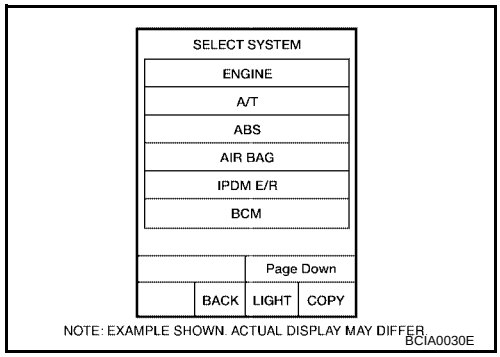

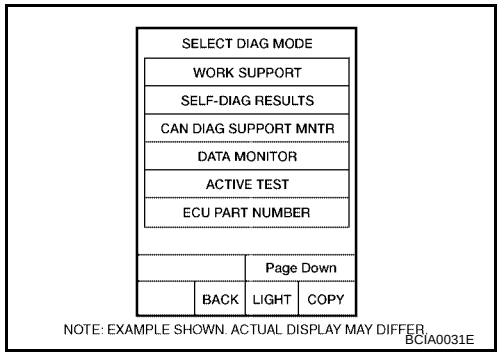

2. Select "ECM INPUT SIGNALS" touch "START".
3. Start engine and maintain the following conditions for at least 10 minutes (Total). (It is not necessary to maintain continuously.)
   ENG SPEED: 450 rpm or more
   VEHICLE SPEED: 10 km/h (6 MPH) or more
   THRTL POSI: More than 1.2V
   Selector lever: D position

WITH GST

Follow the procedure “With CONSULT-II”.

Wiring Diagram — AT — FTS

UCS000NG

AT-FTS-01

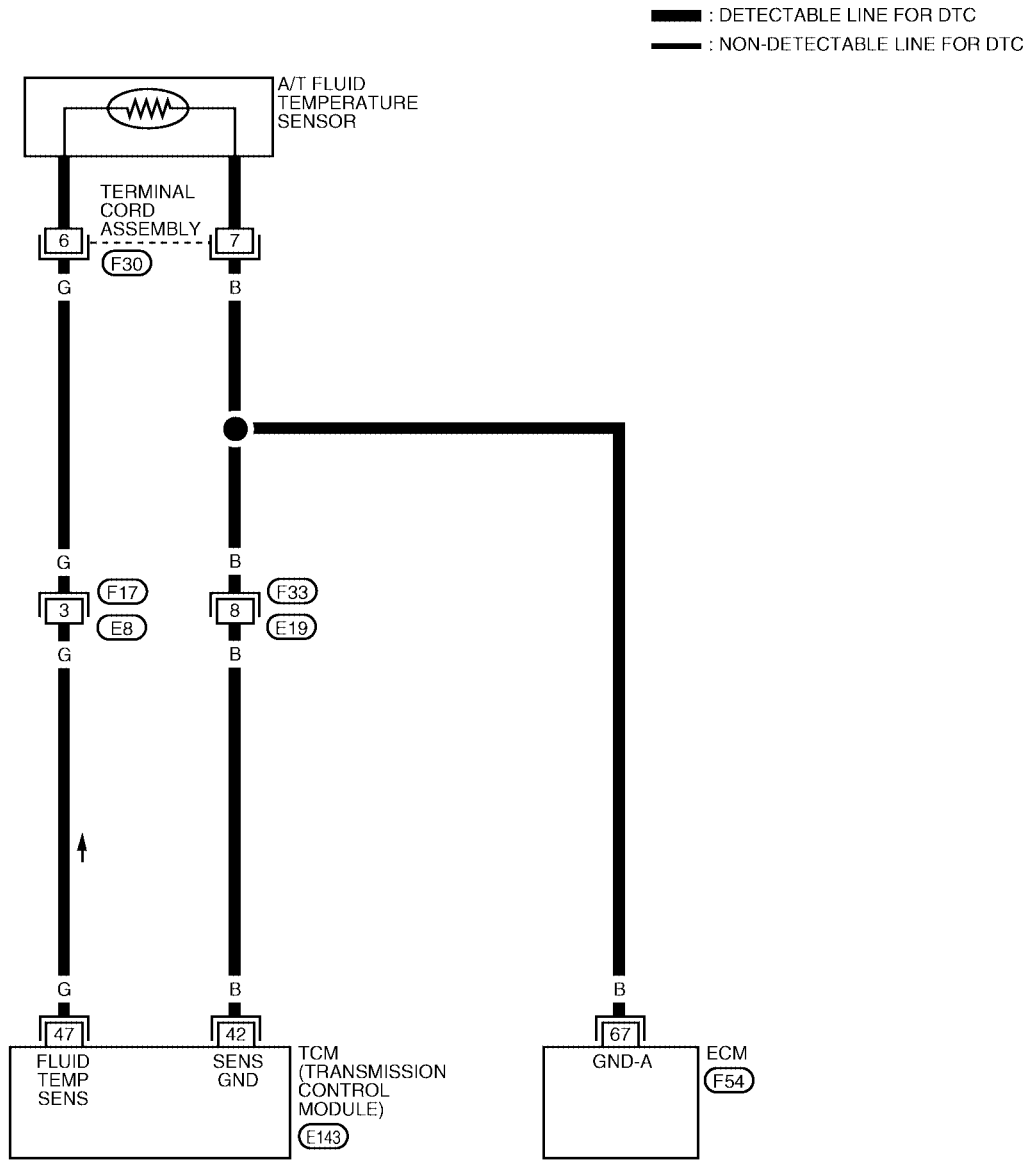

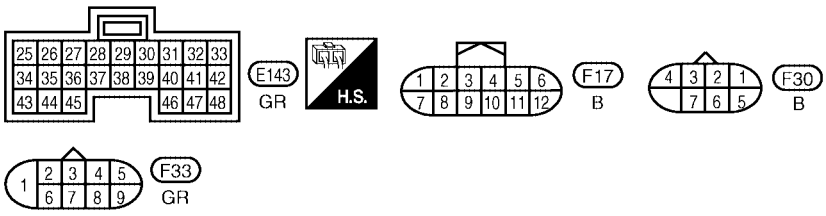

REFER TO THE FOLLOWING.
F54 - ELECTRICAL UNITS

BCWA0172E

TCM TERMINALS AND REFERENCE VALUE (MEASURED BETWEEN EACH TERMINAL AND GROUND)

TERMINAL	WIRE COLOR	ITEM	CONDITION	DATA (APPROX.)
42	B	SENSOR GROUND	Always	0V
47	G	A/T FLUID TEMPERATURE SENSOR	IGNITION ON AND ATF TEMPERATURE IS 20°C (68°F)	1.5V
			IGNITION ON AND ATF TEMPERATURE IS 80°C (176°F)	0.5V

Diagnostic Procedure

UCS000NH

1. INSPECTION START

Do you have CONSULT-II?

Yes or No

Yes >> GO TO 2.
No >> GO TO 6.

2. CHECK INPUT SIGNAL OF A/T FLUID TEMPERATURE SENSOR (WITH CONSULT-II)

With CONSULT-II

1. Start engine.
2. Select “DATA MONITOR” mode for “A/T” with CONSULT-II.
3. Read out the value of “FLUID TEMP SE”.

Voltage :Cold [20°C (68°F)] → Hot [80°C (176°F)]
:Approximately 1.5V → 0.5V

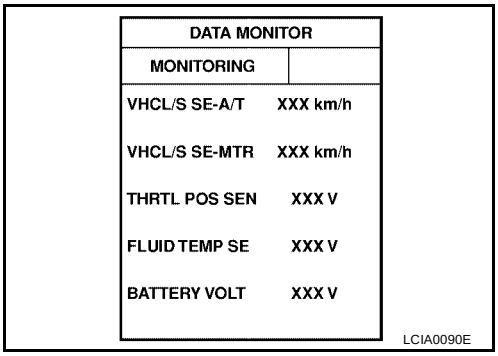

OK or NG

OK >> GO TO 7.
NG >> GO TO 3.

3. CHECK A/T FLUID TEMPERATURE SENSOR WITH TERMINAL CORD ASSEMBLY

1. Turn ignition switch to OFF position.
2. Disconnect terminal cord assembly connector in engine compartment.
3. Check resistance between terminal cord F30 terminals 6 and 7 when A/T is cold.

Temperature	Resistance (Approx.)
Cold [20°C (68°F)]	2.5kΩ

4. Reinstall any part removed.

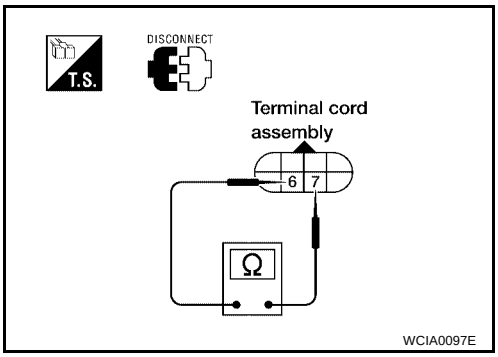

OK or NG

OK >> GO TO 4.
NG >> GO TO 5.

4. DETECT MALFUNCTIONING ITEM

Check the following items:

- Harness for short to ground or short to power or open between TCM, ECM and terminal cord assembly
- Ground circuit for ECM
  Refer to EC-141, "POWER SUPPLY AND GROUND CIRCUIT" .

OK or NG

OK >> GO TO 7.
NG >> Repair or replace damaged parts.

5. DETECT MALFUNCTIONING ITEM

1. Remove oil pan. Refer to AT-253, "Control Valve Assembly and Accumulators" .
2. Check the following items:

– A/T fluid temperature sensor

- Check resistance between two terminals while changing temperature as shown at below.

Temperature °C (°F)	Resistance (Approx.)
20 (68)	2.5kΩ
80 (176)	0.3kΩ

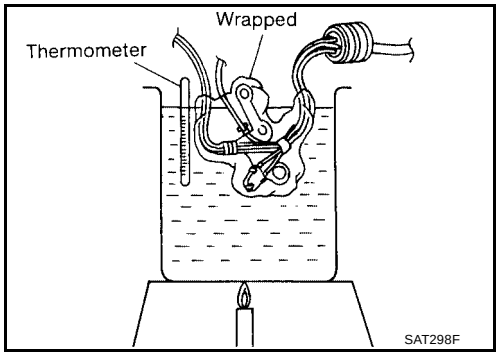

– Harness of terminal cord assembly for short or open

OK or NG

OK >> GO TO 7.
NG >> Repair or replace damaged parts.

6. CHECK INPUT SIGNAL OF A/T FLUID TEMPERATURE SENSOR (WITHOUT CONSULT-II)

Without CONSULT-II

1. Start engine.
2. Check voltage between TCM harness connector E143 terminal 47 (G) and ground while warming up A/T.

Temperature	Voltage (Approx.)
Cold [20°C (68°F)] → Hot [80°C (176°F)]	1.5V → 0.5V

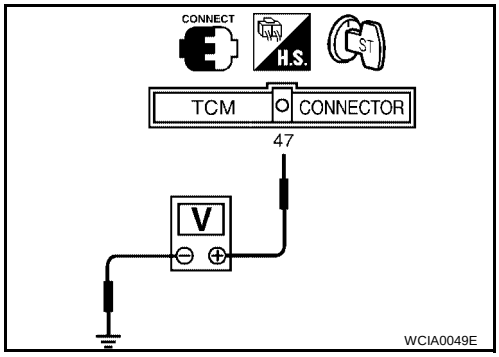

OK or NG

OK >> GO TO 7.
NG >> GO TO 3.

7. CHECK DTC

Perform AT-112, "Diagnostic Trouble Code (DTC) Confirmation Procedure" .

OK or NG

OK >> **INSPECTION END**
NG >> GO TO 8.

8. CHECK TCM INSPECTION

1. Perform TCM input/output signal inspection. Refer to AT-96, "TCM Terminals and Reference Value" .
2. If NG, recheck TCM pin terminals for damage or loose connection with harness connector.

OK or NG

OK >> **INSPECTION END**
NG >> Repair or replace damaged parts.

DTC P0720 VEHICLE SPEED SENSOR·A/T (REVOLUTION SENSOR)

PFP:32702

Description

UCS000NI

The revolution sensor detects the revolution of the idler gear parking pawl lock gear and emits a pulse signal. The pulse signal is sent to the TCM which converts it into vehicle speed.

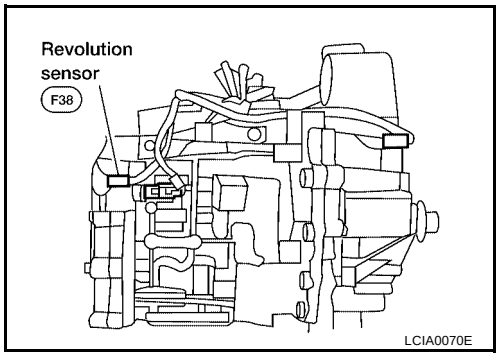

On Board Diagnosis Logic

UCS000NJ

Diagnostic trouble code “VEH SPD SEN/CIR AT” with CONSULT-II or P0720 without CONSULT-II is detected when TCM does not receive the proper voltage signal from the sensor.

Possible Cause

UCS000NK

Check the following items.

- Harness or connectors
  (The sensor circuit is open or shorted.)
- Revolution sensor

Diagnostic Trouble Code (DTC) Confirmation Procedure

UCS000NL

CAUTION:

- **Always drive vehicle at a safe speed.**
- **Be careful not to rev engine into the red zone on the tachometer.**

NOTE:

If “DTC Confirmation Procedure” has been previously conducted, always turn ignition switch OFF and wait at least 10 seconds before conducting the next test.

After the repair, perform the following procedure to confirm the malfunction is eliminated.

WITH CONSULT-II

1. Turn ignition switch ON and select “DATA MONITOR” mode for “A/T” with CONSULT-II.

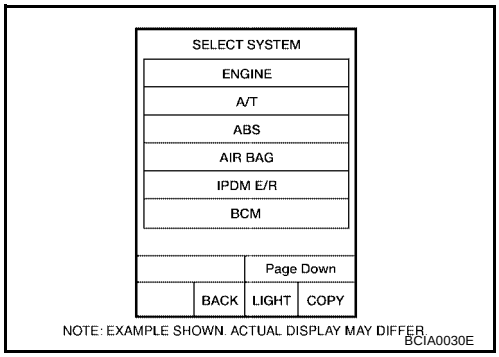

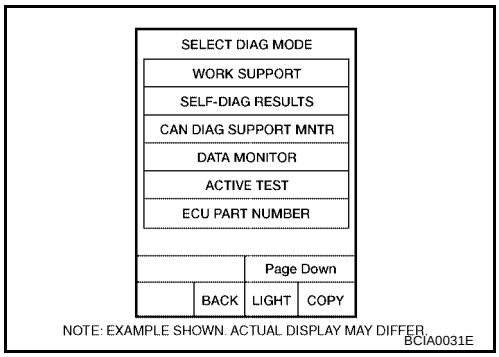

2. Drive vehicle and check for an increase of “VHCL/S SE-MTR” value.
   If the check result is NG, go to AT-121, "Diagnostic Procedure" .
   If the check result is OK, go to following step.
3. Select “DATA MONITOR” mode for “ENGINE” with CONSULT-II.

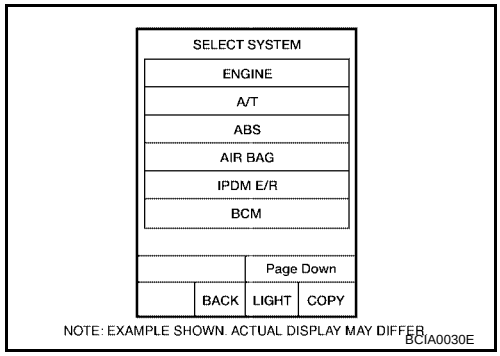

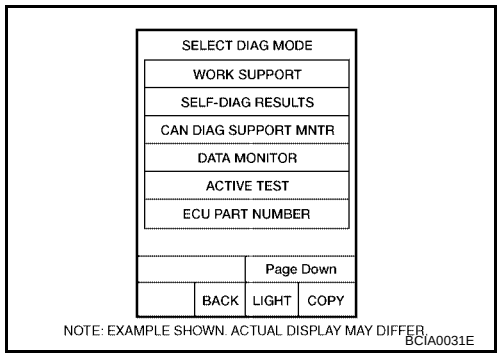

4. Start engine and maintain the following conditions for at least 5 consecutive seconds.
   VHCL SPEED SE: 30 km/h (19 MPH) or more
   THRTL POS SEN: More than 1.2V
   Selector lever: D position
   Driving location: Driving the vehicle uphill (increased engine load) will help maintain the driving conditions required for this test.
   If the check result is NG, go to AT-121, "Diagnostic Procedure" .
   If the check result is OK, go to following step.
5. Maintain the following conditions for at least 5 consecutive seconds.
   CMPS·RPM (REF): 3,500 rpm or more
   THRTL POS SEN: More than 1.2V
   Selector lever: D position
   Driving location: Driving the vehicle uphill (increased engine load) will help maintain the driving conditions required for this test.

WITH GST

Follow the procedure “With CONSULT-II”.

Wiring Diagram — AT — VSSA/T

UCS000NM

AT-VSSA/T-01

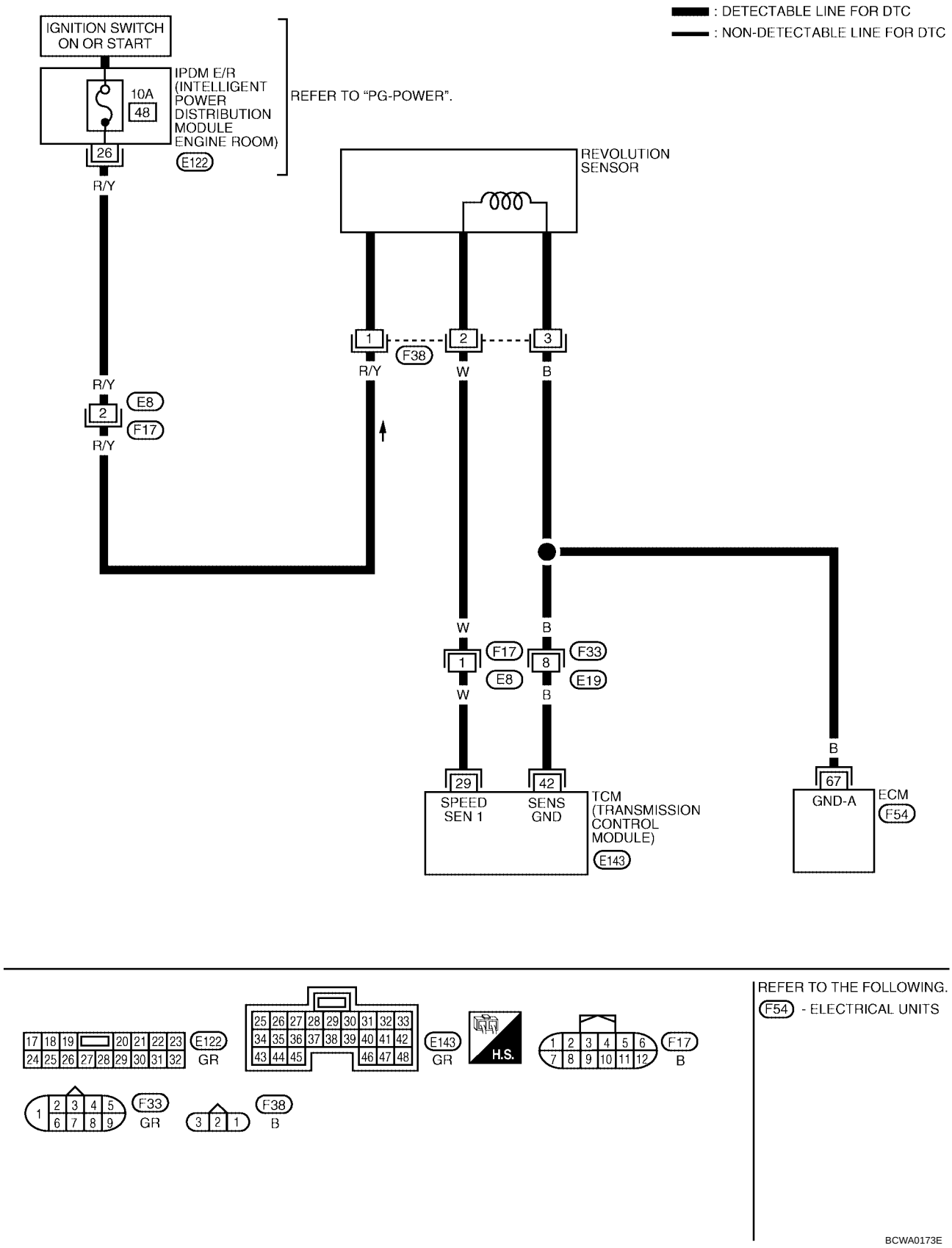

TCM TERMINALS AND REFERENCE VALUE (MEASURED BETWEEN EACH TERMINAL AND GROUND)

TERMINAL	WIRE COLOR	ITEM	CONDITION	DATA (APPROX.)
29	W	REVOLUTION SENSOR	VEHICLE MOVING AT 20 KM/H (12 MPH). USE THE CONSULT-II PULSE FREQUENCY MEASURING FUNCTION. A CIRCUIT TESTER CANNOT BE USED TO TEST THIS ITEM. CAUTION: CONNECT THE DIAGNOSIS DATA LINK CABLE TO THE VEHICLE DIAGNOSIS CONNECTOR.	450 HZ
			VEHICLE NOT MOVING.	0V
42	B	SENSOR GROUND	Always	0V

Diagnostic Procedure

UCS000NN

1. CHECK INPUT SIGNAL (WITH CONSULT-II)

With CONSULT-II

1. Start engine.
2. Select “DATA MONITOR” mode for “A/T” with CONSULT-II.
3. Read out the value of “VHCL/S SE-A/T” while driving.
   Check the value changes according to driving speed.

OK or NG

OK >> GO TO 5.
NG >> GO TO 2.

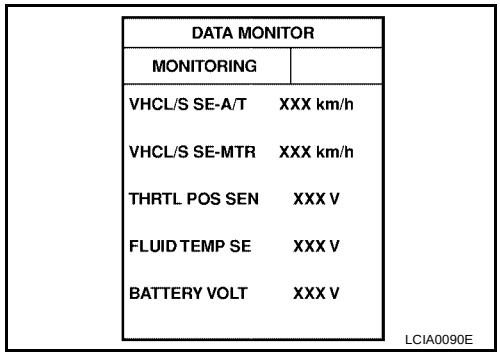

2. CHECK REVOLUTION SENSOR (WITH CONSULT-II)

With CONSULT-II

1. Start engine.
2. Check pulse between TCM harness connector E143 terminal 29 (W) and ground.

Condition	Judgement standard (Approx.)
When moving at 20 km/h (12 MPH), use the CONSULT-II pulse frequency measuring function.*1 **CAUTION:** **Connect the diagnosis data link cable to the vehicle diagnosis connector.** *1: A circuit tester cannot be used to test this item.	450 Hz
When vehicle is parked.	0V

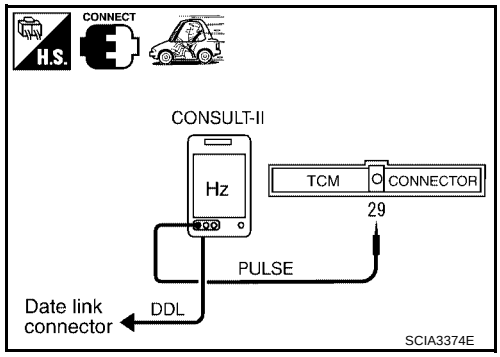

OK or NG

OK >> GO TO 5.
NG >> GO TO 3.

3. CHECK POWER FOR REVOLUTION SENSOR

1. Turn ignition switch to OFF position.
2. Disconnect the revolution sensor harness connector.
3. Turn ignition switch to ON position. (Do not start engine.)
4. Check voltage between revolution sensor harness connector F38 terminal 1 (R/Y) and ground.

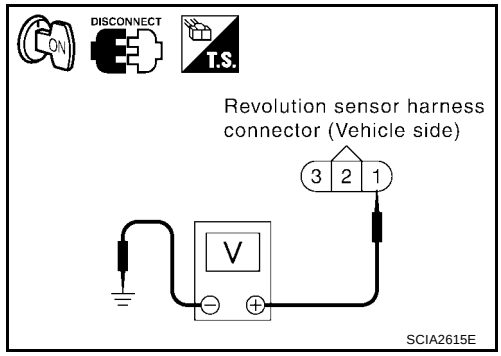

Voltage **: Battery voltage**

OK or NG

OK >> GO TO 4.
NG >> Check the following items. If any items is damaged, repair or replace damaged parts.
- Fuse
- Harness for short or open between ignition switch and revolution sensor
- Ignition switch
  Refer to PG-4, "POWER SUPPLY ROUTING CIRCUIT" .

4. DETECT MALFUNCTIONING ITEM

Check harness for short or open between TCM, ECM and revolution sensor.

OK or NG

OK >> Repair or replace revolution sensor.
NG >> Repair or replace damaged parts.

5. CHECK DTC

Perform AT-118, "Diagnostic Trouble Code (DTC) Confirmation Procedure" .

OK or NG

OK >> **INSPECTION END**
NG >> GO TO 6.

6. CHECK TCM INSPECTION

1. Perform TCM input/output signal inspection. Refer to AT-96, "TCM Terminals and Reference Value" .
2. If NG, recheck TCM pin terminals for damage or loose connection with harness connector.

OK or NG

OK >> **INSPECTION END**
NG >> Repair or replace damaged parts.

DTC P0725 ENGINE SPEED SIGNAL

PFP:24825

Description

UCS000NO

The engine speed signal is sent from the ECM to the TCM.

On Board Diagnosis Logic

UCS000NP

Diagnostic trouble code “ENGINE SPEED SIG” with CONSULT-II or P0725 without CONSULT-II is detected when TCM does not receive the proper voltage signal from ECM.

Possible Cause

UCS000NQ

Check harness or connectors. (The sensor circuit is open or shorted.)

Diagnostic Trouble Code (DTC) Confirmation Procedure

UCS000NR

CAUTION:
Always drive vehicle at a safe speed.

NOTE:
If “DTC Confirmation Procedure” has been previously conducted, always turn ignition switch OFF and wait at least 10 seconds before conducting the next test.
After the repair, perform the following procedure to confirm the malfunction is eliminated.

WITH CONSULT-II

1. Turn ignition switch ON and select “DATA MONITOR” mode for “ENGINE” with CONSULT-II.

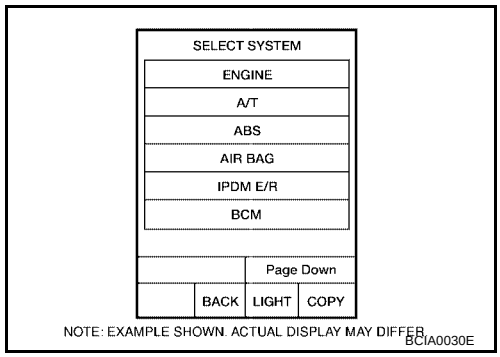

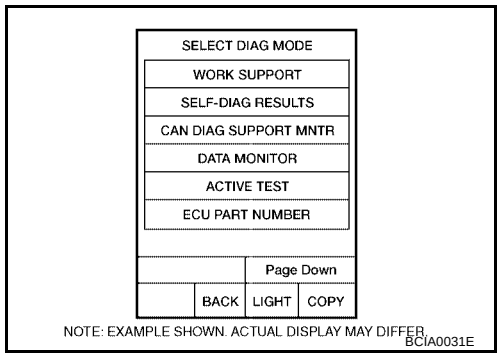

2. Start engine and maintain the following conditions for at least 10 consecutive seconds.
   VHCL SPEED SE: 10 km/h (6 MPH) or more
   THRTL POS SEN: More than 1.2V
   Selector lever: D position

WITH GST

Follow the procedure “With CONSULT-II”.

Wiring Diagram — AT — ENGSS

UCS000NS

AT-ENGSS-01

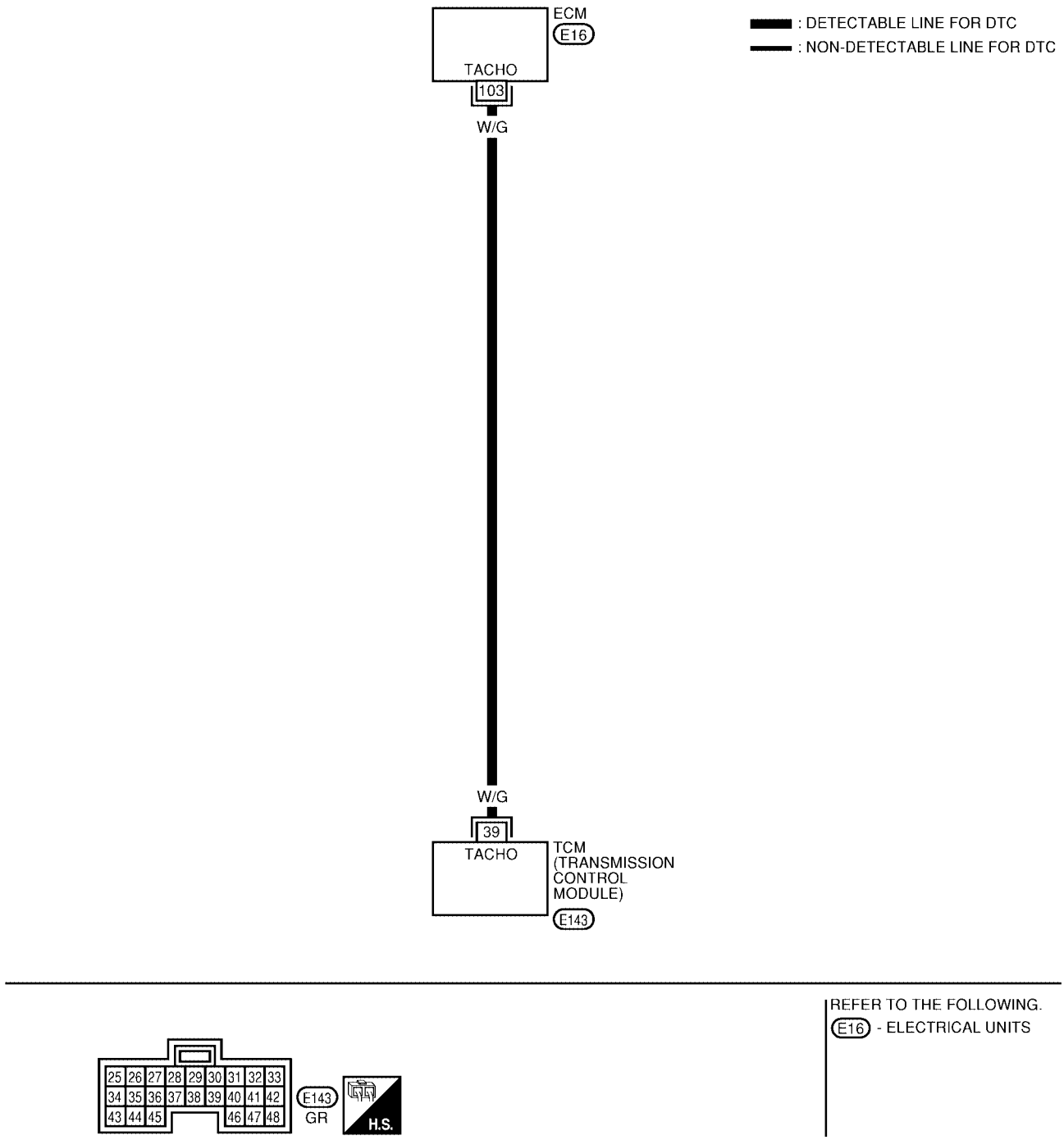

TCM TERMINALS AND REFERENCE VALUE (MEASURED BETWEEN EACH TERMINAL AND GROUND)				
TERMINAL	WIRE COLOR	ITEM	CONDITION	DATA
39	W/G	ENGINE SPEED SIGNAL	Refer to EC-105, "ECM INSPECTION TABLE" (ECM terminal 103).	

Diagnostic Procedure

UCS000NT

1. CHECK DTC WITH ECM

- Check P code with CONSULT-II “ENGINE”.
  Turn ignition switch ON and select “SELF-DIAGNOSTIC RESULTS” mode for “ENGINE” with CONSULT-II.
  Refer to EC-71, "Malfunction Indicator Lamp (MIL)" .

OK or NG

OK (with CONSULT-II)>> GO TO 2.
OK (without CONSULT-II)>> GO TO 4.
NG >> Check ignition signal circuit for engine control. Refer to EC-645, "IGNITION SIGNAL" .

2. CHECK INPUT SIGNAL (WITH CONSULT-II)

With CONSULT-II

1. Start engine.
2. Select “DATA MONITOR” mode for “A/T” with CONSULT-II.
3. Read out the value of “ENGINE SPEED”.
   Check engine speed changes according to throttle position.

OK or NG

OK >> GO TO 5.
NG >> GO TO 3.

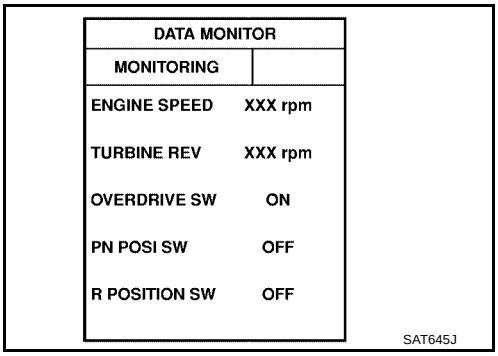

3. DETECT MALFUNCTIONING ITEM

Check the following items:

- Harness for short or open between TCM and ECM
- Resistor and ignition coil
  Refer to EC-645, "IGNITION SIGNAL" .

OK or NG

OK >> GO TO 5.
NG >> Repair or replace damaged parts.

4. CHECK INPUT SIGNAL (WITHOUT CONSULT-II)

Without CONSULT-II

1. Start engine.
2. Check voltage between TCM harness connector E143 terminal 39 (W/G) and ground.

Voltage **Refer to EC-105, "ECM INSPECTION TABLE" (ECM terminal 103).**

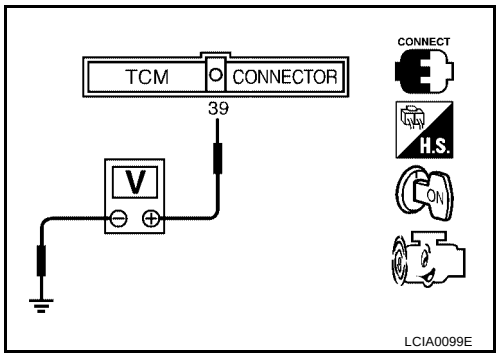

OK or NG

OK >> GO TO 5.
NG >> GO TO 3.

5. CHECK DTC

Perform AT-123, "Diagnostic Trouble Code (DTC) Confirmation Procedure" .

OK or NG

OK >> **INSPECTION END**
NG >> GO TO 6.

6. CHECK TCM INSPECTION

1. Perform TCM input/output signal inspection. Refer to AT-96, "TCM Terminals and Reference Value" .
2. If NG, recheck TCM pin terminals for damage or loose connection with harness connector.

OK or NG

OK >> **INSPECTION END**
NG >> Repair or replace damaged parts.

DTC P0731 A/T 1ST GEAR FUNCTION

PFP:31940

Description

UCS000NU

- This malfunction will not be detected while the O/D OFF indicator lamp is indicating another self-diagnosis malfunction.
- This malfunction is detected when the A/T does not shift into first gear position as instructed by the TCM. This is not caused by electrical malfunction (circuits open or shorted) but by mechanical malfunction such as control valve sticking, improper solenoid valve operation, etc.

Gear position	1	2	3	4
Shift solenoid valve A	ON (Closed)	OFF (Open)	OFF (Open)	ON (Closed)
Shift solenoid valve B	ON (Closed)	ON (Closed)	OFF (Open)	OFF (Open)

On Board Diagnosis Logic

UCS000NV

This diagnosis monitors actual gear position by checking the torque converter slip ratio calculated by TCM as follows:
Torque converter slip ratio = A x C/B
A: Output shaft revolution signal from revolution sensor
B: Engine speed signal from ECM
C: Gear ratio determined as gear position which TCM supposes
If the actual gear position is higher than the position (1st) supposed by TCM, the slip ratio will be more than normal. In case the ratio exceeds the specified value, TCM judges this diagnosis malfunction.
This malfunction will be caused when either shift solenoid valve A is stuck open or shift solenoid valve B is stuck open.
Gear positions supposed by TCM are as follows.
In case of gear position with no malfunctions: **1** , 2, 3 and 4 positions
In case of gear position with shift solenoid valve A stuck open: **2*** , 2, 3 and 3 positions
In case of gear position with shift solenoid valve B stuck open: **4*** , 3, 3 and 4 positions to each gear position above
*: P0731 is detected.
Diagnostic trouble code “A/T 1ST GR FNCTN” with CONSULT-II or P0731 without CONSULT-II is detected when A/T cannot be shifted to the 1st gear position even if electrical circuit is good.

Possible Cause

UCS000NW

Check the following items.

- Shift solenoid valve A
- Shift solenoid valve B
- Each clutch
- Hydraulic control circuit

Diagnostic Trouble Code (DTC) Confirmation Procedure

UCS000NX

CAUTION:

- **Always drive vehicle at a safe speed.**
- **Be careful not to rev engine into the red zone on the tachometer.**

NOTE:
If “DTC Confirmation Procedure” has been previously conducted, always turn ignition switch OFF and wait at least 10 seconds before conducting the next test.
TESTING CONDITION:
Always drive vehicle on a level road to improve the accuracy of test.
After the repair, perform the following procedure to confirm the malfunction is eliminated.

WITH CONSULT-II

1. Start engine and select “DATA MONITOR” mode for “A/T” with CONSULT-II.
2. Make sure that output voltage of A/T fluid temperature sensor is within the range below.
   FLUID TEMP SEN: 0.5 - 1.5V
   If out of range, drive the vehicle to decrease the voltage (warm up the fluid) or stop engine to increase the voltage (cool down the fluid).
3. Select “1ST GR FNCTN P0731” of “DTC WORK SUPPORT” mode for “A/T” with CONSULT-II and touch “START”.

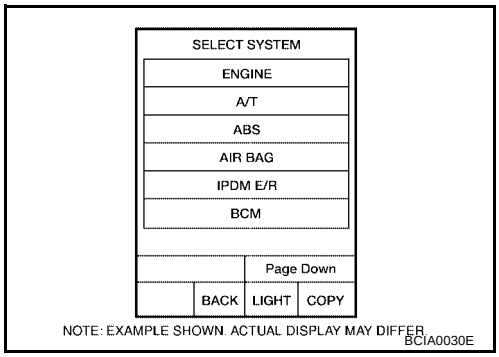

4. Accelerate vehicle to 20 to 25 km/h (12 to 16 MPH) under the following condition and release the accelerator pedal completely.
   THROTTLE POSI: Less than 1.0/8 (at all times during step 4)
   Selector lever: D position
   - **Check that “GEAR” shows “2” after releasing pedal.**
5. Depress accelerator pedal to WOT (more than 7.0/8 of “THROTTLE POSI”) quickly from a speed of 20 to 25 km/h (12 to 16 MPH) until “TESTING” changes to “STOP VEHICLE” or “COMPLETED”. (It will take approximately 3 seconds.)
   If the check result NG appears on CONSULT-II screen, go to AT-130, "Diagnostic Procedure" .
   If “STOP VEHICLE” appears on CONSULT-II screen, go to the following step.
   - **Check that “GEAR” shows “1” when depressing accelerator pedal to WOT.**
   - **If “TESTING” does not appear on CONSULT-II for a long time, select “SELF-DIAG RESULTS” for “ENGINE”. In case a 1st trip DTC other than P0731 is shown, refer to applicable “TROUBLE DIAGNOSIS FOR DTC”.**

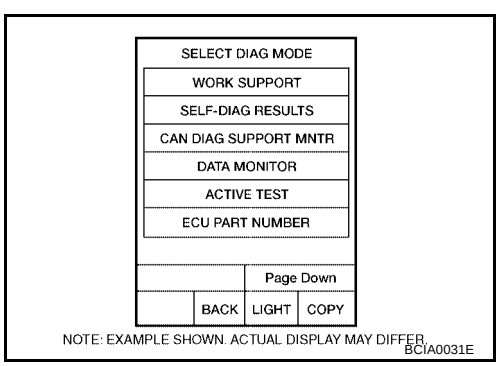

6. Stop vehicle.
7. Follow the instruction displayed. (Check for normal shifting referring to the table below.)

Vehicle condition	Gear on actual transmission shift pattern when screen is changed to 1 → 2 → 3 → 4
No malfunction exists.	1 → 2 → 3 → 4
Malfunction for P0731 exists.	2 → 2 → 3 → 3
	4 → 3 → 3 → 4

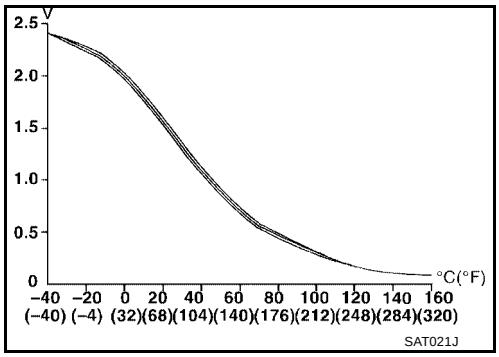

8. Make sure that “OK” is displayed. (If “NG” is displayed, refer to “DIAGNOSTIC PROCEDURE”.)
   Refer to AT-130, "Diagnostic Procedure" .
   Refer to AT-364, "Shift Schedule" .

WITH GST

Follow the procedure “With CONSULT-II”.

Wiring Diagram — AT — 1ST

UCS000NY

AT-1STSIG-01

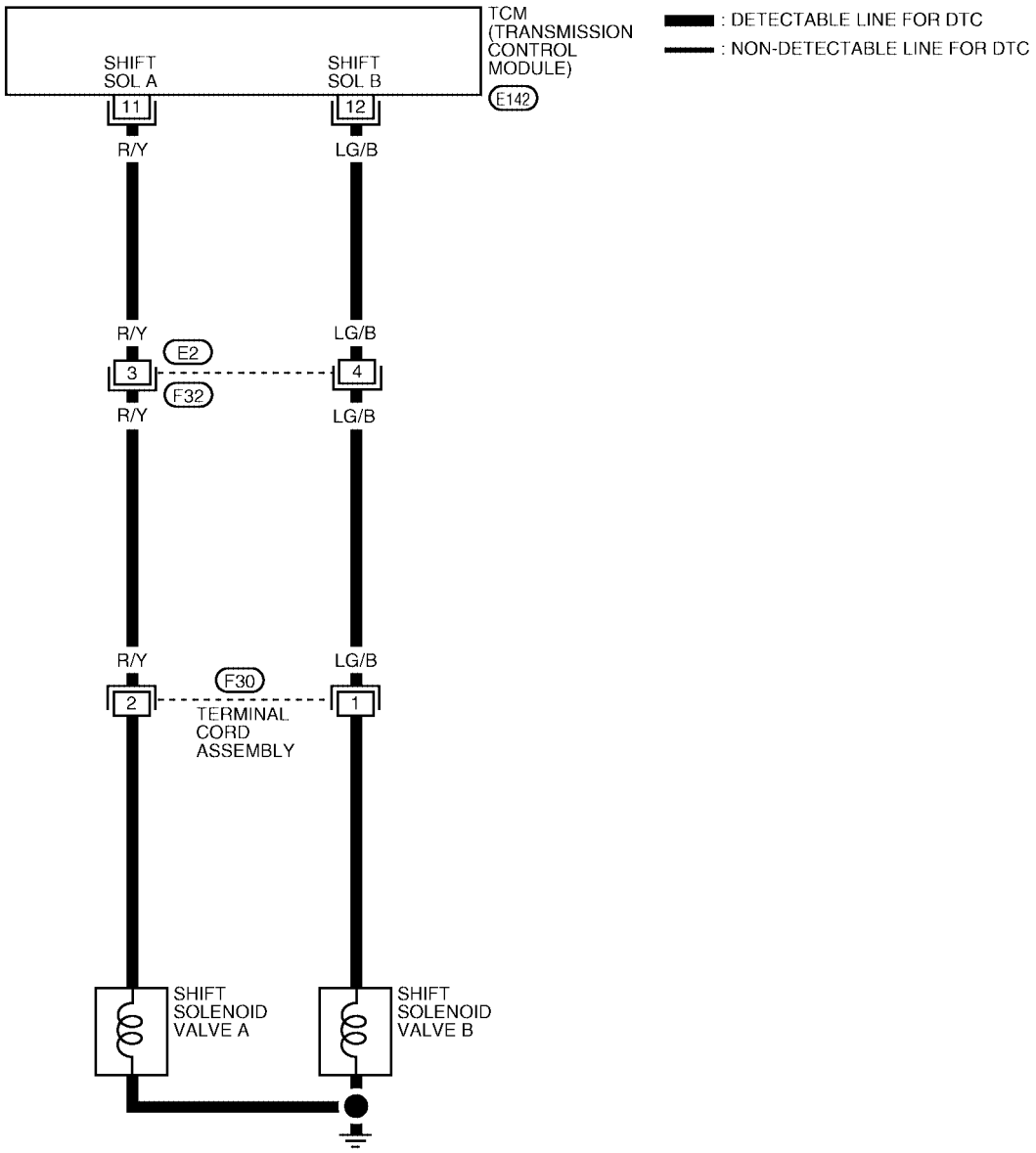

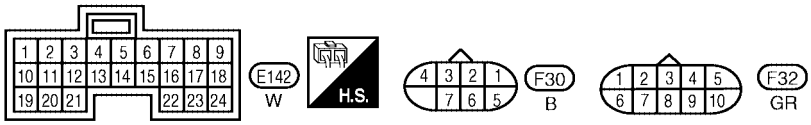

BCWA0174E

TCM TERMINALS AND REFERENCE VALUE (MEASURED BETWEEN EACH TERMINAL AND GROUND)				
TERMINAL	WIRE COLOR	ITEM	CONDITION	DATA (APPROX.)
11	R/Y	SHIFT SOLENOID VALVE A	WHEN SHIFT SOLENOID VALVE A IS OPERATING (DRIVING IN D_1 OR D_4)	BATTERY VOLTAGE
			WHEN SHIFT SOLENOID VALVE A IS NOT OPERATING (DRIVING IN D_2 OR D_3)	0V
12	LG/B	SHIFT SOLENOID VALVE B	WHEN SHIFT SOLENOID VALVE B IS OPERATING (DRIVING IN D_1 OR D_2)	BATTERY VOLTAGE
			WHEN SHIFT SOLENOID VALVE B IS NOT OPERATING (DRIVING IN D_3 OR D_4)	0V

Diagnostic Procedure

UCS000NZ

1. CHECK VALVE RESISTANCE

1. Remove control valve assembly. Refer to AT-253, "Control Valve Assembly and Accumulators" .
- Shift solenoid valve A
- Shift solenoid valve B
2. Check resistance between two terminals.

Solenoid valve	Terminal		Resistance (Approx.)
Shift solenoid valve A	2	Ground	20 - 30Ω
Shift solenoid valve B	1		5 - 20Ω

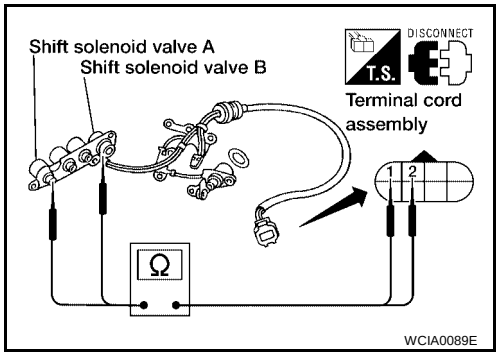

OK or NG

OK >> GO TO 2.
NG >> Repair or replace damaged parts.

2. CHECK VALVE OPERATION

1. Remove control valve assembly. Refer to AT-253, "Control Valve Assembly and Accumulators" .
- Shift solenoid valve A
- Shift solenoid valve B
2. Check solenoid valve by listening for its operating sound while applying battery voltage to the terminal and ground.

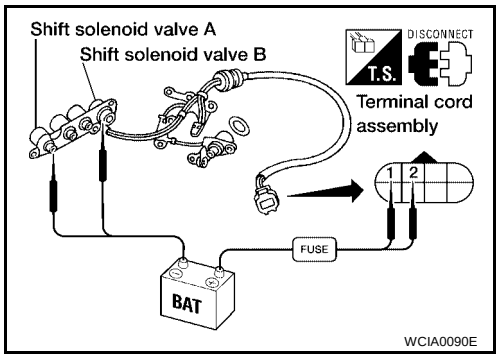

OK or NG

OK >> GO TO 3.
NG >> Repair or replace shift solenoid valve assembly.

3. CHECK CONTROL VALVE

1. Disassemble control valve assembly. Refer to AT-290, "Control Valve Assembly" .
2. Check to ensure that:
- Valve, sleeve and plug slide along valve bore under their own weight.
- Valve, sleeve and plug are free from burrs, dents and scratches.
- Control valve springs are free from damage, deformation and fatigue.
- Hydraulic line is free from obstacles.

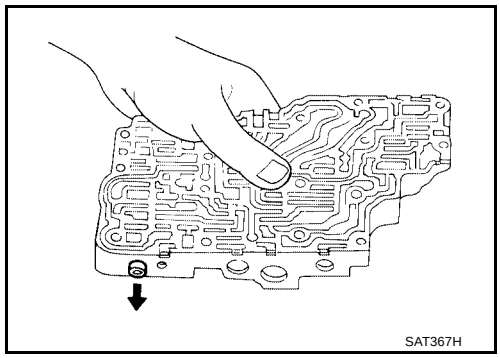

OK or NG

OK >> GO TO 4.
NG >> Repair control valve assembly.

4. CHECK DTC

Perform AT-127, "Diagnostic Trouble Code (DTC) Confirmation Procedure" .

OK or NG

OK >> **INSPECTION END**
NG >> Check transaxle inner parts. (Clutch, brake, etc.)

DTC P0732 A/T 2ND GEAR FUNCTION

PFP:31940

Description

UCS000O0

- This malfunction will not be detected while the O/D OFF indicator lamp is indicating another self-diagnosis malfunction.
- This malfunction is detected when the A/T does not shift into second gear position as instructed by the TCM. This is not caused by electrical malfunction (circuits open or shorted) but by mechanical malfunction such as control valve sticking, improper solenoid valve operation, etc.

Gear position	1	2	3	4
Shift solenoid valve A	ON (Closed)	OFF (Open)	OFF (Open)	ON (Closed)
Shift solenoid valve B	ON (Closed)	ON (Closed)	OFF (Open)	OFF (Open)

On Board Diagnosis Logic

UCS000O1

This diagnosis monitors actual gear position by checking the torque converter slip ratio calculated by TCM as follows:
Torque converter slip ratio = A x C/B
A: Output shaft revolution signal from revolution sensor
B: Engine speed signal from ECM
C: Gear ratio determined as gear position which TCM supposes
If the actual gear position is higher than the position (2nd) supposed by TCM, the slip ratio will be more than normal. In case the ratio exceeds the specified value, TCM judges this diagnosis malfunction.
This malfunction will be caused when shift solenoid valve B is stuck open.
Gear positions supposed by TCM are as follows.
In case of gear position with no malfunctions: 1, **2** , 3 and 4 positions
In case of gear position with shift solenoid valve B stuck open: 4, **3*** , 3 and 4 positions to each gear position above
*: P0732 is detected.
Diagnostic trouble code “A/T 2ND GR FNCTN” with CONSULT-II or P0732 without CONSULT-II is detected when A/T cannot be shifted to the 2nd gear position even if electrical circuit is good.

Possible Cause

UCS000O2

Check the following items.

- Shift solenoid valve B
- Each clutch
- Hydraulic control circuit

Diagnostic Trouble Code (DTC) Confirmation Procedure

UCS000O3

CAUTION:

- **Always drive vehicle at a safe speed.**
- **Be careful not to rev engine into the red zone on the tachometer.**

NOTE:
If “DTC Confirmation Procedure” has been previously conducted, always turn ignition switch OFF and wait at least 10 seconds before conducting the next test.
TESTING CONDITION:
Always drive vehicle on a level road to improve the accuracy of test.
After the repair, perform the following procedure to confirm the malfunction is eliminated.

WITH CONSULT-II

1. Start engine and select “DATA MONITOR” mode for “A/T” with CONSULT-II.
2. Make sure that output voltage of A/T fluid temperature sensor is within the range below.
   FLUID TEMP SEN: 0.5 - 1.5V
   If out of range, drive the vehicle to decrease the voltage (warm up the fluid) or stop engine to increase the voltage (cool down the fluid).
3. Select “2ND GR FNCTN P0732” of “DTC WORK SUPPORT” mode for “A/T” with CONSULT-II and touch “START”.

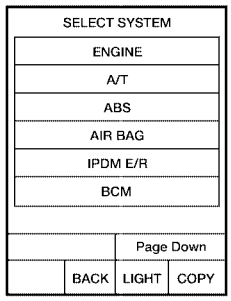

NOTE: EXAMPLE SHOWN. ACTUAL DISPLAY MAY DIFFER
BCIA0030E

4. Accelerate vehicle to 45 to 50 km/h (28 to 31 MPH) under the following condition and release the accelerator pedal completely.
   THROTTLE POSI: Less than 1.0/8
   Selector lever: D position (O/D ON)
   - **Check that “GEAR” shows “3” or “4” after releasing pedal.**
5. Depress accelerator pedal to WOT (more than 7.0/8 of “THROTTLE POSI”) quickly from a speed of 45 to 50 km/h (28 to 31 MPH) until “TESTING” changes to “STOP VEHICLE” or “COMPLETE”. (It will take approximately 3 seconds.)
   If the check result NG appears on CONSULT-II screen, go to AT-135, "Diagnostic Procedure" .
   If “STOP VEHICLE” appears on CONSULT-II screen, go to following step.
   - **Check that “GEAR” shows “2” when depressing accelerator pedal to WOT.**
   - **If “TESTING” does not appear on CONSULT-II for a long time, select “SELF-DIAG RESULTS” for “ENGINE”. In case a 1st trip DTC other than P0732 is shown, refer to applicable “TROUBLE DIAGNOSIS FOR DTC”.**
6. Stop vehicle.
7. Follow the instruction displayed. (Check for normal shifting referring to the table below.)

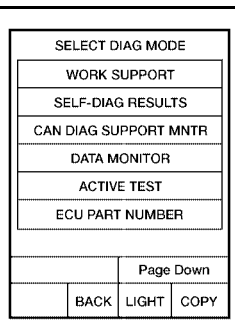

NOTE: EXAMPLE SHOWN. ACTUAL DISPLAY MAY DIFFER
BCIA0031E

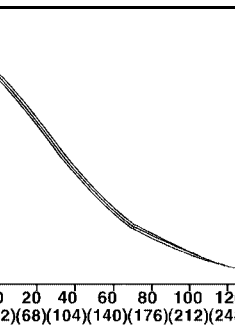

SAT021J

Vehicle condition	Gear on actual transmission shift pattern when screen is changed to 1 → 2 → 3 → 4
No malfunction exists	1 → 2 → 3 → 4
Malfunction for P0732 exists.	4 → 3 → 3 → 4

8. Make sure that “OK” is displayed. (If “NG” is displayed, refer to “DIAGNOSTIC PROCEDURE”.)
   Refer to AT-135, "Diagnostic Procedure" .
   Refer to AT-364, "Shift Schedule" .

WITH GST

Follow the procedure “With CONSULT-II”.

Wiring Diagram — AT — 2ND

UCS000O4

AT-2NDSIG-01

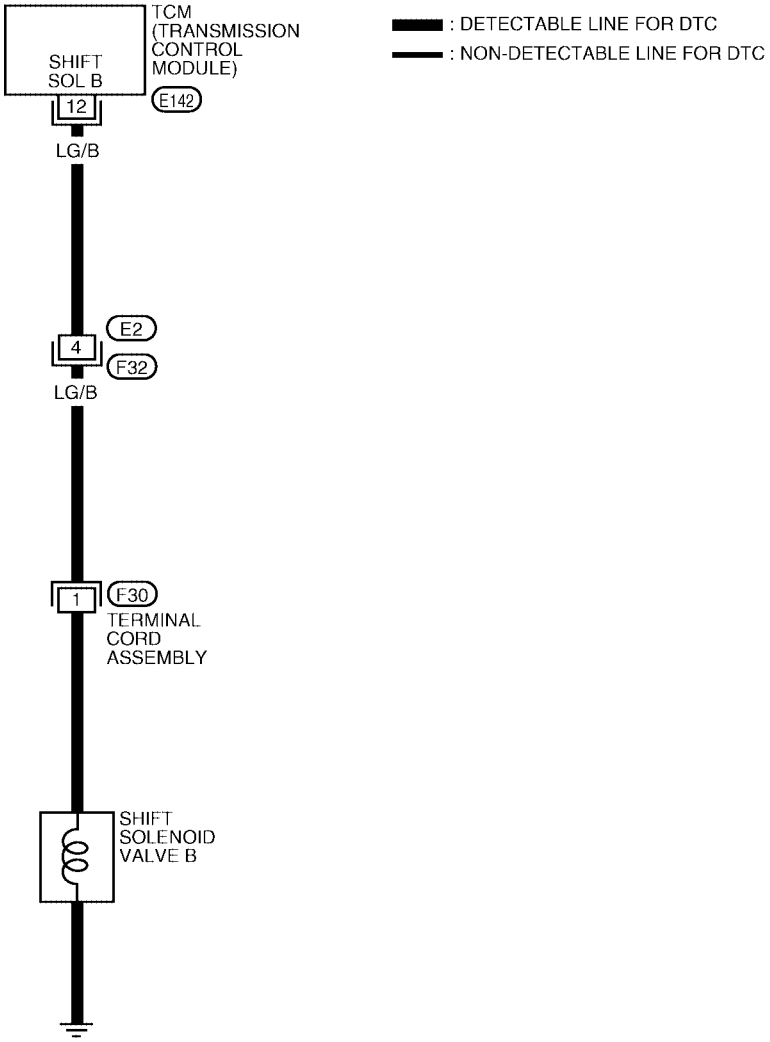

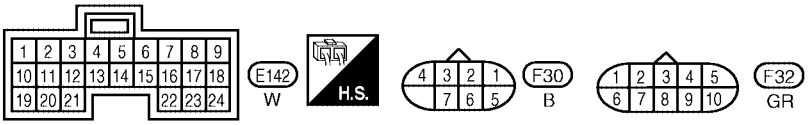

BCWA0175E

TCM TERMINALS AND REFERENCE VALUE (MEASURED BETWEEN EACH TERMINAL AND GROUND)				
TERMINAL	WIRE COLOR	ITEM	CONDITION	DATA (APPROX.)
12	LG/B	SHIFT SOLENOID VALVE B	WHEN SHIFT SOLENOID VALVE B IS OPERATING (DRIVING IN D_1 OR D_2)	BATTERY VOLTAGE
			WHEN SHIFT SOLENOID VALVE B IS NOT OPERATING (DRIVING IN D_3 OR D_4)	0V

Diagnostic Procedure

UCS000O5

1. CHECK VALVE RESISTANCE

1. Remove control valve assembly. Refer to AT-253, "Control Valve Assembly and Accumulators" .
- Shift solenoid valve B
2. Check resistance to the terminal and ground.

Solenoid valve	Terminal		Resistance (Approx.)
Shift solenoid valve B	1	Ground	5 - 20Ω

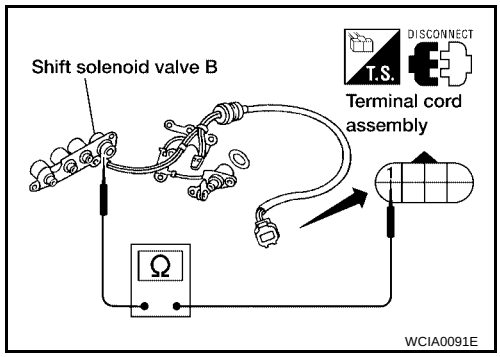

OK or NG

OK >> GO TO 2.
NG >> Repair or replace shift solenoid valve assembly.

2. CHECK VALVE OPERATION

1. Remove control valve assembly. Refer to AT-253, "Control Valve Assembly and Accumulators" .
- Shift solenoid valve B
2. Check solenoid valve by listening for its operating sound while applying battery voltage to the terminal and ground.

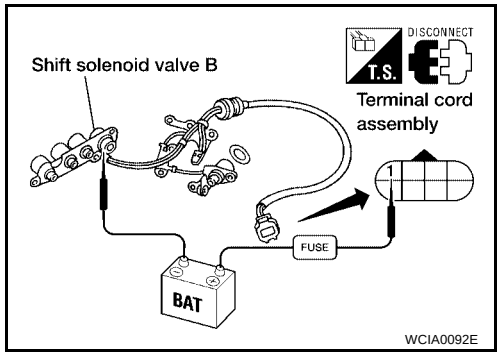

OK or NG

OK >> GO TO 3.
NG >> Repair or replace shift solenoid valve assembly.

3. CHECK CONTROL VALVE

1. Disassemble control valve assembly. Refer to AT-290, "Control Valve Assembly" .
2. Check to ensure that:
- Valve, sleeve and plug slide along valve bore under their own weight.
- Valve, sleeve and plug are free from burrs, dents and scratches.
- Control valve springs are free from damage, deformation and fatigue.
- Hydraulic line is free from obstacles.

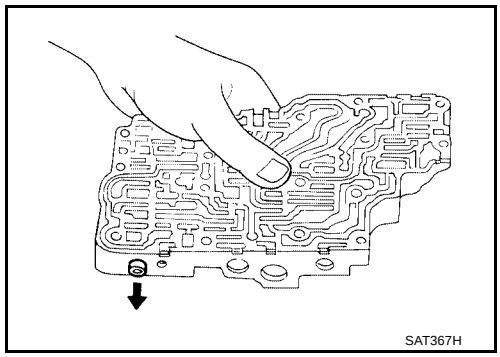

OK or NG

OK >> GO TO 4.
NG >> Repair control valve assembly.

4. CHECK DTC

Perform AT-132, "Diagnostic Trouble Code (DTC) Confirmation Procedure" .

OK or NG

OK >> **INSPECTION END**
NG >> Check transaxle inner parts. (Clutch, brake, etc.)

DTC P0733 A/T 3RD GEAR FUNCTION

PFP:31940

Description

UCS000O6

- This malfunction will not be detected while the O/D OFF indicator lamp is indicating another self-diagnosis malfunction.
- This malfunction is detected when the A/T does not shift into third gear position as instructed by the TCM. This is not caused by electrical malfunction (circuits open or shorted) but by mechanical malfunction such as control valve sticking, improper solenoid valve operation, malfunctioning servo piston or brake band, etc.

Gear position	1	2	3	4
Shift solenoid valve A	ON (Closed)	OFF (Open)	OFF (Open)	ON (Closed)
Shift solenoid valve B	ON (Closed)	ON (Closed)	OFF (Open)	OFF (Open)

On Board Diagnosis Logic

UCS000O7

This diagnosis monitors actual gear position by checking the torque converter slip ratio calculated by TCM as follows:
Torque converter slip ratio = A x C/B
A: Output shaft revolution signal from revolution sensor
B: Engine speed signal from ECM
C: Gear ratio determined as gear position which TCM supposes
If the actual gear position is higher than the position (3rd) supposed by TCM, the slip ratio will be more than normal. In case the ratio exceeds the specified value, TCM judges this diagnosis malfunction.
This malfunction will be caused when shift solenoid valve A is stuck closed.
Gear positions supposed by TCM are as follows.
In case of gear position with no malfunctions: 1, 2, **3** and 4 positions
In case of gear position with shift solenoid valve A stuck closed: 1, 1, **4*** and 4 positions to each gear position above
*: P0733 is detected.
Diagnostic trouble code “A/T 3RD GR FNCTN” with CONSULT-II or P0733 without CONSULT-II is detected when A/T cannot be shifted to the 3rd gear position even if electrical circuit is good.

Possible Cause

UCS000O8

Check the following items.

- Shift solenoid valve A
- Each clutch
- Hydraulic control circuit

Diagnostic Trouble Code (DTC) Confirmation Procedure

UCS000O9

CAUTION:

- **Always drive vehicle at a safe speed.**
- **Be careful not to rev engine into the red zone on the tachometer.**

NOTE:
If “DTC Confirmation Procedure” has been previously conducted, always turn ignition switch “OFF” and wait at least 10 seconds before conducting the next test.
TESTING CONDITION:
Always drive vehicle on a level road to improve the accuracy of test.
After the repair, perform the following procedure to confirm the malfunction is eliminated.

WITH CONSULT-II

1. Start engine and select “DATA MONITOR” mode for “A/T” with CONSULT-II.
2. Make sure that output voltage of A/T fluid temperature sensor is within the range below.
   FLUID TEMP SEN: 0.5 - 1.5V
   If out of range, drive the vehicle to decrease the voltage (warm up the fluid) or stop engine to increase the voltage (cool down the fluid).
3. Select “3RD GR FNCTN P0733” of “DTC WORK SUPPORT” mode for “A/T” with CONSULT-II and touch “START”.

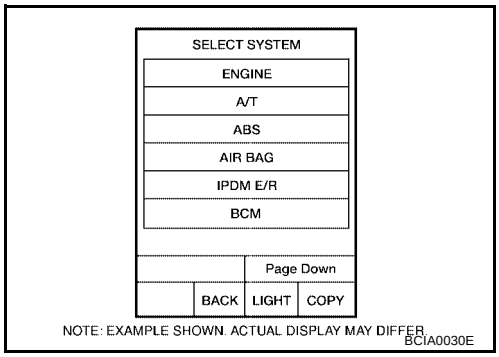

4. Accelerate vehicle to 60 to 75 km/h (37 to 47 MPH) under the following condition and release the accelerator pedal completely.
   THROTTLE POSI: Less than 1.0/8 (at all times during step 4)
   Selector lever: D position
   - **Check that “GEAR” shows “4” after releasing pedal.**
5. Depress accelerator pedal steadily with 3.5/8 - 4.5/8 of “THROTTLE POSI” from a speed of 60 to 75 km/h (37 to 47 MPH) until “TESTING” changes to “STOP VEHICLE” or “COMPLETED”. (It will take approximately 3 seconds.)
   If the check result NG appears on CONSULT-II screen, go to AT-140, "Diagnostic Procedure" .
   If “STOP VEHICLE” appears on CONSULT-II screen, go to following step.
   - **Check that “GEAR” shows “3” when depressing accelerator pedal with 3.5/8 - 4.5/8 of “THROTTLE POSI”.**
   - **If “TESTING” does not appear on CONSULT-II for a long time, select “SELF-DIAG RESULTS” for “ENGINE”. In case a 1st trip DTC other than P0733 is shown, refer to applicable “TROUBLE DIAGNOSIS FOR DTC”.**
6. Stop vehicle.
7. Follow the instruction displayed. (Check for normal shifting referring to the table below.)

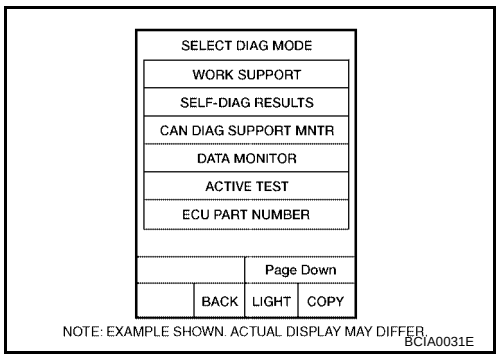

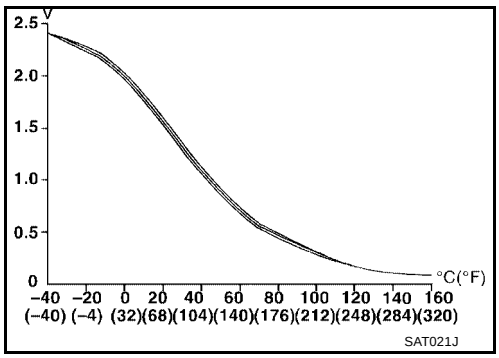

Vehicle condition	Gear on actual transmission shift pattern when screen is changed to 1 → 2 → 3 → 4
No malfunction exists.	1 → 2 → 3 → 4
Malfunction for P0733 exists.	1 → 1 → 4 → 4

8. Make sure that “OK” is displayed. (If “NG” is displayed, refer to “DIAGNOSTIC PROCEDURE”.)
   Refer to AT-140, "Diagnostic Procedure" .
   Refer to AT-364, "Shift Schedule" .

WITH GST

Follow the procedure “With CONSULT-II”.

Wiring Diagram — AT — 3RD

UCS000OA

AT-3RDSIG-01

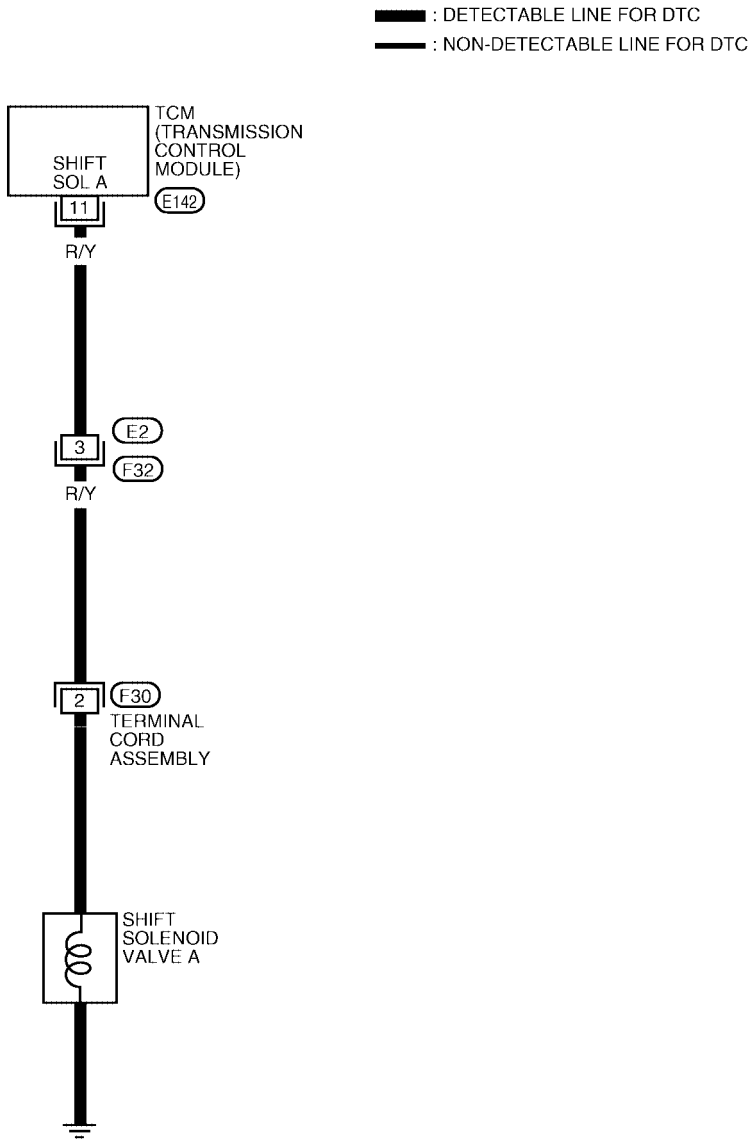

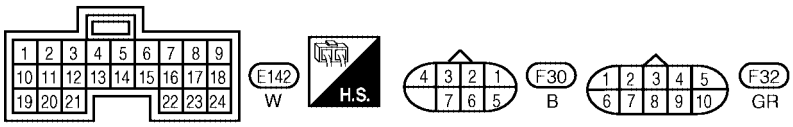

BCWA0176E

TCM TERMINALS AND REFERENCE VALUE (MEASURED BETWEEN EACH TERMINAL AND GROUND)				
TERMINAL	WIRE COLOR	ITEM	CONDITION	DATA (APPROX.)
11	R/Y	SHIFT SOLENOID VALVE A	WHEN SHIFT SOLENOID VALVE A IS OPERATING (DRIVING IN D_1 OR D_4)	BATTERY VOLTAGE
			WHEN SHIFT SOLENOID VALVE A IS NOT OPERATING (DRIVING IN D_2 OR D_3)	0V

Diagnostic Procedure

UCS000OB

1. CHECK VALVE RESISTANCE

1. Remove control valve assembly. Refer to AT-253, "Control Valve Assembly and Accumulators" .
- Shift solenoid valve A
2. Check resistance to the terminal and ground.

Solenoid valve	Terminal		Resistance (Approx.)
Shift solenoid valve A	2	Ground	20 - 30Ω

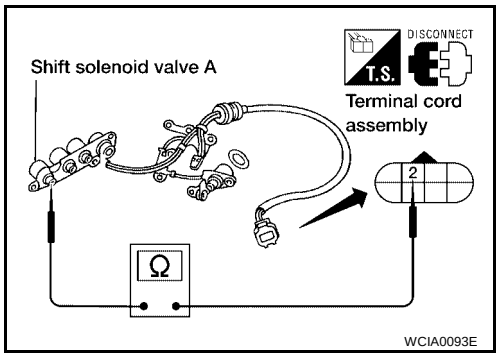

OK or NG

OK >> GO TO 2.
NG >> Repair or replace shift solenoid valve assembly.

2. CHECK VALVE OPERATION

1. Remove control valve assembly. Refer to AT-253, "Control Valve Assembly and Accumulators" .
- Shift solenoid valve A
2. Check solenoid valve by listening for its operating sound while applying battery voltage to the terminal and ground.

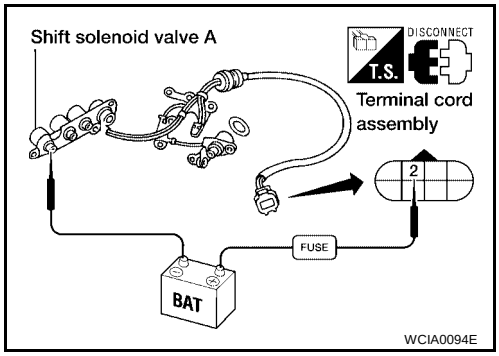

OK or NG

OK >> GO TO 3.
NG >> Repair or replace shift solenoid valve assembly.

3. CHECK CONTROL VALVE

1. Disassemble control valve assembly. Refer to AT-290, "Control Valve Assembly" .
2. Check to ensure that:
- Valve, sleeve and plug slide along valve bore under their own weight.
- Valve, sleeve and plug are free from burrs, dents and scratches.
- Control valve springs are free from damage, deformation and fatigue.
- Hydraulic line is free from obstacles.

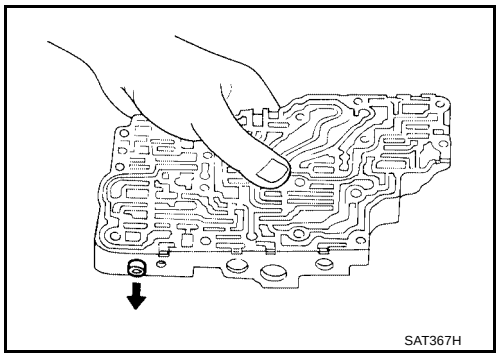

OK or NG

OK >> GO TO 4.
NG >> Repair control valve assembly.

4. CHECK DTC

Perform AT-137, "Diagnostic Trouble Code (DTC) Confirmation Procedure" .

OK or NG

OK >> **INSPECTION END**
NG >> Check transaxle inner parts. (Clutch, brake, etc.)

DTC P0734 A/T 4TH GEAR FUNCTION

PFP:31940

Description

UCS000OC

- This malfunction will not be detected while the O/D OFF indicator lamp is indicating another self-diagnosis malfunction.
- This malfunction is detected when the A/T does not shift into fourth gear position or line pressure is low as instructed by the TCM. This is not caused by electrical malfunction (circuits open or shorted) but by mechanical malfunction such as control valve sticking, improper solenoid valve operation, malfunctioning oil pump or torque converter clutch, etc.

Gear position	1	2	3	4
Shift solenoid valve A	ON (Closed)	OFF (Open)	OFF (Open)	ON (Closed)
Shift solenoid valve B	ON (Closed)	ON (Closed)	OFF (Open)	OFF (Open)

CONSULT-II REFERENCE VALUE IN DATA MONITOR MODE

Remarks: Specification data are reference values.

Monitor item	Condition	Specification
Torque converter clutch solenoid valve duty	Lock-up OFF ↓ Lock-up ON	Approximately 4% ↓ Approximately 94%
Line pressure solenoid valve duty	Small throttle opening (Low line pressure) ↓ Large throttle opening (High line pressure)	Approximately 24% ↓ Approximately 95%

On Board Diagnosis Logic

UCS000OD

This diagnosis monitors actual gear position by checking the torque converter slip ratio calculated by TCM as follows:
Torque converter slip ratio = A x C/B
A: Output shaft revolution signal from revolution sensor
B: Engine speed signal from ECM
C: Gear ratio determined as gear position which TCM supposes
If the actual gear position is much lower than the position (4th) supposed by TCM, the slip ratio will be much less than normal. In case the ratio does not reach the specified value, TCM judges this diagnosis malfunction. This malfunction will be caused when shift solenoid valve A is stuck open or shift solenoid valve B is stuck closed.
Gear positions supposed by TCM are as follows.
In case of gear position with no malfunctions: 1, 2, 3 and **4** positions
In case of gear position with shift solenoid valve A stuck open: 2, 2, 3 and **3*** position
In case of gear position with shift solenoid valve B stuck closed: 1, 2, 2 and **1*** positions to each gear position above
*: P0734 is detected.
And also, this malfunction will be caused when line pressure is lower than normal such as when line pressure solenoid valve is stuck open.
Diagnostic trouble code “A/T 4TH GR FNCTN” with CONSULT-II or P0734 without CONSULT-II is detected when A/T cannot be shifted to the 4th gear position even if electrical circuit is good.

Possible Cause

UCS000OE

Check the following items.

- Shift solenoid valve A
- Shift solenoid valve B
- Line pressure solenoid valve
- Each clutch
- Hydraulic control circuit

Diagnostic Trouble Code (DTC) Confirmation Procedure

UCS000OF

CAUTION:

- **Always drive vehicle at a safe speed.**

- **If conducting this "DTC CONFIRMATION PROCEDURE" again, always turn ignition switch OFF and wait at least 10 seconds before continuing.**
- **Be careful not to rev engine into the red zone on the tachometer.**

NOTE:
If "DTC Confirmation Procedure" has been previously conducted, always turn ignition switch OFF and wait at least 10 seconds before conducting the next test.
TESTING CONDITION:
Always drive vehicle on a level road to improve the accuracy of test.
After the repair, perform the following procedure to confirm the malfunction is eliminated.

WITH CONSULT-II

1. Start engine and select "DATA MONITOR" mode for "A/T" with CONSULT-II.
2. Make sure that output voltage of A/T fluid temperature sensor is within the range below.
   FLUID TEMP SEN: 0.5 - 1.5V
   If out of range, drive the vehicle to decrease the voltage (warm up the fluid) or stop engine to increase the voltage (cool down the fluid).
3. Select "4TH GR FNCTN P0734" of "DTC WORK SUPPORT" mode for "A/T" with CONSULT-II and touch "START".

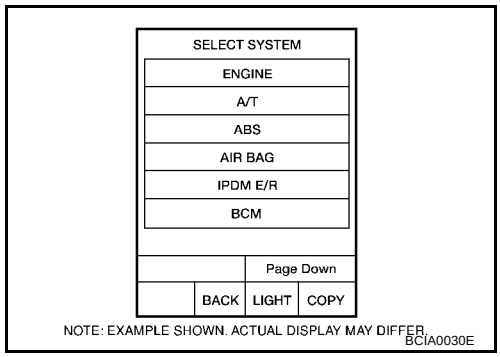

4. Accelerate vehicle to 55 to 65 km/h (34 to 40 MPH) under the following condition and release the accelerator pedal completely.
   THROTTLE POSI: Less than 5.5/8 (at all times during step 4)
   Selector lever: D position
   - **Check that "GEAR" shows "3" after releasing pedal.**
5. Depress accelerator pedal steadily with 1.0/8 - 2.0/8 of "THROTTLE POSI" from a speed of 55 to 65 km/h (34 to 40 MPH) until "TESTING" has turned to "STOP VEHICLE" or "COMPLETED". (It will take approximately 3 seconds.)
   If the check result NG appears on CONSULT-II screen, go to AT-145, "Diagnostic Procedure" .
   If "STOP VEHICLE" appears on CONSULT-II screen, go to following step.

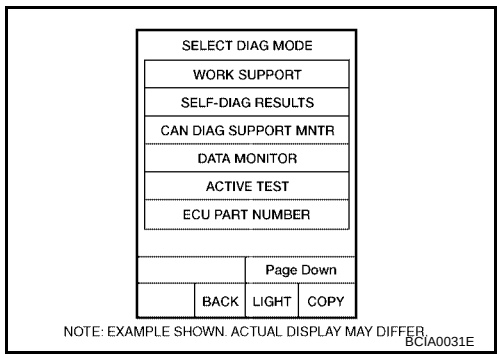

   - **Check that "GEAR" shows "4" when depressing accelerator pedal with 1.0/8 - 2.0/8 of "THROTTLE POSI".**
   - **If "TESTING" does not appear on CONSULT-II for a long time, select "SELF-DIAG RESULTS" for "ENGINE". In case a 1st trip DTC other than P0734 is shown, refer to applicable "TROUBLE DIAGNOSIS FOR DTC".**
6. Stop vehicle.
7. Follow the instruction displayed. (Check for normal shifting referring to the table below.)

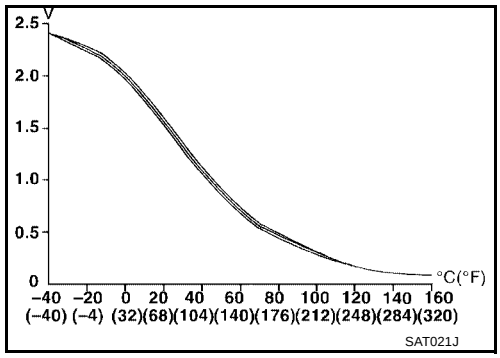

Vehicle condition	Gear on actual transmission shift pattern when screen is changed to 1 → 2 → 3 → 4
No malfunction exists	1 → 2 → 3 → 4
Malfunction for P0734 exists.	2 → 2 → 3 → 3
	1 → 2 → 2 → 1

8. Make sure that "OK" is displayed. (If "NG" is displayed, refer to "DIAGNOSTIC PROCEDURE".)
   Refer to AT-145, "Diagnostic Procedure" .
   Refer to AT-364, "Shift Schedule" .

WITH GST

Follow the procedure "With CONSULT-II".

Wiring Diagram — AT — 4TH

UCS000OG

AT-4THSIG-01

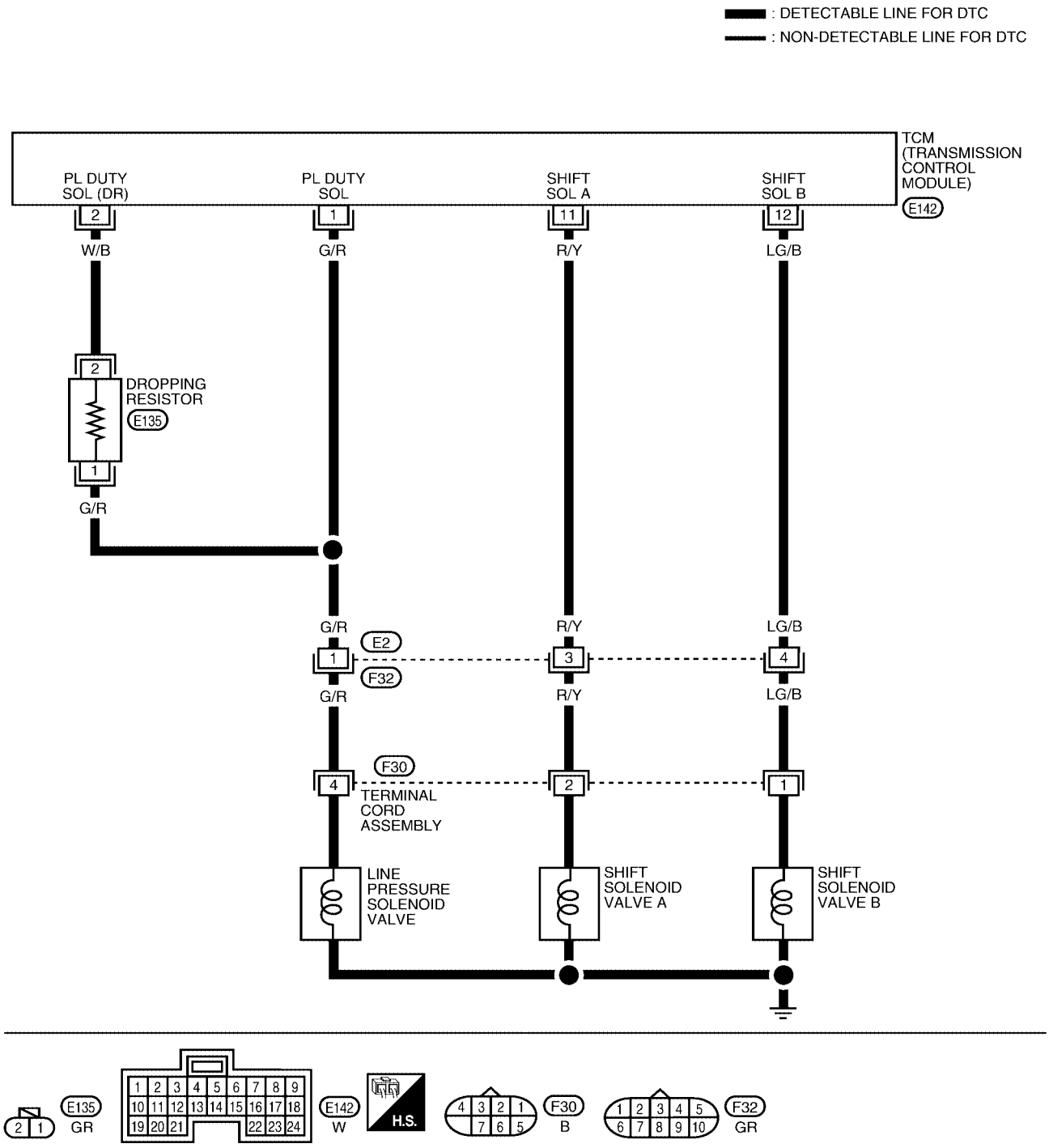

BCWA0419E

TCM TERMINALS AND REFERENCE VALUE (MEASURED BETWEEN EACH TERMINAL AND GROUND)

TERMINAL	WIRE COLOR	ITEM	CONDITION	DATA (APPROX.)
1	G/R	LINE PRESSURE SOLENOID VALVE	WHEN ACCELERATOR PEDAL IS RELEASED WHILE DRIVING	1.5 - 3.0V
			WHEN ACCELERATOR PEDAL IS DEPRESSED WHILE DRIVING	0V
2	W/B	LINE PRESSURE SOLENOID VALVE (DROPPING RESISTOR)	WHEN ACCELERATOR PEDAL IS RELEASED WHILE DRIVING	4 - 14V
			WHEN ACCELERATOR PEDAL IS DEPRESSED WHILE DRIVING	0V
11	R/Y	SHIFT SOLENOID VALVE A	WHEN SHIFT SOLENOID VALVE A IS OPERATING (DRIVING IN D_1 OR D_4)	BATTERY VOLTAGE
			WHEN SHIFT SOLENOID VALVE A IS NOT OPERATING (DRIVING IN D_2 OR D_3)	0V
12	LG/B	SHIFT SOLENOID VALVE B	WHEN SHIFT SOLENOID VALVE B IS OPERATING (DRIVING IN D_1 OR D_2)	BATTERY VOLTAGE
			WHEN SHIFT SOLENOID VALVE BE IS NOT OPERATING (DRIVING IN D_3 OR D_4)	0V

Diagnostic Procedure

UCS000OH

1. CHECK SHIFT UP (D_3 TO D_4)

During AT-81, "Cruise Test — Part 1" , does A/T shift from D_3 to D_4 at the specified speed?

Yes or No

Yes >> GO TO 11.
No >> GO TO 2.

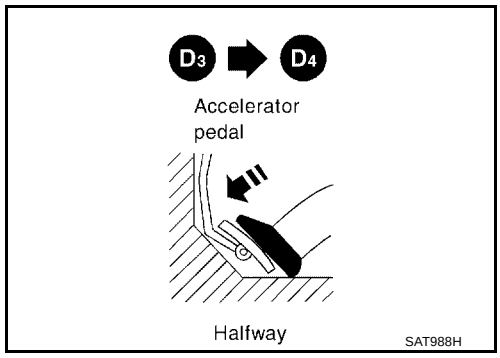

2. CHECK LINE PRESSURE

Perform line pressure test.

Engine speed rpm	Line pressure kPa (kg/cm^2 , psi)	
	D and L position	R position
Idle	500 (5.1, 73)	778 (7.9, 113)
Stall	1,223 (12.6, 179)	1,918 (19.6, 278)

Refer to AT-71, "Line Pressure Test" .

OK or NG

OK >> GO TO 3.
NG >> GO TO 7.

3. CHECK VALVE RESISTANCE

1. Remove control valve assembly. Refer to AT-253, "Control Valve Assembly and Accumulators" .
- Shift solenoid valve A
- Shift solenoid valve B
2. Check resistance between two terminals.

Solenoid valve	Terminal.		Resistance (Approx.)
Shift solenoid valve A	2	Ground	20 - 30Ω
Shift solenoid valve B	1		5 - 20Ω

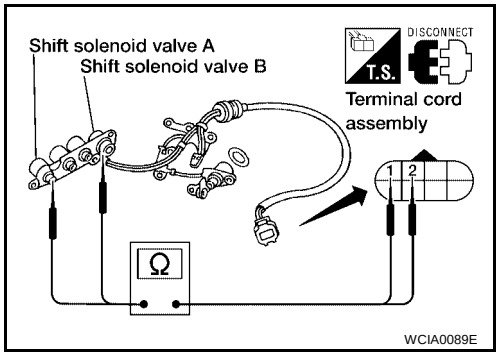

OK or NG

OK >> GO TO 5.
NG >> Replace solenoid valve assembly.

4. CHECK VALVE OPERATION

1. Remove control valve assembly. Refer to AT-253, "Control Valve Assembly and Accumulators" .
- Shift solenoid valve A
- Shift solenoid valve B
2. Check solenoid valve by listening for its operating sound while applying battery voltage to the terminal and ground.

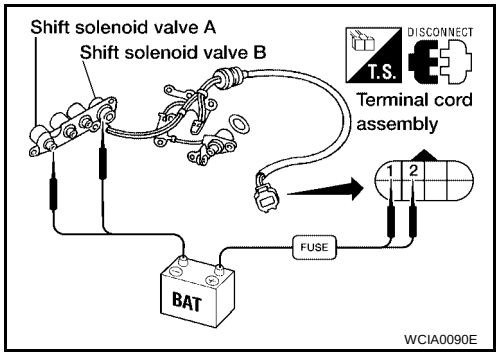

OK or NG

OK >> GO TO 5.
NG >> Replace solenoid valve assembly.

5. CHECK CONTROL VALVE

1. Disassemble control valve assembly. Refer to AT-290, "Control Valve Assembly" .
2. Check to ensure that:
- Valve, sleeve and plug slide along valve bore under their own weight.
- Valve, sleeve and plug are free from burrs, dents and scratches.
- Control valve springs are free from damage, deformation and fatigue.
- Hydraulic line is free from obstacles.

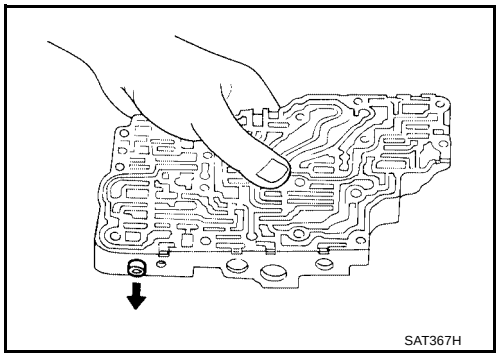

OK or NG

OK >> GO TO 6.
NG >> Repair control valve.

6. CHECK SHIFT UP (D_3 TO D_4)

Does A/T shift from D_3 to D_4 at the specified speed?

OK or NG

OK >> GO TO 11.
NG >> Check transaxle inner parts. (Clutch, brake, etc.)

7. CHECK VALVE RESISTANCE

1. Remove control valve assembly. Refer to AT-253, "Control Valve Assembly and Accumulators" .
- Line pressure solenoid valves
2. Check resistance to the terminal and ground.

Solenoid valve	Terminal		Resistance (Approx.)
Line pressure solenoid valve	4	Ground	2.5 - 5Ω

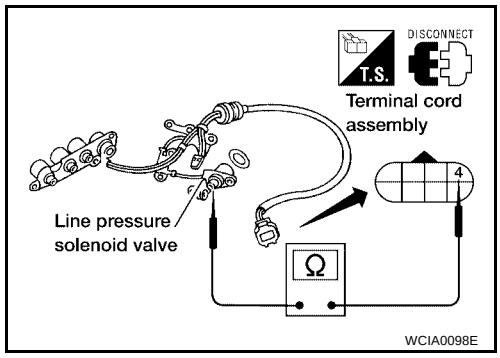

OK or NG

OK >> GO TO 9.
NG >> Replace solenoid valve assembly.

8. CHECK VALVE OPERATION

1. Remove control valve assembly. Refer to AT-253, "Control Valve Assembly and Accumulators" .
- Line pressure solenoid valves
2. Check solenoid valve by listening for its operating sound while applying battery voltage to the terminal and ground.

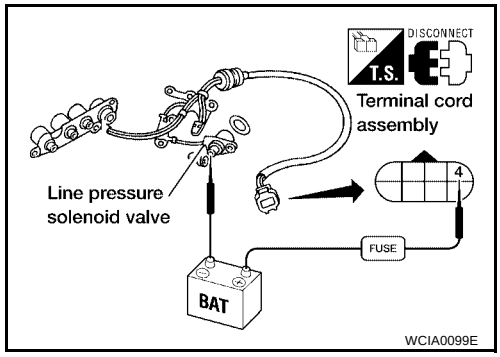

OK or NG

OK >> GO TO 9.
NG >> Replace solenoid valve assembly.

9. CHECK CONTROL VALVE

1. Disassemble control valve assembly. Refer to AT-290, "Control Valve Assembly" .
2. Check line pressure circuit valves for sticking.
- Pressure regulator valve
- Pilot valve
- Pressure modifier valve

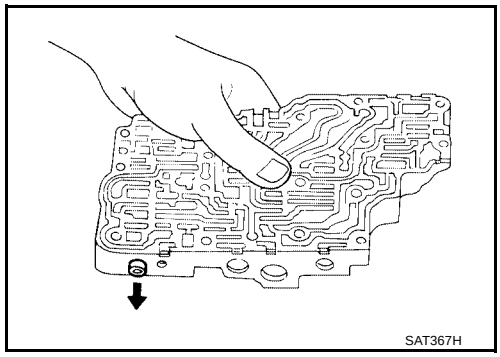

OK or NG

OK >> GO TO 10.
NG >> Repair control valve.

10. CHECK SHIFT UP (D_3 TO D_4)

Does A/T shift from D_3 to D_4 at the specified speed?

OK or NG

OK >> GO TO 11.
NG >> Check transaxle inner parts. (Clutch, brake, etc.)

11. CHECK DTC

Perform AT-142, "Diagnostic Trouble Code (DTC) Confirmation Procedure" .

OK or NG

OK >> **INSPECTION END**
NG >> Perform “Cruise test — Part 1” again and return to the start point of this test group.

DTC P0740 TORQUE CONVERTER CLUTCH SOLENOID VALVE

PFP:31940

Description

UCS000OI

The torque converter clutch solenoid valve is activated, with the gear in D4 , by the TCM in response to signals sent from the vehicle speed and the ECM (throttle opening). Lock-up piston operation will then be controlled.
Lock-up operation, however, is prohibited when A/T fluid temperature is too low.
When the accelerator pedal is depressed (less than 2/8) in lock-up condition, the engine speed should not change abruptly. If there is a big jump in engine speed, there is no lock-up.

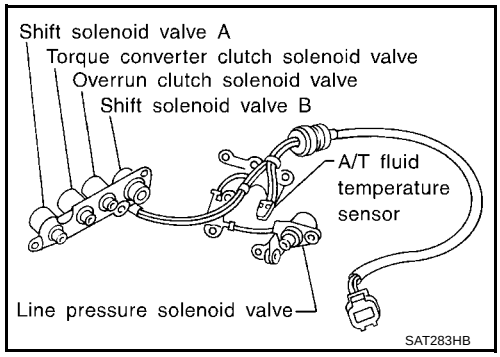

CONSULT-II REFERENCE VALUE IN DATA MONITOR MODE

Remarks: Specification data are reference values.

Monitor item	Condition	Specification
TCC S/V DUTY	Lock-up OFF ↓ Lock-up ON	Approximately 4% ↓ Approximately 94%

On Board Diagnosis Logic

UCS000OJ

Diagnostic trouble code “TCC SOLENOID/CIRC” with CONSULT-II or P0740 without CONSULT-II is detected when TCM detects an improper voltage drop when it tries to operate the solenoid valve.

Possible Cause

UCS000OK

Check the following items.

- Torque converter clutch solenoid valve
- Harness or connectors
  (The solenoid circuit is open or shorted.)

Diagnostic Trouble Code (DTC) Confirmation Procedure

UCS000OL

NOTE:
If “DTC Confirmation Procedure” has been previously conducted, always turn ignition switch OFF and wait at least 10 seconds before conducting the next test.
After the repair, perform the following procedure to confirm the malfunction is eliminated.

WITH CONSULT-II

1. Turn ignition switch to ON position. (Do not start engine.)

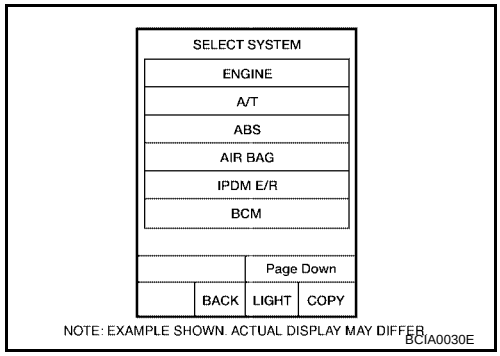

2. Select “DATA MONITOR” mode for “ENGINE” with CONSULT-II and wait at least 1 second.
3. Start engine and maintain the following condition for at least 5 consecutive seconds.
   VHCL SPEED SE: 80km/h (50 MPH) or more
   THROTTLE POSI: 0.5/8 - 1.0/8
   Selector lever: D position (O/D ON)
   Driving location: Driving the vehicle uphill (increased engine load) will help maintain the driving conditions required for this test.

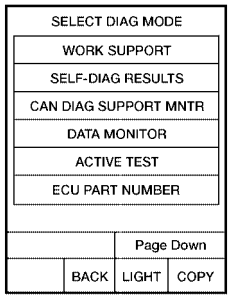

NOTE: EXAMPLE SHOWN. ACTUAL DISPLAY MAY DIFFER.
BCIA0031E

WITH GST

Follow the procedure “With CONSULT-II”.

Wiring Diagram — AT — TCV

UCS000OM

AT-TCV-01

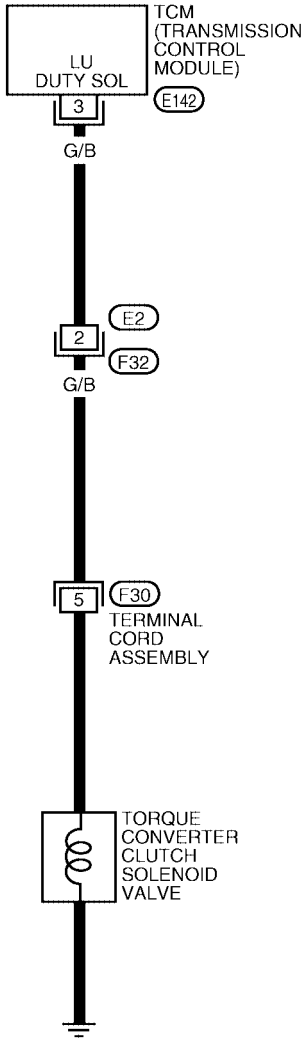

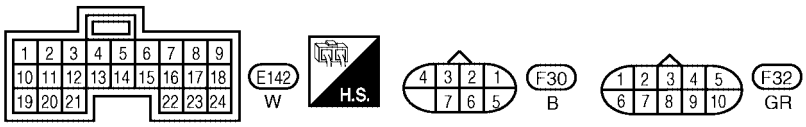

BCWA0178E

TCM TERMINALS AND REFERENCE VALUE (MEASURED BETWEEN EACH TERMINAL AND GROUND)				
TERMINAL	WIRE COLOR	ITEM	CONDITION	DATA (APPROX.)
3	G/B	TORQUE CONVERTER CLUTCH SOLENOID VALVE	WITH TORQUE CONVERTER LOCK-UP	8 - 15V
			WITHOUT TORQUE CONVERTER LOCK-UP	0V

Diagnostic Procedure

UCS000ON

1. CHECK VALVE RESISTANCE

1. Turn ignition switch to OFF position.
2. Disconnect terminal cord assembly connector in engine compartment.
3. Check resistance between terminal cord assembly harness connector F30 terminal 5 and ground.

Resistance : 5 - 20Ω

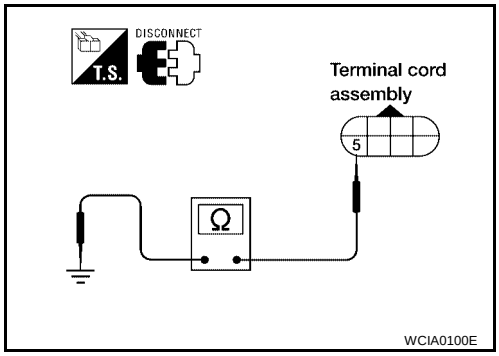

OK or NG

OK >> GO TO 3.
NG >> GO TO 2.

2. CHECK VALVE OPERATION

1. Remove oil pan. Refer to AT-253, "Control Valve Assembly and Accumulators" .
2. Check the following items:

– Torque converter clutch solenoid valve
• Check solenoid valve by listening for its operating sound while applying battery voltage to the terminal and ground.
– Harness of terminal cord assembly for short or open

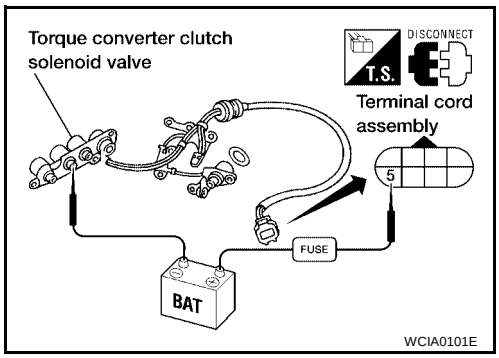

OK or NG

OK >> GO TO 3.
NG >> Repair or replace damaged parts.

3. CHECK POWER SOURCE CIRCUIT

1. Turn ignition switch to OFF position.
2. Disconnect TCM harness connector.
3. Check continuity between terminal cord assembly harness connector F30 terminal 5(G/B) and TCM harness connector E142 terminal 3(G/B). Refer to AT-151, "Wiring Diagram — AT — TCV" .

Continuity should exist.

4. Reinstall any part removed.

OK or NG

OK >> GO TO 4.
NG >> Repair open circuit or short to ground or short to power in harness or connectors.

4. CHECK DTC

Perform AT-149, "Diagnostic Trouble Code (DTC) Confirmation Procedure" .

OK or NG

OK >> **INSPECTION END**
NG >> GO TO 5.

5. CHECK TCM INSPECTION

1. Perform TCM input/output signal inspection. Refer to AT-96, "TCM Terminals and Reference Value" .
2. If NG, recheck TCM pin terminals for damage or loose connection with harness connector.

OK or NG

OK >> **INSPECTION END**
NG >> Repair or replace damaged parts.

DTC P0744 A/T TCC S/V FUNCTION (LOCK-UP)

PFP:31940

Description

UCS000OO

- This malfunction will not be detected while the O/D OFF indicator lamp is indicating another self-diagnosis malfunction.
- This malfunction is detected when the A/T does not shift into fourth gear position or the torque converter clutch does not lock up as instructed by the TCM. This is not caused by electrical malfunction (circuits open or shorted) but by mechanical malfunction such as control valve sticking, improper solenoid valve operation, malfunctioning oil pump or torque converter clutch, etc.

CONSULT-II REFERENCE VALUE IN DATA MONITOR MODE

Remarks: Specification data are reference values.

Monitor item	Condition	Specification
TCC S/V DUTY	Lock-up OFF ↓ Lock-up ON	Approximately 4% ↓ Approximately 94%

On Board Diagnosis Logic

UCS000OP

This diagnosis monitors actual gear position by checking the torque converter slip ratio calculated by TCM as follows:
Torque converter slip ratio = A x C/B
A: Output shaft revolution signal from revolution sensor
B: Engine speed signal from ECM
C: Gear ratio determined as gear position which TCM supposes
If the actual gear position is much lower than the position (4th) supposed by TCM, the slip ratio will be much less than normal. In case the ratio does not reach the specified value, TCM judges this diagnosis malfunction.
This malfunction will be caused when shift solenoid valve B is stuck closed.
Gear positions supposed by TCM are as follows.
In case of gear position with no malfunctions: 1, 2, 3 and 4 positions
In case of gear position with shift solenoid valve B stuck closed: 1, 2, 2 and **1** * positions to each gear position above
*: P0744 is detected.
Diagnostic trouble code “A/T TCC S/V FNCTN” with CONSULT-II or P0744 without CONSULT-II is detected when A/T cannot perform lock-up even if electrical circuit is good.

Possible Cause

UCS000OQ

Check the following items.

- Line pressure solenoid valve
- Torque converter clutch solenoid valve
- Each clutch
- Hydraulic control circuit

Diagnostic Trouble Code (DTC) Confirmation Procedure

UCS000OR

CAUTION:
Always drive vehicle at a safe speed.

NOTE:
If “DTC Confirmation Procedure” has been previously conducted, always turn ignition switch OFF and wait at least 10 seconds before conducting the next test.
After the repair, perform the following procedure to confirm the malfunction is eliminated.

WITH CONSULT-II

1. Start engine and select “DATA MONITOR” mode for “A/T” with CONSULT-II.
2. Make sure that output voltage of A/T fluid temperature sensor is within the range below.
   FLUID TEMP SEN: 0.5 - 1.5V
   If out of range, drive vehicle to decrease voltage (warm up the fluid) or stop engine to increase voltage (cool down the fluid).
3. Select “TCC S/V FNCTN P0744” of “DTC WORK SUPPORT” mode for “A/T” with CONSULT-II and touch “START”.

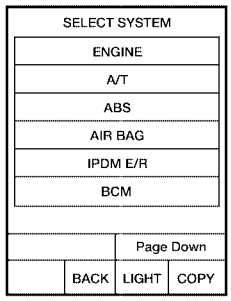

NOTE: EXAMPLE SHOWN. ACTUAL DISPLAY MAY DIFFER
BCIA0030E

4. Accelerate vehicle to more than 80 km/h (50 MPH) and maintain the following condition continuously until “TESTING” has turned to “COMPLETE”. (It will take approximately 30 seconds after “TESTING” shows.)
   THROTTLE POSI: 1.0/8 - 2.0/8 (at all times during step 4)
   Selector lever: D position
   TCC S/V DUTY: More than 94%
   VHCL/S SE-A/T: Constant speed of more than 80 km/h (50 MPH)
   - **Check that “GEAR” shows “4”.**
   - **For shift schedule, refer to AT-364, "Shift Schedule" .**
   - **If “TESTING” does not appear on CONSULT-II for a long time, select “SELF-DIAG RESULTS”. In case a 1st trip DTC other than P0744 is shown, refer to applicable “TROUBLE DIAGNOSIS FOR DTC”.**

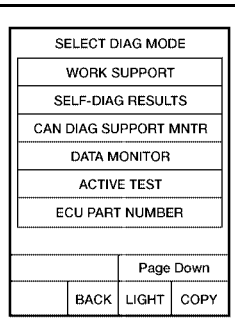

NOTE: EXAMPLE SHOWN. ACTUAL DISPLAY MAY DIFFER
BCIA0031E

5. Make sure that “OK” is displayed. (If “NG” is displayed, refer to “DIAGNOSTIC PROCEDURE”.)
   Refer to AT-157, "Diagnostic Procedure" .
   Refer to AT-364, "Shift Schedule" .

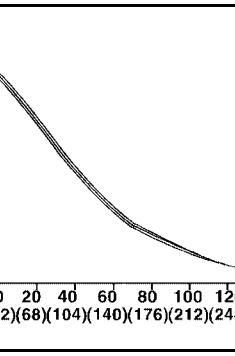

WITH GST

Follow the procedure “With CONSULT-II”.

Wiring Diagram — AT — TCCSIG

UCS000OS

AT-TCCSIG-01

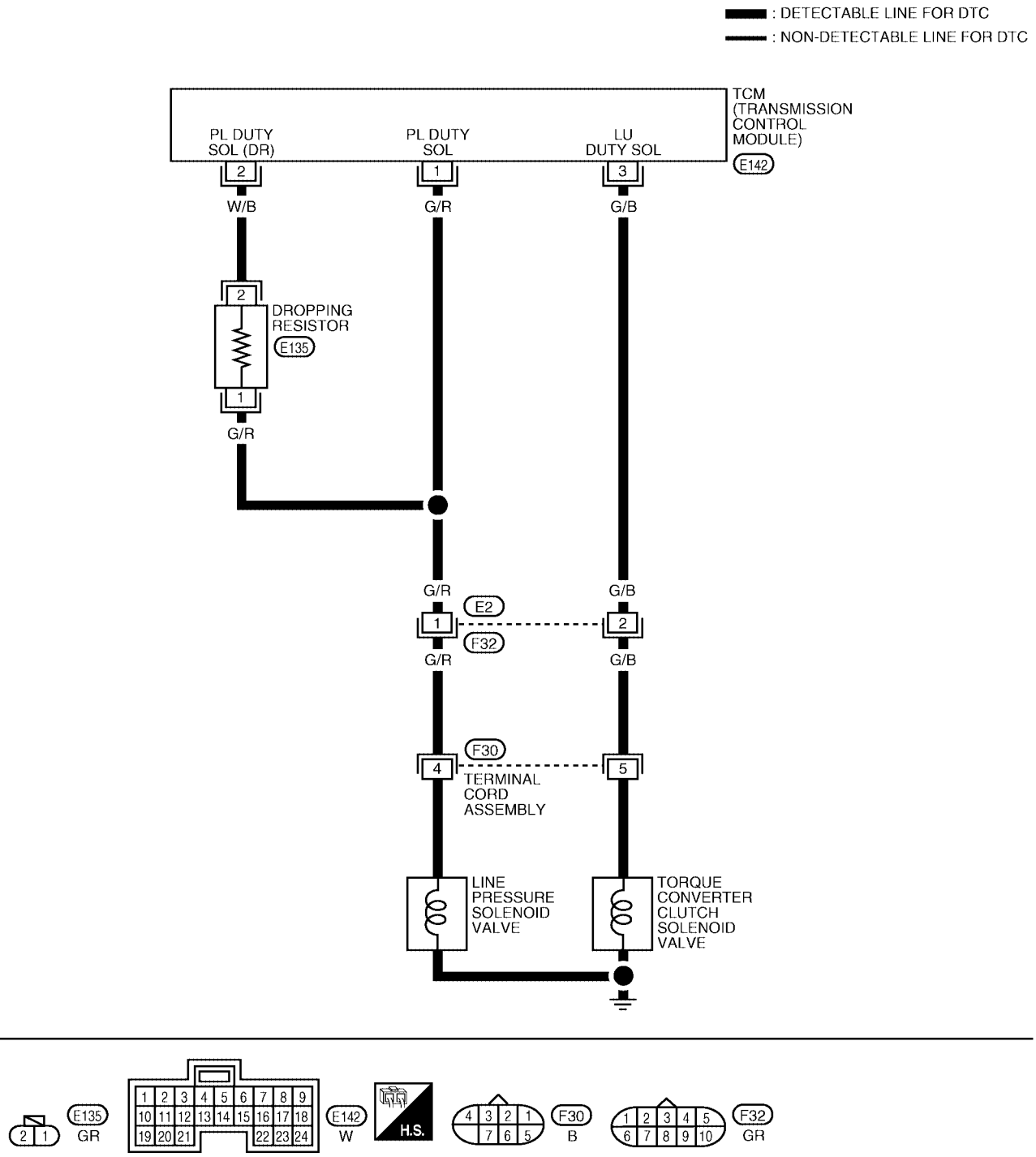

BCWA0179E

TCM TERMINALS AND REFERENCE VALUE (MEASURED BETWEEN EACH TERMINAL AND GROUND)

TERMINAL	WIRE COLOR	ITEM	CONDITION	DATA (APPROX.)
1	G/R	LINE PRESSURE SOLENOID VALVE	WHEN ACCELERATOR PEDAL IS RELEASED WHILE DRIVING	1.5 - 3.0V
			WHEN ACCELERATOR PEDAL IS DEPRESSED WHILE DRIVING	0V
2	W/B	LINE PRESSURE SOLENOID VALVE (DROPPING RESISTOR)	WHEN ACCELERATOR PEDAL IS RELEASED WHILE DRIVING	4 - 14V
			WHEN ACCELERATOR PEDAL IS DEPRESSED WHILE DRIVING	0V
3	G/B	TORQUE CONVERTER CLUTCH SOLENOID VALVE	WITH TORQUE CONVERTER LOCK-UP	8 - 15V
			WITHOUT TORQUE CONVERTER LOCK-UP	0V

Diagnostic Procedure

UCS000OT

1. CHECK SHIFT UP (D_3 TO D_4)

During AT-81, "Cruise Test — Part 1" , does A/T shift from D_3 to D_4 at the specified speed?

Yes or No

Yes >> GO TO 11.
No >> GO TO 2.

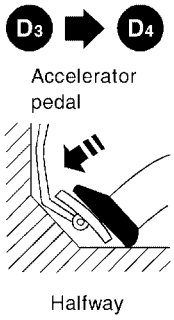

2. CHECK LINE PRESSURE

Perform line pressure test.

Engine speed rpm	Line pressure kPa (kg/cm^2 , psi)	
	D and L position	R position
Idle	500 (5.1, 73)	778 (7.9, 113)
Stall	1,223 (12.6, 179)	1,918 (19.6, 278)

Refer to AT-71, "Line Pressure Test" .

OK or NG

OK >> GO TO 3.
NG >> GO TO 6.

3. CHECK CONTROL VALVE

1. Disassemble control valve assembly. Refer to AT-290, "Control Valve Assembly" .
2. Check to ensure that:
- Valve, sleeve and plug slide along valve bore under their own weight.
- Valve, sleeve and plug are free from burrs, dents and scratches.
- Control valve springs are free from damage, deformation and fatigue.
- Hydraulic line is free from obstacles.

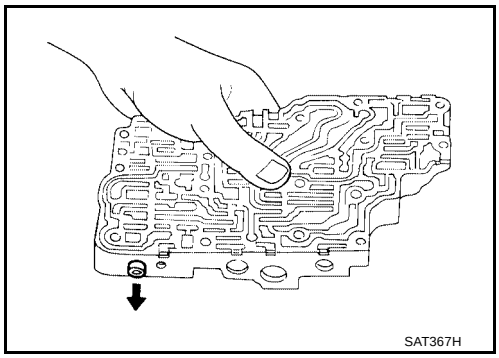

OK or NG

OK >> GO TO 4.
NG >> Repair control valve.

4. CHECK SHIFT UP (D_3 TO D_4)

Does A/T shift from D_3 to D_4 at the specified speed?

OK or NG

OK >> GO TO 5.
NG >> Check control valve again. Repair or replace control valve assembly.

5. CHECK DTC

Perform AT-154, "Diagnostic Trouble Code (DTC) Confirmation Procedure" .

OK or NG

OK >> **INSPECTION END**
NG >> GO TO 11.

6. CHECK VALVE RESISTANCE

1. Remove control valve assembly. Refer to AT-253, "Control Valve Assembly and Accumulators" .
- Line pressure solenoid valve
2. Check resistance to the terminal and ground.

Solenoid valve	Terminal		Resistance (Approx.)
Line pressure solenoid valve	4	Ground	2.5 - 5Ω

OK or NG

OK >> GO TO 8.
NG >> Replace solenoid valve assembly.

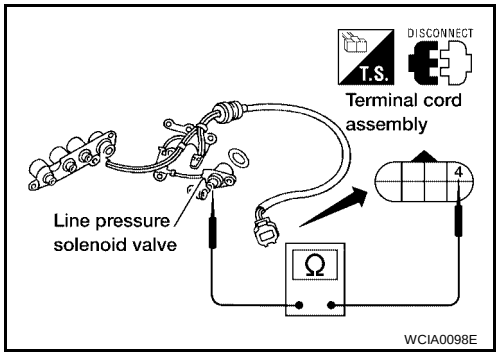

7. CHECK VALVE OPERATION

1. Remove control valve assembly. Refer to AT-253, "Control Valve Assembly and Accumulators" .
- Line pressure solenoid valve
2. Check solenoid valve by listening for its operating sound while applying battery voltage to the terminal and ground.

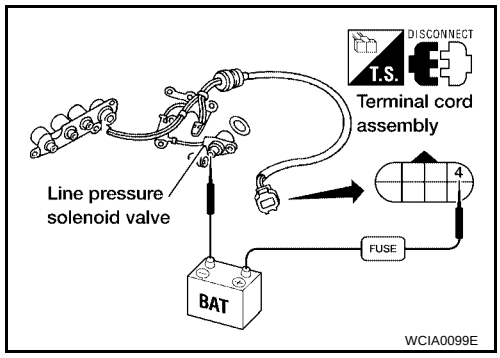

OK or NG

OK >> GO TO 8.
NG >> Replace solenoid valve assembly.

8. CHECK CONTROL VALVE

1. Disassemble control valve assembly. Refer to AT-290, "Control Valve Assembly" .
2. Check line pressure circuit valves for sticking.
- Pressure regulator valve
- Pilot valve
- Pressure modifier valve

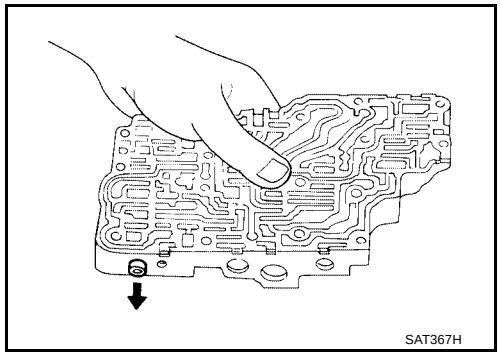

OK or NG

OK >> GO TO 9.
NG >> Repair control valve.

9. CHECK SHIFT UP (D_3 TO D_4)

Does A/T shift from D_3 to D_4 at the specified speed?

OK or NG

OK >> GO TO 10.
NG >> Check control valve again. Repair or replace control valve assembly.

10. CHECK DTC

Perform AT-154, "Diagnostic Trouble Code (DTC) Confirmation Procedure" .

OK or NG

OK >> **INSPECTION END**
NG >> GO TO 11.

11. CHECK LOCK-UP

During AT-81, "Cruise Test — Part 1" , does A/T perform lock-up at the specified speed?

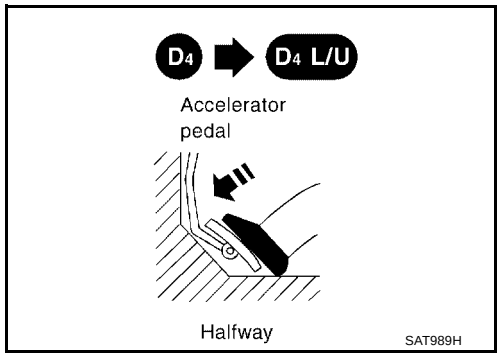

Yes or No

Yes >> Perform “Cruise test — Part 1” again and return to the start point of this test group.
No >> GO TO 12.

12. CHECK VALVE RESISTANCE

1. Remove control valve assembly. Refer to AT-253, "Control Valve Assembly and Accumulators" .
- Torque converter clutch solenoid valve
2. Check resistance to the terminal and ground.

Solenoid valve	Terminal		Resistance (Approx.)
Torque converter clutch solenoid valve	5	Ground	5 - 20Ω

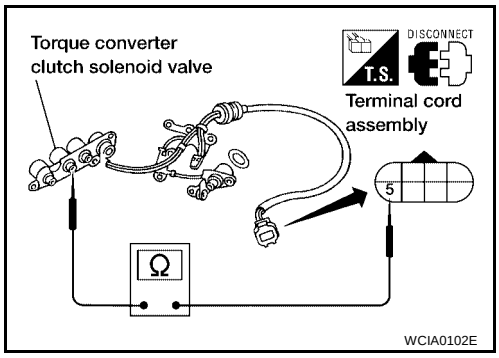

OK or NG

OK >> GO TO 14.
NG >> Replace solenoid valve assembly.

13. CHECK VALVE OPERATION

1. Remove control valve assembly. Refer to AT-253, "Control Valve Assembly and Accumulators" .
- Torque converter clutch solenoid valve
2. Check solenoid valve by listening for its operating sound while applying battery voltage to the terminal and ground.

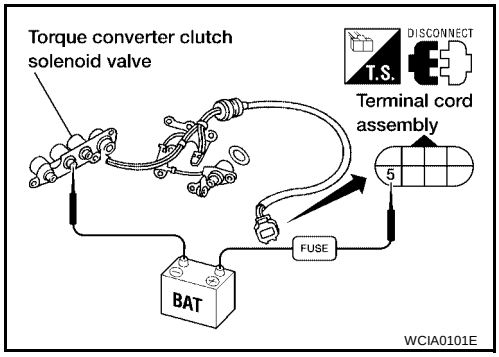

OK or NG

OK >> GO TO 14.
NG >> Replace solenoid valve assembly.

14. CHECK CONTROL VALVE

1. Disassemble control valve assembly. Refer to AT-290, "Control Valve Assembly" .
2. Check control valves for sticking.
- Torque converter clutch control valve
- Torque converter clutch relief valve

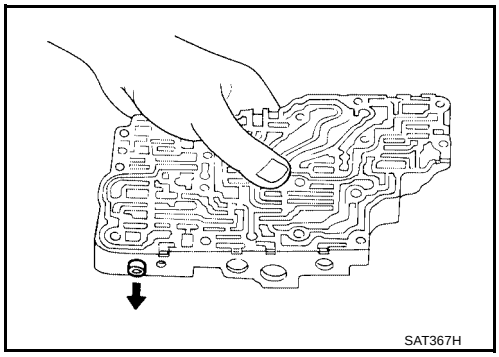

OK or NG

OK >> GO TO 15.
NG >> Repair control valve.

15. CHECK LOCK-UP

Does A/T perform lock-up at the specified speed?

Yes or No

Yes >> GO TO 16.
No >> Check control valve again. Repair or replace control valve assembly.

16. CHECK DTC

Perform AT-154, "Diagnostic Trouble Code (DTC) Confirmation Procedure" .

OK or NG

OK >> **INSPECTION END**
NG >> Perform “Cruise test — Part 1” again and return to the start point of this test group.

DTC P0745 LINE PRESSURE SOLENOID VALVE

PFP:31940

Description

UCS000OU

The line pressure solenoid valve regulates the oil pump discharge pressure to suit the driving condition in response to a signal sent from the TCM.
The line pressure duty cycle value is not consistent when the closed throttle position signal is "ON". To confirm the line pressure duty cycle at low pressure, the accelerator (throttle) should be open until the closed throttle position switch is "OFF".

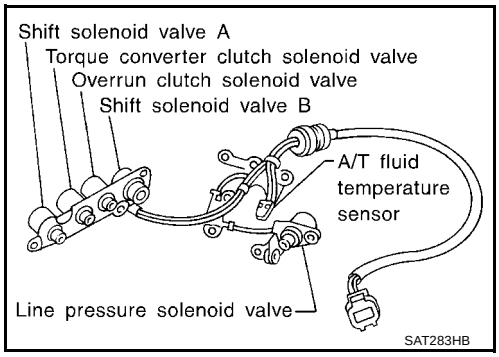

CONSULT-II REFERENCE VALUE IN DATA MONITOR MODE

Remarks: Specification data are reference values.

Monitor item	Condition	Specification
LINE PRES DTY	Small throttle opening (Low line pressure) ↓ Large throttle opening (High line pressure)	Approximately 24% ↓ Approximately 95%

On Board Diagnosis Logic

UCS000OV

Diagnostic trouble code "L/PRESS SOL/CIRC" with CONSULT-II or P0745 without CONSULT-II is detected when TCM detects an improper voltage drop when it tries to operate the solenoid valve.

Possible Cause

UCS000OW

Check the following items.

- Harness or connectors
  (The solenoid circuit is open or shorted.)
- Line pressure solenoid valve

Diagnostic Trouble Code (DTC) Confirmation Procedure

UCS000OX

NOTE:
If "DTC Confirmation Procedure" has been previously conducted, always turn ignition switch OFF and wait at least 10 seconds before conducting the next test.
After the repair, perform the following procedure to confirm the malfunction is eliminated.

WITH CONSULT-II

1. Turn ignition switch ON and select "DATA MONITOR" mode for "ENGINE" with CONSULT-II.

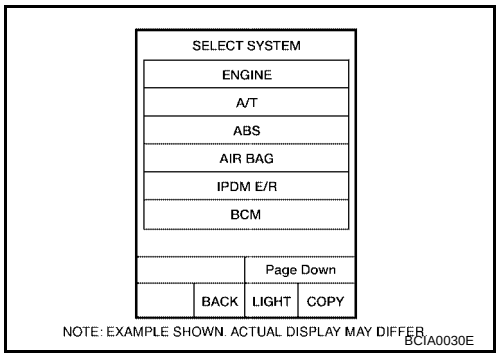

2. Depress accelerator pedal completely and wait at least 5 seconds.

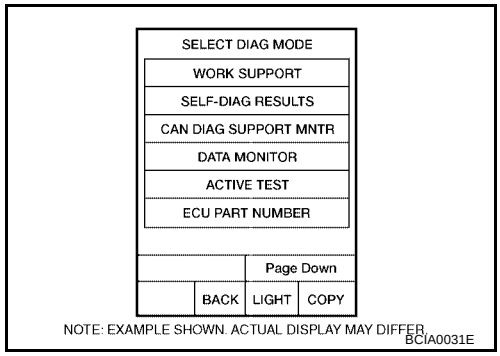

WITH GST

Follow the procedure “With CONSULT-II”.

Wiring Diagram — AT — LPSV

UCS000OY

AT-LPSV-01

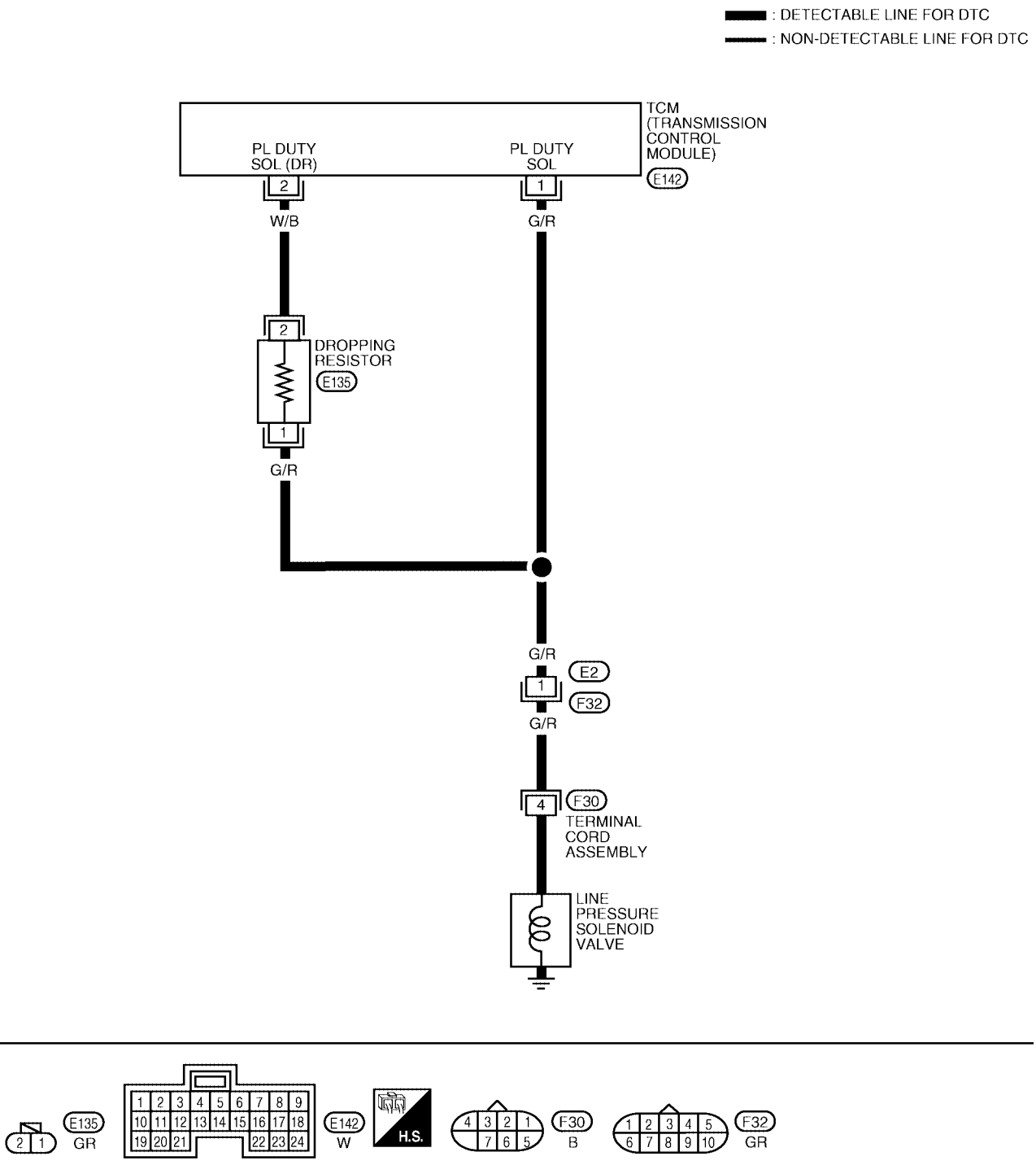

BCWA0180E

TCM TERMINALS AND REFERENCE VALUE (MEASURED BETWEEN EACH TERMINAL AND GROUND)

TERMINAL	WIRE COLOR	ITEM	CONDITION	DATA (APPROX.)
1	G/R	LINE PRESSURE SOLENOID VALVE	WHEN ACCELERATOR PEDAL IS RELEASED WHILE DRIVING	1.5 - 3.0V
			WHEN ACCELERATOR PEDAL IS DEPRESSED WHILE DRIVING	0V
2	W/B	LINE PRESSURE SOLENOID VALVE (DROPPING RESISTOR)	WHEN ACCELERATOR PEDAL IS RELEASED WHILE DRIVING	4 - 14V
			WHEN ACCELERATOR PEDAL IS DEPRESSED WHILE DRIVING	0V

Diagnostic Procedure

UCS000OZ

1. CHECK VALVE RESISTANCE

1. Turn ignition switch to OFF position.
2. Disconnect terminal cord assembly connector in engine compartment.
3. Check resistance between terminal cord assembly harness connector F30 terminal 4 and ground.

Resistance : 2.5 - 5Ω

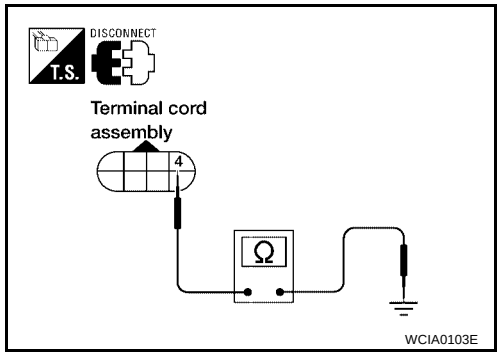

OK or NG

OK >> GO TO 3.
NG >> GO TO 2.

2. CHECK VALVE OPERATION

1. Remove control valve assembly. Refer to AT-253, "Control Valve Assembly and Accumulators" .
2. Check the following items:

– Line pressure solenoid valve

• Check solenoid valve by listening for its operating sound while applying battery voltage to the terminal and ground.

– Harness of terminal cord assembly for short or open

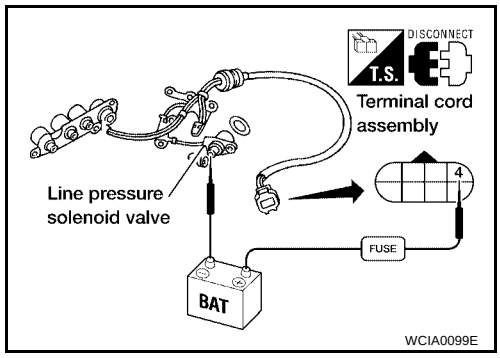

OK or NG

OK >> GO TO 3.
NG >> Repair or replace damaged parts.

3. CHECK POWER SOURCE AND DROPPING RESISTOR CIRCUIT

1. Turn ignition switch to OFF position.
2. Disconnect TCM harness connector.
3. Check resistance between terminal cord assembly harness connector F30 terminal 4 (G/R) and TCM harness connector E142 terminal 2 (W/B).

Resistance :12Ω (Approx.)

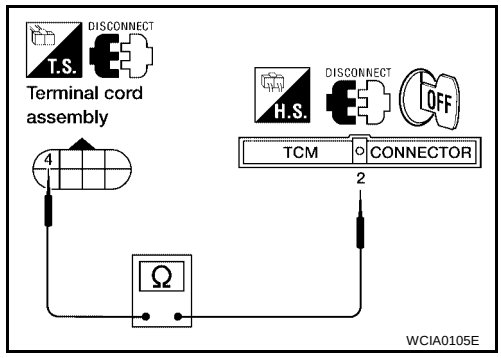

OK or NG

OK >> GO TO 5.
NG >> GO TO 4.

4. DETECT MALFUNCTIONING ITEM

Check the following items:

- Dropping resistor
- Check resistance between two terminals.

Resistance :12Ω (Approx.)

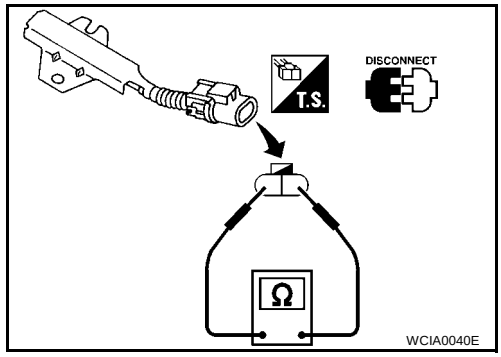

- Harness for short or open between TCM harness connector E142 terminal 2 (W/B) and terminal cord assembly F30 terminal 4 (G/R)

OK or NG

OK >> GO TO 5.
NG >> Repair or replace damaged parts.

5. CHECK POWER SOURCE CIRCUIT

1. Turn ignition switch to OFF position.
2. Check continuity between terminal cord assembly harness connector F30 terminal 4(G/R) and TCM harness connector E142 terminal 1(G/R). Refer to AT-164, "Wiring Diagram — AT — LPSV" .

Continuity should exist.

3. Reinstall any part removed.

OK or NG

OK >> GO TO 6.
NG >> Repair open circuit or short to ground or short to power in harness or connectors.

6. CHECK DTC

Perform AT-162, "Diagnostic Trouble Code (DTC) Confirmation Procedure" .

OK or NG

OK >> **INSPECTION END**
NG >> GO TO 7.

7. CHECK TCM INSPECTION

1. Perform TCM input/output signal inspection. Refer to AT-96, "TCM Terminals and Reference Value" .
2. If NG, recheck TCM pin terminals for damage or loose connection with harness connector.

OK or NG

OK >> **INSPECTION END**
NG >> Repair or replace damaged parts.

DTC P0750 SHIFT SOLENOID VALVE A

PFP:31940

Description

UCS000P0

Shift solenoid valves A and B are turned ON or OFF by the TCM in response to signals sent from the park/neutral position (PNP) switch, vehicle speed and ECM (throttle opening). Gears will then be shifted to the optimum position.

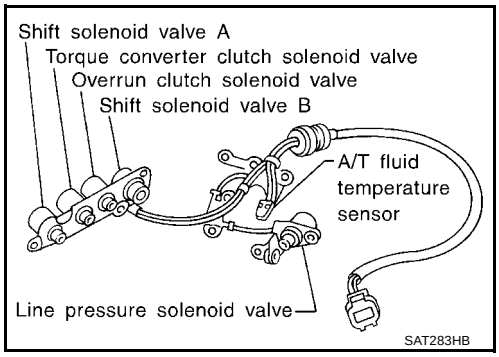

Gear position	1	2	3	4
Shift solenoid valve A	ON (Closed)	OFF (Open)	OFF (Open)	ON (Closed)
Shift solenoid valve B	ON (Closed)	ON (Closed)	OFF (Open)	OFF (Open)

On Board Diagnosis Logic

UCS000P1

Diagnostic trouble code “SFT SOL A/CIRC” with CONSULT-II or P0750 without CONSULT-II is detected when TCM detects an improper voltage drop when it tries to operate the solenoid valve.

Possible Cause

UCS000P2

Check the following items.

- Harness or connectors
  (The solenoid circuit is open or shorted.)
- Shift solenoid valve A

Diagnostic Trouble Code (DTC) Confirmation Procedure

UCS000P3

CAUTION:
Always drive vehicle at a safe speed.

NOTE:
If “DTC Confirmation Procedure” has been previously conducted, always turn ignition switch OFF and wait at least 10 seconds before conducting the next test.
After the repair, perform the following procedure to confirm the malfunction is eliminated.

WITH CONSULT-II

1. Turn ignition switch ON and select “DATA MONITOR” mode for “ENGINE” with CONSULT-II.

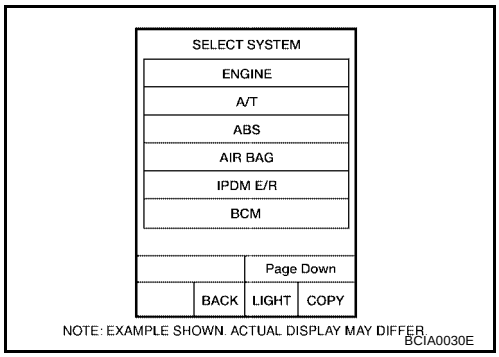

2. Start engine.
3. Drive vehicle in D position and allow the transmission to shift 1 → 2 (“GEAR”).

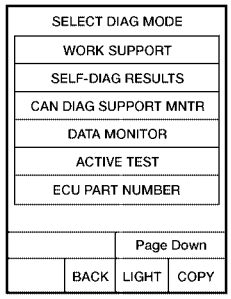

NOTE: EXAMPLE SHOWN. ACTUAL DISPLAY MAY DIFFER.
BCIA0031E

WITH GST

Follow the procedure “With CONSULT-II”.

Wiring Diagram — AT — SSV/A

UCS000P4

AT-SSV/A-01

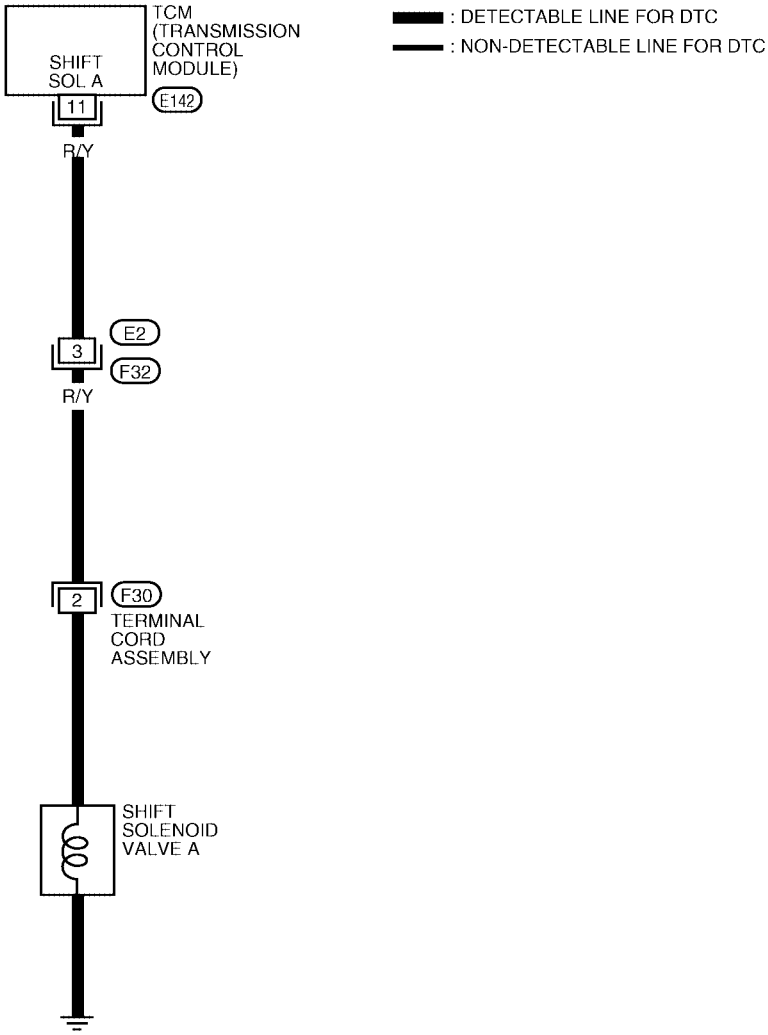

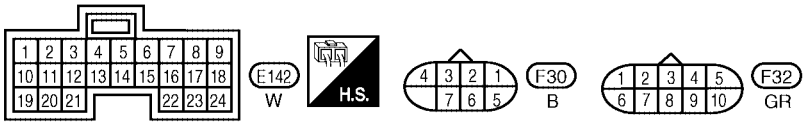

BCWA0181E

TCM TERMINALS AND REFERENCE VALUE (MEASURED BETWEEN EACH TERMINAL AND GROUND)				
TERMINAL	WIRE COLOR	ITEM	CONDITION	DATA (APPROX.)
11	R/Y	SHIFT SOLENOID VALVE A	WHEN SHIFT SOLENOID VALVE A IS OPERATING (DRIVING IN D_1 OR D_4)	BATTERY VOLTAGE
			WHEN SHIFT SOLENOID VALVE A IS NOT OPERATING (DRIVING IN D_2 OR D_3)	0V

Diagnostic Procedure

UCS000P5

1. CHECK VALVE RESISTANCE

1. Turn ignition switch to OFF position.
2. Disconnect terminal cord assembly connector in engine compartment.
3. Check resistance between terminal cord assembly harness connector F30 terminal 2 and ground.

Resistance : 20 - 30Ω

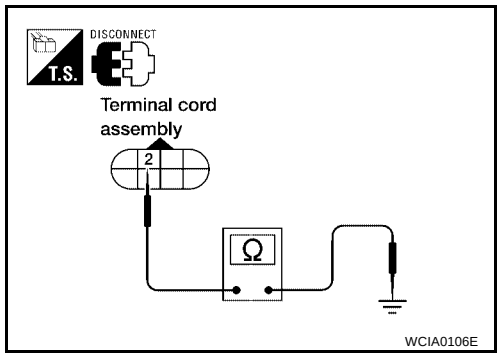

OK or NG

OK >> GO TO 3.
NG >> GO TO 2.

2. CHECK VALVE OPERATION

1. Remove control valve assembly. Refer to AT-253, "Control Valve Assembly and Accumulators" .
2. Check the following items:

– Shift solenoid valve A
– Operation check
• Check solenoid valve by listening for its operating sound while applying battery voltage to the terminal and ground.
– Harness of terminal cord assembly for short or open

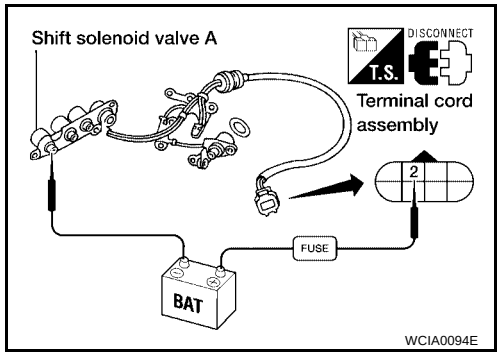

OK or NG

OK >> GO TO 3.
NG >> Repair or replace damaged parts.

3. CHECK POWER SOURCE CIRCUIT

1. Turn ignition switch to OFF position.
2. Disconnect TCM harness connector.
3. Check continuity between terminal cord assembly harness connector F30 terminal 2 (R/Y) and TCM harness connector E142 terminal 11 (R/Y). Refer to AT-170, "Wiring Diagram — AT — SSV/A" .

Continuity should exist.

4. Reinstall any part removed.

OK or NG

OK >> GO TO 4.
NG >> Repair open circuit or short to ground or short to power in harness or connectors.

4. CHECK DTC

Perform AT-168, "Diagnostic Trouble Code (DTC) Confirmation Procedure" .

OK or NG

OK >> **INSPECTION END**
NG >> GO TO 5.

5. CHECK TCM INSPECTION

1. Perform TCM input/output signal inspection. Refer to AT-96, "TCM Terminals and Reference Value" .
2. If NG, recheck TCM pin terminals for damage or loose connection with harness connector.

OK or NG

OK >> **INSPECTION END**
NG >> Repair or replace damaged parts.

DTC P0755 SHIFT SOLENOID VALVE B

PFP:31940

Description

UCS000P6

Shift solenoid valves A and B are turned ON or OFF by the TCM in response to signals sent from the park/neutral position (PNP) switch, vehicle speed and ECM (throttle opening). Gears will then be shifted to the optimum position.

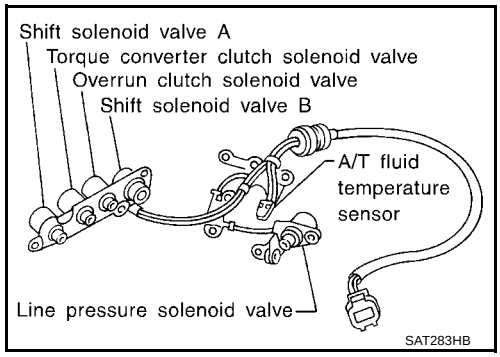

Gear position	1	2	3	4
Shift solenoid valve A	ON (Closed)	OFF (Open)	OFF (Open)	ON (Closed)
Shift solenoid valve B	ON (Closed)	ON (Closed)	OFF (Open)	OFF (Open)

On Board Diagnosis Logic

UCS000P7

Diagnostic trouble code “SFT SOL B/CIRC” with CONSULT-II or P0755 without CONSULT-II is detected when TCM detects an improper voltage drop when it tries to operate the solenoid valve.

Possible Cause

UCS000P8

Check the following items.

- Harness or connectors
  (The solenoid circuit is open or shorted.)
- Shift solenoid valve B

Diagnostic Trouble Code (DTC) Confirmation Procedure

UCS000P9

CAUTION:
Always drive vehicle at a safe speed.

NOTE:
If “DTC Confirmation Procedure” has been previously conducted, always turn ignition switch OFF and wait at least 10 seconds before conducting the next test.
After the repair, perform the following procedure to confirm the malfunction is eliminated.

WITH CONSULT-II

1. Turn ignition switch ON and select “DATA MONITOR” mode for “ENGINE” with CONSULT-II.

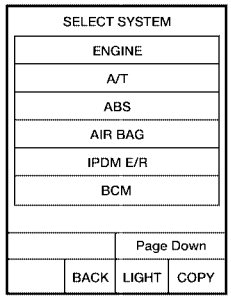

NOTE: EXAMPLE SHOWN. ACTUAL DISPLAY MAY DIFFER
BCIA0030E

2. Start engine.
3. Drive vehicle in D position and allow the transmission to shift 1 → 2 → 3 ("GEAR").

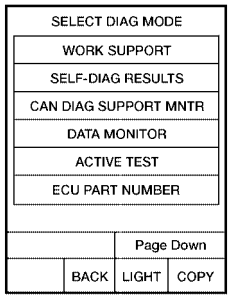

NOTE: EXAMPLE SHOWN. ACTUAL DISPLAY MAY DIFFER.
BCIA0031E

WITH GST

Follow the procedure "With CONSULT-II".

Wiring Diagram — AT — SSV/B

UCS000PA

AT-SSV/B-01

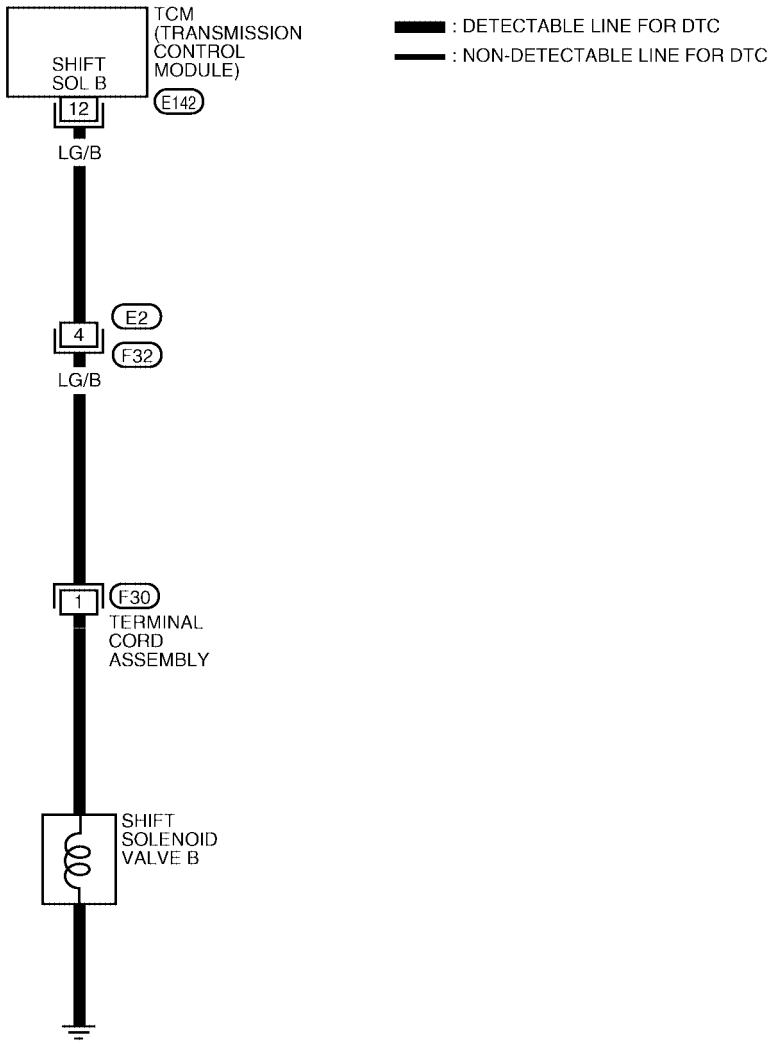

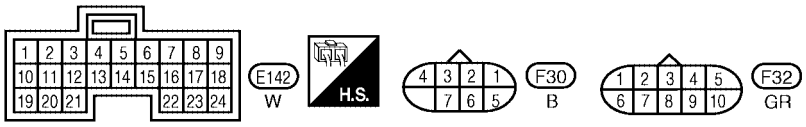

BCWA0182E

TCM TERMINALS AND REFERENCE VALUE (MEASURED BETWEEN EACH TERMINAL AND GROUND)				
TERMINAL	WIRE COLOR	ITEM	CONDITION	DATA (APPROX.)
12	LG/B	SHIFT SOLENOID VALVE B	WHEN SHIFT SOLENOID VALVE B IS OPERATING (DRIVING IN D_1 OR D_2)	BATTERY VOLTAGE
			WHEN SHIFT SOLENOID VALVE BE IS NOT OPERATING (DRIVING IN D_3 OR D_4)	0V

Diagnostic Procedure

UCS000PB

1. CHECK VALVE RESISTANCE

1. Turn ignition switch to OFF position.
2. Disconnect terminal cord assembly connector in engine compartment.
3. Check resistance between terminal cord assembly harness connector F30 terminal 1 and ground.

Resistance : 5 - 20Ω

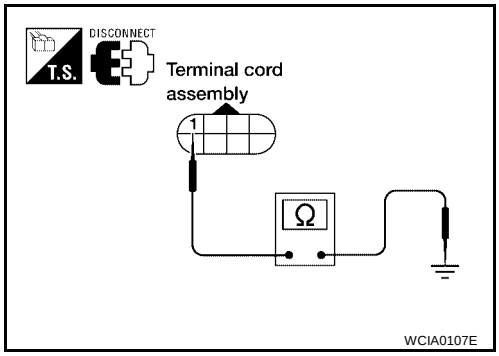

OK or NG

OK >> GO TO 3.
NG >> GO TO 2.

2. CHECK VALVE OPERATION

1. Remove control valve assembly. Refer to AT-253, "Control Valve Assembly and Accumulators" .
2. Check the following items:

– Shift solenoid valve B
– Operation check

• Check solenoid valve by listening for its operating sound while applying battery voltage to the terminal and ground.

– Harness of terminal cord assembly for short or open

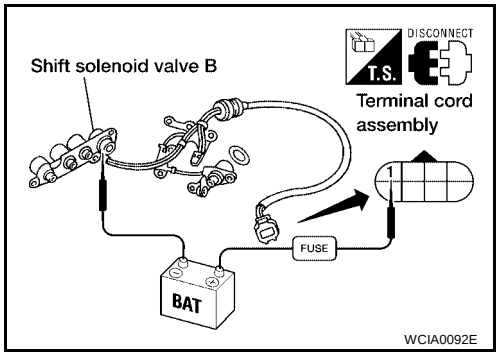

OK or NG

OK >> GO TO 3.
NG >> Repair or replace damaged parts.

3. CHECK POWER SOURCE CIRCUIT

1. Turn ignition switch to OFF position.
2. Disconnect TCM harness connector.
3. Check continuity between terminal cord harness connector F30 terminal 1(LG/B) and TCM harness connector E142 terminal 12 (LG/B). Refer to AT-175, "Wiring Diagram — AT — SSV/B" .

Continuity should exist.

4. Reinstall any part removed.

OK or NG

OK >> GO TO 4.
NG >> Repair open circuit or short to ground or short to power in harness or connectors.

4. CHECK DTC

Perform AT-173, "Diagnostic Trouble Code (DTC) Confirmation Procedure" .

OK or NG

OK >> **INSPECTION END**
NG >> GO TO 5.

5. CHECK TCM INSPECTION

1. Perform TCM input/output signal inspection. Refer to AT-96, "TCM Terminals and Reference Value" .
2. If NG, recheck TCM pin terminals for damage or loose connection with harness connector.

OK or NG

OK >> **INSPECTION END**
NG >> Repair or replace damaged parts.

DTC P1705 THROTTLE POSITION SENSOR [ACCELERATOR PEDAL POSITION (APP) SENSOR]

PFP:22560

Description

UCS000PC

The accelerator pedal position (APP) sensor is part of the system that controls throttle position. This system also uses an electric throttle control actuator, which consists of a throttle control motor and throttle position sensors. Accelerator pedal position signal is sent to the ECM.

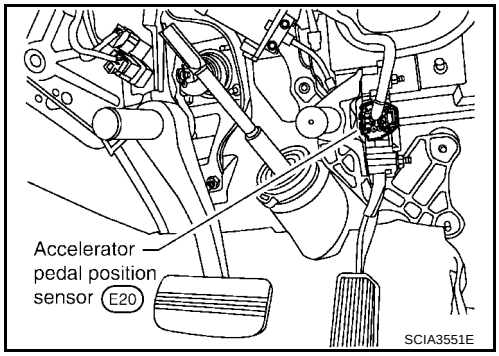

CONSULT-II REFERENCE VALUE IN DATA MONITOR MODE

Remarks: Specification data are reference values.

Monitor item	Condition	Specification
THRTL POS SEN	Fully-closed throttle	Approximately 0.5V
	Fully-open throttle	Approximately 4V

On Board Diagnosis Logic

UCS000PD

Diagnostic trouble code TP SEN/CIRC A/T with CONSULT-II or P1705 without CONSULT-II is detected when TCM receives an excessively low or high voltage from the ECM.

Possible Cause

UCS000PE

Harness or connectors
(The sensor circuit is open or shorted.)

Diagnostic Trouble Code (DTC) Confirmation Procedure

UCS000PF

CAUTION:
Always drive vehicle at a safe speed.

NOTE:
If "DTC Confirmation Procedure" has been previously conducted, always turn ignition switch OFF and wait at least 10 seconds before conducting the next test.
After the repair, perform the following procedure to confirm the malfunction is eliminated.

WITH CONSULT-II

1. Turn ignition switch ON and select "DATA MONITOR" mode for "A/T" with CONSULT-II.

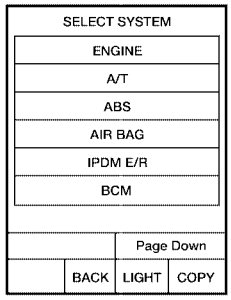

NOTE: EXAMPLE SHOWN. ACTUAL DISPLAY MAY DIFFER
BCIA0030E

2. Touch "SELECTION FROM MENU".
3. Touch "THRTL POS SEN".
   Touch "START"

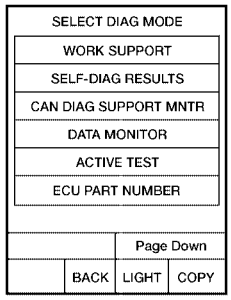

NOTE: EXAMPLE SHOWN. ACTUAL DISPLAY MAY DIFFER
BCIA0031E

Accelerator pedal condition	THRTL POS SEN
Fully released	Approx. 0.5V
Partially depressed	0.5 - 4V
Fully depressed	Approx. 4V

If the check result is NG, go to AT-182, "Diagnostic Procedure" .
If the check result is OK, go to following step.

4. Turn ignition switch ON and select "DATA MONITOR" mode for "ENGINE" with CONSULT-II.
5. Touch "SELECTION FROM MENU"
6. Touch "VHCL SPEED SE" and "THRTL SEN 1".
   Touch "START".
7. Start engine and maintain the following conditions for at least 3 consecutive seconds. Then release accelerator pedal completely.
   VHCL SPEED SE: 10 km/h (6 MPH) or more
   THRTL POS 1: Approximately 3V or less
   Selector lever: D position
   If the check result is NG, go to AT-182, "Diagnostic Procedure" .
   If the check result is OK, go to following step.

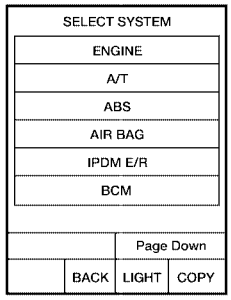

NOTE: EXAMPLE SHOWN. ACTUAL DISPLAY MAY DIFFER
BCIA0030E

8. Maintain the following conditions for at least 3 consecutive seconds. Then release accelerator pedal completely.
   VHCL SPEED SE: 10 km/h (6 MPH) or more
   Accelerator pedal: Wide open throttle
   Selector lever: D position

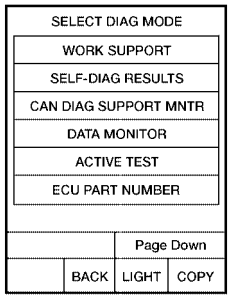

NOTE: EXAMPLE SHOWN. ACTUAL DISPLAY MAY DIFFER.
BCIA0031E

WITH GST

Follow the procedure “With CONSULT-II”.

Wiring Diagram — AT — TPS

UCS000PG

AT-TPS-01

: DETECTABLE LINE FOR DTC
: NON-DETECTABLE LINE FOR DTC

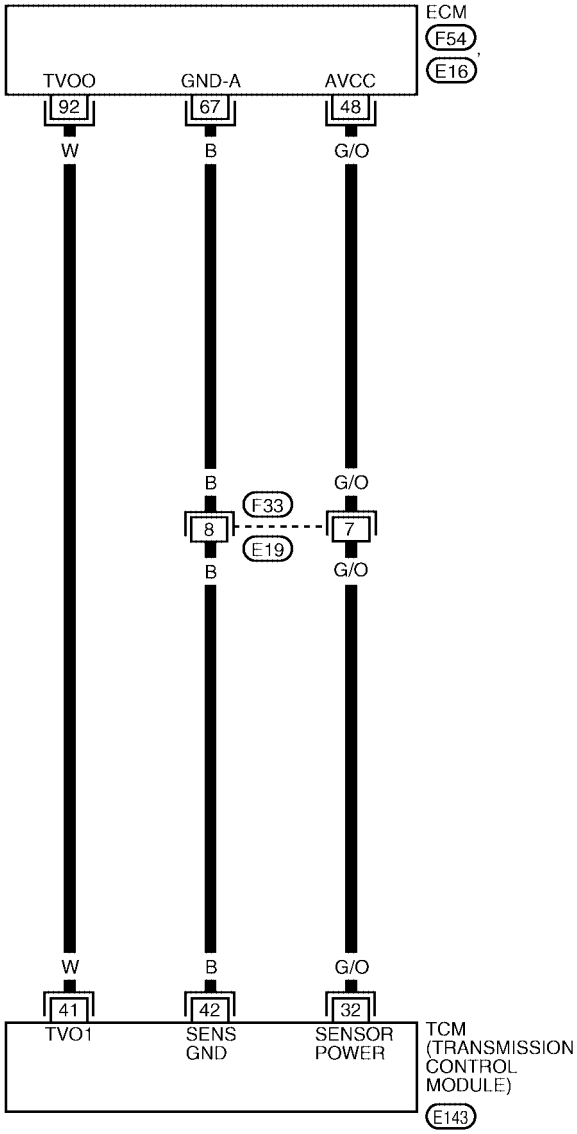

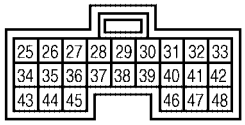

E143
GR

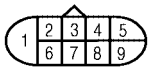

F33
GR

REFER TO THE FOLLOWING.
E16 , F54 - ELECTRICAL UNITS

BCWA0183E

TCM TERMINALS AND REFERENCE VALUE (MEASURED BETWEEN EACH TERMINAL AND GROUND)

TERMINAL	WIRE COLOR	ITEM	CONDITION	DATA (APPROX.)
32	G/O	SENSOR POWER	IGNITION SWITCH ON	4.5 -5.5V
			IGNITION SWITCH OFF	0V
41	W	ACCELERATOR PEDAL POSITION (APP) SENSOR	IGNITION ON AND ACCELERATOR PEDAL IS DEPRESSED SLOWLY AFTER WARMING UP ENGINE	FULLY CLOSED THROTTLE: 0.5V FULLY OPEN THROTTLE: 4V
42	B	SENSOR GROUND	Always	0V

Diagnostic Procedure

UCS000PH

1. CHECK DTC WITH ECM

- Check P code with CONSULT-II “ENGINE”.
  Turn ignition switch ON and select “SELF DIAGNOSTIC RESULTS” mode for “ENGINE” with CONSULT-II.

Refer to EC-71, "Malfunction Indicator Lamp (MIL)" .

OK or NG

OK (with CONSULT-II)>> GO TO 2.
OK (without CONSULT-II)>> GO TO 3.
NG >> Check accelerator pedal position (APP) sensor circuit for engine control. Refer to EC-617, "DTC P2122, P2123 APP SENSOR" , EC-624, "DTC P2127, P2128 APP SENSOR" , EC-638, "DTC P2138 APP SENSOR" .

2. CHECK INPUT SIGNAL (WITH CONSULT-II)

With CONSULT-II

1. Turn ignition switch to ON position. (Do not start engine.)
2. Select “DATA MONITOR” mode for “A/T” with CONSULT-II.
3. Read out the value of “THRTL POS SEN”.

Voltage:

Fully-closed throttle :Approximately 0.5V

Fully-open throttle :Approximately 4V

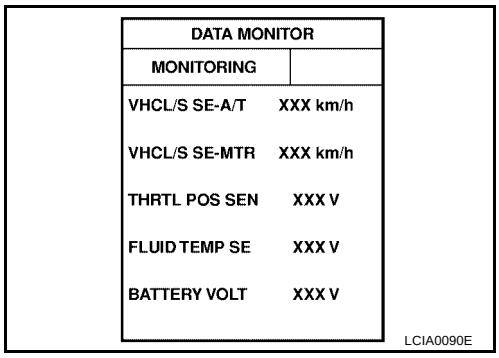

OK or NG

OK >> GO TO 4.
NG >> Check harness for short or open between ECM and TCM regarding accelerator pedal position signal circuit.

3. CHECK INPUT SIGNAL (WITHOUT CONSULT-II)

Without CONSULT-II

1. Turn ignition switch to ON position. (Do not start engine.)
2. Check voltage between TCM harness connector E143 terminals 41 (W) and 42 (B) while accelerator pedal is depressed slowly.

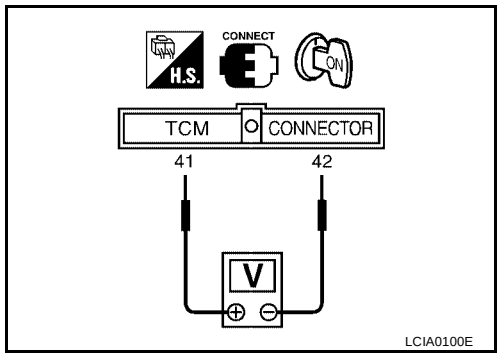

Voltage:

Fully-closed throttle valve : Approximately 0.5V

Fully-open throttle valve : Approximately 4V

(Voltage rises gradually in response to throttle position.)

OK or NG

OK >> GO TO 4.
NG >> Check harness for short or open between ECM and TCM regarding accelerator pedal position signal circuit.

4. CHECK TCM INSPECTION

1. Perform TCM input/output signal inspection. Refer to AT-96, "TCM Terminals and Reference Value" .
2. If NG, recheck TCM pin terminals for damage or loose connection with harness connector.

OK or NG

OK >> **INSPECTION END**
NG >> Repair or replace damaged parts.

DTC P1760 OVERRUN CLUTCH SOLENOID VALVE

PFP:31940

Description

UCS000PI

The overrun clutch solenoid valve is activated by the TCM in response to signals sent from the park/neutral position (PNP) switch, overdrive control switch, vehicle speed and ECM (throttle opening). The overrun clutch operation will then be controlled.

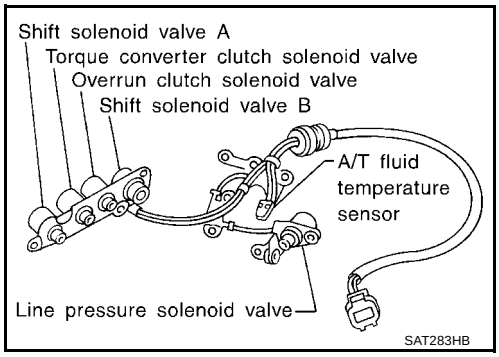

On Board Diagnosis Logic

UCS000PJ

Diagnostic trouble code “O/R CLTCH SOL/CIRC” with CONSULT-II or P1760 without CONSULT-II is detected when TCM detects an improper voltage drop when it tries to operate the solenoid valve.

Possible Cause

UCS000PK

Check the following items.

- Harness or connectors
  (The solenoid circuit is open or shorted.)
- Overrun clutch solenoid valve

Diagnostic Trouble Code (DTC) Confirmation Procedure

UCS000PL

CAUTION:
Always drive vehicle at a safe speed.

NOTE:
If “DTC Confirmation Procedure” has been previously conducted, always turn ignition switch OFF and wait at least 10 seconds before conducting the next test.
TESTING CONDITION:
Always drive vehicle on a level road to improve accuracy of test.
After the repair, perform the following procedure to confirm the malfunction is eliminated.

WITH CONSULT-II

1. Turn ignition switch ON and select “DATA MONITOR” mode for “A/T” with CONSULT-II.
2. Start engine.
3. Accelerate vehicle to a speed of more than 10 km/h (6 MPH) with selector lever in D position.

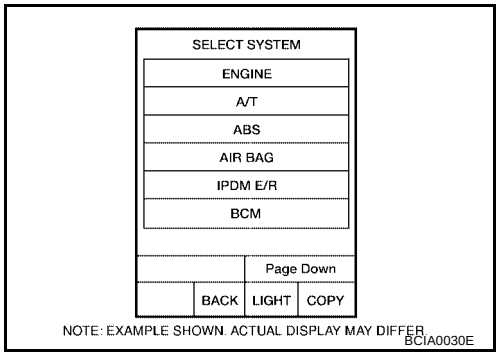

4. Release accelerator pedal completely with selector lever in 3 position.

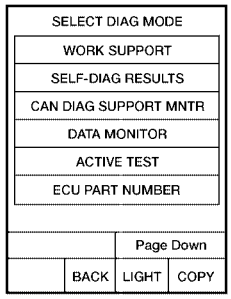

NOTE: EXAMPLE SHOWN. ACTUAL DISPLAY MAY DIFFER.
BCIA0031E

WITH GST

Follow the procedure “With CONSULT-II”.

Wiring Diagram — AT — OVRCSV

UCS000PM

AT-OVRCSV-01

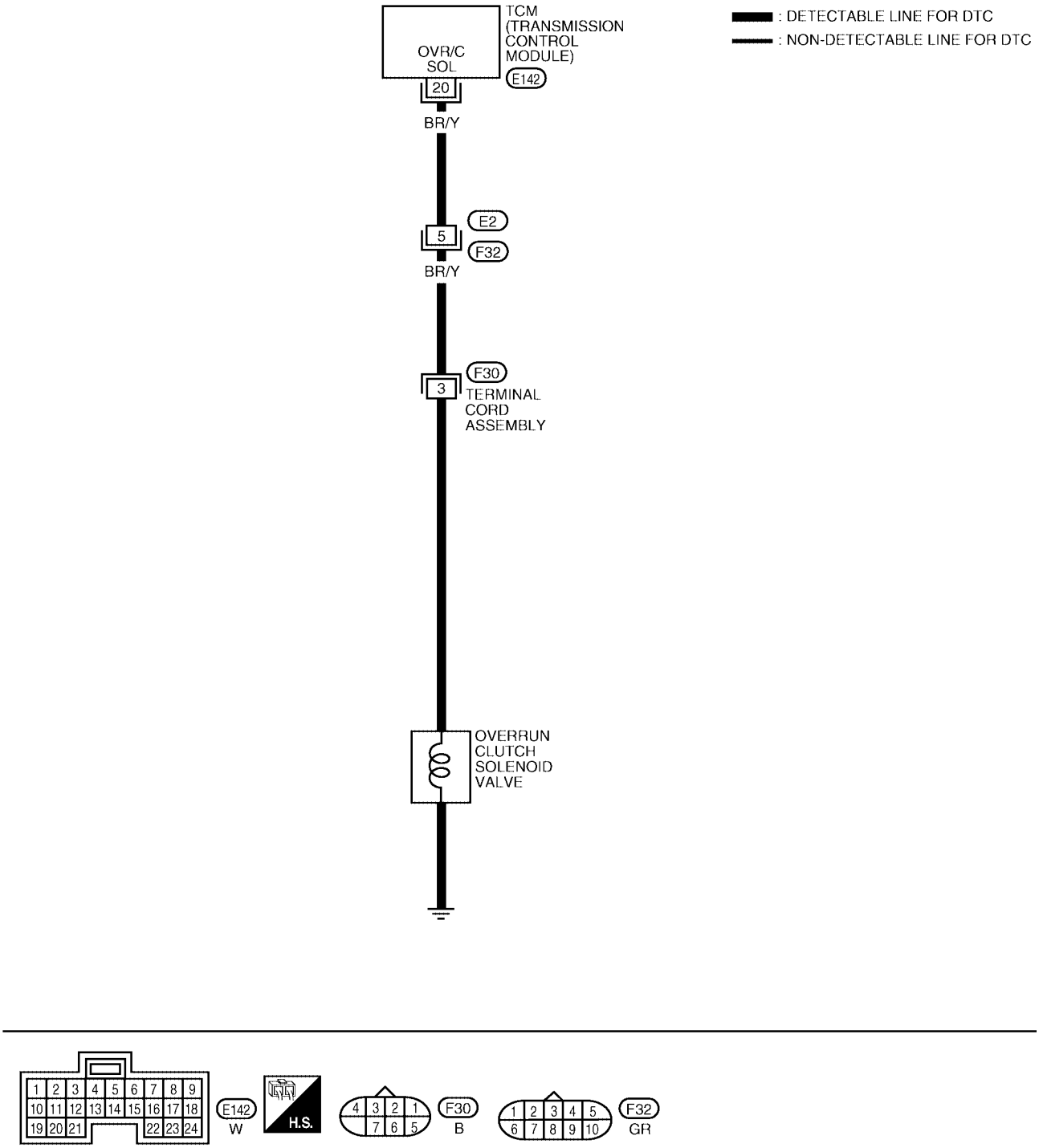

BCWA0184E

TCM TERMINALS AND REFERENCE VALUE (MEASURED BETWEEN EACH TERMINAL AND GROUND)				
TERMINAL	WIRE COLOR	ITEM	CONDITION	DATA (APPROX.)
20	BR/Y	OVERRUN CLUTCH SOLENOID VALVE	WHEN OVERRUN CLUTCH SOLENOID VALVE OPERATES	BATTERY VOLTAGE
			WHEN OVERRUN CLUTCH SOLENOID VALVE DOES NOT OPERATE	0V

Diagnostic Procedure

UCS000PN

1. CHECK VALVE RESISTANCE

1. Turn ignition switch to OFF position.
2. Disconnect terminal cord assembly connector in engine compartment.
3. Check resistance between terminal cord assembly F30 terminal 3 and ground.

Resistance : 20 - 30Ω

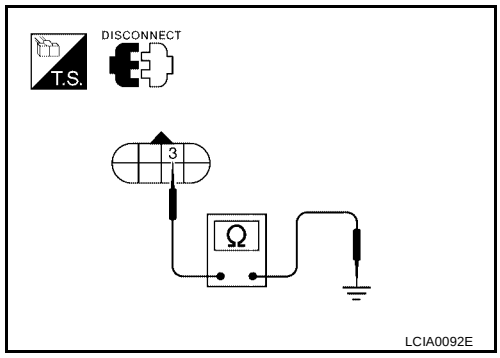

OK or NG

OK >> GO TO 3.
NG >> GO TO 2.

2. CHECK VALVE OPERATION

1. Remove control valve assembly. Refer to AT-253, "Control Valve Assembly and Accumulators" .
2. Check the following items:

– Overrun clutch solenoid valve
– Operation check
• Check solenoid valve by listening for its operating sound while applying battery voltage to the terminal and ground.
– Harness of terminal cord assembly for short or open

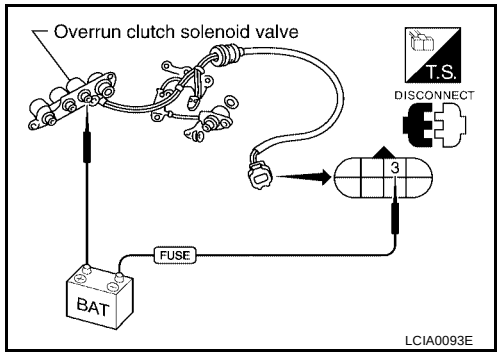

OK or NG

OK >> GO TO 3.
NG >> Repair or replace damaged parts.

3. CHECK POWER SOURCE CIRCUIT

1. Turn ignition switch to OFF position.
2. Disconnect TCM harness connector.
3. Check continuity between terminal cord assembly harness connector F30 terminal 3 (BR/Y) and TCM harness connector E142 terminal 20 (BR/Y). Refer to AT-186, "Wiring Diagram — AT — OVRCSV" .

Continuity should exist.

4. Reinstall any part removed.

OK or NG

OK >> GO TO 4.
NG >> Repair open circuit or short to ground or short to power in harness or connectors.

4. CHECK DTC

Perform AT-184, "Diagnostic Trouble Code (DTC) Confirmation Procedure" .

OK or NG

OK >> **INSPECTION END**
NG >> GO TO 5.

5. CHECK TCM INSPECTION

1. Perform TCM input/output signal inspection. Refer to AT-96, "TCM Terminals and Reference Value" .
2. If NG, recheck TCM pin terminals for damage or loose connection with harness connector.

OK or NG

OK >> **INSPECTION END**
NG >> Repair or replace damaged parts.

DTC BATT/FLUID TEMP SEN (A/T FLUID TEMP SENSOR CIRCUIT AND TCM POWER SOURCE)

PFP:31940

Description

UCS000PU

The A/T fluid temperature sensor detects the A/T fluid temperature and sends a signal to the TCM.

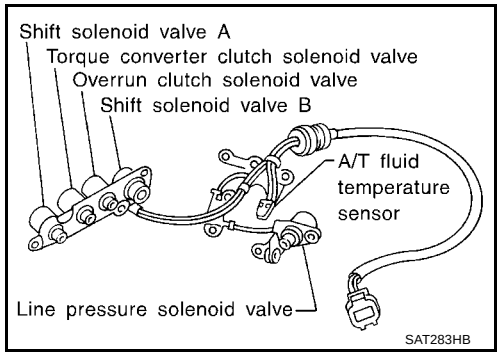

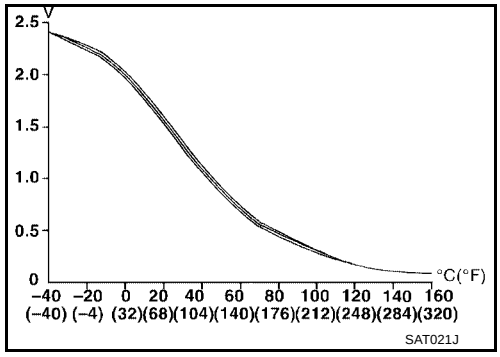

CONSULT-II REFERENCE VALUE IN DATA MONITOR MODE

Remarks: Specification data are reference values.

Monitor item	Condition	Specification (Approximately)
FLUID TEMP SE [V]	Cold [20°C (68°F)] ↓ Hot [80°C (176°F)]	1.5V ↓ 0.5V

On Board Diagnosis Logic

UCS000PV

Diagnostic trouble code “BATT/FLUID TEMP SEN” with CONSULT-II or 8th judgement flicker without CONSULT-II is detected when TCM receives an excessively low or high voltage from the sensor.

Possible Cause

UCS000PW

Check the following items.

- Harness or connectors
  (The sensor circuit is open or shorted.)
- A/T fluid temperature sensor

Diagnostic Trouble Code (DTC) Confirmation Procedure

UCS000PX

After the repair, perform the following procedure to confirm the malfunction is eliminated.

WITH CONSULT-II

1. Start engine.

2. Select “DATA MONITOR” mode for “A/T” with CONSULT-II.

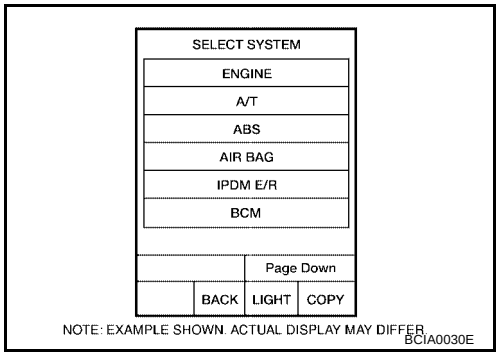

3. Drive vehicle under the following conditions:
   Selector lever in D, vehicle speed higher than 20 km/h (12 MPH).

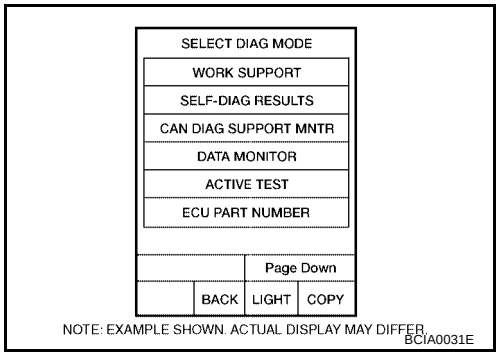

WITHOUT CONSULT-II

1. Start engine.
2. Drive vehicle under the following conditions:
   Selector lever in D, vehicle speed higher than 20 km/h (12 MPH).
3. Perform self-diagnosis.
   Refer to AT-54, "TCM SELF-DIAGNOSTIC PROCEDURE (NO TOOLS)" .

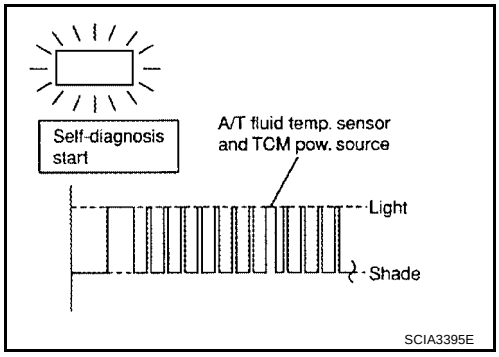

Wiring Diagram — AT — BA/FTS

UCS000PY

AT-BA/FTS-01

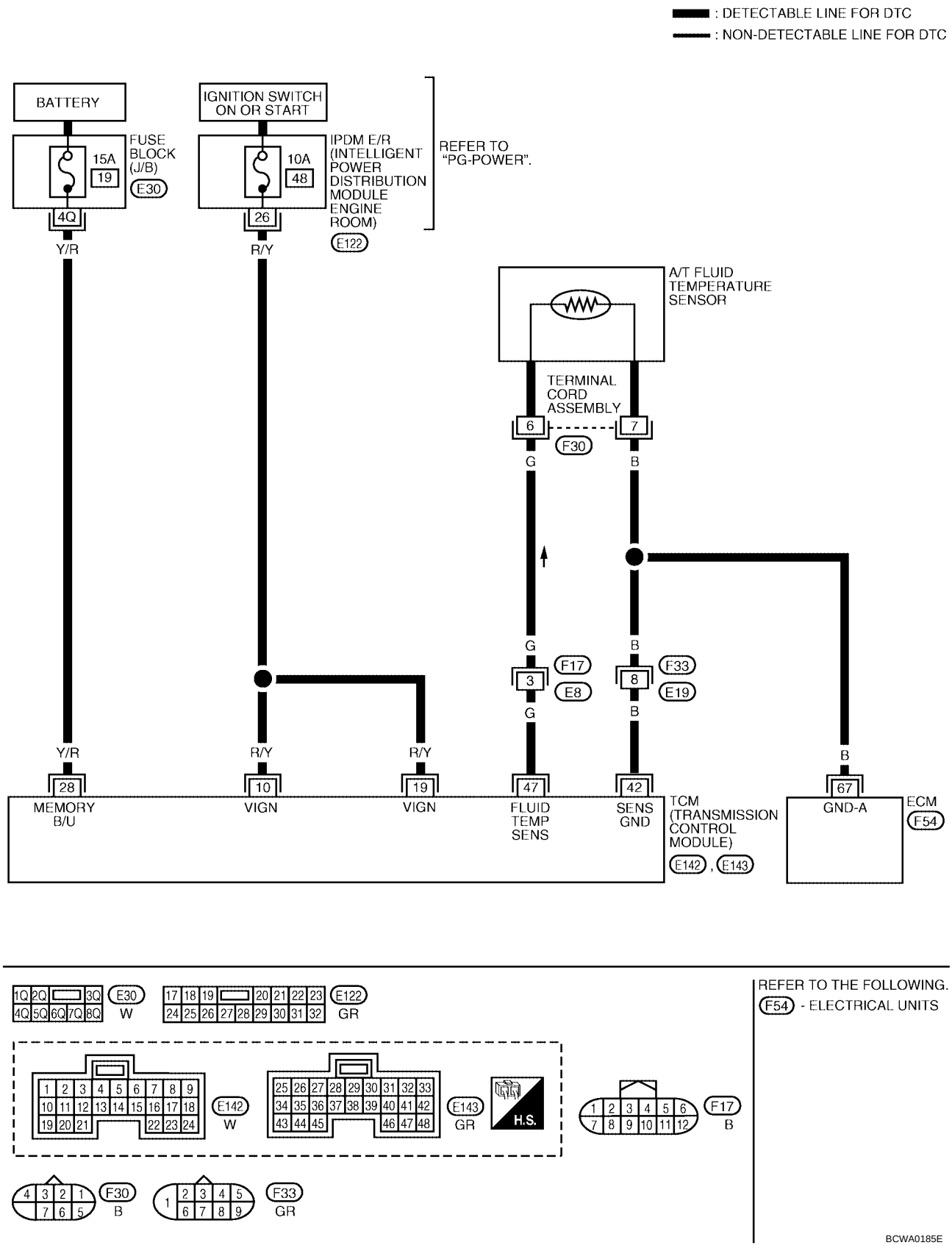

TCM TERMINALS AND REFERENCE VALUE (MEASURED BETWEEN EACH TERMINAL AND GROUND)

TERMINAL	WIRE COLOR	ITEM	CONDITION	DATA (APPROX.)
10	R/Y	POWER SOURCE	IGNITION ON	BATTERY VOLTAGE
			IGNITION OFF	0V
19	R/Y	POWER SOURCE	IGNITION ON	BATTERY VOLTAGE
			IGNITION OFF	0V
28	Y/R	POWER SOURCE (MEMORY BACKUP)	Always	BATTERY VOLTAGE
42	B	SENSOR GROUND	Always	0V
47	G	A/T FLUID TEMPERATURE SENSOR	IGNITION ON WITH ATF TEMPERATURE AT 20°C (68°F)	1.5V
			IGNITION ON WITH ATF TEMPERATURE AT 80°C (176°F)	0.5V

Diagnostic Procedure

UCS000PZ

1. INSPECTION START

Do you have CONSULT-II?

Yes or No

Yes >> GO TO 2.
No >> GO TO 9.

2. CHECK INPUT SIGNAL OF A/T FLUID TEMPERATURE SENSOR (WITH CONSULT-II)

With CONSULT-II

1. Start engine.
2. Select “DATA MONITOR” mode for “A/T” with CONSULT-II.
3. Read out the value of “FLUID TEMP SE”.

Voltage :Cold [20°C (68°F)] → Hot [80°C (176°F)]
:Approximately 1.5V → 0.5V

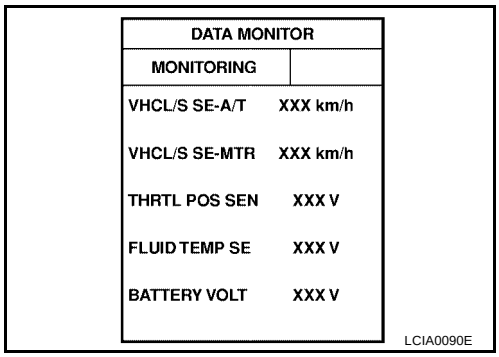

OK or NG

OK >> GO TO 10.
NG >> GO TO 3.

3. DETECT MALFUNCTIONING ITEM

Check the following items:

- Harness for short or open between TCM, ECM and terminal cord assembly
- Ground circuit for ECM
  Refer to EC-141, "POWER SUPPLY AND GROUND CIRCUIT" .

OK or NG

OK >> GO TO 4.
NG >> Repair or replace damaged parts.

4. CHECK TCM POWER SOURCE STEP 1

1. Turn ignition switch to ON position. (Do not start engine.)
2. Check voltage between TCM harness connectors E142, E143 terminals 10 (R/Y), 19 (R/Y), 28 (Y/R) and ground.

Voltage : Battery voltage

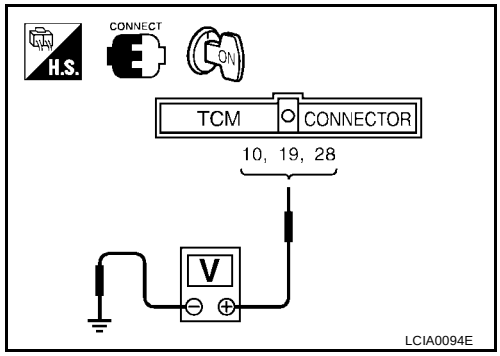

OK or NG

OK >> GO TO 5.
NG >> GO TO 6.

5. CHECK TCM POWER SOURCE STEP 2

1. Turn ignition switch to OFF position.
2. Check voltage between TCM harness connector E143 terminal 28 (Y/R) and ground.

Voltage : Battery voltage

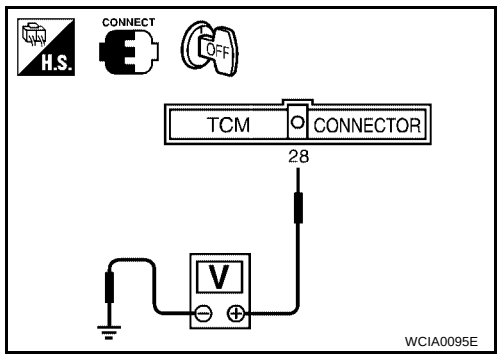

OK or NG

OK >> GO TO 7.
NG >> GO TO 6.

6. DETECT MALFUNCTIONING ITEM

Check the following items:

- Harness for short or open between battery, ignition switch and TCM
- Ignition switch and fuse
  Refer to PG-4, "POWER SUPPLY ROUTING CIRCUIT" .

OK or NG

OK >> GO TO 7.
NG >> Repair or replace damaged parts.

7. CHECK A/T FLUID TEMPERATURE SENSOR WITH TERMINAL CORD ASSEMBLY

1. Turn ignition switch to OFF position.
2. Disconnect terminal cord assembly connector in engine compartment.
3. Check resistance between terminal cord assembly F30 terminals 6 and 7 when A/T is cold.

Temperature	Resistance (Approx.)
Cold [20°C (68°F)]	2.5kΩ

4. Reinstall any part removed.

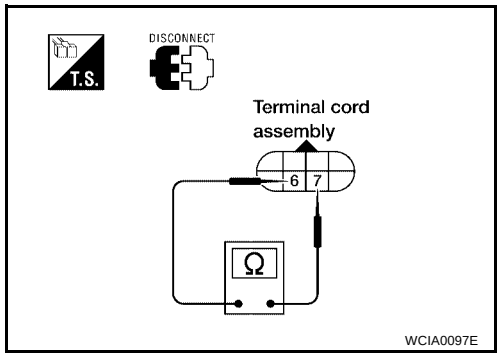

OK or NG

OK >> GO TO 10.
NG >> GO TO 8.

8. DETECT MALFUNCTIONING ITEM

1. Remove oil pan. Refer to AT-253, "Control Valve Assembly and Accumulators" .
2. Check the following items:

– A/T fluid temperature sensor

- Check resistance between two terminals while changing temperature as shown at below.

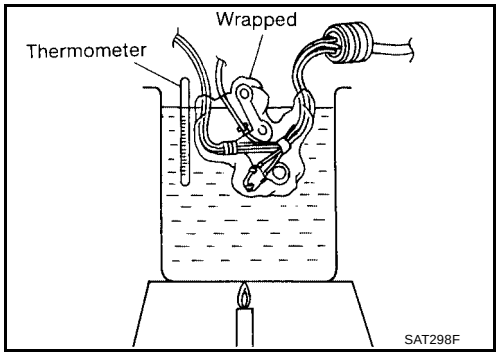

Temperature °C (°F)	Resistance (Approx.)
20 (68)	2.5kΩ
80 (176)	0.3kΩ

– Harness of terminal cord assembly for short or open

OK or NG

OK >> GO TO 10.
NG >> Repair or replace damaged parts.

9. CHECK INPUT SIGNAL OF A/T FLUID TEMPERATURE SENSOR (WITHOUT CONSULT-II)

Without CONSULT-II

1. Start engine.
2. Check voltage between TCM harness connector E143 terminal 47(G) and ground while warming up A/T.

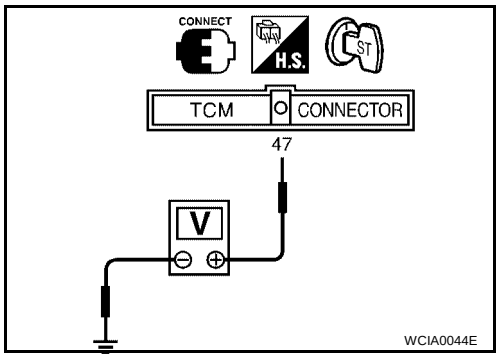

Temperature	Voltage (Approx.)
Cold [20°C (68°F)] → Hot [80°C (176°F)]	1.5V → 0.5V

3. Turn ignition switch to OFF position.
4. Disconnect TCM harness connector.
5. Check resistance between TCM harness connector E143 terminal 42 (B) and ground. Refer to AT-191, "Wiring Diagram — AT — BA/FTS" .

Continuity should exist.

OK or NG

OK >> GO TO 10.
NG >> GO TO 3.

10. CHECK DTC

Perform AT-189, "Diagnostic Trouble Code (DTC) Confirmation Procedure" .

OK or NG

OK >> **INSPECTION END**
NG >> GO TO 11.

11. CHECK TCM INSPECTION

1. Perform TCM input/output signal inspection. Refer to AT-96, "TCM Terminals and Reference Value" .
2. If NG, recheck TCM pin terminals for damage or loose connection with harness connector.

OK or NG

OK >> **INSPECTION END**
NG >> Repair or replace damaged parts.

DTC VEHICLE SPEED SENSOR MTR

PFP:24814

Description

UCS000Q0

The vehicle speed sensor·MTR is built into the speedometer assembly. The sensor functions as an auxiliary device to the revolution sensor when it is malfunctioning. The TCM will then use a signal sent from the vehicle speed sensor·MTR.

On Board Diagnosis Logic

UCS000Q1

Diagnostic trouble code “VHCL SPEED SEN·MTR” with CONSULT-II or 2nd judgement flicker without CONSULT-II is detected when TCM does not receive the proper voltage signal from the sensor.

Possible Cause

UCS000Q2

Check the following items.

- Harness or connectors
  (The sensor circuit is open or shorted.)
- Combination meter
- ABS actuator and electric unit (control unit)

Diagnostic Trouble Code (DTC) Confirmation Procedure

UCS000Q3

CAUTION:

- **Always drive vehicle at a safe speed.**
- **If conducting this “DTC Confirmation Procedure” again, always turn ignition switch OFF and wait at least 10 seconds before continuing.**

After the repair, perform the following procedure to confirm the malfunction is eliminated.

WITH CONSULT-II

1. Turn ignition switch ON and select “DATA MONITOR” mode for “A/T” with CONSULT-II.

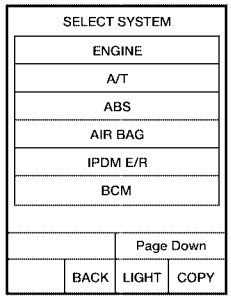

NOTE: EXAMPLE SHOWN. ACTUAL DISPLAY MAY DIFFER.
BCIA0030E

2. Start engine and accelerate vehicle from 0 to 25 km/h (0 to 16 MPH).

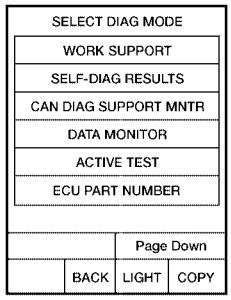

NOTE: EXAMPLE SHOWN. ACTUAL DISPLAY MAY DIFFER.
BCIA0031E

WITHOUT CONSULT-II

1. Start engine.
2. Drive vehicle under the following conditions:
   Selector lever in D and vehicle speed higher than 25 km/h (16 MPH).

3. Perform self-diagnosis.
   Refer to AT-54, "TCM SELF-DIAGNOSTIC PROCEDURE (NO TOOLS)" .

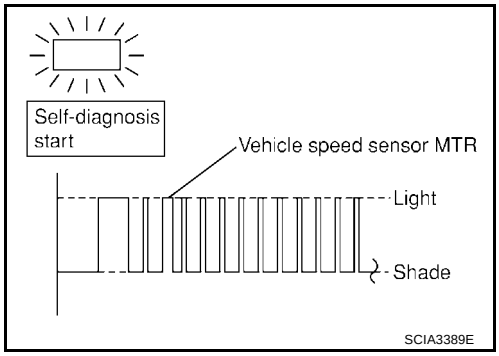

Wiring Diagram — AT — VSSMTR

UCS000Q4

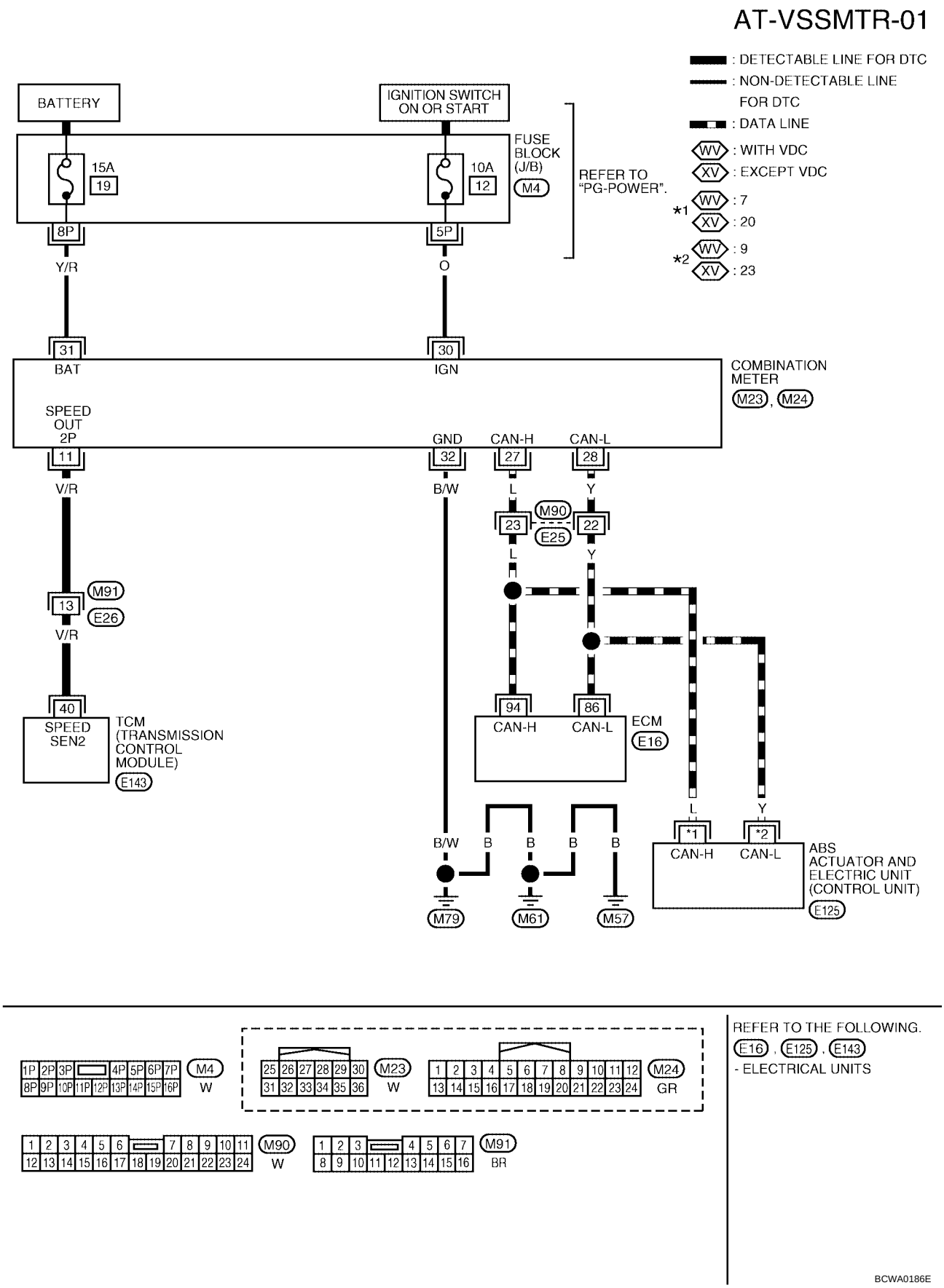

TCM TERMINALS AND REFERENCE VALUE (MEASURED BETWEEN EACH TERMINAL AND GROUND)				
TERMINAL	WIRE COLOR	ITEM	CONDITION	DATA (APPROX.)
40	V/R	VEHICLE SPEED SIGNAL	WHEN MOVING VEHICLE AT 2 TO 3 KM/H (1 TO 2 MPH) FOR 1 M (3 FT) OR MORE.	INTERMITTENTLY CHANGES BETWEEN APPROX. 0V AND APPROX. 4.5V

Diagnostic Procedure

UCS000Q5

1. CHECK INPUT SIGNAL

With CONSULT-II

1. Start engine.
2. Select “DATA MONITOR” mode for “A/T” with CONSULT-II.
3. Read out the value of “VHCL/S SE-MTR” while driving. Check the value changes according to driving speed.

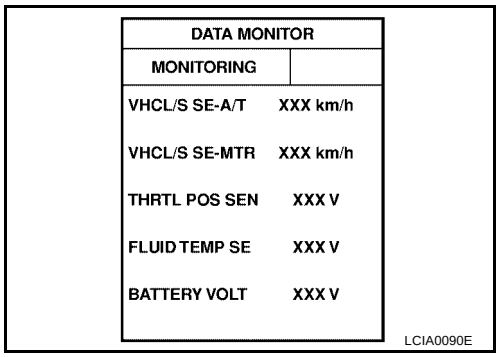

Without CONSULT-II

1. Start engine.
2. Check voltage between TCM harness connector E143 terminal 40 (V/R) and ground while driving at 2 to 3 km/h (1 to 2 MPH) for 1 m (3 ft) or more.

Voltage : Intermittently changes between approx. 0V and approx. 4.5V

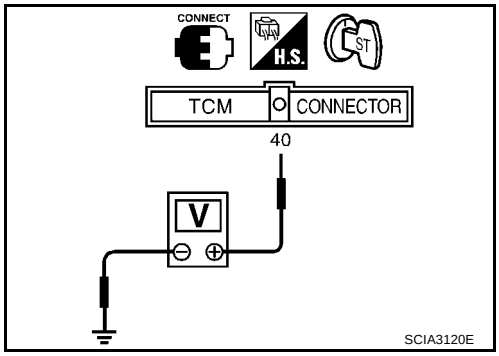

OK or NG

OK >> GO TO 3.
NG >> GO TO 2.

2. DETECT MALFUNCTIONING ITEM

Check the following items:

- Combination meter. Refer to DI-5, "COMBINATION METERS" .
- Harness for short or open between TCM and combination meter.
- ABS actuator and electric unit (control unit). Refer to BRC-11, "TROUBLE DIAGNOSIS" (without VDC) or BRC-55, "TROUBLE DIAGNOSIS" (with VDC).
- Harness for short or open between combination meter and ABS actuator and electric unit (control unit).

OK or NG

OK >> GO TO 3.
NG >> Repair or replace damaged parts.

3. CHECK DTC

Perform AT-195, "Diagnostic Trouble Code (DTC) Confirmation Procedure" .

OK or NG

OK >> **INSPECTION END**
NG >> GO TO 4.

4. CHECK TCM INSPECTION

1. Perform TCM input/output signal inspection. Refer to AT-96, "TCM Terminals and Reference Value" .
2. If NG, recheck TCM pin terminals for damage or loose connection with harness connector.

OK or NG

OK >> **INSPECTION END**
NG >> Repair or replace damaged parts.

DTC TURBINE REVOLUTION SENSOR

PFP:31935

Description

UCS000Q6

The turbine revolution sensor (power train revolution sensor) detects forward clutch drum rpm (revolutions per minute). It is located on the input side of the automatic transaxle. The vehicle speed sensor A/T (Revolution sensor) is located on the output side of the automatic transaxle. With the two sensors, input and output rpms are accurately detected. The result is optimal shift timing during deceleration and improved shifting.

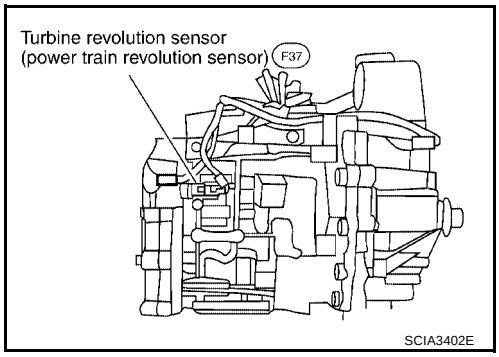

On Board Diagnosis Logic

UCS0015R

Diagnostic trouble code “TURBINE REV” with CONSULT-II or 10th judgement flicker without CONSULT-II is detected when TCM does not receive the proper voltage signal from the sensor.

Possible Cause

UCS0015S

Check the following items.

- Harness or connectors
  (The sensor circuit is open or shorted.)
- Turbine revolution sensor (power train revolution sensor)

Diagnostic Trouble Code (DTC) Confirmation Procedure

UCS0015T

CAUTION:

- **Always drive vehicle at a safe speed.**
- **If conducting this “DTC CONFIRMATION PROCEDURE” again, always turn ignition switch “OFF” and wait at least 5 seconds before continuing.**

After the repair, perform the following procedure to confirm the malfunction is eliminated.

WITH CONSULT-II

1. Start engine.
2. Select “DATA MONITOR” mode for “A/T” with CONSULT-II.

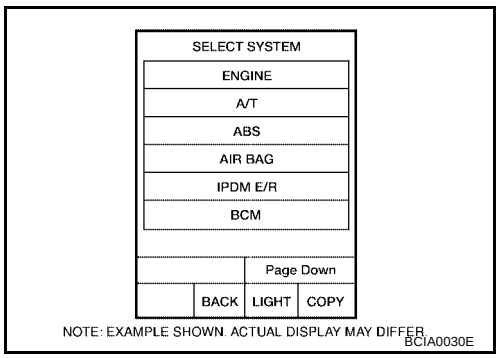

3. Drive vehicle under the following conditions:
   Selector lever in D, vehicle speed higher than 40 km/h (25 MPH), engine speed higher than 1,500 rpm, throttle opening greater than 1.0/8 of the full throttle position and driving for more than 5 seconds.

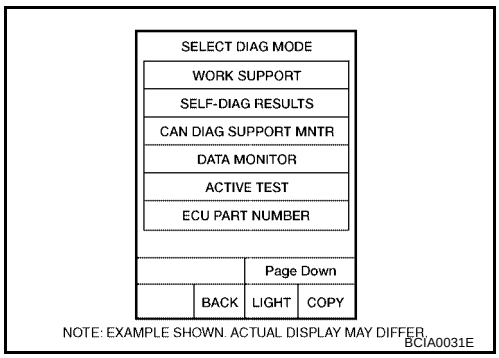

WITHOUT CONSULT-II

1. Start engine.
2. Drive vehicle under the following conditions:
   Selector lever in “D” and vehicle speed higher than 40 km/h (25 MPH), engine speed higher than 1,500 rpm, throttle opening greater than 1.0/8 of the full throttle position and driving for more than 5 seconds.
3. Perform self-diagnosis.
   Refer to AT-54, "TCM SELF-DIAGNOSTIC PROCEDURE (NO TOOLS)" .

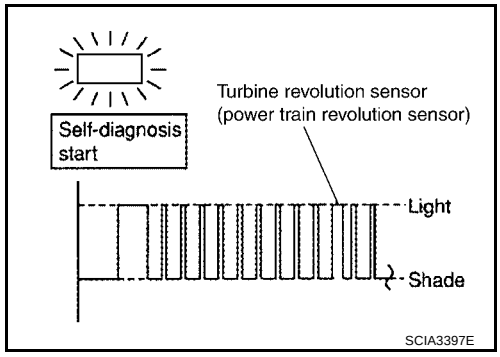

Wiring Diagram — AT — TRSA/T

UCS000Q7

AT-TRSA/T-01

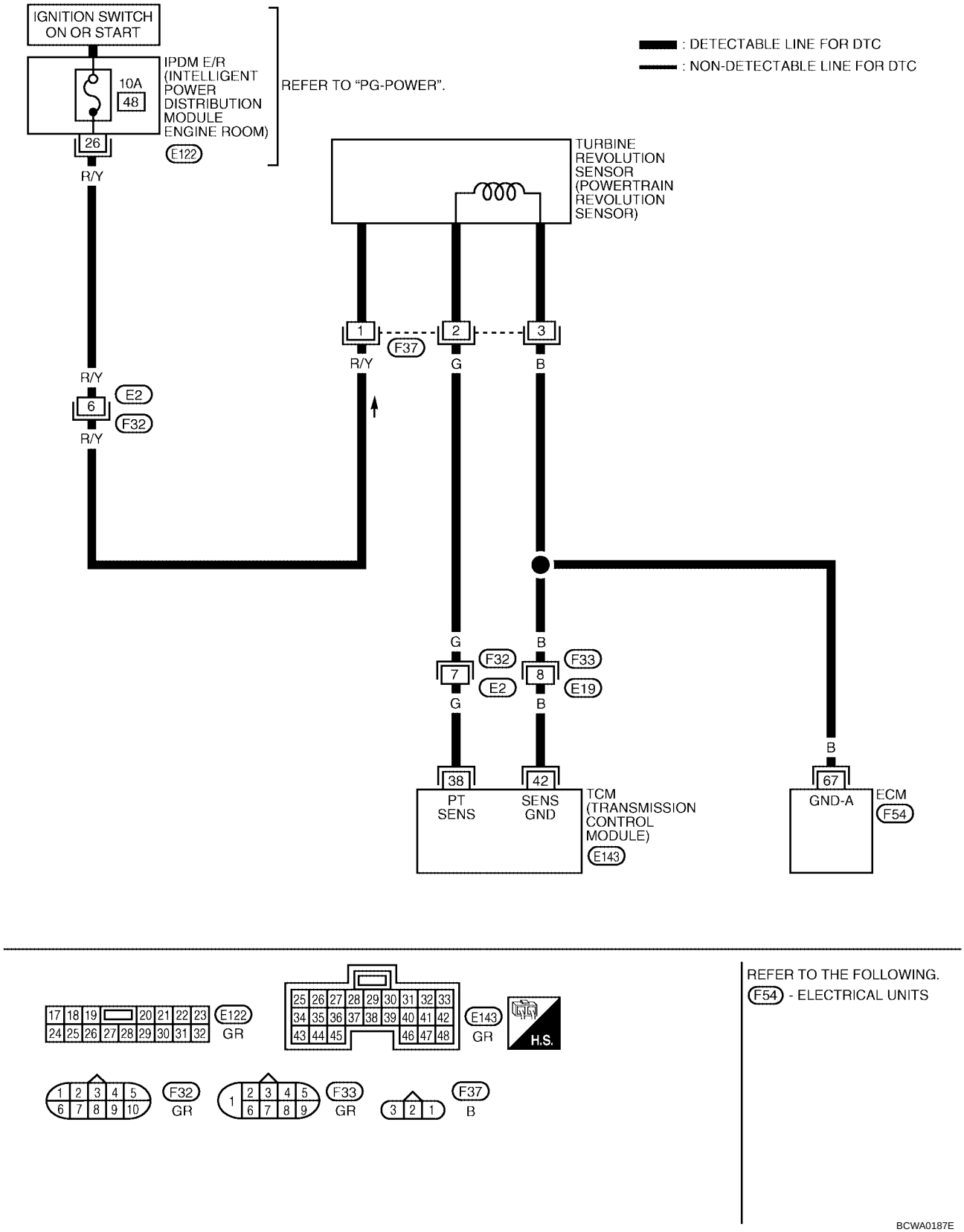

TCM TERMINALS AND REFERENCE VALUE (MEASURED BETWEEN EACH TERMINAL AND GROUND)

TERMINAL	WIRE COLOR	ITEM	CONDITION	DATA (APPROX.)
38	G	TURBINE REVOLUTION SENSOR (POWER TRAIN REVOLUTION SENSOR)	WHEN MOVING AT 20 KM/H (12 MPH), USE THE CONSULT-II PULSE FREQUENCY MEASURING FUNCTION.*1 **CAUTION:** **CONNECT THE DIAGNOSIS DATA LINK CABLE TO THE VEHICLE DIAGNOSIS CONNECTOR.** *1: A CIRCUIT TESTER CANNOT BE USED TO TEST THIS ITEM.	240 Hz
			WHEN VEHICLE IS PARKED.	Under 1.3V or over 4.5V
42	B	SENSOR GROUND	Always	0V

Diagnostic Procedure

UCS000Q8

1. CHECK INPUT SIGNAL

With CONSULT-II

1. Start engine.
2. Select “DATA MONITOR” mode for “A/T” with CONSULT-II.
3. Read out the value of “TURBINE REV” while driving.
   Check the value changes according to driving speed.

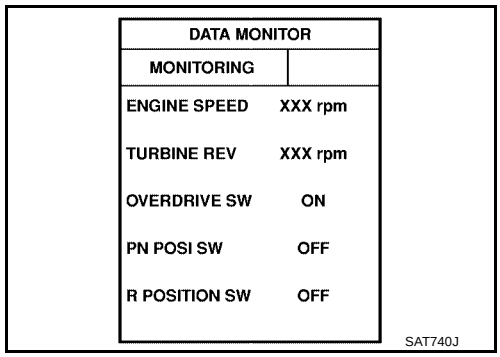

OK or NG

OK >> GO TO 5.
NG >> GO TO 2.

2. CHECK TURBINE REVOLUTION SENSOR (POWER TRAIN REVOLUTION SENSOR) (WITH CONSULT-II)

With CONSULT-II

1. Start engine.
2. Check pulse between TCM harness connector E143 terminal 38 (G) and ground.

Condition	Judgement standard (Approx.)
When moving at 20 Km/h (12 MPH), use the CONSULT-II pulse frequency measuring function.*1 **CAUTION:** **Connect the diagnosis data link cable to the vehicle diagnosis connector.** *1: A circuit tester cannot be used to test this item.	240 Hz
When vehicle parks.	Under 1.3V or over 4.5V

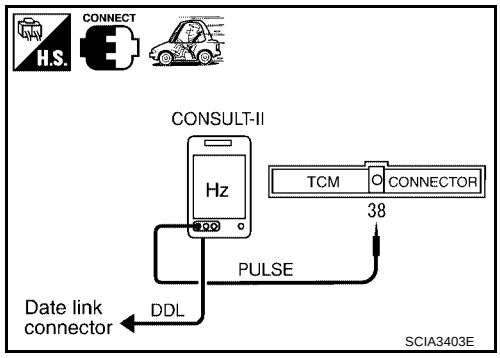

OK or NG

OK >> GO TO 5.
NG >> GO TO 3.

3. CHECK POWER FOR TURBINE REVOLUTION SENSOR (POWER TRAIN REVOLUTION SENSOR)

1. Turn ignition switch to OFF position.
2. Disconnect the turbine revolution sensor (power train revolution sensor) harness connector.
3. Turn ignition switch to ON position. (Do not start engine.)
4. Check voltage between turbine revolution sensor (power train revolution sensor) harness connector F37 terminal 1 (R/Y) and ground.

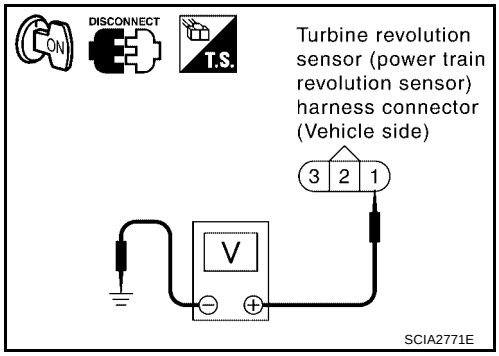

Voltage **: Battery voltage**

OK or NG

OK >> GO TO 4.
NG >> Check the following items. If any items is damaged, repair or replace damaged parts.
- Fuse
- Harness for short or open between ignition switch and turbine revolution sensor (power train revolution sensor)
- Ignition switch
  Refer to PG-4, "POWER SUPPLY ROUTING CIRCUIT" .

4. DETECT MALFUNCTIONING ITEM

Check harness for short or open between TCM, ECM and turbine revolution sensor (power train revolution sensor).

OK or NG

OK >> Repair or replace turbine revolution sensor (power train revolution sensor).
NG >> Repair or replace damaged parts.

5. CHECK DTC

Perform AT-200, "Diagnostic Trouble Code (DTC) Confirmation Procedure" .

OK or NG

OK >> **INSPECTION END.**
NG >> GO TO 6.

6. CHECK TCM INSPECTION

1. Perform TCM input/output signal inspection. Refer to AT-96, "TCM Terminals and Reference Value" .
2. If NG, recheck TCM pin terminal for damage or loose connection with harness connector.

OK or NG

OK >> **INSPECTION END.**
NG >> Repair or replace damaged parts.

DTC CONTROL UNIT (RAM), CONTROL UNIT (ROM)

PFP:31036

Description

UCS000QA

The TCM consists of a microcomputer and connectors for signal input and output and for power supply. The unit controls the A/T.

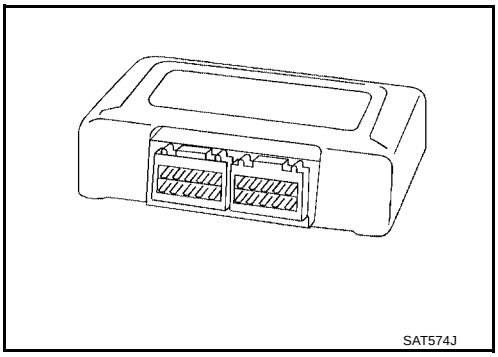

On Board Diagnosis Logic

UCS000QB

Diagnostic trouble code “CONTROL UNIT (RAM)”, “CONTROL UNIT (ROM)” with CONSULT-II is detected when TCM memory (RAM) or (ROM).

Possible Cause

UCS000QC

TCM.

Diagnostic Trouble Code (DTC) Confirmation Procedure

UCS000QD

NOTE:
If “DTC Confirmation Procedure” has been previously conducted, always turn ignition switch OFF and wait at least 10 seconds before conducting the next test.

WITH CONSULT-II

1. Turn ignition switch ON and select “DATA MONITOR” mode for A/T with CONSULT-II.
2. Start engine.

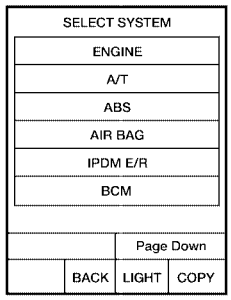

NOTE: EXAMPLE SHOWN. ACTUAL DISPLAY MAY DIFFER.
BCIA0030E

3. Run engine for at least 2 seconds at idle speed.

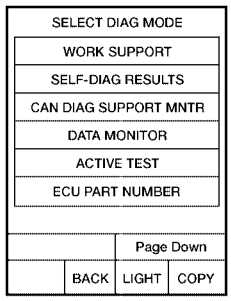

NOTE: EXAMPLE SHOWN. ACTUAL DISPLAY MAY DIFFER.
BCIA0031E

Diagnostic Procedure

UCS000QE

1. INSPECTION START

With CONSULT-II

1. Turn ignition switch ON and select “SELF DIAGNOSIS” mode for A/T with CONSULT-II.
2. Touch “ERASE”.
3. Perform AT-205, "Diagnostic Trouble Code (DTC) Confirmation Procedure" .
4. Is the “CONTROL UNIT (RAM)” or “CONTROL UNIT (ROM)” displayed again?

Yes or No

Yes >> Replace TCM.
No >> **INSPECTION END**

DTC CONTROL UNIT (EEP ROM)

PFP:31036

Description

UCS000QF

The TCM consists of a microcomputer and connectors for signal input and output and for power supply. The unit controls the A/T.

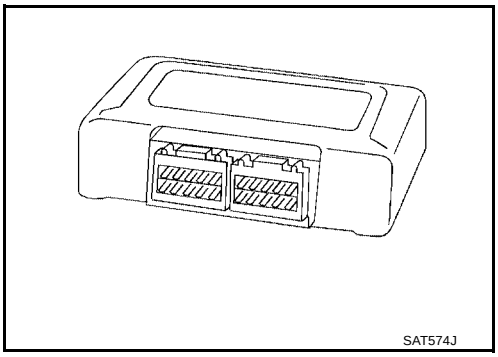

On Board Diagnosis Logic

UCS0015U

Diagnostic trouble code “CONTROL UNIT (EEP ROM)” with CONSULT-II is detected when TCM memory (EEP ROM) is malfunctioning.

Possible Cause

UCS0015V

TCM.

Diagnostic Trouble Code (DTC) Confirmation Procedure

UCS0015W

NOTE:
If “DTC Confirmation Procedure” has been previously conducted, always turn ignition switch OFF and wait at least 10 seconds before conducting the next test.

WITH CONSULT-II

1. Turn ignition switch “ON” and select “DATA MONITOR” mode for A/T with CONSULT-II.
2. Start engine.

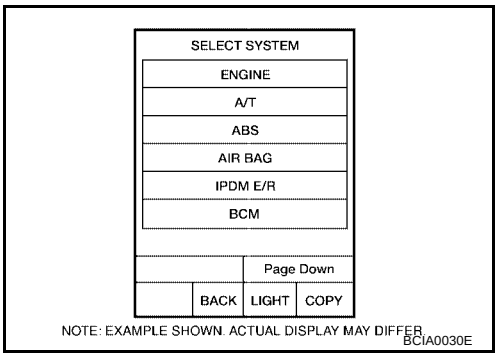

3. Run engine for at least 2 seconds at idle speed.

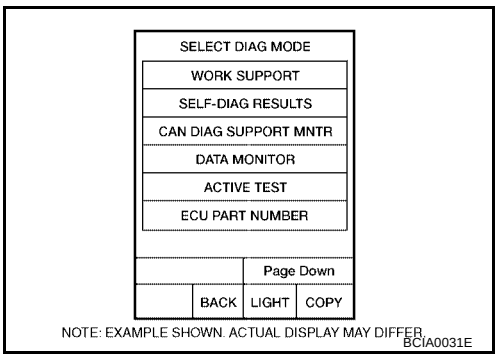

Diagnostic Procedure

UCS000QG

1. CHECK DTC

With CONSULT-II

1. Turn ignition switch “ON” and select “SELF DIAGNOSIS” mode for A/T with CONSULT-II.
2. Move selector lever to “R” position.
3. Depress accelerator pedal (Full throttle position).
4. Touch “ERASE”.
5. Turn ignition switch “OFF” position for 10 seconds.
6. Perform AT-207, "Diagnostic Trouble Code (DTC) Confirmation Procedure" .

Is the “CONT UNIT (EEP ROM)” displayed again?

Yes >> Replace TCM.
No >> **INSPECTION END**

TROUBLE DIAGNOSIS FOR SYMPTOMS

PFP:00007

Wiring Diagram — AT — NONDTC

UCS000QH

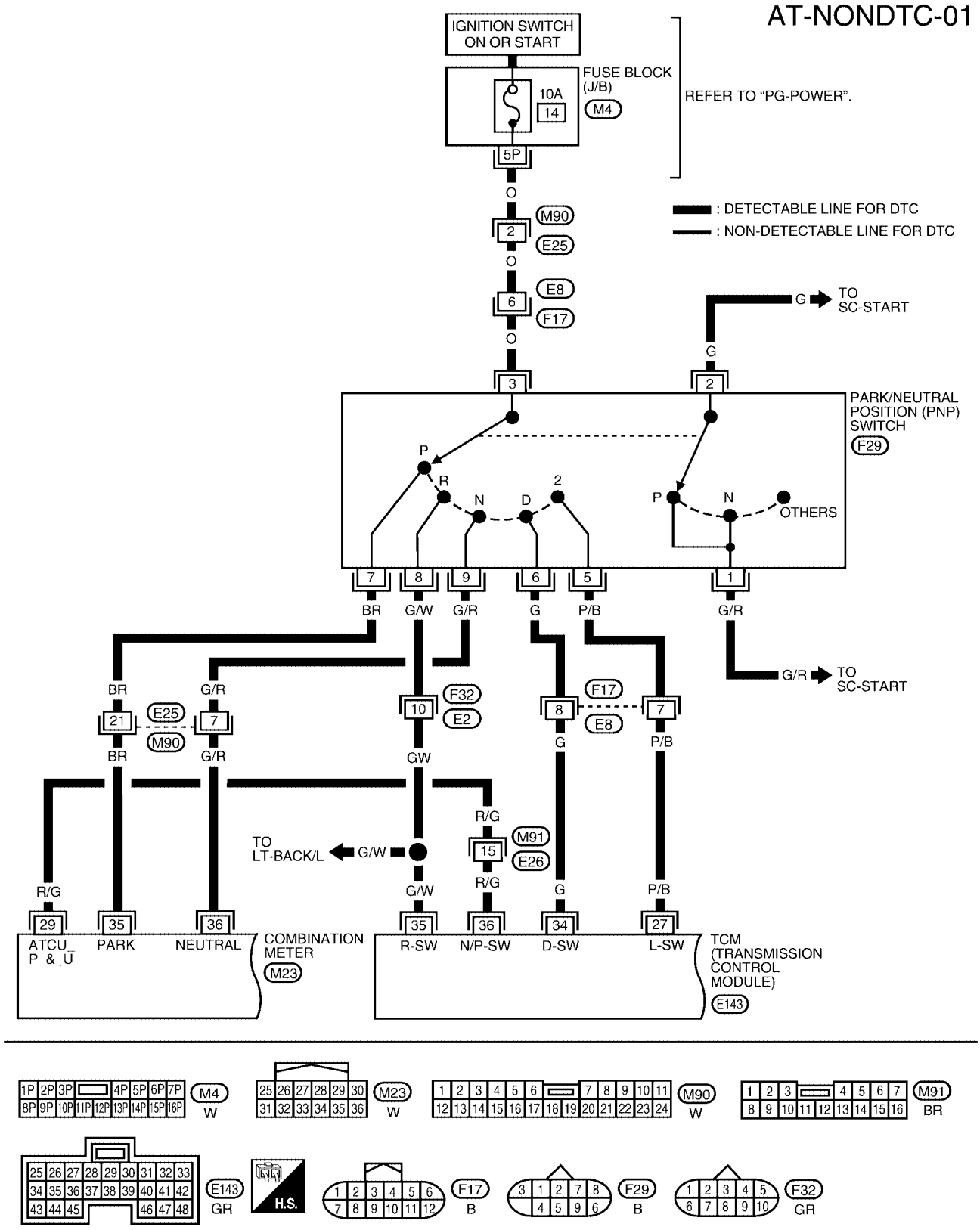

BCWA0420E

TCM TERMINALS AND REFERENCE VALUE (MEASURED BETWEEN EACH TERMINAL AND GROUND)

TERMINAL	WIRE COLOR	ITEM	CONDITION	DATA (APPROX.)
27	P/B	PNP SWITCH L POSITION	IGNITION ON AND SELECTOR LEVER IN L POSITION	BATTERY VOLTAGE
			IGNITION ON AND SELECTOR LEVER IN OTHER POSITIONS	0V
34	G	PNP SWITCH D POSITION	IGNITION ON AND SELECTOR LEVER IN D POSITION	BATTERY VOLTAGE
			IGNITION ON AND SELECTOR LEVER IN OTHER POSITIONS	0V
35	G/W	PNP SWITCH R POSITION	IGNITION ON AND SELECTOR LEVER IN R POSITION	BATTERY VOLTAGE
			IGNITION ON AND SELECTOR LEVER IN OTHER POSITIONS	0V
36	R/G	PNP SWITCH P OR N POSITION	IGNITION ON AND SELECTOR LEVER IN P OR N POSITION	BATTERY VOLTAGE
			IGNITION ON AND SELECTOR LEVER IN OTHER POSITIONS	0V

AT-NONDTC-02

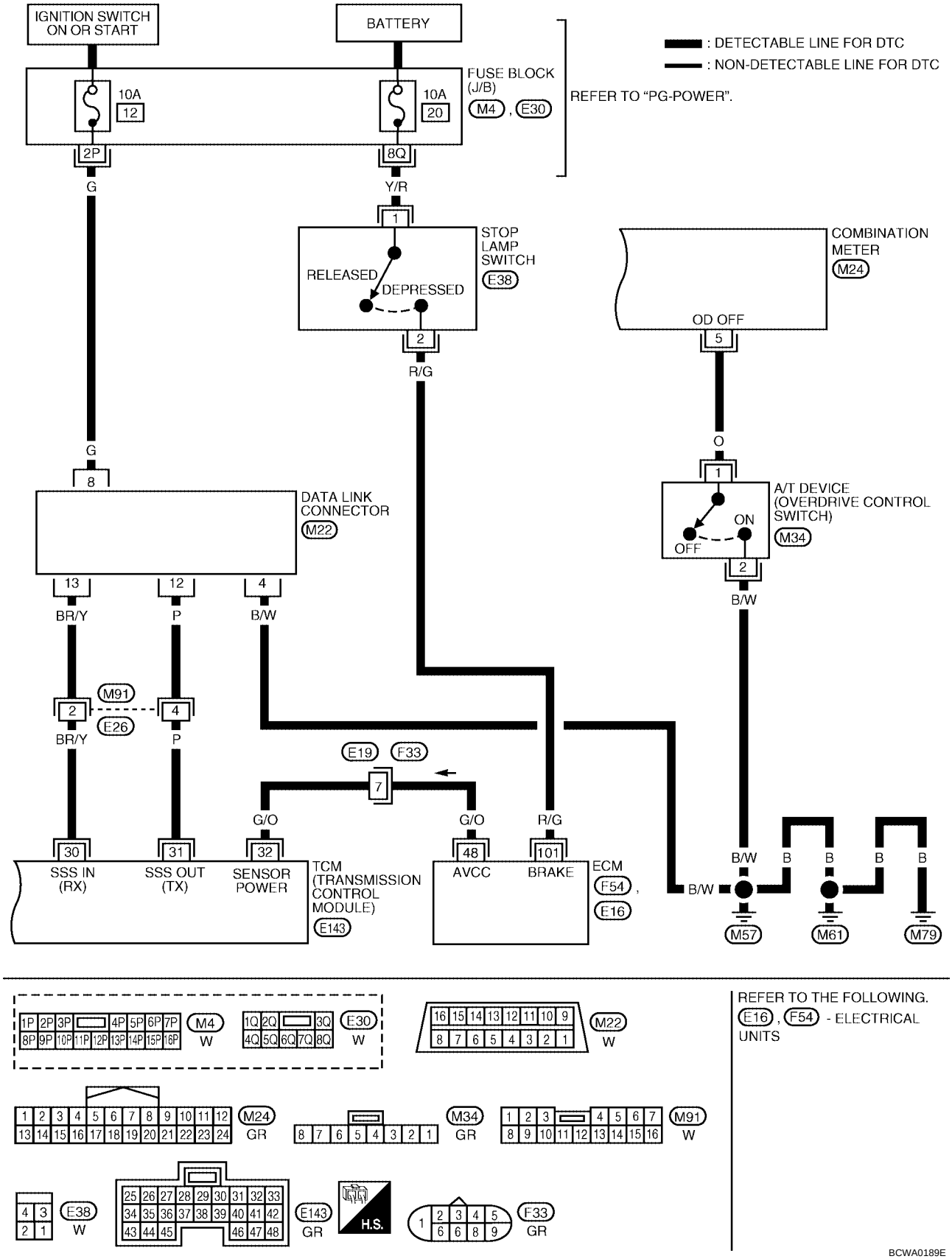
IGNITION SWITCH ON OR START
BATTERY
: DETECTABLE LINE FOR DTC
: NON-DETECTABLE LINE FOR DTC
FUSE BLOCK (J/B)
M4 , E30
REFER TO "PG-POWER".
10A 12
10A 20
2P
8Q
G
Y/R
STOP LAMP SWITCH
E38
RELEASED
DEPRESSED
COMBINATION METER
M24
OD OFF
R/G
O
A/T DEVICE (OVERDRIVE CONTROL SWITCH)
M34
ON
OFF
B/W
DATA LINK CONNECTOR
M22
BR/Y
P
M91
E26
E19
F33
G/O
R/G
SSS IN (RX)
SSS OUT (TX)
SENSOR POWER
TCM (TRANSMISSION CONTROL MODULE)
E143
AVCC
BRAKE
ECM
F54 , E16
B
M57
M61
M79
REFER TO THE FOLLOWING.
E16 , F54 - ELECTRICAL UNITS
M4 W
E30 W
M22 W
M24 GR
M34 GR
M91 W
E38 W
E143 GR
H.S.
F33 GR
BCWA0189E

TCM TERMINALS AND REFERENCE VALUE MEASURED BETWEEN EACH TERMINAL AND 25 OR 48 (TCM GROUND)				
TERMINAL	WIRE COLOR	ITEM	CONDITION	DATA (APPROX.)
30	BR/Y	DATA LINK CONNECTOR (RX)	—	—
31	P	DATA LINK CONNECTOR (TX)	—	—
32	G/O	SENSOR POWER	IGNITION SWITCH ON	4.5 - 5.5V
			IGNITION SWITCH OFF	0V

O/D OFF Indicator Lamp Does Not Come On

UCS000QI

SYMPTOM:
O/D OFF indicator lamp does not come on for about 2 seconds when turning ignition switch to ON.

1. CHECK TCM POWER SOURCE STEP 1

1. Turn ignition switch to ON position. (Do not start engine.)
2. Check voltage between TCM harness connectors E142, E143 terminals 10 (R/Y), 19 (R/Y), 28 (Y/R) and ground.

Voltage : Battery voltage

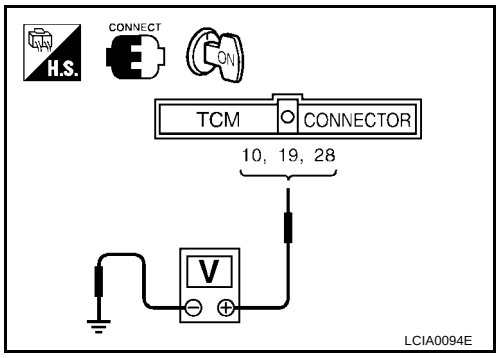

OK or NG

OK >> GO TO 2.
NG >> GO TO 3.

2. CHECK TCM POWER SOURCE STEP 2

1. Turn ignition switch to OFF position.
2. Check voltage between TCM harness connector E143 terminal 28 (Y/R) and ground.

Voltage : Battery voltage

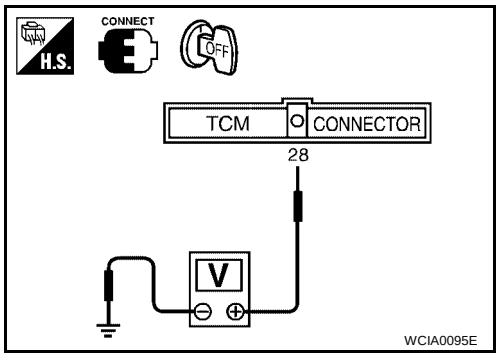

OK or NG

OK >> GO TO 4.
NG >> GO TO 3.

3. DETECT MALFUNCTIONING ITEM

Check the following items:

- Fuse
- Harness for short or open between battery, ignition switch and TCM harness connectors E142, E143 terminals 10 (R/Y), 19 (R/Y) and 28 (Y/R)
  Refer to AT-100, "Wiring Diagram — AT — MAIN" .
- Ignition switch
  Refer to PG-4, "POWER SUPPLY ROUTING CIRCUIT" .

OK or NG

OK >> GO TO 4.
NG >> Repair or replace damaged parts.

4. CHECK TCM GROUND CIRCUIT

1. Turn ignition switch to OFF position.
2. Disconnect TCM harness connector.
3. Check continuity between TCM harness connector E143 terminals 25 (B), 48 (B) and ground.

   Continuity should exist.

   If OK, check harness for short to ground and short to power.

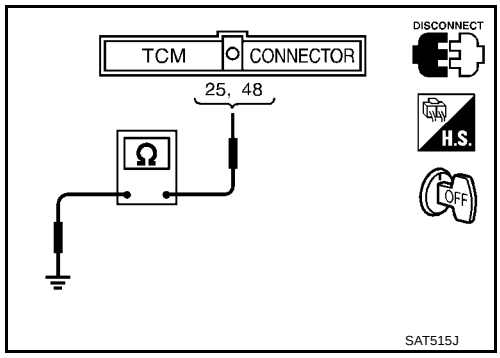

OK or NG

OK >> GO TO 5.
NG >> Repair open circuit or short to ground or short to power in harness or connectors. Refer to AT-100, "Wiring Diagram — AT — MAIN" .

5. CHECK O/D OFF INDICATOR LAMP CIRCUIT

1. Turn ignition switch “OFF”.
2. Check the combination meter.
   Refer to DI-5, "COMBINATION METERS" .

OK or NG

OK >> GO TO 6.
NG >> Replace the combination meter. Refer to DI-21, "Removal and Installation of Combination Meter" .

6. CHECK SYMPTOM

Check again.

OK or NG

OK >> **INSPECTION END**
NG >> GO TO 7.

7. CHECK TCM INSPECTION

1. Perform TCM input/output signal inspection. Refer to AT-96, "TCM Terminals and Reference Value" .
2. If NG, recheck TCM pin terminals for damage or loose connection with harness connector.

OK or NG

OK >> **INSPECTION END**
NG >> Repair or replace damaged parts.

Engine Cannot Be Started in P and N Position

UCS000QJ

SYMPTOM:

- **Engine cannot be started with selector lever in P or N position.**
- **Engine can be started with selector lever in D, L or R position.**

1. CHECK PARK/NEUTRAL POSITION (PNP) SWITCH CIRCUIT

With CONSULT-II

Does “DATA MONITOR” show damage to park/neutral position (PNP) switch circuit?

Without CONSULT-II

Does self-diagnosis show damage to park/neutral position (PNP) switch circuit?

Yes or No

Yes >> Check park/neutral position (PNP) switch circuit. Refer to AT-106, "DTC P0705 PARK/NEUTRAL POSITION SWITCH" .

No >> GO TO 2.

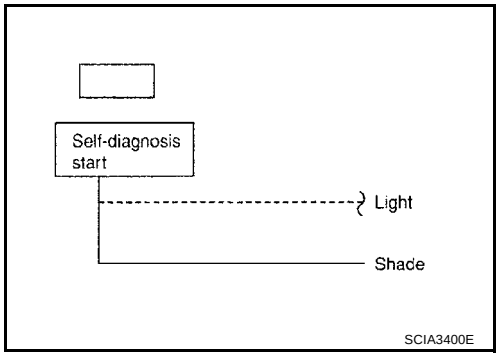

2. CHECK PARK/NEUTRAL POSITION (PNP) SWITCH

Check for short or open of park/neutral position (PNP) switch harness connector F29 terminals 1(G/R) and 2(G). Refer to AT-108, "Wiring Diagram — AT — PNP/SW" .

OK or NG

OK >> GO TO 3.

NG >> Repair or replace park/neutral position (PNP) switch.

3. ADJUST CONTROL CABLE

Check control cable. Refer to AT-258, "Control Cable Adjustment"

OK or NG

OK >> GO TO 4.

NG >> Adjust control cable. Refer to AT-258, "Control Cable Adjustment" .

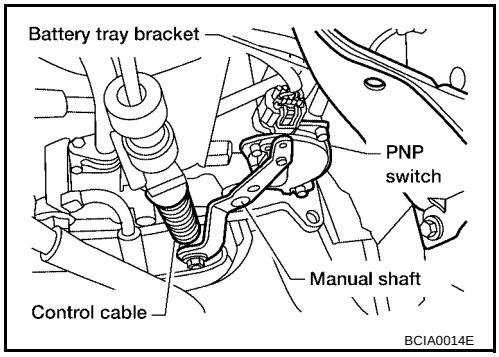

4. CHECK STARTING SYSTEM

Check starting system. Refer to SC-13, "Trouble Diagnoses with Battery/Starting/Charging System Tester" .

OK or NG

OK >> **INSPECTION END**

NG >> Repair or replace damaged parts.

In P Position, Vehicle Moves Forward or Backward When Pushed

UCS000QK

SYMPTOM:
Vehicle moves when it is pushed forward or backward with selector lever in P position.

1. ADJUST CONTROL CABLE

Check control cable. Refer to AT-258, "Control Cable Adjustment"

OK or NG

OK >> GO TO 2.
NG >> Adjust control cable. Refer to AT-258, "Control Cable Adjustment" .

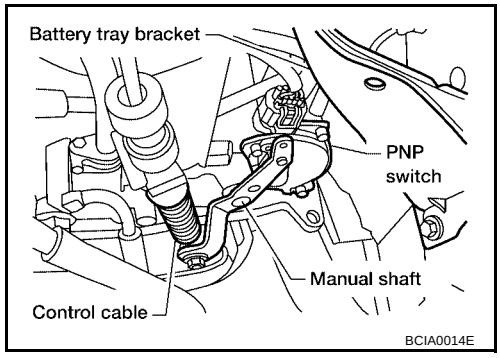

2. CHECK PARKING COMPONENTS

Check parking components. Refer to AT-261, "OVERHAUL" and AT-268, "DISASSEMBLY" .

OK or NG

OK >> **INSPECTION END**
NG >> Repair or replace damaged parts.

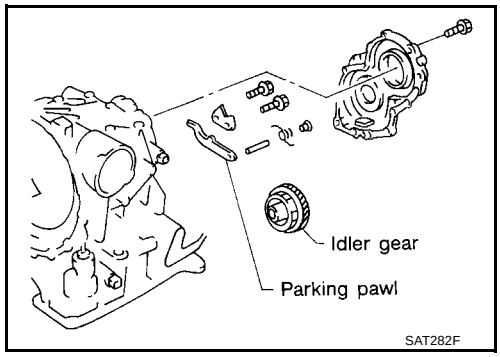

In N Position, Vehicle Moves

UCS000QL

SYMPTOM:
Vehicle moves forward or backward when selecting N position.

1. ADJUST CONTROL CABLE

Check control cable. Refer to AT-258, "Control Cable Adjustment"

OK or NG

OK >> GO TO 2.
NG >> Adjust control cable. Refer to AT-258, "Control Cable Adjustment" .

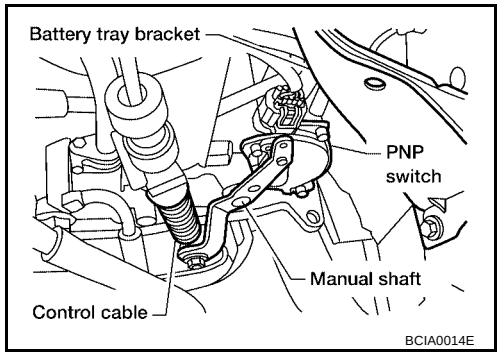

2. CHECK A/T FLUID LEVEL

Check A/T fluid level again.

OK or NG

OK >> GO TO 3.
NG >> Refill ATF.

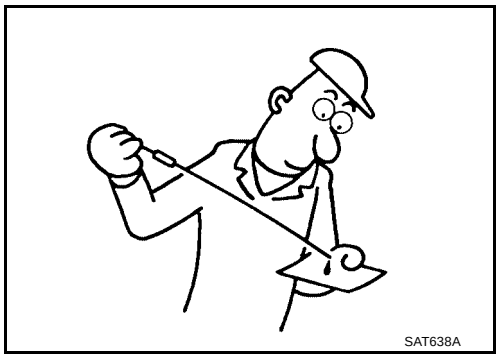

3. CHECK A/T FLUID CONDITION

1. Remove oil pan.
2. Check A/T fluid condition.

OK or NG

OK >> GO TO 5.
NG >> GO TO 4.

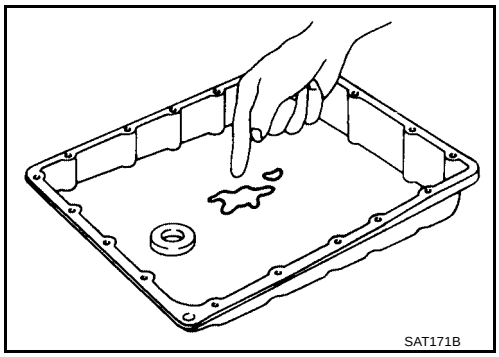

4. DETECT MALFUNCTIONING ITEM

1. Disassemble A/T.
2. Check the following items:

- Forward clutch assembly
- Overrun clutch assembly
- Reverse clutch assembly

OK or NG

OK >> GO TO 5.
NG >> Repair or replace damaged parts.

5. CHECK SYMPTOM

Check again.

OK or NG

OK >> **INSPECTION END**
NG >> GO TO 6.

6. CHECK TCM INSPECTION

1. Perform TCM input/output signal inspection. Refer to AT-96, "TCM Terminals and Reference Value" .
2. If NG, recheck TCM pin terminals for damage or loose connection with harness connector.

OK or NG

OK >> **INSPECTION END**
NG >> Repair or replace damaged parts.

Large Shock. N → R Position

UCS000QM

SYMPTOM:
There is large shock when changing from N to R position.

1. CHECK SELF-DIAGNOSTIC RESULTS

Does self-diagnosis show damage to A/T fluid temperature sensor, line pressure solenoid valve or accelerator pedal position (APP) sensor circuit?

Yes or No

Yes >> GO TO 2.
No >> GO TO 3.

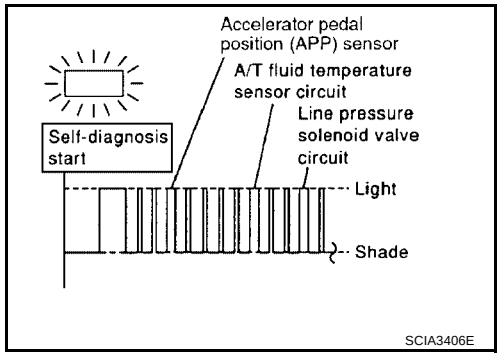

2. CHECK DAMAGED CIRCUIT

Check damaged circuit.

>> Refer to AT-112, "DTC P0710 A/T FLUID TEMPERATURE SENSOR CIRCUIT" , AT-162, "DTC P0745 LINE PRESSURE SOLENOID VALVE" or AT-178, "DTC P1705 THROTTLE POSITION SENSOR [ACCELERATOR PEDAL POSITION (APP) SENSOR]" .

3. CHECK LINE PRESSURE

Check line pressure at idle with selector lever in D position. Refer to AT-71, "Line Pressure Test" .

OK or NG

OK >> GO TO 5.
NG >> GO TO 4.

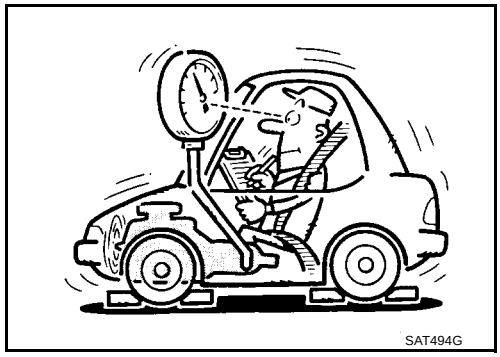

4. DETECT MALFUNCTIONING ITEM

1. Remove control valve assembly. Refer to AT-253, "Control Valve Assembly and Accumulators" .
2. Check the following items:

- Valves to control line pressure (Pressure regulator valve, pressure modifier valve, pilot valve and pilot filter)
- Line pressure solenoid valve
- Oil pump assembly

OK or NG

OK >> GO TO 5.
NG >> Repair or replace damaged parts.

5. CHECK SYMPTOM

Check again.

OK or NG

OK >> **INSPECTION END**
NG >> GO TO 6.

6. CHECK TCM INSPECTION

1. Perform TCM input/output signal inspection. Refer to AT-96, "TCM Terminals and Reference Value" .
2. If NG, recheck TCM pin terminals for damage or loose connection with harness connector.

OK or NG

OK >> **INSPECTION END**
NG >> Repair or replace damaged parts.

Vehicle Does Not Creep Backward in R Position

UCS000QN

SYMPTOM:
Vehicle does not creep backward when selecting R position.

1. CHECK A/T FLUID LEVEL

Check A/T fluid level again.

OK or NG

OK >> GO TO 2.
NG >> Refill ATF.

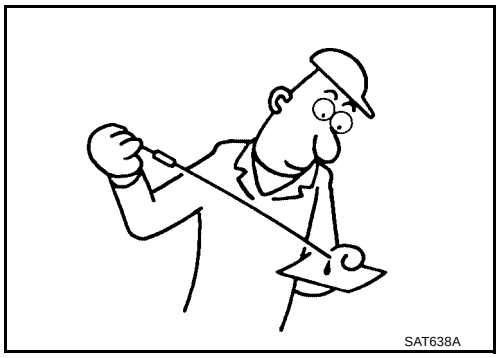

2. CHECK LINE PRESSURE

Check line pressure at idle with selector lever in R position. Refer to AT-71, "Line Pressure Test" .

OK or NG

OK >> GO TO 4.
NG >> GO TO 3.

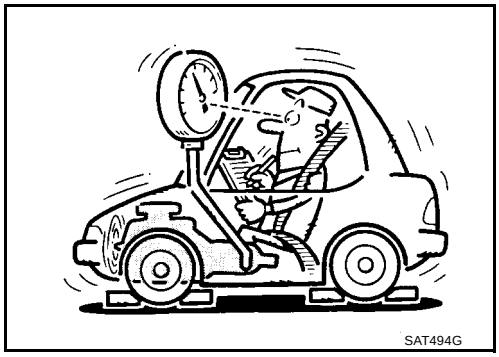

3. DETECT MALFUNCTIONING ITEM

1. Remove control valve assembly. Refer to AT-253, "Control Valve Assembly and Accumulators" .
2. Check the following items:
- Valves to control line pressure (Pressure regulator valve, pressure modifier valve, pilot valve and pilot filter)
- Line pressure solenoid valve
3. Disassemble A/T.
4. Check the following item:
- Oil pump assembly

OK or NG

OK >> GO TO 4.
NG >> Repair or replace damaged parts.

4. CHECK STALL REVOLUTION

Check stall revolution with selector lever in R positions.

OK or NG

OK >> GO TO 7.
NG >> GO TO 5.

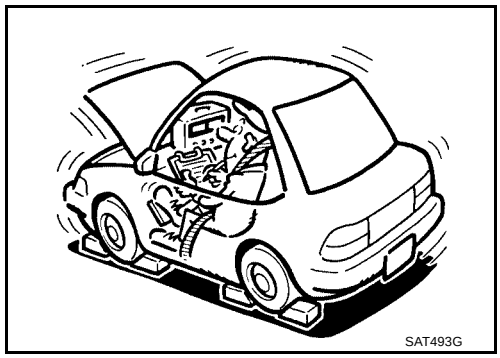

5. CHECK A/T FLUID CONDITION

1. Remove oil pan.
2. Check A/T fluid condition.

OK or NG

OK >> GO TO 7.
NG >> GO TO 6.

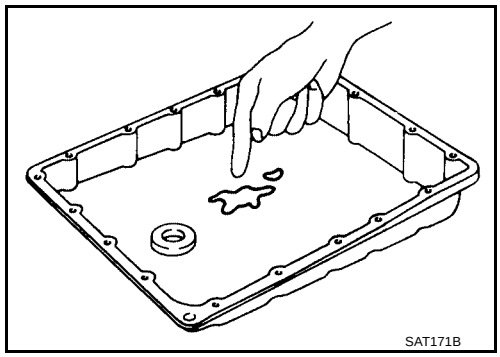

6. DETECT MALFUNCTIONING ITEM

1. Disassemble A/T.
2. Check the following items:

– Low & reverse brake assembly
– Reverse clutch assembly

OK or NG

OK >> GO TO 6.
NG >> Repair or replace damaged parts.

7. CHECK SYMPTOM

Check again.

OK or NG

OK >> **INSPECTION END**
NG >> GO TO 10.

8. CHECK TCM INSPECTION

1. Perform TCM input/output signal inspection. Refer to AT-96, "TCM Terminals and Reference Value" .
2. If NG, recheck TCM pin terminals for damage or loose connection with harness connector.

OK or NG

OK >> **INSPECTION END**
NG >> Repair or replace damaged parts.

Vehicle Does Not Creep Forward in D or L Position

UCS000QO

SYMPTOM:
Vehicle does not creep forward when selecting D or L position.

1. CHECK A/T FLUID LEVEL

Check A/T fluid level again.

OK or NG

OK >> GO TO 2.
NG >> Refill ATF.

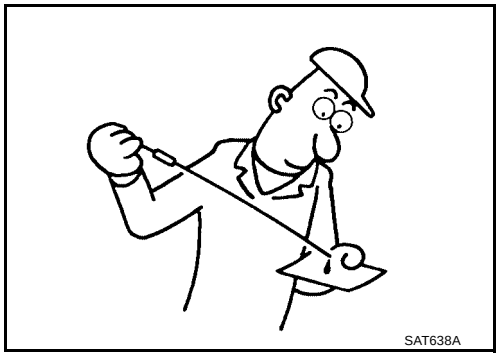

2. CHECK LINE PRESSURE

Check line pressure at idle with selector lever in D position. Refer to AT-71, "Line Pressure Test" .

OK or NG

OK >> GO TO 4.
NG >> GO TO 3.

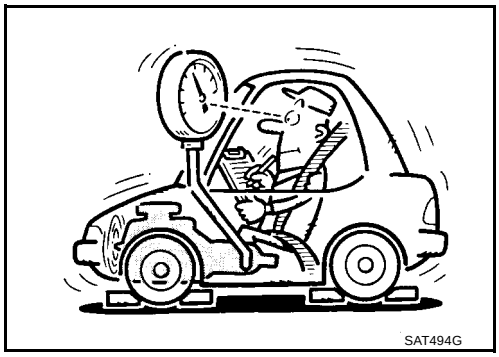

3. DETECT MALFUNCTIONING ITEM

1. Remove control valve assembly. Refer to AT-253, "Control Valve Assembly and Accumulators" .
2. Check the following items:
- Valves to control line pressure (Pressure regulator valve, pressure modifier valve, pilot valve and pilot filter)
- Line pressure solenoid valve
3. Disassemble A/T.
4. Check the following item:
- Oil pump assembly

OK or NG

OK >> GO TO 4.
NG >> Repair or replace damaged parts.

4. CHECK STALL REVOLUTION

Check stall revolution with selector lever in D position. Refer to AT-68, "Stall Test" .

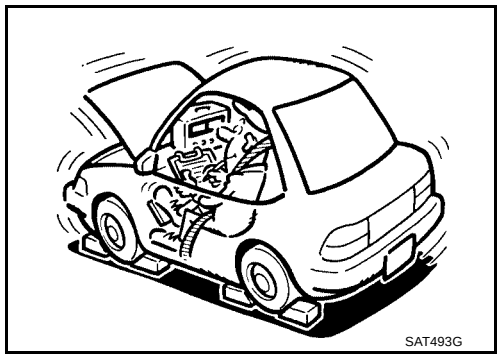

OK or NG

OK >> GO TO 6.
NG >> GO TO 5.

5. DETECT MALFUNCTIONING ITEM

1. Disassemble A/T.
2. Check the following items:

- Reverse clutch assembly
- Forward clutch assembly
- Forward one-way clutch
- Low one-way clutch
- High clutch assembly

OK or NG

OK >> GO TO 6.
NG >> Repair or replace damaged parts.

6. CHECK A/T FLUID CONDITION

1. Remove oil pan.
2. Check A/T fluid condition.

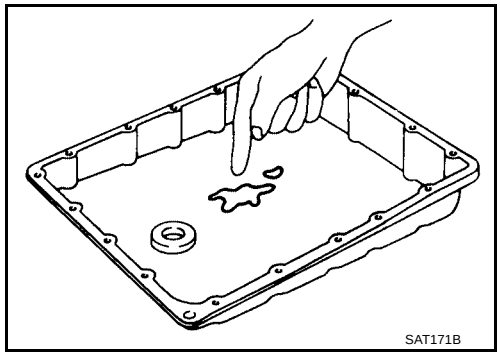

OK or NG

OK >> GO TO 8.
NG >> GO TO 7.

7. DETECT MALFUNCTIONING ITEM

1. Disassemble A/T.
2. Check the following items:

- Reverse clutch assembly
- Forward clutch assembly
- Forward one-way clutch
- Low one-way clutch
- High clutch assembly

OK or NG

OK >> GO TO 8.
NG >> Repair or replace damaged parts.

8. CHECK SYMPTOM

Check again.

OK or NG

OK >> **INSPECTION END**
NG >> GO TO 9.

9. CHECK TCM INSPECTION

1. Perform TCM input/output signal inspection. Refer to AT-96, "TCM Terminals and Reference Value" .
2. If NG, recheck TCM pin terminals for damage or loose connection with harness connector.

OK or NG

OK >> **INSPECTION END**
NG >> Repair or replace damaged parts.

Vehicle Cannot Be Started From D1

UCS000QP

SYMPTOM:
Vehicle cannot be started from D1 on Cruise test — Part 1.

1. CHECK SYMPTOM

Is “Vehicle Does Not Creep Backward in R Position” OK?

Yes or No

Yes >> GO TO 2.
No >> Go to AT-218, "Vehicle Does Not Creep Backward in R Position" .

2. CHECK SELF-DIAGNOSTIC RESULTS

Does self-diagnosis show damage to vehicle speed sensor·A/T (revolution sensor), overrun clutch solenoid valve, torque converter clutch solenoid valve, shift solenoid valve A, B or vehicle speed sensor·MTR after cruise test?

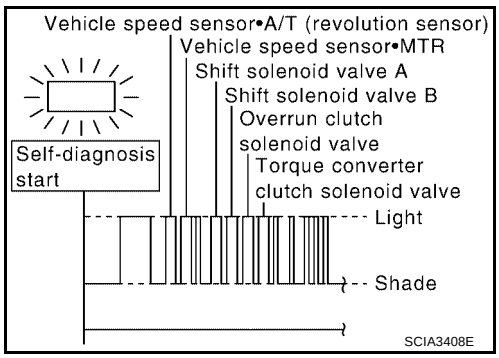

Yes or No

Yes >> Check damaged circuit. Refer to AT-118, "DTC P0720 VEHICLE SPEED SENSOR·A/T (REVOLUTION SENSOR)" , AT-184, "DTC P1760 OVERRUN CLUTCH SOLENOID VALVE" , AT-149, "DTC P0740 TORQUE CONVERTER CLUTCH SOLENOID VALVE" , AT-168, "DTC P0750 SHIFT SOLENOID VALVE A" , AT-173, "DTC P0755 SHIFT SOLENOID VALVE B" or AT-195, "DTC VEHICLE SPEED SENSOR MTR" .
No >> GO TO 3.

3. CHECK ACCELERATOR PEDAL POSITION (APP) SENSOR

Check accelerator pedal position (APP) sensor. Refer to AT-178, "DTC P1705 THROTTLE POSITION SENSOR [ACCELERATOR PEDAL POSITION (APP) SENSOR]" .

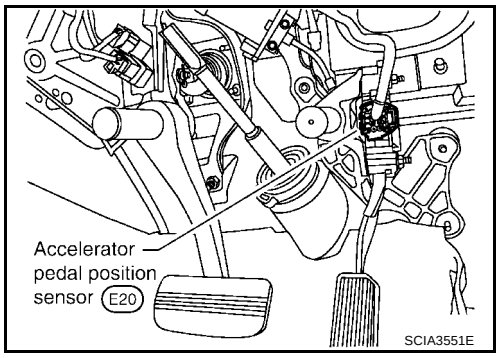

OK or NG

OK >> GO TO 4.
NG >> Repair or replace accelerator pedal position (APP) sensor circuit.

4. CHECK LINE PRESSURE

Check line pressure at stall point with selector lever in D position. Refer to AT-71, "Line Pressure Test" .

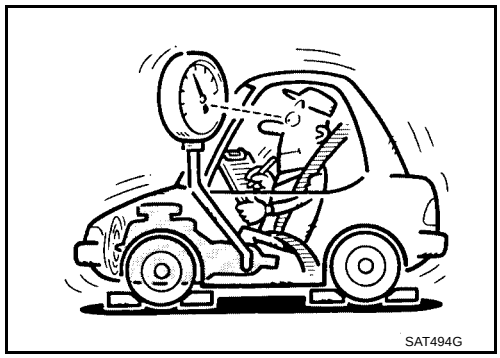

OK or NG

OK >> GO TO 6.
NG >> GO TO 5.

5. DETECT MALFUNCTIONING ITEM

1. Remove control valve assembly. Refer to AT-253, "Control Valve Assembly and Accumulators" .
2. Check the following items:
- Shift valve A
- Shift valve B
- Shift solenoid valve A
- Shift solenoid valve B
- Pilot valve
- Pilot filter
3. Disassemble A/T.
4. Check the following items:
- Reverse clutch assembly
- Low & reverse brake assembly
- High clutch assembly
- Forward clutch assembly
- Forward one-way clutch
- Low one-way clutch
- Torque converter
- Oil pump assembly

OK or NG

OK >> GO TO 8.
NG >> Repair or replace damaged parts.

6. CHECK A/T FLUID CONDITION

1. Remove oil pan.
2. Check A/T fluid condition.

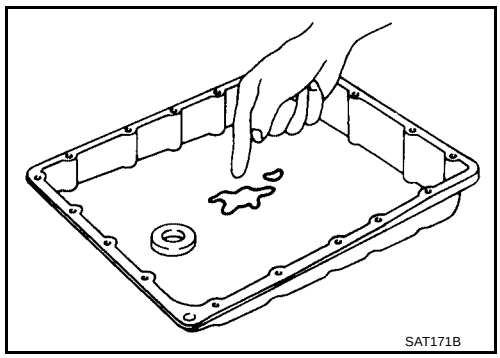

OK or NG

OK >> GO TO 7.
NG >> GO TO 5.

7. DETECT MALFUNCTIONING ITEM

1. Remove control valve assembly. Refer to AT-253, "Control Valve Assembly and Accumulators" .
2. Check the following items:

- Shift valve A
- Shift valve B
- Shift solenoid valve A
- Shift solenoid valve B
- Pilot valve
- Pilot filter

OK or NG

OK >> GO TO 8.
NG >> Repair or replace damage parts.

8. CHECK SYMPTOM

Check again.

OK or NG

OK >> **INSPECTION END**
NG >> GO TO 9.

9. CHECK TCM INSPECTION

1. Perform TCM input/output signal inspection. Refer to AT-96, "TCM Terminals and Reference Value" .
2. If NG, recheck TCM pin terminals for damage or loose connection with harness connector.

OK or NG

OK >> **INSPECTION END**
NG >> Repair or replace damaged parts.

A/T Does Not Shift: $D_1 \rightarrow D_2$ or Does Not Kickdown: $D_4 \rightarrow D_2$

UCS000QQ

SYMPTOM:
A/T does not shift from D_1 to D_2 at the specified speed.
A/T does not shift from D_4 to D_2 when depressing accelerator pedal fully at the specified speed.

1. CHECK SYMPTOM

Are “Vehicle Does Not Creep Forward In D or L Position” and “Vehicle Cannot Be Started From D_1 ” OK?

Yes or No

Yes >> GO TO 2.
No >> Go to AT-220, "Vehicle Does Not Creep Forward in D or L Position" and AT-222, "Vehicle Cannot Be Started From D_1" .

2. ADJUST CONTROL CABLE

Check control cable. Refer to AT-258, "Control Cable Adjustment"

OK or NG

OK >> GO TO 3.
NG >> Adjust control cable. Refer to AT-258, "Control Cable Adjustment" .

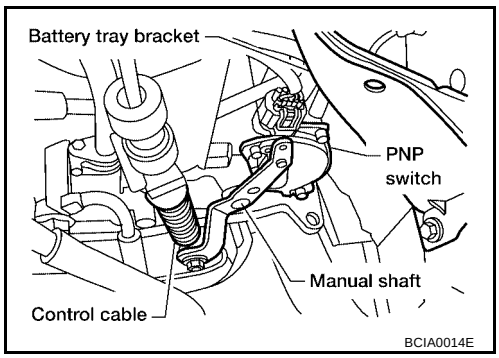

3. CHECK VEHICLE SPEED SENSOR·A/T AND VEHICLE SPEED SENSOR·MTR CIRCUIT

Check vehicle speed sensor·A/T (revolution sensor) and vehicle speed sensor·MTR circuit. Refer to AT-118, "DTC P0720 VEHICLE SPEED SENSOR·A/T (REVOLUTION SENSOR)" and AT-195, "DTC VEHICLE SPEED SENSOR MTR" .

OK or NG

OK >> GO TO 4.
NG >> Repair or replace vehicle speed sensor·A/T (revolution sensor) and vehicle speed sensor·MTR circuits.

4. CHECK ACCELERATOR PEDAL POSITION (APP) SENSOR

Check accelerator pedal position (APP) sensor. Refer to AT-178, "DTC P1705 THROTTLE POSITION SENSOR [ACCELERATOR PEDAL POSITION (APP) SENSOR]" .

OK or NG

OK >> GO TO 5.
NG >> Repair or replace accelerator pedal position (APP) sensor circuit.

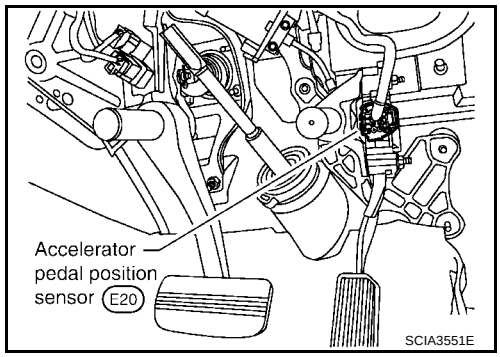

5. CHECK A/T FLUID CONDITION

1. Remove oil pan.
2. Check A/T fluid condition.

OK or NG

OK >> GO TO 7.
NG >> GO TO 6.

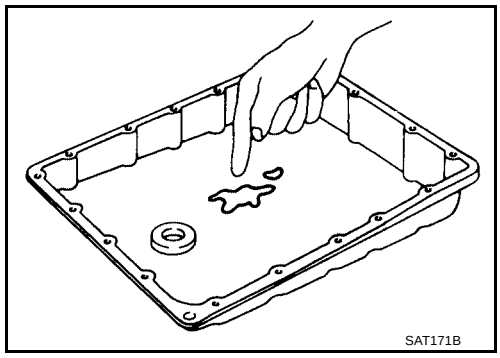

6. DETECT MALFUNCTIONING ITEM

1. Remove control valve. Refer to AT-253, "Control Valve Assembly and Accumulators" .
2. Check the following items:
- Shift valve A
- Shift valve B
- Shift solenoid valve A
- Shift solenoid valve B
- Pilot valve
- Pilot filter
3. Disassemble A/T.
4. Check the following items:
- Servo piston assembly
- Brake band

OK or NG

OK >> GO TO 8.
NG >> Repair or replace damaged parts.

7. DETECT MALFUNCTIONING ITEM

1. Remove control valve. Refer to AT-253, "Control Valve Assembly and Accumulators" .
2. Check the following items:

- Shift valve A
- Shift valve B
- Shift solenoid valve A
- Shift solenoid valve B
- Pilot valve
- Pilot filter

OK or NG

OK >> GO TO 8.
NG >> Repair or replace damaged parts.

8. CHECK SYMPTOM

Check again.

OK or NG

OK >> **INSPECTION END**
NG >> GO TO 9.

9. CHECK TCM INSPECTION

1. Perform TCM input/output signal inspection. Refer to AT-96, "TCM Terminals and Reference Value" .
2. If NG, recheck TCM pin terminals for damage or loose connection with harness connector.

OK or NG

OK >> **INSPECTION END**
NG >> Repair or replace damaged parts.

A/T Does Not Shift: $D_2 \rightarrow D_3$

UCS000QR

SYMPTOM:
A/T does not shift from D_2 to D_3 at the specified speed.

1. CHECK SYMPTOM

Are “Vehicle Does Not Creep Forward in D or L Position” and “Vehicle Cannot Be Started From D_1” OK?

Yes or No

Yes >> GO TO 2.
No >> Go to AT-220, "Vehicle Does Not Creep Forward in D or L Position" and AT-222, "Vehicle Cannot Be Started From D_1" .

2. ADJUST CONTROL CABLE

Check control cable. Refer to AT-258, "Control Cable Adjustment"

OK or NG

OK >> GO TO 3.
NG >> Adjust control cable. Refer to AT-258, "Control Cable Adjustment" .

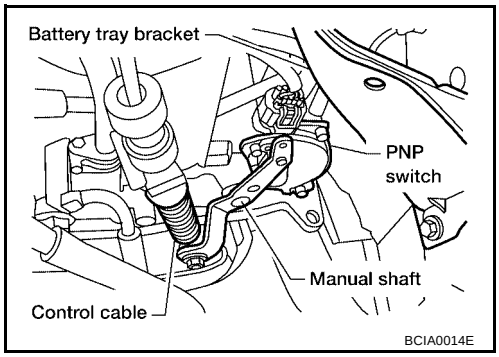

3. CHECK VEHICLE SPEED SENSOR·A/T AND VEHICLE SPEED SENSOR·MTR CIRCUIT

Check vehicle speed sensor·A/T (revolution sensor) and vehicle speed sensor·MTR circuit. Refer to AT-118, "DTC P0720 VEHICLE SPEED SENSOR·A/T (REVOLUTION SENSOR)" and AT-195, "DTC VEHICLE SPEED SENSOR MTR" .

OK or NG

OK >> GO TO 4.
NG >> Repair or replace vehicle speed sensor·A/T (revolution sensor) and vehicle speed sensor·MTR circuits.

4. CHECK ACCELERATOR PEDAL POSITION (APP) SENSOR

Check accelerator pedal position (APP) sensor. Refer to AT-178, "DTC P1705 THROTTLE POSITION SENSOR [ACCELERATOR PEDAL POSITION (APP) SENSOR]" .

OK or NG

OK >> GO TO 5.
NG >> Repair or replace accelerator pedal position (APP) sensor circuit.

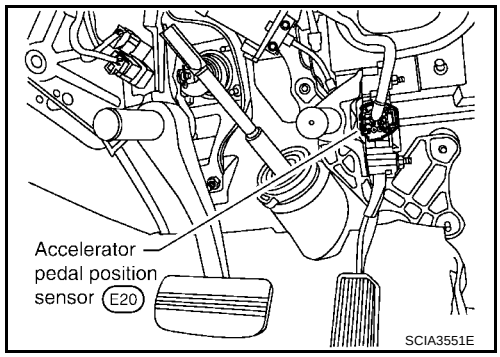

5. CHECK A/T FLUID CONDITION

1. Remove oil pan.
2. Check A/T fluid condition.

OK or NG

OK >> GO TO 7.
NG >> GO TO 6.

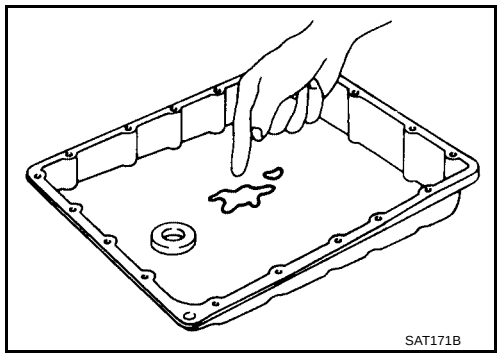

6. DETECT MALFUNCTIONING ITEM

1. Remove control valve assembly. Refer to AT-253, "Control Valve Assembly and Accumulators" .
2. Check the following items:
- Shift valve B
- Shift solenoid valve B
- Pilot valve
- Pilot filter
3. Disassemble A/T.
4. Check the following items:
- Servo piston assembly
- High clutch assembly
- Brake band

OK or NG

OK >> GO TO 8.
NG >> Repair or replace damaged parts.

7. DETECT MALFUNCTIONING ITEM

1. Remove control valve assembly. Refer to AT-253, "Control Valve Assembly and Accumulators" .
2. Check the following items:

- Shift valve B
- Shift solenoid valve B
- Pilot valve
- Pilot filter

OK or NG

OK >> GO TO 8.
NG >> Repair or replace damaged parts.

8. CHECK SYMPTOM

Check again.

OK or NG

OK >> **INSPECTION END**
NG >> GO TO 9.

9. CHECK TCM INSPECTION

1. Perform TCM input/output signal inspection. Refer to AT-96, "TCM Terminals and Reference Value" .
2. If NG, recheck TCM pin terminals for damage or loose connection with harness connector.

OK or NG

OK >> **INSPECTION END**
NG >> Repair or replace damaged parts.

A/T Does Not Shift: $D_3 \rightarrow D_4$

UCS000QS

SYMPTOM:

- **A/T does not shift from D_3 to D_4 at the specified speed.**
- **A/T must be warm before D_3 to D_4 shift will occur.**

1. CHECK SYMPTOM

Are “Vehicle Does Not Creep Forward in D or L Position” and “Vehicle Cannot Be Started From D_1” OK?

Yes or No

Yes >> GO TO 2.
No >> Go to AT-220, "Vehicle Does Not Creep Forward in D or L Position" and AT-222, "Vehicle Cannot Be Started From D_1" .

2. CHECK SELF-DIAGNOSTIC RESULTS

With CONSULT-II

Does self-diagnosis show damage to park/neutral position (PNP) switch, overdrive control switch, A/T fluid temperature sensor, vehicle speed sensor·A/T (revolution sensor), shift solenoid valve A or B, vehicle speed sensor·MTR circuits?

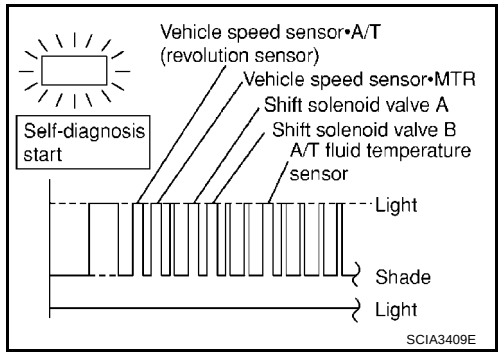

Yes >> Check damaged circuit. Refer to AT-106, "DTC P0705 PARK/NEUTRAL POSITION SWITCH" , AT-112, "DTC P0710 A/T FLUID TEMPERATURE SENSOR CIRCUIT" , AT-118, "DTC P0720 VEHICLE SPEED SENSOR·A/T (REVOLUTION SENSOR)" , AT-168, "DTC P0750

SHIFT SOLENOID VALVE A" , AT-173, "DTC P0755 SHIFT SOLENOID VALVE B" or AT-195, "DTC VEHICLE SPEED SENSOR MTR" .

No >> GO TO 3.

3. CHECK ACCELERATOR PEDAL POSITION (APP) SENSOR

Check accelerator pedal position (APP) sensor. Refer to AT-178, "DTC P1705 THROTTLE POSITION SENSOR [ACCELERATOR PEDAL POSITION (APP) SENSOR]" .

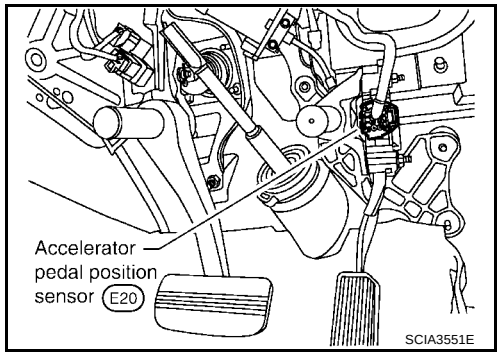

OK or NG

OK >> GO TO 4.
NG >> Repair or replace accelerator pedal position (APP) sensor circuit.

4. CHECK A/T FLUID CONDITION

1. Remove oil pan.
2. Check A/T fluid condition.

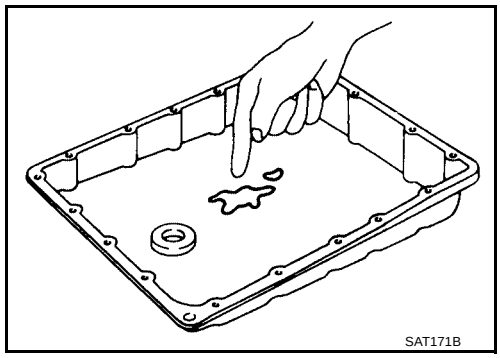

OK or NG

OK >> GO TO 6.
NG >> GO TO 5.

5. DETECT MALFUNCTIONING ITEM

1. Remove control valve assembly. Refer to AT-253, "Control Valve Assembly and Accumulators" .
2. Check the following items:
- Shift valve A
- Shift solenoid valve A
- Overrun clutch control valve
- Overrun clutch solenoid valve
- Pilot valve
- Pilot filter
3. Disassemble A/T.
4. Check the following items:
- Servo piston assembly
- Brake band

OK or NG

OK >> GO TO 7.
NG >> Repair or replace damaged parts.

6. DETECT MALFUNCTIONING ITEM

1. Remove control valve assembly. Refer to AT-253, "Control Valve Assembly and Accumulators" .
2. Check the following items:

- Shift valve A
- Shift solenoid valve A
- Overrun clutch control valve
- Overrun clutch solenoid valve
- Pilot valve
- Pilot filter

OK or NG

OK >> GO TO 7.
NG >> Repair or replace damaged parts.

7. CHECK SYMPTOM

Check again.

OK or NG

OK >> **INSPECTION END**
NG >> GO TO 8.

8. CHECK TCM INSPECTION

1. Perform TCM input/output signal inspection. Refer to AT-96, "TCM Terminals and Reference Value" .
2. If NG, recheck TCM pin terminals for damage or loose connection with harness connector.

OK or NG

OK >> **INSPECTION END**
NG >> Repair or replace damaged parts.

A/T Does Not Perform Lock-up

UCS000QT

SYMPTOM:
A/T does not perform lock-up at the specified speed.

1. CHECK SELF-DIAGNOSTIC RESULTS

Does self-diagnosis show damage to Vehicle speed sensor·A/T (revolution sensor), A/T fluid temperature sensor, Vehicle speed sensor·MTR, engine speed signal, torque converter clutch solenoid valve circuit after cruise test?

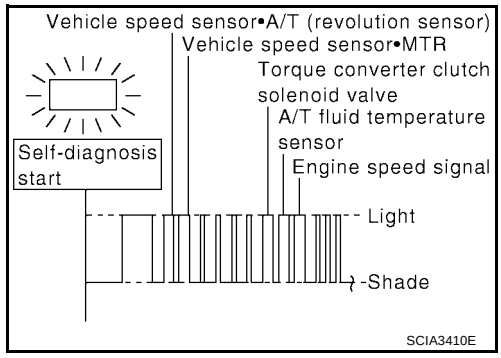

Yes or No

Yes >> Check damaged circuit. Refer to AT-118, "DTC P0720 VEHICLE SPEED SENSOR·A/T (REVOLUTION SENSOR)" , AT-112, "DTC P0710 A/T FLUID TEMPERATURE SENSOR CIRCUIT" , AT-195, "DTC VEHICLE SPEED SENSOR MTR" , AT-123, "DTC P0725 ENGINE SPEED SIGNAL" , AT-149, "DTC P0740 TORQUE CONVERTER CLUTCH SOLENOID VALVE" .
No >> GO TO 2.

2. CHECK ACCELERATOR PEDAL POSITION (APP) SENSOR

Check accelerator pedal position (APP) sensor. Refer to AT-178, "DTC P1705 THROTTLE POSITION SENSOR [ACCELERATOR PEDAL POSITION (APP) SENSOR]" .

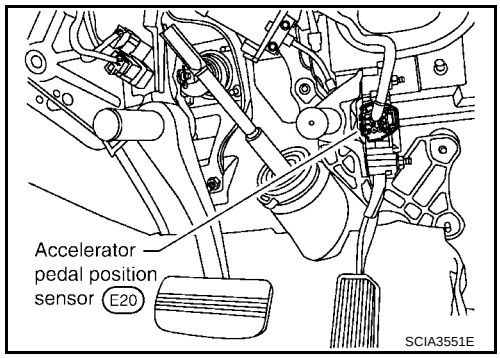

OK or NG

OK >> GO TO 3.
NG >> Repair or replace accelerator pedal position (APP) sensor circuit.

3. DETECT MALFUNCTIONING ITEM

1. Remove control valve. Refer to AT-253, "Control Valve Assembly and Accumulators" .
2. Check the following items:
- Torque converter clutch control valve
- Torque converter relief valve
- Pilot valve
- Pilot filter
3. Disassemble A/T.
4. Check the following items:
- Torque converter

OK or NG

OK >> GO TO 4.
NG >> Repair or replace damaged parts.

4. CHECK SYMPTOM

Check again.

OK or NG

OK >> **INSPECTION END**
NG >> GO TO 5.

5. CHECK TCM INSPECTION

1. Perform TCM input/output signal inspection. Refer to AT-96, "TCM Terminals and Reference Value" .
2. If NG, recheck TCM pin terminals for damage or loose connection with harness connector.

OK or NG

OK >> **INSPECTION END**
NG >> Repair or replace damaged parts.

A/T Does Not Hold Lock-up Condition

UCS000QU

SYMPTOM:
A/T does not hold lock-up condition for more than 30 seconds.

1. CHECK SELF-DIAGNOSTIC RESULTS

Does self-diagnosis show damage to engine speed signal circuit after cruise test?

Yes or No

Yes >> Check engine speed signal circuit. Refer to AT-123, "DTC P0725 ENGINE SPEED SIGNAL" .
No >> GO TO 2.

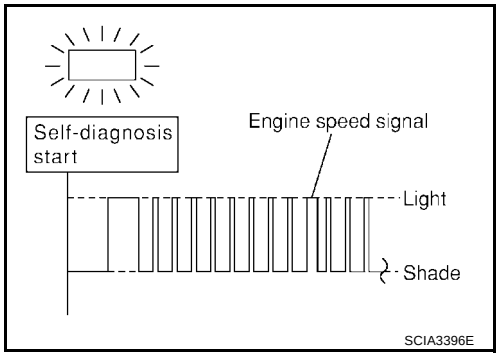

2. CHECK A/T FLUID CONDITION

1. Remove oil pan.
2. Check A/T fluid condition.

OK or NG

OK >> GO TO 4.
NG >> GO TO 3.

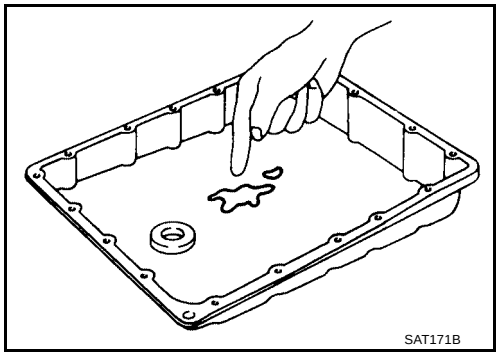

3. DETECT MALFUNCTIONING ITEM

1. Remove control valve assembly. Refer to AT-253, "Control Valve Assembly and Accumulators" .
2. Check the following items:
- Torque converter clutch control valve
- Pilot valve
- Pilot filter
3. Disassemble A/T.
4. Check torque converter and oil pump assembly.

OK or NG

OK >> GO TO 5.
NG >> Repair or replace damaged parts.

4. DETECT MALFUNCTIONING ITEM

1. Remove control valve assembly. Refer to AT-253, "Control Valve Assembly and Accumulators" .
2. Check the following items:
- Torque converter clutch control valve
- Pilot valve
- Pilot filter

OK or NG

OK >> GO TO 5.
NG >> Repair or replace damaged parts.

5. CHECK SYMPTOM

Check again.

OK or NG

OK >> **INSPECTION END**
NG >> GO TO 6.

6. CHECK TCM INSPECTION

1. Perform TCM input/output signal inspection. Refer to AT-96, "TCM Terminals and Reference Value" .
2. If NG, recheck TCM pin terminals for damage or loose connection with harness connector.

OK or NG

OK >> **INSPECTION END**
NG >> Repair or replace damaged parts.

Lock-up Is Not Released

UCS000QV

SYMPTOM:
Lock-up is not released when accelerator pedal is released.

1. CHECK CLOSED THROTTLE POSITION SIGNAL AND WIDE OPEN THROTTLE POSITION SIGNAL CIRCUIT

With CONSULT-II

Does “DATA MONITOR” show damage to “CLOSED THL/SW” and “W/O THRL/P-SW” circuit?

Without CONSULT-II

Does self-diagnosis show damage to closed throttle position signal and wide open throttle position signal circuit?

Yes or No

Yes >> Check closed throttle position signal and wide open throttle position signal circuit. Refer to AT-239, "TCM Self-diagnosis Does Not Activate" .
No >> GO TO 2.

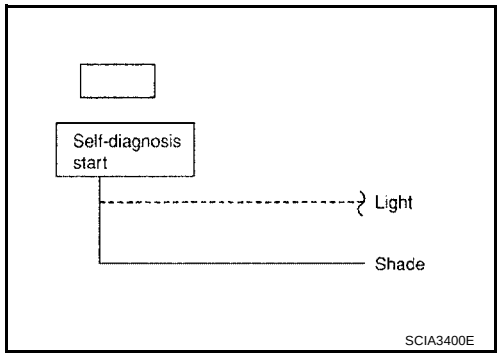

2. CHECK SYMPTOM

Check again.

OK or NG

OK >> **INSPECTION END**
NG >> GO TO 3.

3. CHECK TCM INSPECTION

1. Perform TCM input/output signal inspection. Refer to AT-96, "TCM Terminals and Reference Value" .
2. If NG, recheck TCM pin terminals for damage or loose connection with harness connector.

OK or NG

OK >> **INSPECTION END**
NG >> Repair or replace damaged parts.

Engine Speed Does Not Return To Idle (Light Braking D4 → D3)

UCS000QW

SYMPTOM:

- **Engine speed does not smoothly return to idle when A/T shifts from D4 to D3 .**
- **Vehicle does not decelerate by engine brake when turning overdrive control switch OFF.**
- **Vehicle does not decelerate by engine brake when shifting A/T from D to L position.**

1. CHECK SELF-DIAGNOSTIC RESULTS

Does self-diagnosis show damage to overrun clutch solenoid valve circuit after cruise test?

Yes or No

Yes >> Check overrun clutch solenoid valve circuit. Refer to AT-184, "DTC P1760 OVERRUN CLUTCH SOLENOID VALVE" .

No >> GO TO 2.

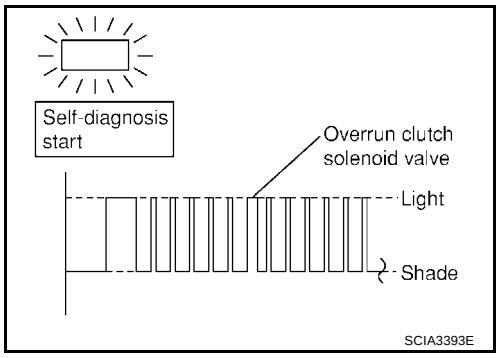

2. CHECK ACCELERATOR PEDAL POSITION (APP) SENSOR

Check accelerator pedal position (APP) sensor. Refer to AT-178, "DTC P1705 THROTTLE POSITION SENSOR [ACCELERATOR PEDAL POSITION (APP) SENSOR]" .

OK or NG

OK >> GO TO 3.

NG >> Repair or replace accelerator pedal position (APP) sensor circuit.

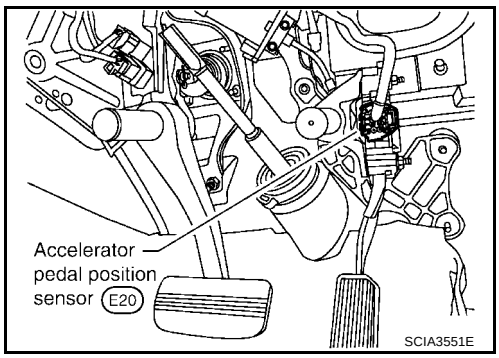

3. CHECK A/T FLUID CONDITION

1. Remove oil pan.
2. Check A/T fluid condition.

OK or NG

OK >> GO TO 5.

NG >> GO TO 4.

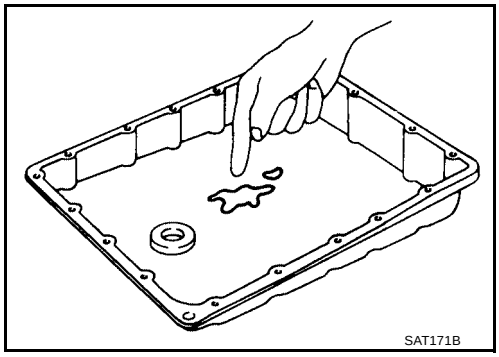

4. DETECT MALFUNCTIONING ITEM

1. Remove control valve assembly. Refer to AT-253, "Control Valve Assembly and Accumulators" .
2. Check the following items:
- Overrun clutch control valve
- Overrun clutch reducing valve
- Overrun clutch solenoid valve
3. Disassemble A/T.
4. Check the following items:
- Overrun clutch assembly

OK or NG

OK >> GO TO 6.
NG >> Repair or replace damaged parts.

5. DETECT MALFUNCTIONING ITEM

1. Remove control valve assembly. Refer to AT-253, "Control Valve Assembly and Accumulators" .
2. Check the following items:
- Overrun clutch control valve
- Overrun clutch reducing valve
- Overrun clutch solenoid valve

OK or NG

OK >> GO TO 6.
NG >> Repair or replace damaged parts.

6. CHECK SYMPTOM

Check again.

OK or NG

OK >> **INSPECTION END**
NG >> GO TO 7.

7. CHECK TCM INSPECTION

1. Perform TCM input/output signal inspection. Refer to AT-96, "TCM Terminals and Reference Value" .
2. If NG, recheck TCM pin terminals for damage or loose connection with harness connector.

OK or NG

OK >> **INSPECTION END**
NG >> Repair or replace damaged parts.

Vehicle Does Not Start From D1

UCS000QX

SYMPTOM:
Vehicle does not start from D1 on Cruise test — Part 2.

1. CHECK SELF-DIAGNOSTIC RESULTS

Does self-diagnosis show damage to vehicle speed sensor·A/T (revolution sensor), shift solenoid valve A, B or vehicle speed sensor·MTR after cruise test?

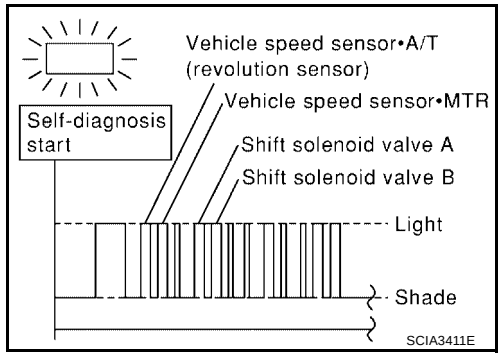

Yes or No

Yes >> Check damaged circuit. Refer to AT-118, "DTC P0720 VEHICLE SPEED SENSOR·A/T (REVOLUTION SENSOR)" , AT-168, "DTC P0750 SHIFT SOLENOID VALVE A" , AT-173, "DTC P0755 SHIFT SOLENOID VALVE B" or AT-195, "DTC VEHICLE SPEED SENSOR MTR" .

No >> GO TO 2.

2. CHECK SYMPTOM

Check again.

OK or NG

OK >> Go to AT-222, "Vehicle Cannot Be Started From D1" .

NG >> GO TO 3.

3. CHECK TCM INSPECTION

1. Perform TCM input/output signal inspection. Refer to AT-96, "TCM Terminals and Reference Value" .
2. If NG, recheck TCM pin terminals for damage or loose connection with harness connector.

OK or NG

OK >> **INSPECTION END**

NG >> Repair or replace damaged parts.

A/T Does Not Shift: D4 → D3 , When Overdrive Control Switch ON → OFF

UCS000QY

SYMPTOM:
A/T does not shift from D4 to D3 when changing overdrive control switch to “OFF” position.

1. CHECK OVERDRIVE CONTROL SWITCH CIRCUIT

With CONSULT-II

Does “DATA MONITOR” show damage to overdrive control switch circuit?

Without CONSULT-II

Does self-diagnosis show damage to overdrive control switch circuit?

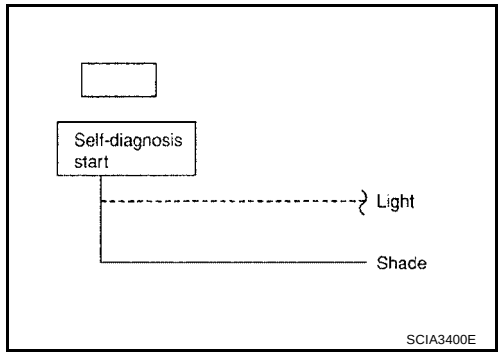

Yes or No

Yes >> Check overdrive control switch circuit. Refer to AT-239, "TCM Self-diagnosis Does Not Activate" .

No >> Go to AT-226, "A/T Does Not Shift: D2 → D3" .

A/T Does Not Shift: D3 → L2 , When Selector Lever D → L Position

UCS000QZ

SYMPTOM:
A/T does not shift from D3 to L2 when changing selector lever from D to L position.

1. CHECK PARK/NEUTRAL POSITION (PNP) SWITCH CIRCUIT

With CONSULT-II
Does “DATA MONITOR” show damage to park/neutral position (PNP) switch circuit?

Without CONSULT-II
Does self-diagnosis show damage to park/neutral position (PNP) switch circuit?

Yes or No

Yes >> Check park/neutral position (PNP) switch circuit. Refer to AT-106, "DTC P0705 PARK/NEUTRAL POSITION SWITCH" .

No >> Go to AT-224, "A/T Does Not Shift: D1 → D2 or Does Not Kickdown: D4 → D2" .

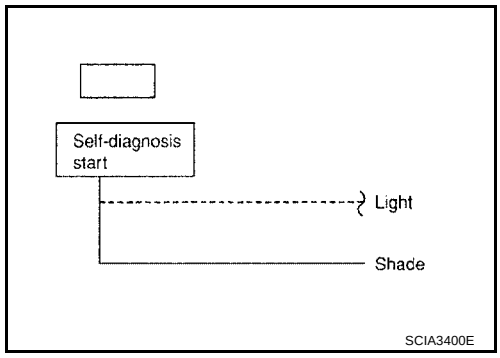

Vehicle Does Not Decelerate By Engine Brake

UCS000R1

SYMPTOM:
Vehicle does not decelerate by engine brake when shifting from D3 to L2 .

1. CHECK PARK/NEUTRAL POSITION (PNP) SWITCH CIRCUIT

With CONSULT-II
Does “DATA MONITOR” show damage to park/neutral position (PNP) switch circuit?

Without CONSULT-II
Does self-diagnosis show damage to park/neutral position (PNP) switch circuit?

Yes or No

Yes >> Check park/neutral position (PNP) switch. Refer to AT-106, "DTC P0705 PARK/NEUTRAL POSITION SWITCH" .

No >> GO TO 2.

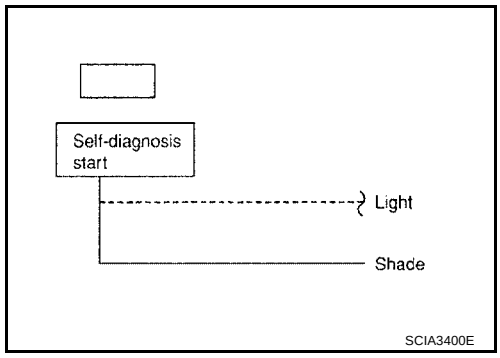

2. ADJUST CONTROL CABLE

Check control cable. Refer to AT-258, "Control Cable Adjustment"

OK or NG

OK >> GO TO 3.

NG >> Adjust control cable. Refer to AT-258, "Control Cable Adjustment" .

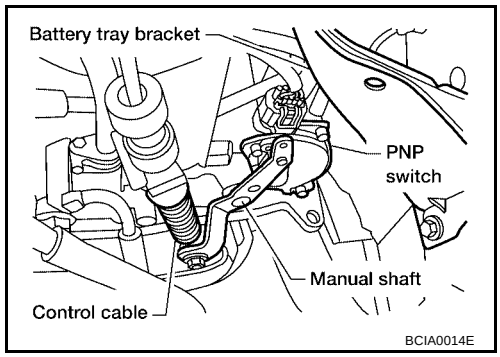

3. CHECK VEHICLE SPEED SENSOR·A/T AND VEHICLE SPEED SENSOR·MTR CIRCUIT

Check vehicle speed sensor·A/T (revolution sensor) and vehicle speed sensor·MTR circuit. Refer to AT-118, "DTC P0720 VEHICLE SPEED SENSOR·A/T (REVOLUTION SENSOR)" and AT-195, "DTC VEHICLE SPEED SENSOR MTR" .

OK or NG

OK >> GO TO 4.
NG >> Repair or replace vehicle speed sensor·A/T (revolution sensor) and vehicle speed sensor·MTR circuits.

4. CHECK A/T FLUID CONDITION

1. Remove oil pan.
2. Check A/T fluid condition.

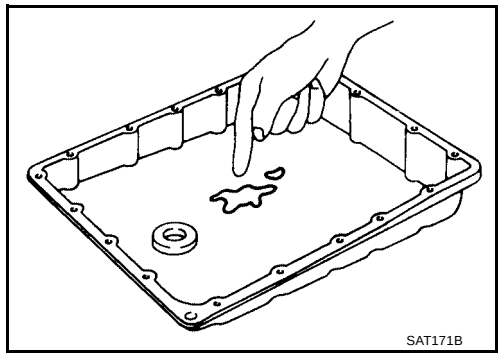

OK or NG

OK >> GO TO 6.
NG >> GO TO 5.

5. DETECT MALFUNCTIONING ITEM

1. Remove control valve assembly. Refer to AT-253, "Control Valve Assembly and Accumulators" .
2. Check the following items:
- Shift valve A
- Overrun clutch solenoid valve
3. Disassemble A/T.
4. Check the following items:
- Overrun clutch assembly
- Low & reverse brake assembly

OK or NG

OK >> GO TO 6.
NG >> Repair or replace damaged parts.

6. CHECK SYMPTOM

Check again.

OK or NG

OK >> **INSPECTION END**
NG >> GO TO 7.

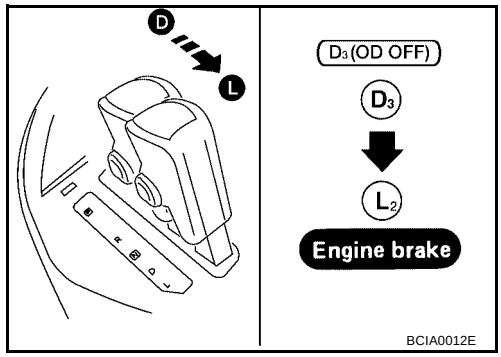

7. CHECK TCM INSPECTION

1. Perform TCM input/output signal inspection. Refer to AT-96, "TCM Terminals and Reference Value" .
2. If NG, recheck TCM pin terminals for damage or loose connection with harness connector.

OK or NG

OK >> **INSPECTION END**
NG >> Repair or replace damaged parts.

TCM Self-diagnosis Does Not Activate

UCS000R2

SYMPTOM:
O/D OFF indicator lamp does not come on in TCM self-diagnostic procedure even if the lamp circuit is good.

DESCRIPTION

- **Park/neutral position (PNP) switch**
  The park/neutral (PNP) switch assembly includes a transmission range switch. The transmission range switch detects the selector lever position and sends a signal to the TCM.

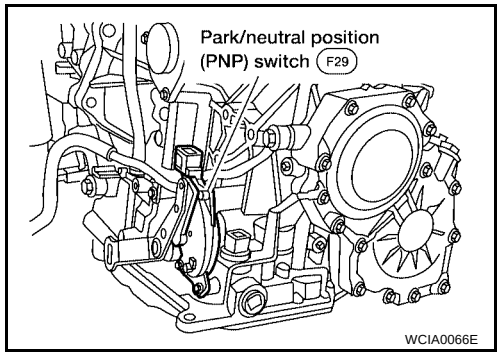

- **Overdrive control switch**
  Detects the overdrive control switch position (ON or OFF) and sends the signal via CAN communication to the TCM from combination meter.

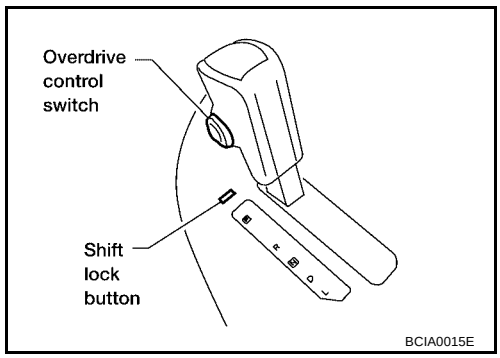

- **Closed throttle position signal and wide-open throttle position signal**
  ECM judges throttle opening based on a signal from accelerator pedal position (APP) sensor, and sends the signal via CAN communication to TCM

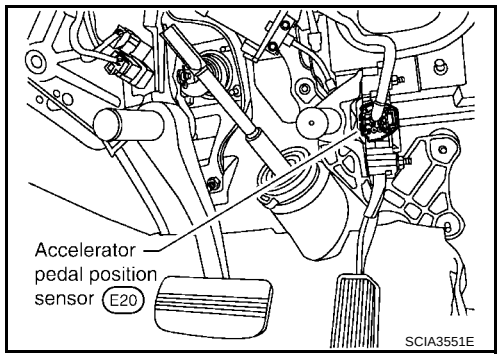

DIAGNOSTIC PROCEDURE

1. INSPECTION START

Do you have CONSULT-II?

Yes or No

Yes >> GO TO 2.
No >> GO TO 3.

2. CHECK PARK/NEUTRAL POSITION (PNP) SWITCH CIRCUIT (WITH CONSULT-II)

With CONSULT-II

1. Turn ignition switch to “ON” position. (Do not start engine.)
2. Select “DATA MONITOR” mode for “A/T” with CONSULT-II.
3. Read out P/N, R, D, 2nd position switches moving selector lever to each position.
   Check that the signal of the selector lever position is indicated properly.

   NOTE:
   “2 POSITION SW” indicates L position status.

OK or NG

OK >> GO TO 8.
NG >> GO TO 4.

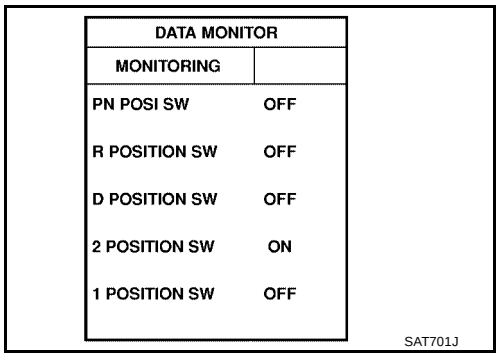

DATA MONITOR	
MONITORING	
PN POSI SW	OFF
R POSITION SW	OFF
D POSITION SW	OFF
2 POSITION SW	ON
1 POSITION SW	OFF

SAT701J

3. CHECK PARK/NEUTRAL POSITION (PNP) SWITCH CIRCUIT (WITHOUT CONSULT-II)

Without CONSULT-II

1. Turn ignition switch to ON position. (Do not start engine.)
2. Check voltage between TCM harness connector E143 terminals 27 (P/B), 34 (G), 35 (G/W), 36 (R/G) and ground while moving selector lever through each position.

Lever Position	Terminal			
	36	35	34	27
P, N	**B**	0	0	0
R	0	**B**	0	0
D	0	0	**B**	0
L	0	0	0	**B**

B: Battery voltage
0: 0V

OK or NG

OK >> GO TO 9.
NG >> GO TO 4.

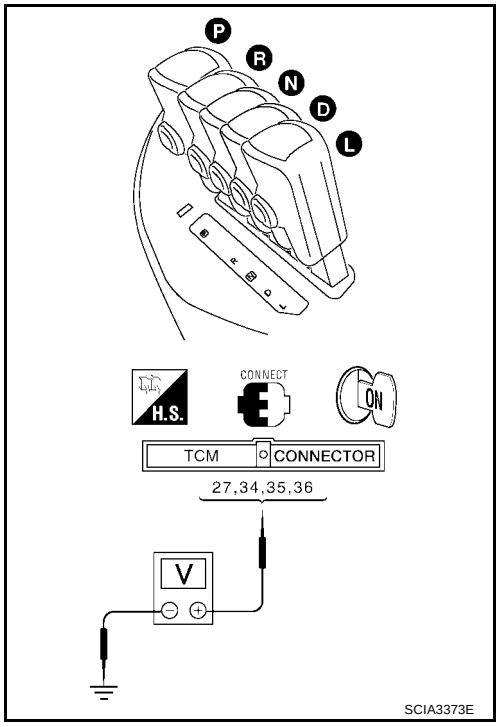

SCIA3373E

4. CHECK PARK/NEUTRAL POSITION (PNP) SWITCH

Check the following item:

- Park/neutral position (PNP) switch
  Check continuity between PNP switch harness connector F29 terminals 1 and 2 and between terminals 3 and 5, 6, 7, 8 and 9 while moving manual shaft through each position.

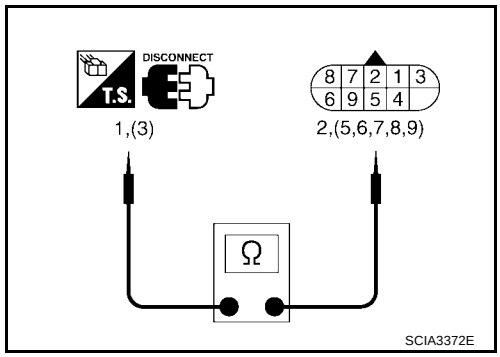

Lever position	Terminal	
P	3 - 7	1 - 2
R	3 - 8	
N	3 - 9	1 - 2
D	3 - 6	
L	3 - 5	

OK or NG

OK >> GO TO 7.
NG >> GO TO 5.

5. CHECK MANUAL CONTROL CABLE ADJUSTMENT

Check PNP switch again with manual control cable disconnected from manual shaft of A/T assembly. Refer to test group 2 (With CONSULT-II) or 7 (With out CONSULT-II).

OK or NG

OK >> Adjust manual control cable. Refer to AT-258, "Control Cable Adjustment" .
NG >> GO TO 6.

6. CHECK PNP SWITCH ADJUSTMENT

Remove PNP switch from A/T assembly and check continuity of PNP switch terminals. Refer to test group 3.

OK or NG

OK >> Adjust PNP switch. Refer to AT-255, "Park/Neutral Position (PNP) Switch Adjustment" .
NG >> Repair or replace PNP switch.

7. DETECT MALFUNCTIONING ITEM

Check the following items:

- Fuse
- Harness for short or open between ignition switch and park/neutral position (PNP) switch
- Harness for short or open between park/neutral position (PNP) switch and TCM
- Harness for short or open between park/neutral position (PNP) switch and combination meter
- Harness for short or open between combination meter and TCM
- Ignition switch
  Refer to PG-4, "POWER SUPPLY ROUTING CIRCUIT" .

OK or NG

OK (With CONSULT-II)>>GO TO 8.
OK (Without CONSULT-II)>>GO TO 9.
NG >> Repair or replace damaged parts.

8. CHECK OVERDRIVE CONTROL SWITCH CIRCUIT (WITH CONSULT-II)

With CONSULT-II

1. Turn ignition switch to “ON” position. (Do not start engine.)
2. Select “DATA MONITOR” mode for “A/T” with CONSULT-II.
3. Read out “OVERDRIVE SW”.
   Check the signal of the overdrive control switch is indicated properly.
   (Overdrive switch “ON” displayed on CONSULT-II means overdrive “OFF”.)

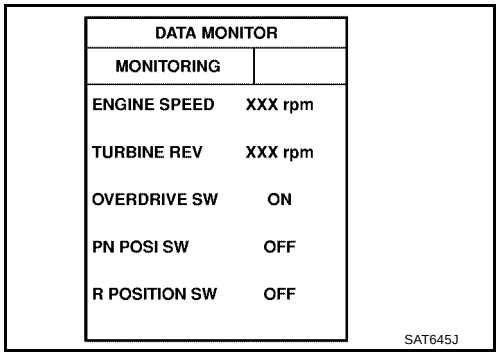

OK or NG

OK >> GO TO 10.
NG >> GO TO 9.

9. CHECK OVERDRIVE CONTROL SWITCH

Check the following item:

- Overdrive control switch
- Check continuity between A/T device (overdrive control switch) harness connector M34 terminals 1 and 2.

Switch position	Continuity
ON	No
OFF	Yes

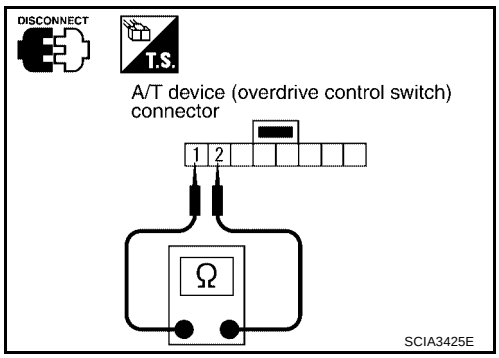

OK or NG

OK >> GO TO 10.
NG >> Repair or replace damaged parts.

10. DETECT MALFUNCTIONING ITEM

Check the following items:

- Harness for short or open between combination meter and A/T device (overdrive control switch)
- Harness of ground circuit for A/T device (overdrive control switch) for short or open
- Combination meter
  Refer to DI-5, "COMBINATION METERS" .

OK or NG

OK (With CONSULT-II)>>GO TO 11.
OK (Without CONSULT-II)>>GO TO 12.
NG >> Repair or replace damaged parts.

11. CHECK CLOSED THROTTLE POSITION AND WIDE OPEN THROTTLE POSITION SIGNAL CIRCUIT (WITH CONSULT-II)

With CONSULT-II

1. Turn ignition switch to “ON” position. (Do not start engine.)
2. Select “DATA MONITOR” mode for A/T with CONSULT-II.
3. Read out “CLOSED THL/SW” and “W/O THRL-SW” depressing and releasing accelerator pedal. Check the signal of throttle position signal is indicated properly.

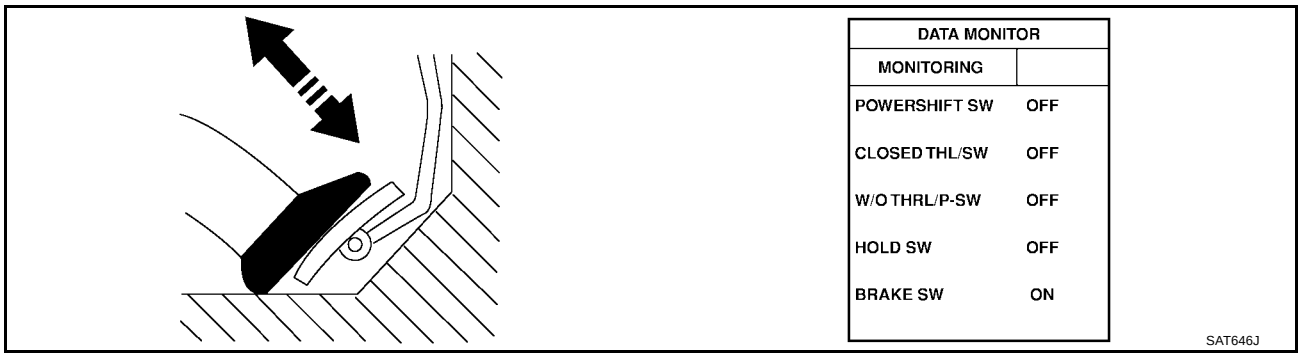

Accelerator pedal condition	Data monitor	
	CLOSED THL/SW	W/O THRL-SW
Released	ON	OFF
Fully depressed	OFF	ON

OK or NG

OK >> GO TO 13.
NG >> Check the following items. If any items are damaged, repair or replace damaged parts.
- Accelerator pedal position (APP) sensor — Refer to AT-178, "DTC P1705 THROTTLE POSITION SENSOR [ACCELERATOR PEDAL POSITION (APP) SENSOR]" .
- Harness for short or open between accelerator pedal position sensor and ECM

12. CHECK CLOSED THROTTLE POSITION AND WIDE OPEN THROTTLE POSITION SIGNAL CIRCUIT (WITHOUT CONSULT-II)

Without CONSULT-II

Check the following items:

- Accelerator pedal position sensor — Refer to AT-178, "DTC P1705 THROTTLE POSITION SENSOR [ACCELERATOR PEDAL POSITION (APP) SENSOR]" .
- Harness for short or open between accelerator pedal position sensor and ECM

OK or NG

OK >> GO TO 13.
NG >> Repair or replace damaged parts.

13. CHECK SYMPTOM

Check again.

OK or NG

OK >> **INSPECTION END**
NG >> GO TO 14.

14. CHECK TCM INSPECTION

1. Perform TCM input/output signal inspection. Refer to AT-96, "TCM Terminals and Reference Value" .
2. If NG, recheck TCM pin terminals for damage or loose connection with harness connector.

OK or NG

OK >> **INSPECTION END**
NG >> Repair or replace damaged parts.

A/T SHIFT LOCK SYSTEM

PFP:34950

Description

UCS00161

- The mechanical key interlock mechanism also operates as a shift lock:
  With the ignition switch turned to ON, the selector lever cannot be shifted from “P” (parking) to any other position unless the brake pedal is depressed.
  With the key removed, the selector lever cannot be shifted from “P” to any other position.
  The key cannot be removed unless the selector lever is placed in “P”.
- The shift lock and key interlock mechanisms are controlled by the ON-OFF operation of the shift lock solenoid and by the operation of the rotator and slider located inside the key cylinder.

Shift Lock System Electrical Parts Location

UCS00162

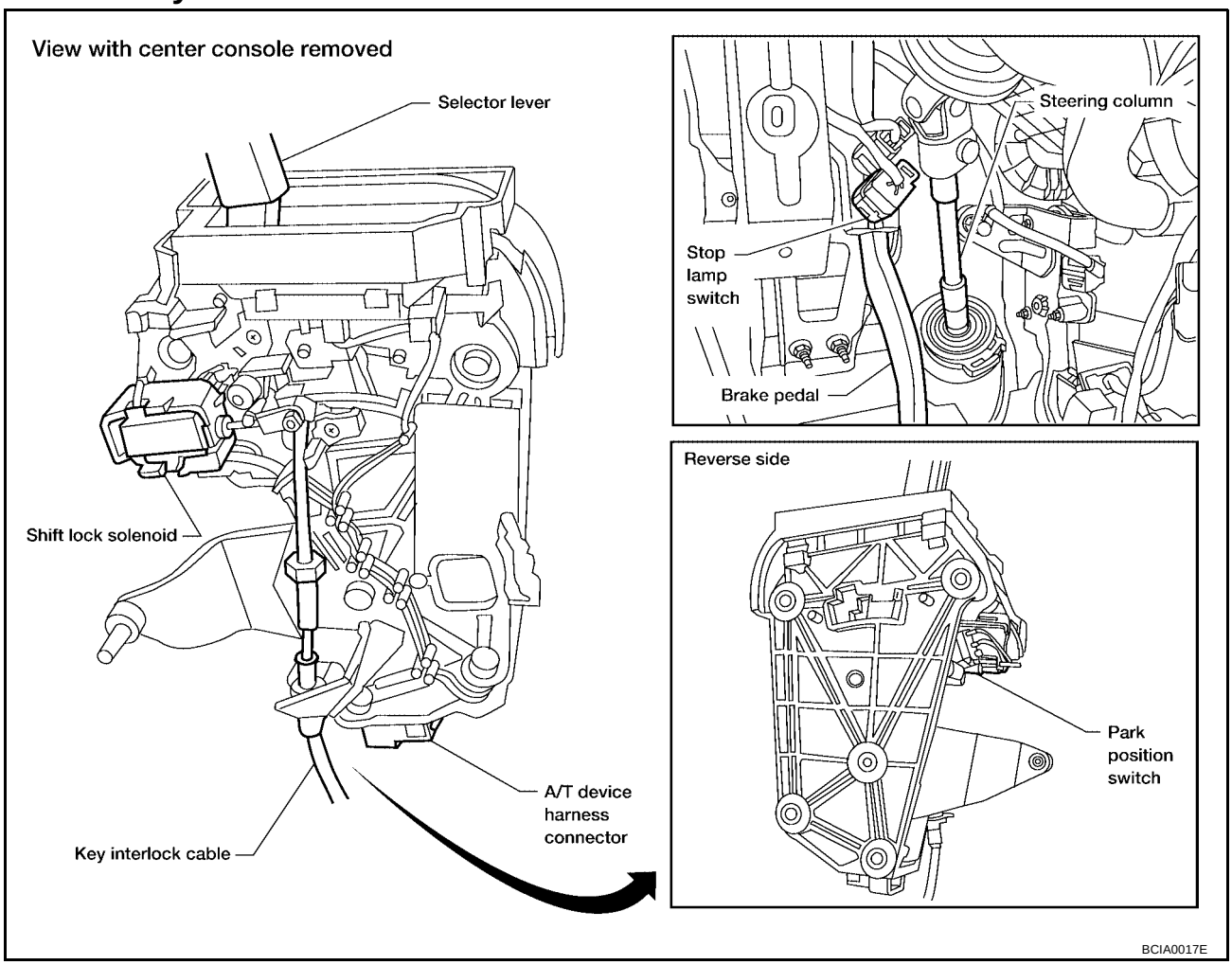

Wiring Diagram — AT — SHIFT

UCS00163

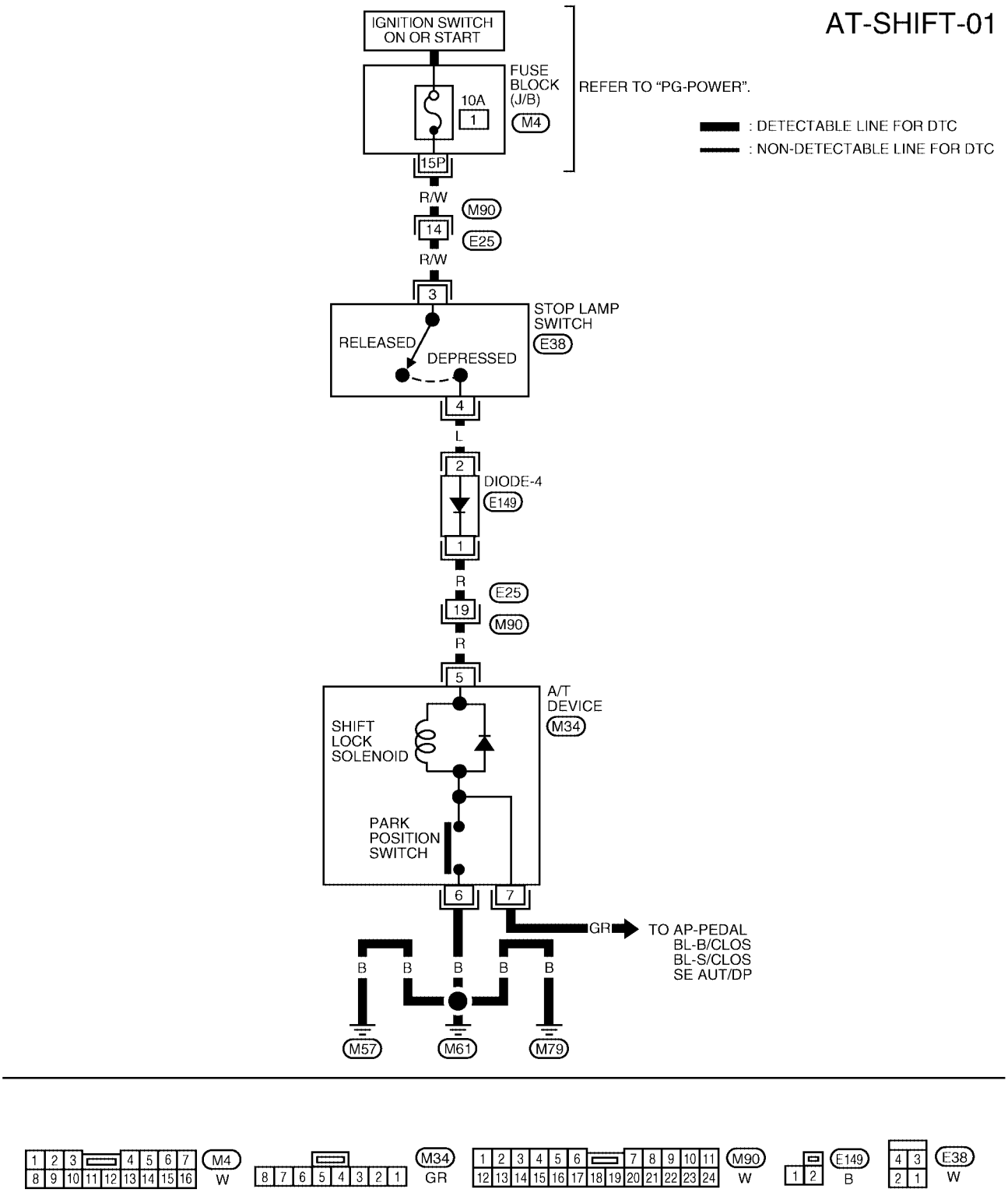

Diagnostic Procedure

UCS00164

SYMPTOM 1:

- **Selector lever cannot be moved from “P” position with key in ON position and brake pedal applied.**
- **Selector lever can be moved from “P” position with key in ON position and brake pedal released.**
- **Selector lever can be moved from “P” position when key is removed from key cylinder.**

SYMPTOM 2:

- **Ignition key cannot be removed when selector lever is set to “P” position.**
- **Ignition key can be removed when selector lever is set to any position except “P”.**

1. CHECK KEY INTERLOCK CABLE

Check the key interlock cable for damage.

OK or NG

OK >> GO TO 2.
NG >> Repair key interlock cable. Refer to AT-251, "KEY INTERLOCK CABLE" .

2. CHECK SELECTOR LEVER POSITION

Check the selector lever position for damage.

OK or NG

OK >> GO TO 3.
NG >> Check selector lever. Refer to AT-258, "Control Cable Adjustment" .

3. CHECK SHIFT LOCK SOLENOID AND PARK POSITION SWITCH

1. Connect A/T device harness connector.
2. Turn ignition switch “ON”.
3. Selector lever is set in “P” position.
4. Check operation sound.

Condition	Brake pedal	Operation sound
When ignition switch is turned to “ON” position and selector lever is set in “P” position.	Depressed	Yes
	Released	No

OK or NG

OK >> **INSPECTION END**
NG >> GO TO 4.

4. CHECK POWER SOURCE

1. Turn ignition switch “ON”. (Do not start engine.)
2. Check the voltage between A/T device harness connector M34 terminal 5 (R) and ground.

Condition	Brake pedal	Data (Approx.)
When ignition switch is turned to “ON” position.	Depressed	Battery voltage
	Released	0V

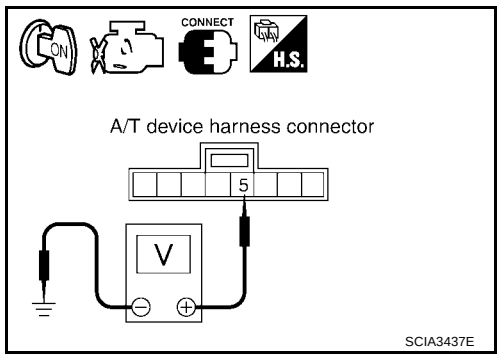

OK or NG

OK >> GO TO 7.
NG >> GO TO 5.

5. CHECK STOP LAMP SWITCH

1. Turn ignition switch “OFF”.
2. Disconnect stop lamp switch harness connector.
3. Check continuity between stop lamp switch harness connector E38 terminals 3 and 4.

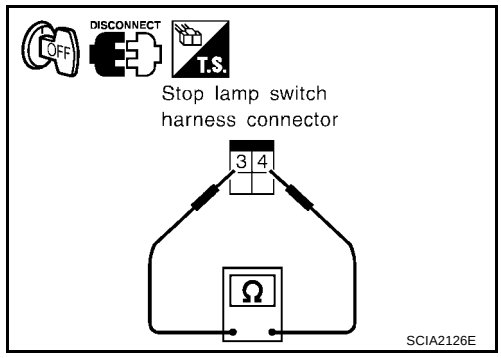

Condition	Continuity
When brake pedal is depressed	Yes
When brake pedal is released	No

Check stop lamp switch after adjusting brake pedal — refer to BR-6, "BRAKE PEDAL" .

OK or NG

OK >> GO TO 6.
NG >> Repair or replace damaged parts.

6. DETECT MALFUNCTIONING ITEM

Check the following items. If any items are damaged, repair or replace damaged parts.

- 10A fuse [No.1, located in the fuse block (J/B)]
- Harness for short or open between ignition switch and stop lamp switch harness connector E38 terminal 3 (R/W)
- Harness for short or open between stop lamp switch harness connector E38 terminal 4 (L) and diode-4 harness connector E149 terminal 2 (L).
- Harness for short or open between diode-4 harness connector E149 terminal 1 (R) and A/T device harness connector M34 terminal 5 (R).
- Diode-4
- Ignition switch (Refer to PG-4, "POWER SUPPLY ROUTING CIRCUIT" .)

OK or NG

OK >> GO TO 7.
NG >> Repair or replace damaged parts.

7. CHECK GROUND CIRCUIT

1. Turn ignition switch “OFF”.
2. Disconnect A/T device harness connector.
3. Check continuity between A/T device harness connector M34 terminal 6 (B) and ground.

   Continuity should exist.

4. Connect A/T device harness connector.

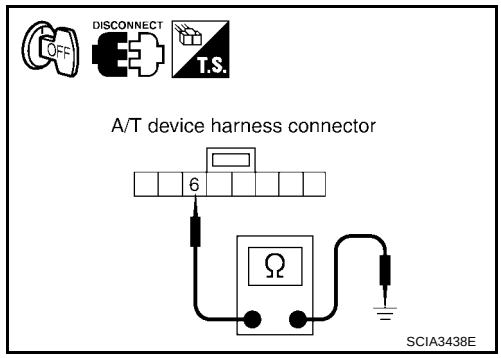

OK or NG

OK >> Replace shift lock solenoid or park position switch.
NG >> Repair open circuit or short to ground or short to power in harness or connectors.

SHIFT CONTROL SYSTEM

PFP:34901

Removal and Installation

UCS0024G

CONTROL DEVICE

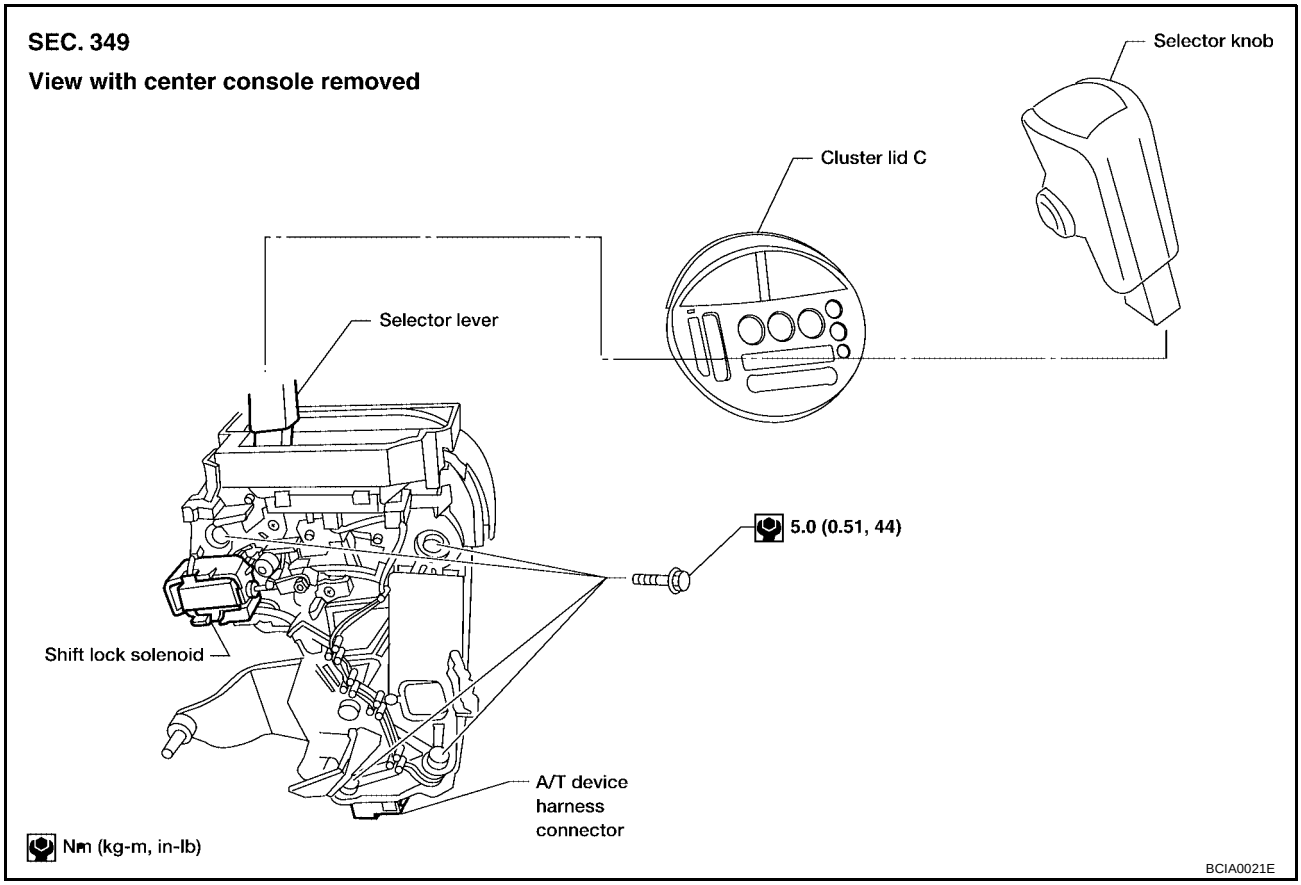

SELECTOR KNOB

REMOVAL

1. Slide the selector knob cover downwards with fingers to reveal the selector knob latch.
2. Gently pry the selector knob latch outward to release then lift the selector knob up to remove.

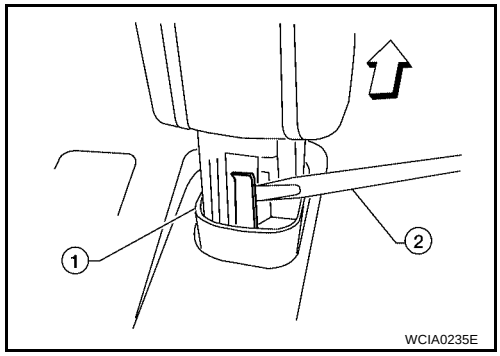

INSTALLATION

Set the selector knob in place on the selector lever and push downward until the selector knob latch engages.

Control Cable

UCS000R9

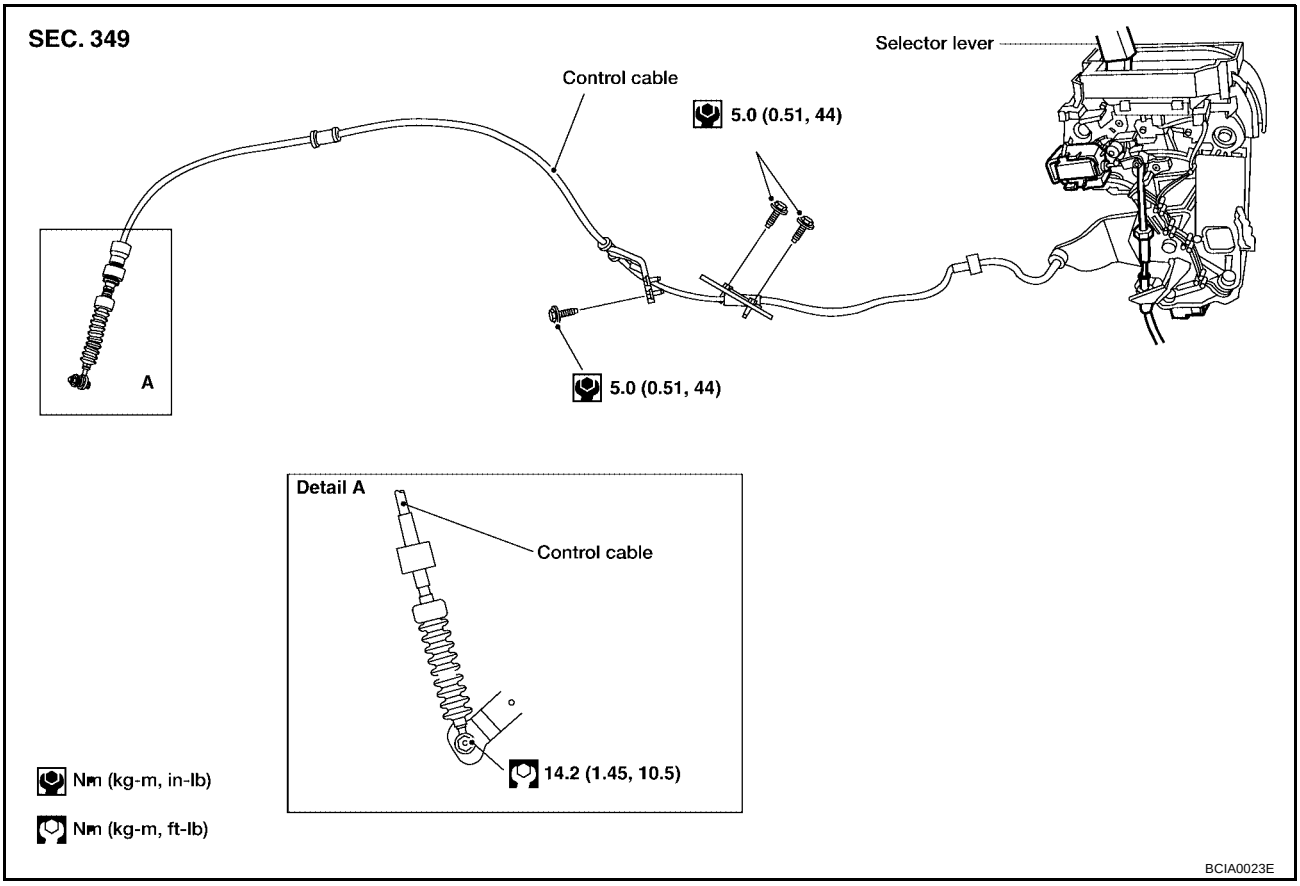

KEY INTERLOCK CABLE

PFP:34908

Components

UCS001EH

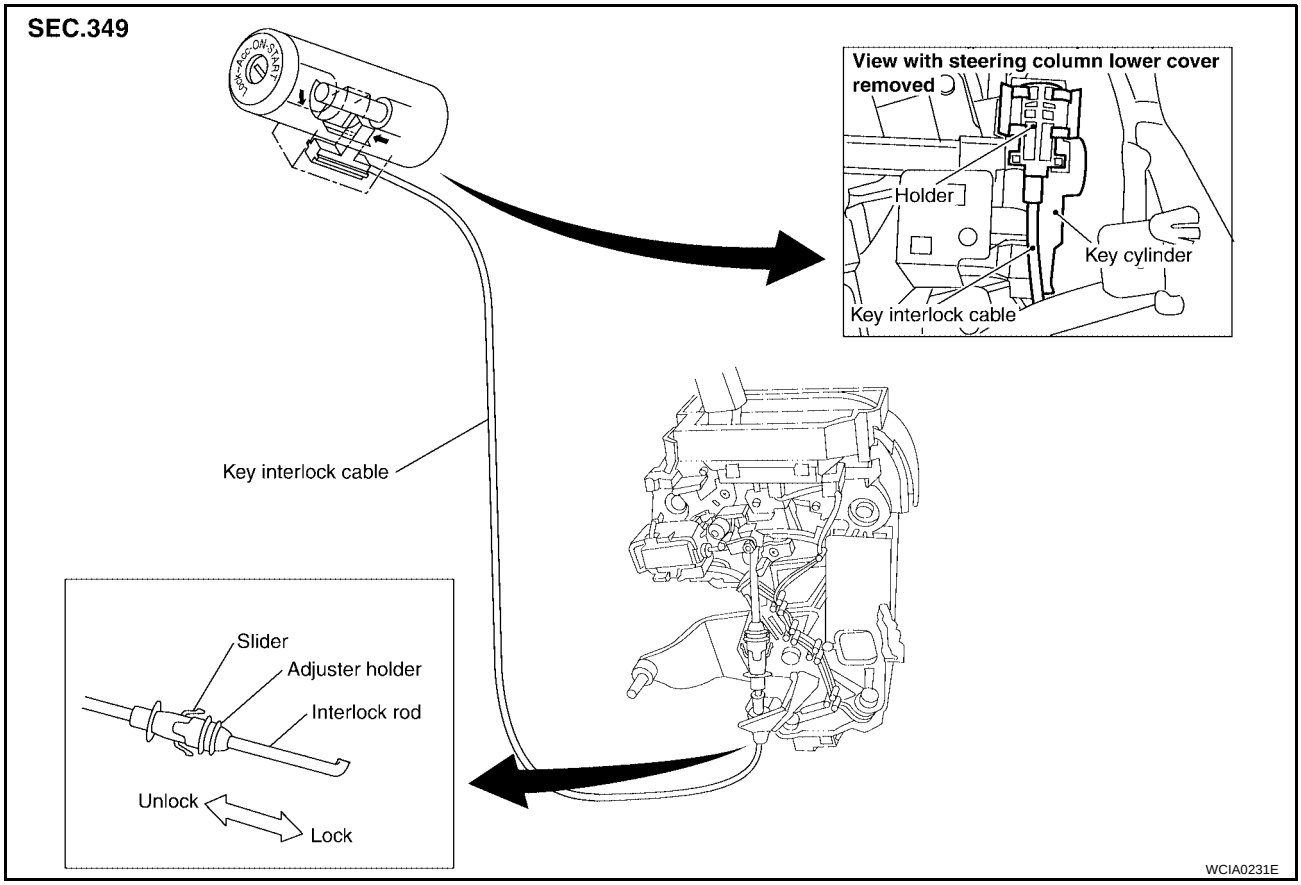

CAUTION:

- **Install key interlock cable in such a way that it will not be damaged by sharp bends, twists or interference with adjacent parts.**
- **After installing key interlock cable to control device, make sure that casing cap and bracket are firmly secured in their positions. If casing cap be removed with an external load of less than 39.2 N (4.0 kg, 8.8 lb), replace key interlock cable with new one.**

Removal

UCS001EI

1. Unlock slider by squeezing lock tabs on slider from adjuster holder.
2. Remove casing cap from bracket of control device and remove interlock rod from cable.

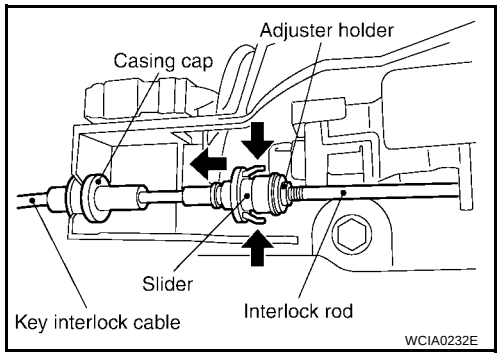

3. Remove holder from key cylinder and remove key interlock cable.

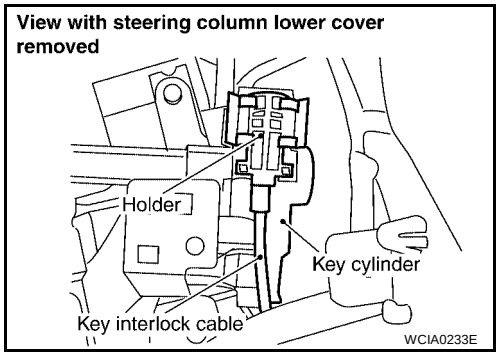

Installation

UCS001EJ

1. Set key interlock cable to key cylinder and install holder.
2. Turn ignition key to lock position.
3. Set selector lever to P position.

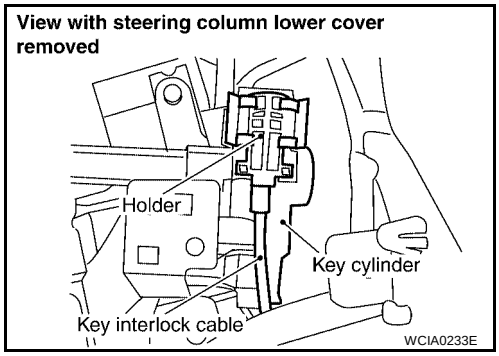

4. Insert interlock rod into adjuster holder.
5. Install casing cap to bracket.
6. Move slider in order to fix adjuster holder to interlock rod.

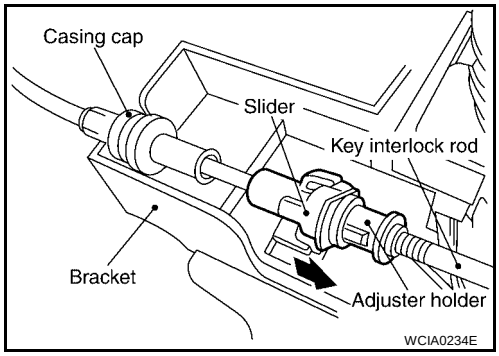

ON-VEHICLE SERVICE

PFP:00000

Control Valve Assembly and Accumulators

UCS000RA

REMOVAL

1. Drain ATF from transaxle. Refer to MA-23, "Changing A/T Fluid" .
2. Remove oil pan using power tools, and gasket.
   - **Do not reuse oil pan bolts.**

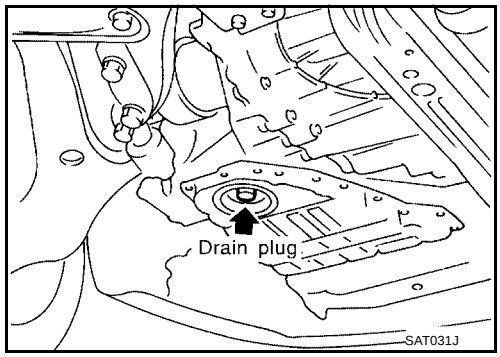

3. Disconnect terminal cord assembly harness connector.

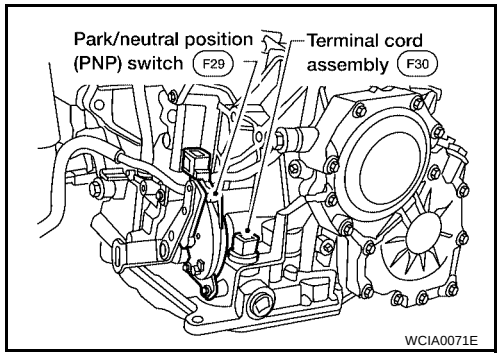

4. Remove stopper ring from terminal cord assembly harness terminal body.
5. Remove terminal cord assembly harness from transmission case by pushing on terminal body.

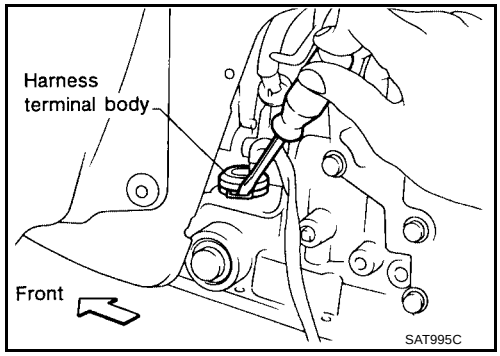

6. Remove control valve assembly by removing fixing bolts **I** , **X** and ●.
   Bolt length, number and location are shown in the illustration.

   CAUTION:
   Be careful not to drop manual valve and servo release accumulator return spring.

7. Disassemble and inspect control valve assembly if necessary. Refer to AT-290, "Control Valve Assembly" .

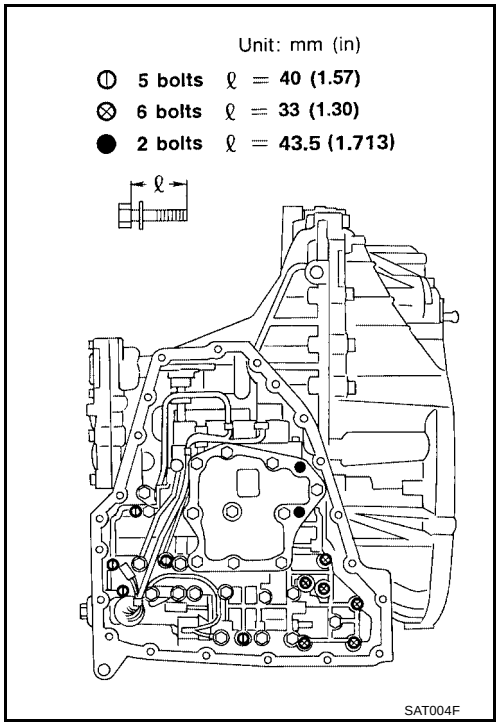

8. Remove servo release and N-D accumulators by applying compressed air if necessary.
   - **Hold each piston with a rag.**

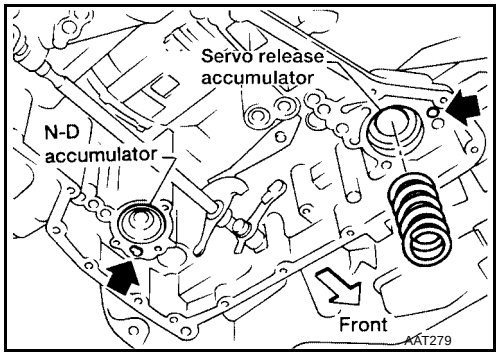

INSTALLATION

Note the following, and installation is in the reverse order of removal.

- **Set manual shaft in Neutral, then align manual plate with groove in manual valve.**
- **After installing control valve assembly, make sure that selector lever can be moved to all positions.**

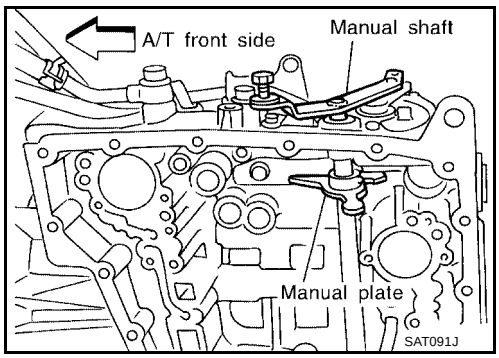

Revolution Sensor Replacement

ECS00DZ6

1. Disconnect electrical connector.
2. Remove revolution sensor from A/T.
3. Installation is in the reverse order of removal.

CAUTION:
- **Do not reuse O-ring.**
- **Apply petroleum jelly to O-ring.**
- **Be careful not to mis-connect because shape of connectors are same as turbine revolution sensor (power train revolution sensor).**

NOTE:
To prevent mis-connect, revolution sensor harness connector is color taped for identification.

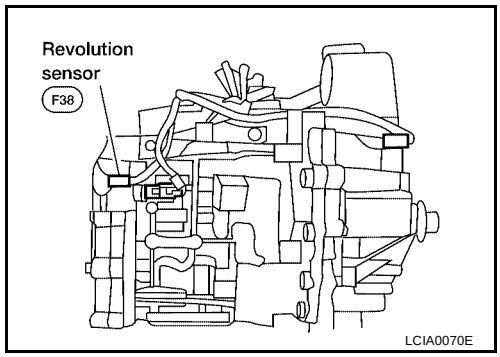

Turbine Revolution Sensor (Power Train Revolution Sensor) Replacement

ECS00DZ7

1. Disconnect electrical connector.
2. Remove bolt, and turbine revolution sensor (power train revolution sensor) from A/T.
3. Installation is in the reverse order of removal.

CAUTION:
- **Do not reuse O-ring.**
- **Apply petroleum jelly to O-ring.**
- **Be careful not to mis-connect because shape of connectors are same as revolution sensor.**

NOTE:
To prevent mis-connection, revolution sensor harness connector is color taped for identification.

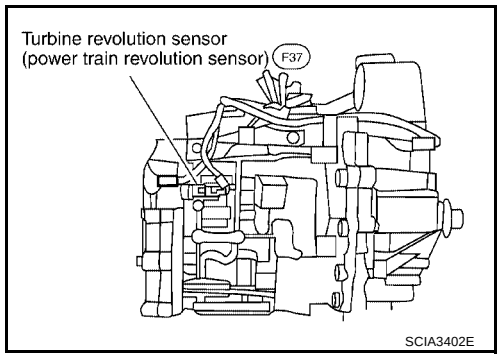

Park/Neutral Position (PNP) Switch Adjustment

UCS000RD

1. Remove control cable from manual shaft.
2. Set manual shaft in N position.
3. Loosen park/neutral position (PNP) switch fixing bolts.

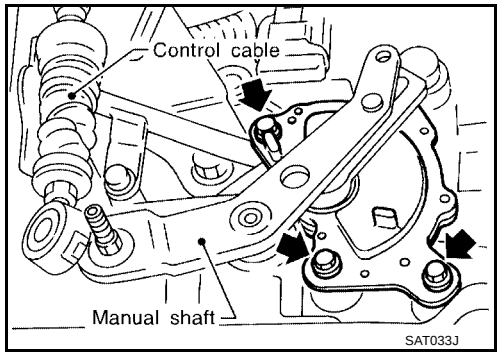

4. Insert pin into adjustment holes in both park/neutral position (PNP) switch and manual shaft as near vertical as possible.
5. Installation is in the reverse order of removal.
6. Check continuity of park/neutral position (PNP) switch. Refer to AT-109, "Diagnostic Procedure" .

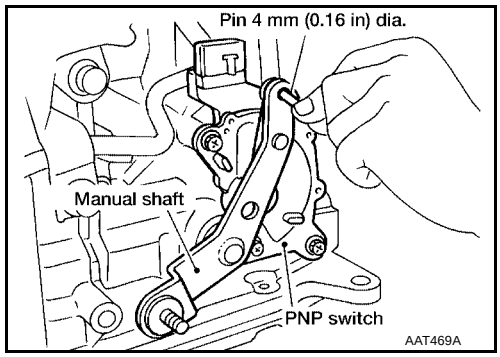

ATF Cooler

UCS0010W

REMOVAL

1. Drain ATF. Refer to MA-23, "Changing A/T Fluid" .
2. Drain engine coolant, refer to MA-14, "Changing Engine Coolant" .

3. Remove hose clamps and hoses from ATF cooler.
4. Remove four bolts from ATF cooler and remove ATF cooler.

INSTALLATION

Installation is the reverse order of removal.

: 4.2 N·m (0.43 kg-m, 37 in-lb)

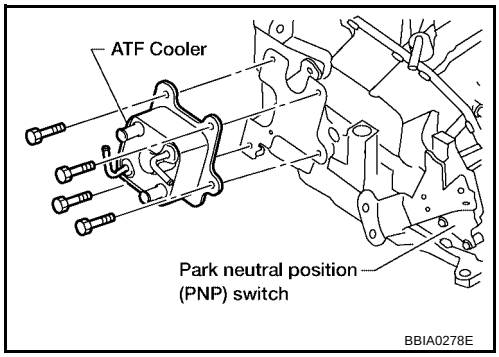

ATF Cooler Valve

UCS0015L

Refer to the figure for ATF cooler valve and hoses removal and installation information.

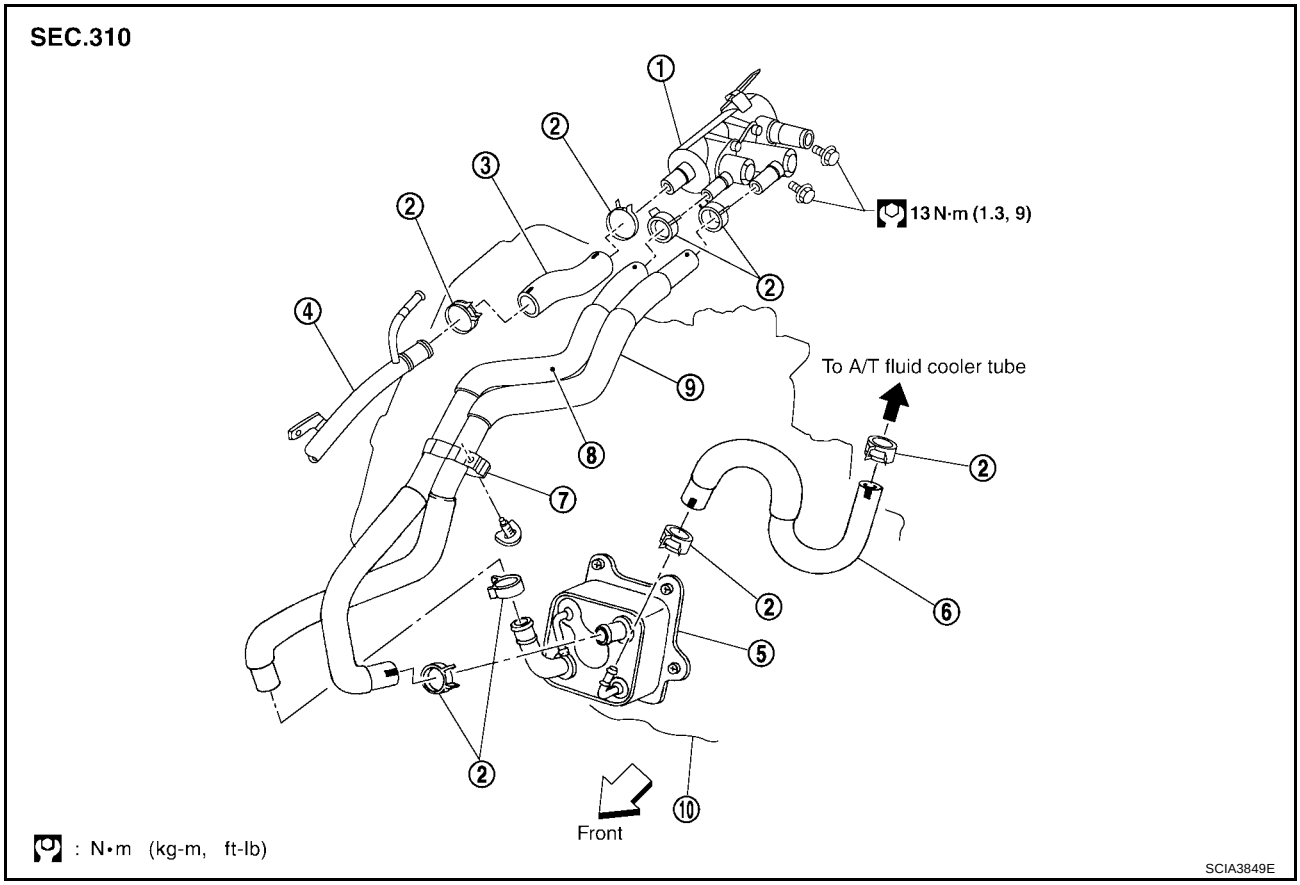

1. ATF cooler valve assembly
2. Hose clamp
3. Heater hose
4. Heater pipe
5. ATF cooler
6. ATF cooler hose
7. Hose clip
8. Outlet water hose
9. Inlet water hose
10. Transaxle assembly

COMPONENT INSPECTION

1. Make sure that ATF cooler valve is fully opened at room temperature.

   Dimension "A": More than 72.0 mm (2.835 in)

   A: Distance between ATF cooler valve port end face and valve shaft end face.

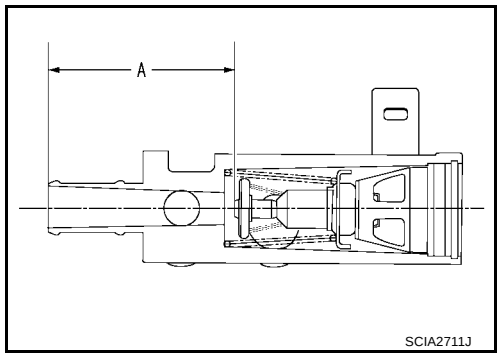

2. Submerge ATF cooler valve in a water-filled container, and then heat it up with temperature of over 82°C (180°F) for 10 minutes more.

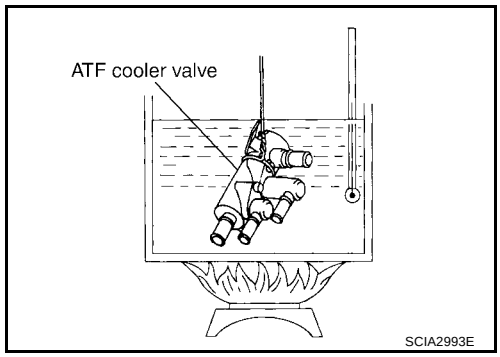

3. Make sure that ATF cooler valve is fully closed.

   Dimension "A": Less than 66.5 mm (2.618 in)

   A: Distance between ATF cooler valve port end face and valve shaft end face.

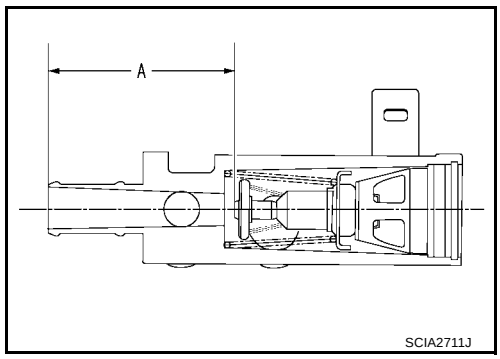

Control Cable Adjustment

UCS000RE

Move selector lever from the P position to the L position. You should be able to feel the detent in each position. If the detent cannot be felt or the pointer indicating the position is improperly aligned, the control cable needs adjustment.

1. Place selector lever in the P position.

   CAUTION:
   Turn wheels more than 1/4 turn and apply the parking brake.
2. Loosen control cable lock nut.
3. Secure the manual lever.
4. Using the specified force, push control cable in the direction of the arrow shown in the illustration.

   Specified force : 9.8 N (1.0 kg, 2.2 lb)
5. Tighten control cable lock nut.
6. Move selector lever from P to L position. Make sure that selector lever moves smoothly.
   - **Make sure that the starter operates when the selector lever is placed in the N or P position.**
   - **Make sure that the transmission is locked properly when the selector lever is placed in the P position.**

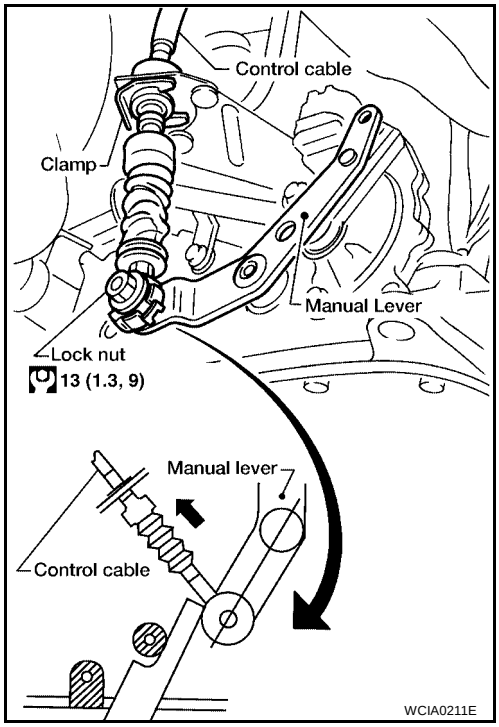

Differential Side Oil Seal Replacement

UCS000RF

1. Remove drive shaft assembly. Refer toFAX-8, "FRONT DRIVE SHAFT" .
2. Remove oil seal.

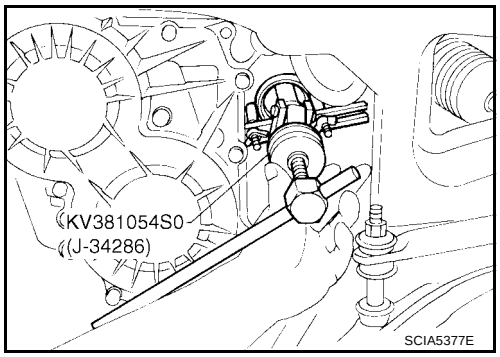

3. Install oil seal.
   - **Apply ATF before installing.**

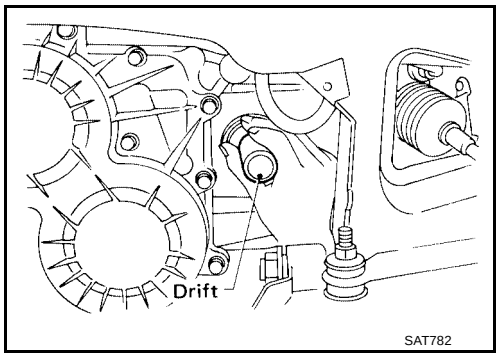

- **Install oil seals so dimension A is within specification**

  A : –0.5 mm (–0.02 in) to 0.5 mm (0.02 in)

4. Installation is in the reverse order of removal.

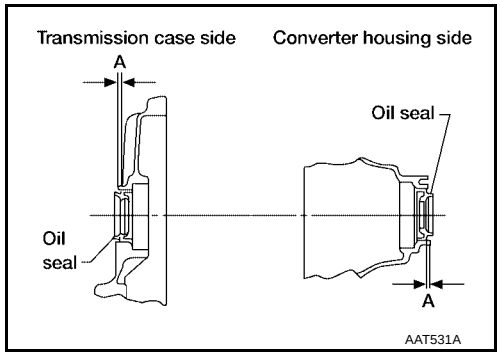

REMOVAL AND INSTALLATION

PFP:00000

Removal

UCS001E2

Remove the engine and transaxle assembly from the vehicle. Refer to EM-133, "ENGINE ASSEMBLY" .

Inspection After Removal

UCS001E3

- Drive plate runout

  CAUTION:
  Do not allow any magnetic materials to contact the ring gear teeth.

  Maximum allowable runout:

  Refer to EM-166, "DRIVE PLATE" .

- If this runout is out of allowance, replace drive plate and ring gear.

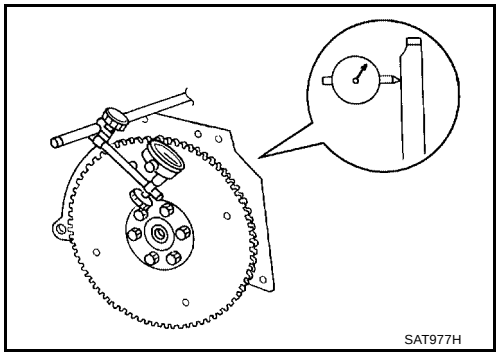

- When connecting torque converter to transaxle, measure distance “A” to be certain that they are correctly assembled.

  Distance “A” : 14 mm (0.55 in) or more

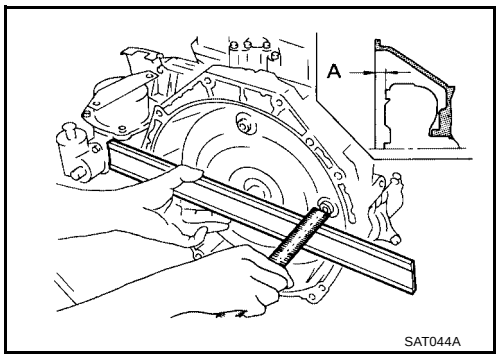

Installation

UCS001E4

Install in the reverse order of removal.

OVERHAUL

PFP:00000

Components

UCS000RI

SEC.311·313·327·381

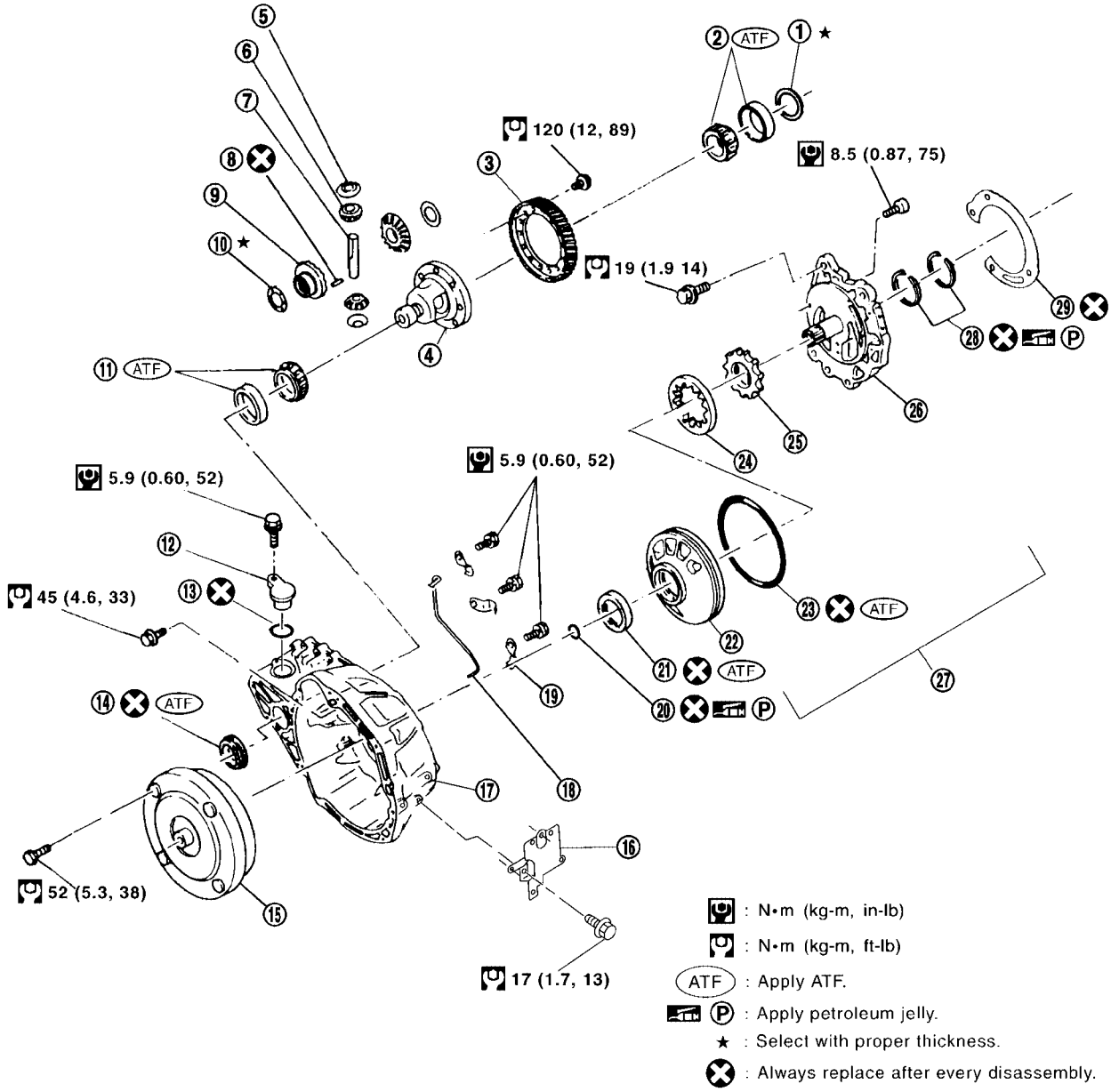

SCIA3601E

1.	Differential side bearing adjusting shim	2.	Differential side bearing	3.	Final gear
4.	Differential case	5.	Pinion mate gear thrust washer	6.	Pinion mate gear
7.	Pinion mate shaft	8.	Lock pin	9.	Side gear
10.	Side gear thrust washer	11.	Differential side bearing	12.	Plug
13.	O-ring	14.	Differential side oil seal	15.	Torque converter
16.	Cooler bracket	17.	Converter housing	18.	Differential lubricant tube
19.	Clip	20.	Input shaft O-ring	21.	Oil seal
22.	Oil pump housing	23.	O-ring	24.	Outer gear
25.	Inner gear	26.	Oil pump cover	27.	Oil pump assembly
28.	Seal ring	29.	Gasket		

SEC.315

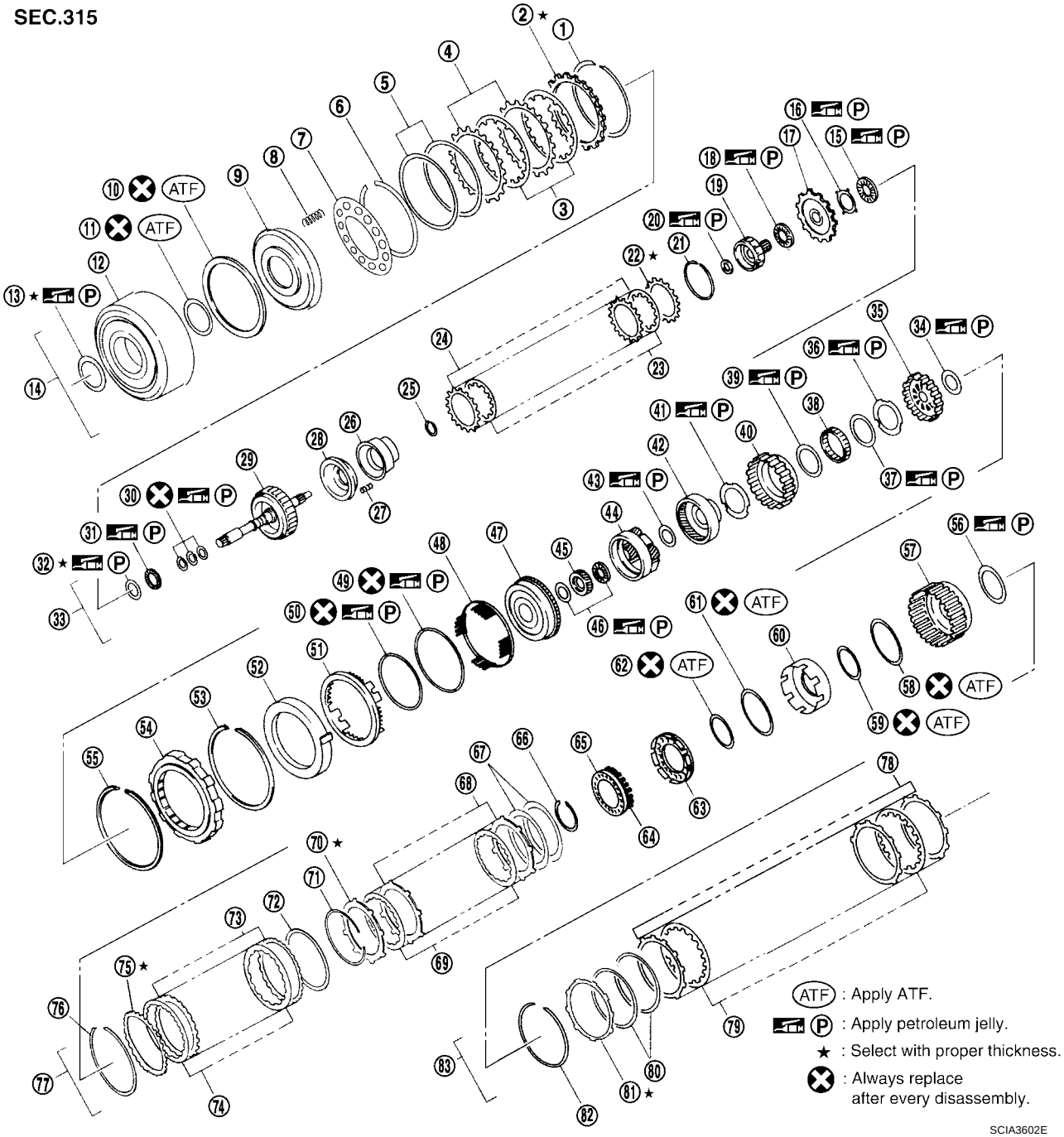

1. Snap ring	2. Retaining plate	3. Drive plate
4. Driven plate	5. Dish plate	6. Snap ring
7. Spring retainer	8. Return spring	9. Reverse clutch piston
10. Seal ring	11. D-ring	12. Reverse clutch drum
13. Thrust washer	14. Reverse clutch assembly	15. Needle bearing
16. Bearing race	17. Front sun gear	18. Needle bearing
19. High clutch hub	20. Needle bearing	21. Snap ring
22. Retaining plate	23. Drive plate	24. Driven plate
25. Snap ring	26. Cancel force cover	27. Return spring
28. Input clutch piston	29. High clutch drum	30. Seal ring
31. Needle bearing	32. Bearing race	33. High clutch
34. Needle bearing	35. Overrun clutch hub	36. Thrust washer
37. Bearing	38. Forward one-way clutch	39. Bearing

40. Forward clutch hub
41. Thrust washer
42. Rear internal gear
43. Needle bearing
44. Rear planetary carrier
45. Rear sun gear
46. Needle bearing
47. Front planetary carrier
48. Spring retainer
49. D-ring
50. D-ring
51. Low & reverse brake piston
52. Retainer
53. Snap ring
54. Low one-way clutch
55. Snap ring
56. Needle bearing
57. Forward clutch drum
58. Seal ring
59. D-ring
60. Forward clutch piston
61. Seal ring
62. D-ring
63. Overrun clutch piston
64. Return spring
65. Spring retainer
66. Snap ring
67. Dish plate
68. Driven plate
69. Drive plate
70. Retaining plate
71. Snap ring
72. Dish plate
73. Driven plate
74. Drive plate
75. Retaining plate
76. Snap ring
77. Forward clutch and overrun clutch
78. Driven plate
79. Drive plate
80. Dish plate
81. Retaining plate
82. Snap ring
83. Low & reverse brake

SEC.310·315·317·319

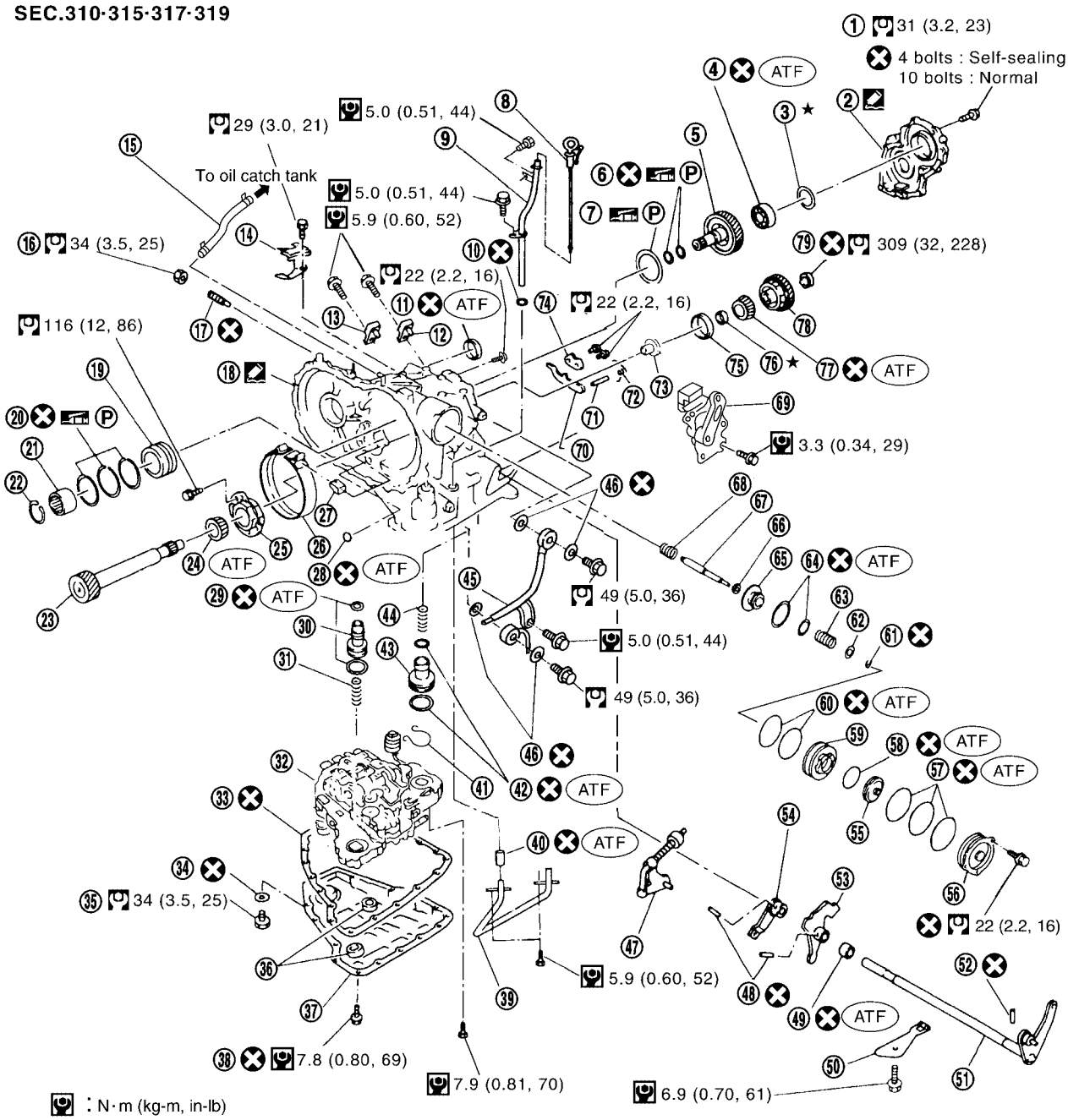

: N·m (kg-m, in-lb)

: N·m (kg-m, ft-lb)

: Apply Genuine Anaerobic Liquid Gasket or equivalent. Refer to GI section.

ATF : Apply ATF.

P : Apply petroleum jelly.

★ : Select with proper thickness.

: Always replace after every disassembly.

SCIA3603E

1. Side cover fitting bolt	2. Side cover	3. Adjusting shim
4. Output shaft bearing	5. Output shaft	6. Seal ring
7. Needle bearing	8. A/T fluid level gauge	9. A/T fluid charging pipe
10. O-ring	11. Oil seal	12. Revolution sensor
13. Turbine revolution sensor (power train revolution sensor)	14. Bracket	15. Breather hose
16. Lock nut	17. Anchor end pin	18. Transaxel case

19. Bearing retainer	20. Seal ring	21. Radial needle bearing
22. Snap ring	23. Reduction pinion gear	24. Reduction pinion gear bearing inner race
25. Reduction pinion gear bearing outer race	26. Brake band	27. Strut
28. O-ring	29. O-ring	30. Servo release accumulator piston
31. Return spring	32. Control valve assembly	33. Gasket
34. Drain plug gasket	35. Drain plug	36. Magnet
37. Oil pan	38. Oil pan fitting bolt	39. Low & reverse brake tube
40. Oil sleeve	41. Stopper ring	42. O-ring
43. N-D accumulator piston	44. Return spring	45. A/T fluid cooler tube
46. Copper washer	47. Parking rod	48. Retaining pin
49. Oil seal	50. Detente spring	51. Manual shaft
52. Retaining pin	53. Manual plate	54. Parking rod plate
55. O/D servo piston	56. O/D servo piston retainer	57. O-ring
58. D-ring	59. Servo piston retainer	60. O-ring
61. E-ring	62. Spring retainer	63. O/D servo return spring
64. D-ring	65. Band servo piston	66. Band servo thrust washer
67. Band servo piston stem	68. 2nd servo return spring	69. PNP switch
70. Parking pawl	71. Parking shaft	72. Return spring
73. Paring pawl spacer	74. Parking actuator sport	75. Idler gear bearing outer race
76. Adjusting shim	77. Idler gear bearing inner race	78. Idler gear
79. Lock nut		

Oil Channel

UCS000RJ

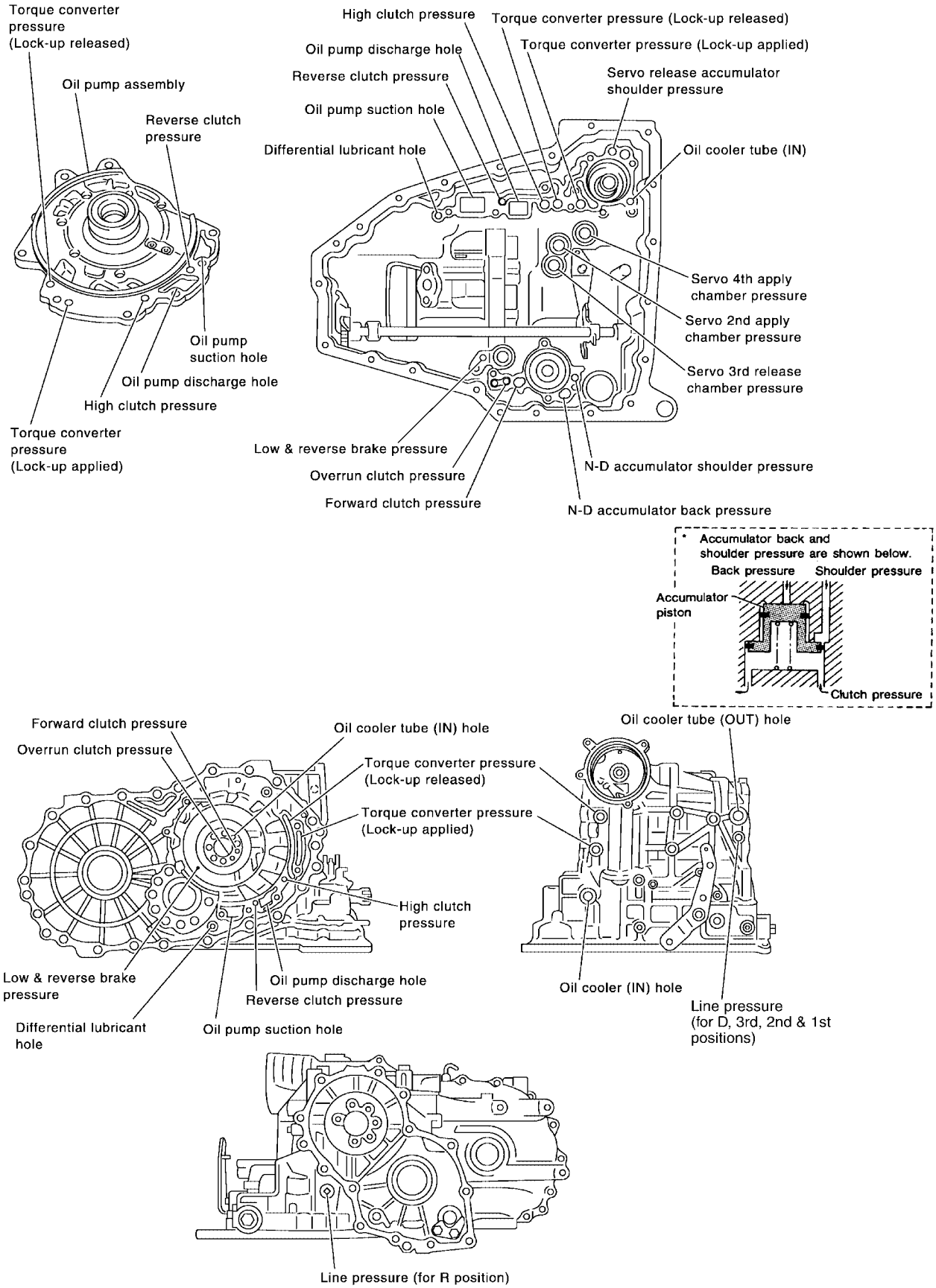

Locations of Adjusting Shims, Needle Bearings, Thrust Washers and Snap Rings

UCS000RK

Outer diameter of thrust washers

Item number	Outer diameter mm (in)	Parts number*
Ⓙ★	76.0 (2.992)	31508 80X14 - 31508 80X20
Ⓚ★	80.0 (3.150)	31438 80X60 - 31438 80X70

Outer and inner diameter of needle bearings

Item number	Outer diameter mm (in)	Inner diameter mm (in)	Parts number*
Ⓐ	49.1 (1.969)	35.1 (1.382)	31407 88X00
Ⓑ	42.0 (1.654)	23.7 (0.933)	31407 80X01
Ⓒ	70.0 (2.756)	50.0 (1.969)	31407 80X09
Ⓓ	51.0 (2.008)	33.1 (1.303)	31407 80X02
Ⓔ	48.0 (1.890)	30.0 (1.181)	31407 80X03
Ⓕ	49.1 (1.969)	35.1 (1.382)	31407 88X00
Ⓖ	56.5 (2.224)	38.5 (1.516)	31407 80X08
Ⓗ	87.0 (3.425)	69.0 (2.717)	31407 80X07
Ⓘ	108.0 (4.252)	85.15 (3.3524)	31407 88X24

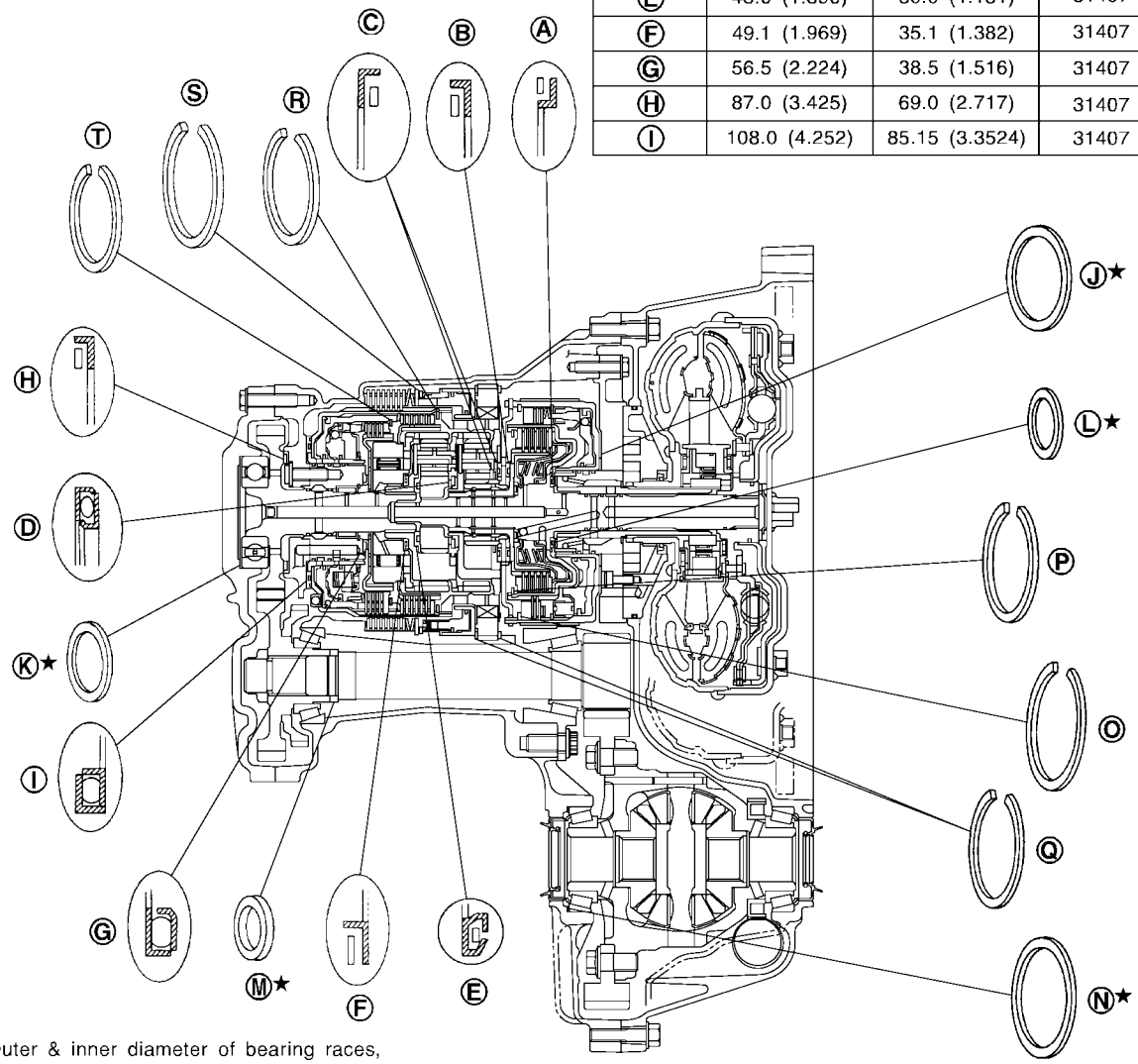

Outer & inner diameter of bearing races, adjusting shims and adjusting spacer

Item number	Outer diameter mm (in)	Inner diameter mm (in)	Parts number*
Ⓛ★	51.0 (2.008)	36.0 (1.417)	31435 80X00 - 31435 80X06 31435 80X09 - 31435 80X14
Ⓜ★	38.0 (1.496)	28.1 (1.106)	31439 85X01 - 31439 85X06 31439 83X11 - 31439 83X24 31439 81X00 - 31439 81X24 31439 81X46 - 31439 81X49 31439 81X60 - 31439 81X74
Ⓝ★	75.0 (2.953)	67.0 (2.638)	31438 80X00 - 31438 80X11

★ : Select proper thickness.

* : Always check with the Parts Department for the latest parts information.

Outer diameter of snap rings

Item number	Outer diameter mm (in)	Parts number*
Ⓞ	150 (5.91)	31506 89X00
Ⓟ	119.1 (4.689)	31506 80X06
Ⓠ	182.8 (7.197)	31506 80X08
Ⓡ	144.8 (5.701)	31506 80X03
Ⓢ	173.8 (6.843)	31506 80X09
Ⓣ	133.9 (5.272)	31506 80X01

SCIA3277E

DISASSEMBLY

PFP:31020

Disassembly

UCS000RL

1. Drain ATF through drain plug.
2. Remove torque converter.

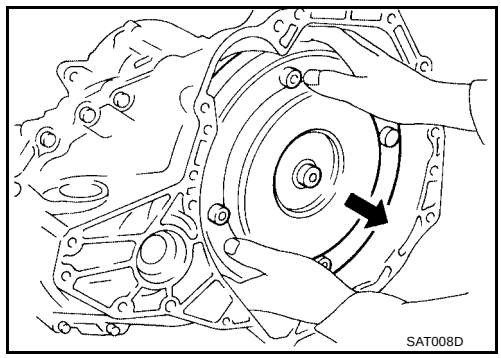

3. Check torque converter one-way clutch using check tool as shown at left.

a. Insert check tool into the groove of bearing support built into one-way clutch outer race.

b. When fixing bearing support with check tool, rotate one- way clutch spline using screwdriver.

c. Check that inner race rotates clockwise only. If not, replace torque converter assembly.

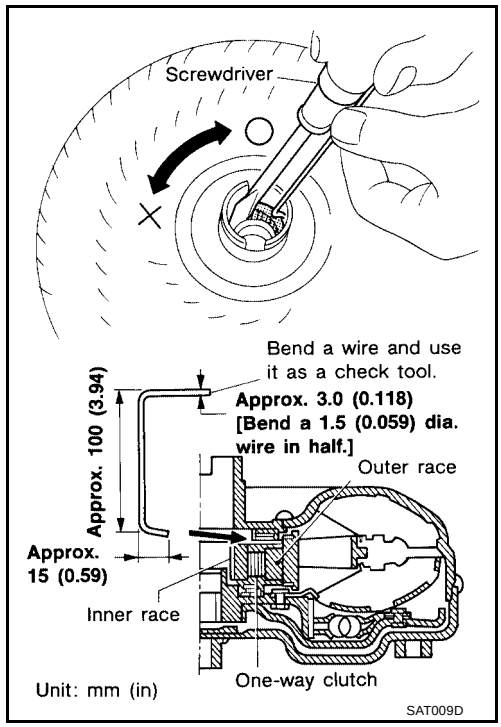

4. Remove A/T fluid level gauge.
5. Remove A/T fluid charging pipe and fluid cooler tube.

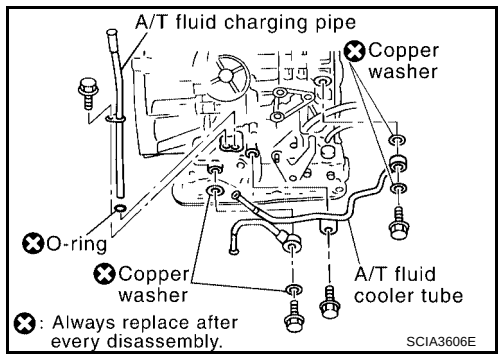

6. Set manual shaft to position P.
7. Remove park/neutral position (PNP) switch.

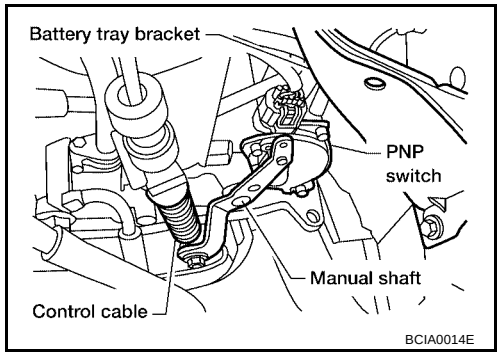

8. Remove oil pan using power tools, and oil pan gasket.
9. Check foreign materials in oil pan to help determine causes of malfunction. If the fluid is very dark, smells burned, or contains foreign particles, the frictional material (clutches, band) may need replacement. A tacky film that will not wipe clean indicates varnish build up. Varnish can cause valves, servo, and clutches to stick and can inhibit pump pressure.
   - **If frictional material is detected, replace radiator after repair of A/T. Refer to CO-11, "RADIATOR" .**

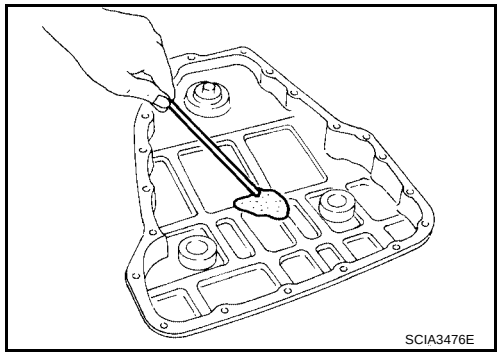

10. Remove control valve assembly according to the following procedures.

a. Remove control valve assembly mounting bolts **I** , **X** and ●.

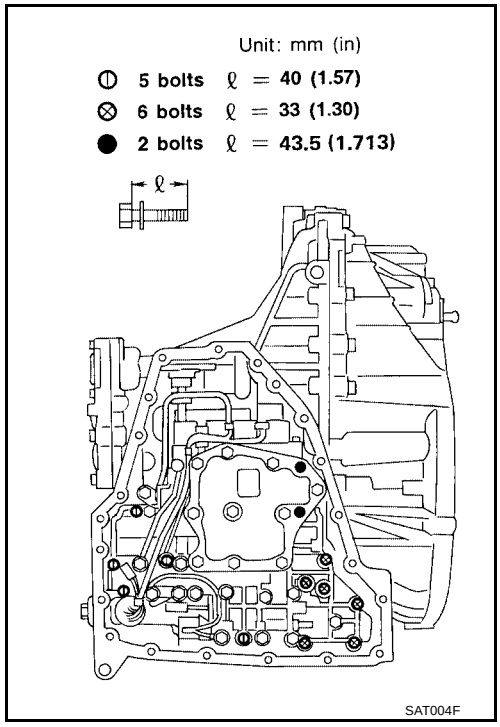

b. Remove stopper ring from terminal body.
   - **Do not expand stopper ring excessively.**

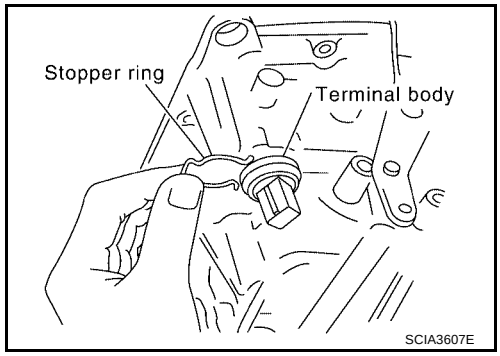

c. Push terminal body into transaxle case and draw out terminal cord assembly.

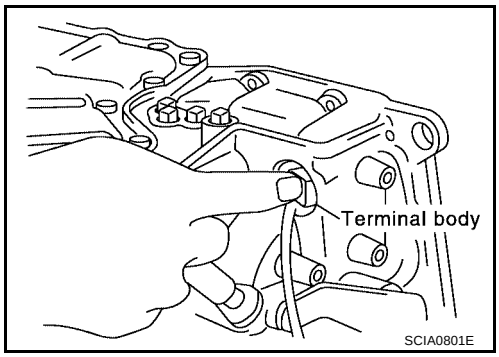

11. Remove manual valve from control valve assembly.

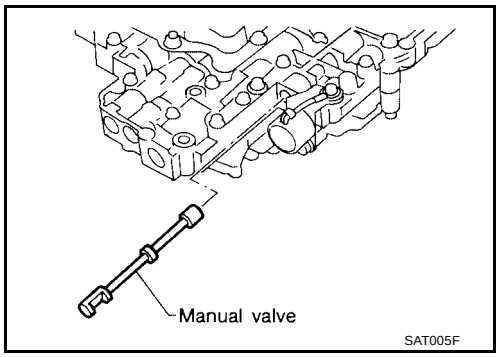

12. Remove return spring from servo release accumulator piston.

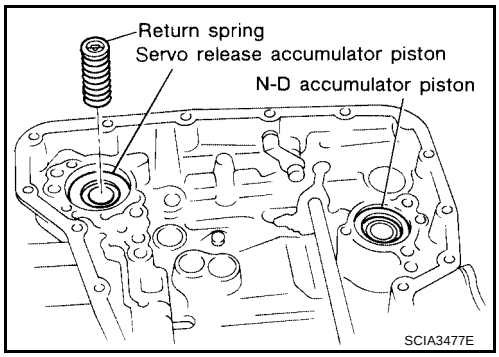

13. Remove servo release accumulator piston with compressed air.

CAUTION:

- **Strong flow of air will push the accumulator piston out along with a splash of oil. Cover the area with paper towels and blow air little by little to avoid this.**
- **Wrap the removed accumulator piston in a paper towel.**

14. Remove O-rings from servo release accumulator piston.

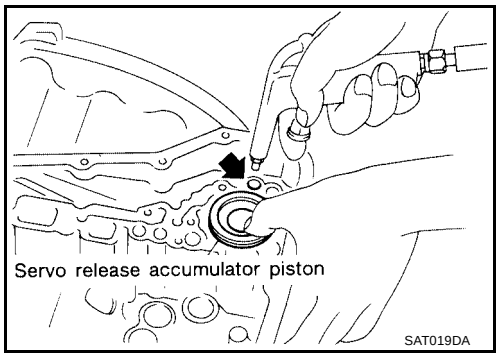

15. Remove N-D accumulator piston and return spring with compressed air.

CAUTION:

- **Strong flow of air will push the accumulator piston out along with a splash of oil. Cover the area with paper towels and blow air little by little to avoid this.**
- **Wrap the removed accumulator piston in a paper towel.**

16. Remove O-rings from N-D accumulator piston.

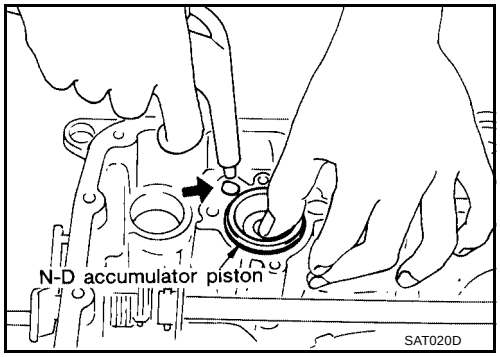

17. Check accumulator pistons and contact surface of transaxle case for damage.
18. Check accumulator return springs for damage and free length.

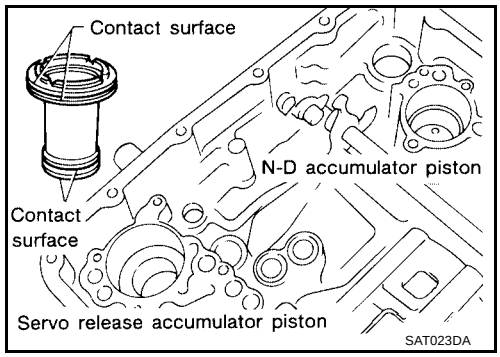

19. Remove lip seals.

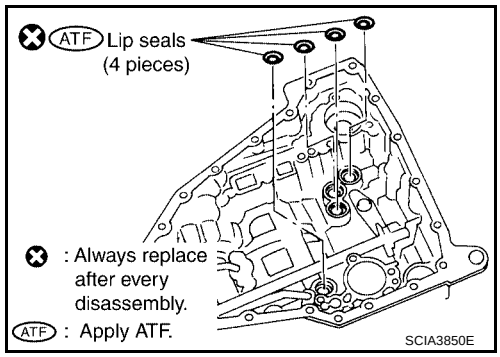

20. Remove low & reverse brake tube and oil sleeve.

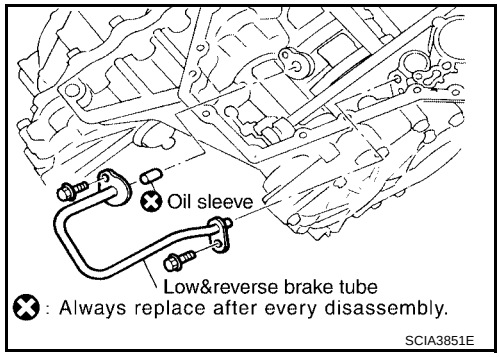

21. Remove converter housing according to the following procedures.

a. Remove converter housing mounting bolts using power tools.
b. Remove converter housing by tapping it lightly.

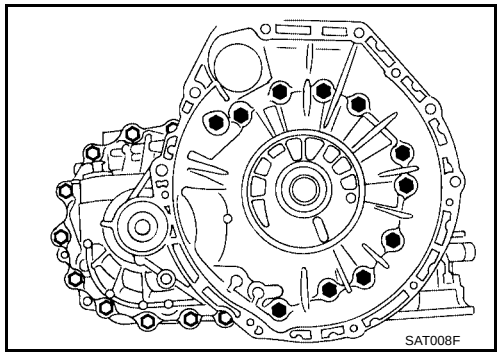

c. Remove O-ring from differential oil port.

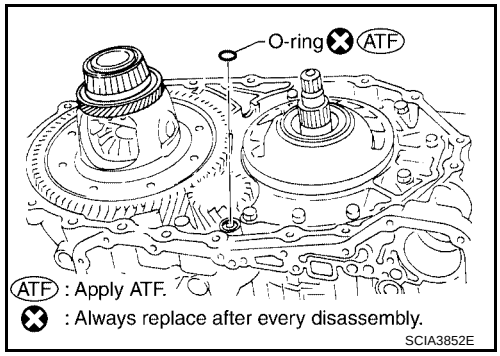

22. Remove final drive assembly from transaxle case.

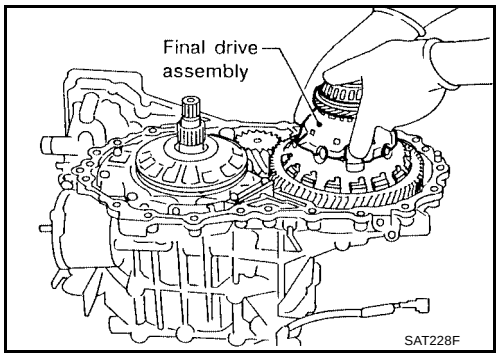

23. Remove differential side bearing outer race and side bearing adjusting shim from transaxle case.

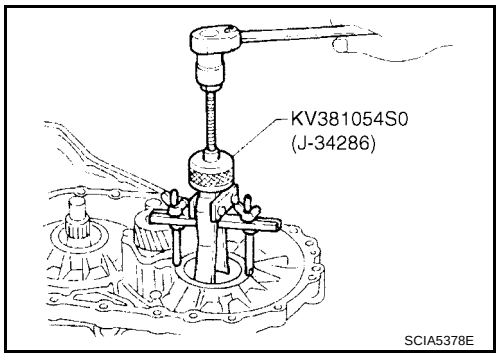

24. Remove differential side bearing adjusting shim from transaxle case.

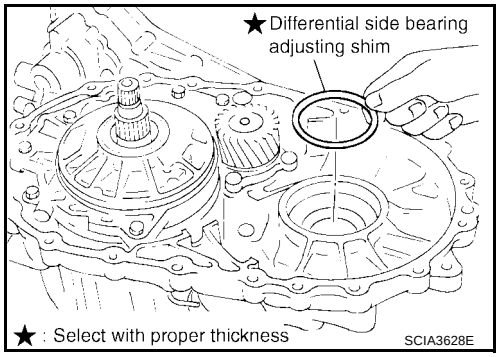

25. Remove differential side bearing outer race from converter housing.

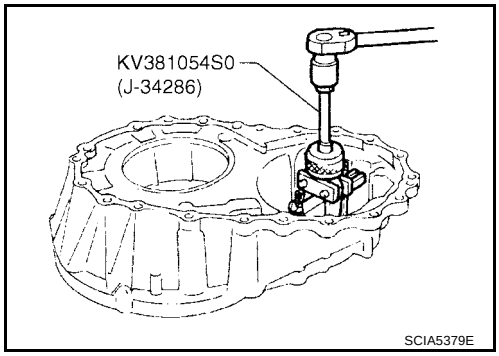

26. Remove oil seal with screwdriver from converter housing.
    - **Be careful not to damage case.**

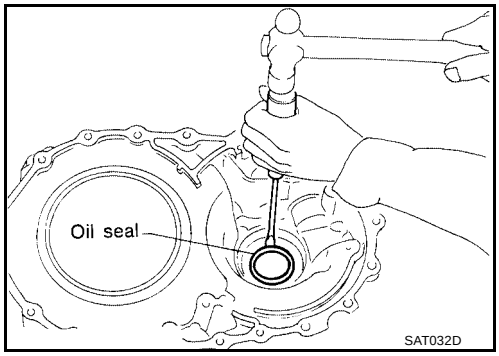

27. Remove differential lubricant tube from converter housing.

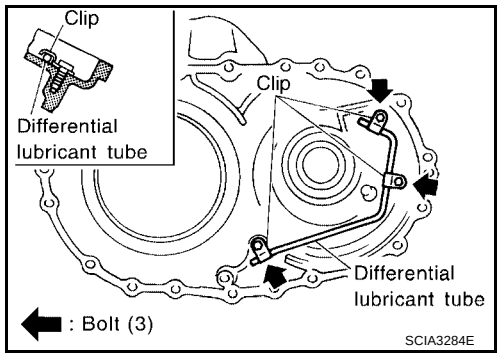

28. Remove oil pump according to the following procedures.

a. Remove O-ring from input shaft.

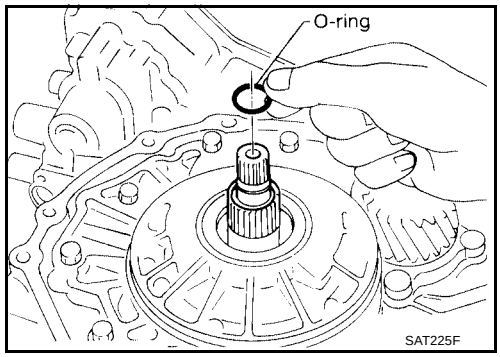

b. Remove oil pump assembly and gasket from transaxle case.

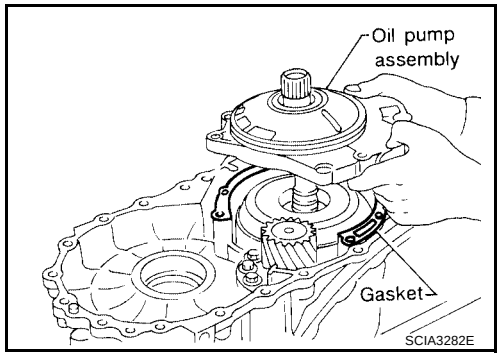

c. Remove thrust washer and bearing race from oil pump assembly.

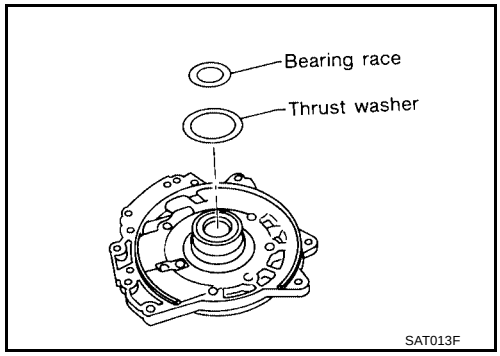

29. Remove brake band according to the following procedures.

a. Loosen lock nut, then back off anchor end pin.

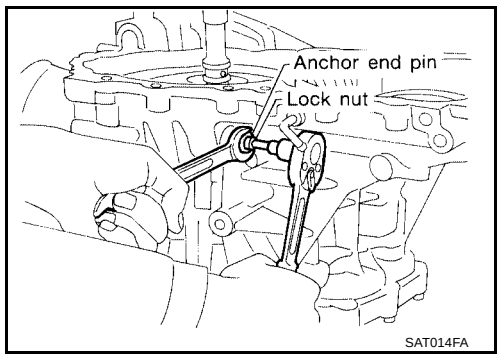

b. Remove brake band and strut from transaxle case.

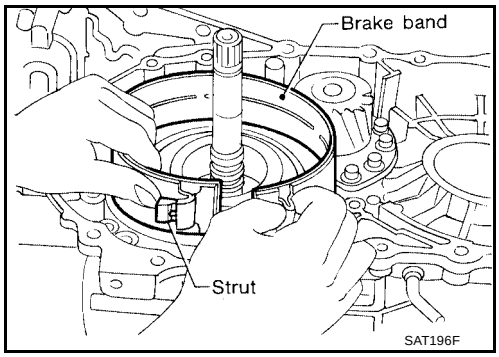

- **To prevent brake linings from cracking or peeling, do not stretch the flexible band unnecessarily. When removing the brake band, always secure it with a clip as shown in the figure at left.**
  Leave the clip in position after removing the brake band.

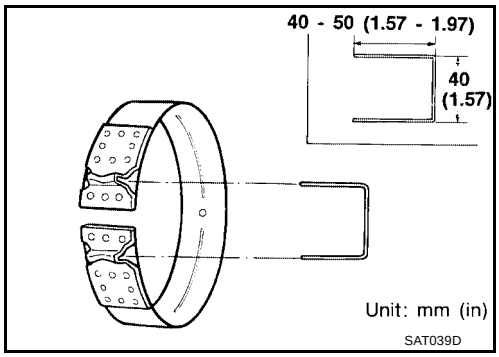

c. Check brake band facing for damage, cracks, wear or burns.

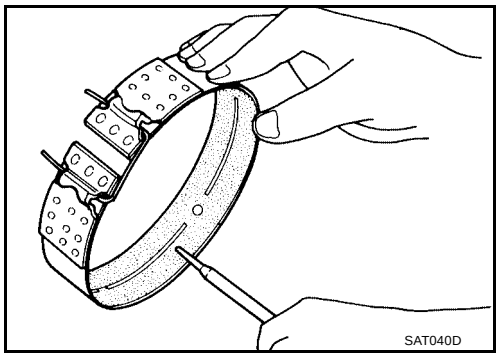

30. Remove input shaft assembly (high clutch assembly) and reverse clutch according to the following procedures.

a. Remove input shaft assembly (high clutch assembly) with reverse clutch.

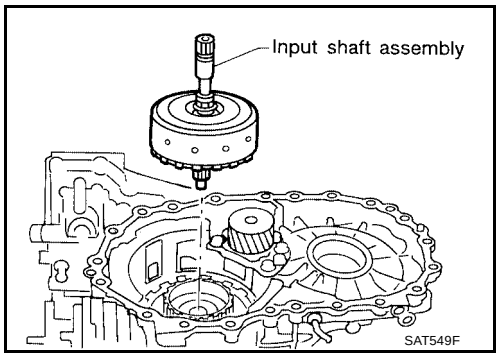

b. Remove input shaft assembly (high clutch assembly) from reverse clutch.

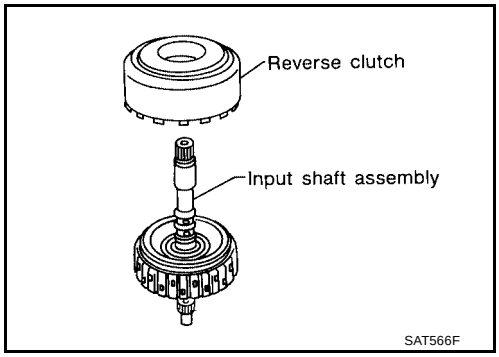

c. Remove needle bearings from high clutch drum and check for damage or wear.

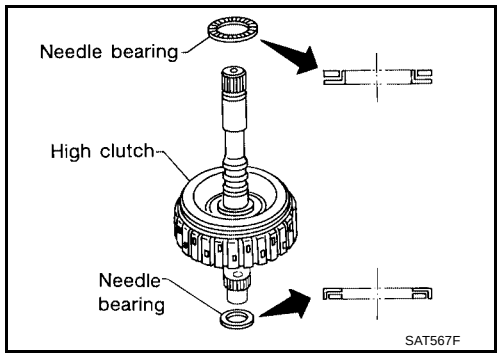

d. Remove high clutch hub and front sun gear from transaxle case.

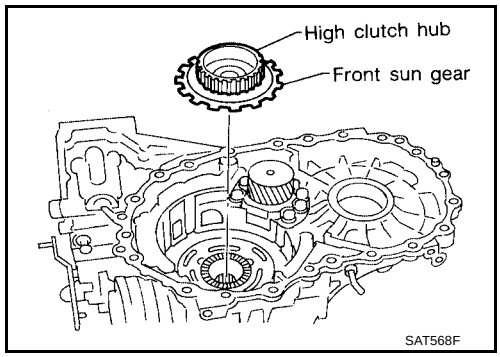

e. Remove front sun gear and needle bearing from high clutch hub and check for damage or wear.

f. Remove bearing race from front sun gear and check for damage or wear.

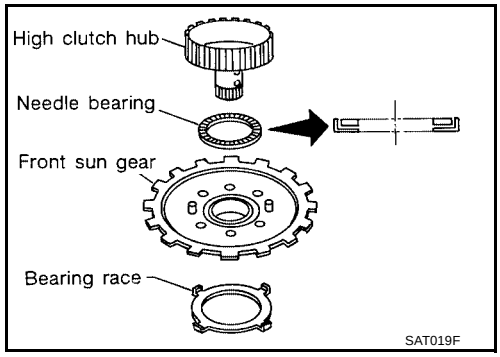

31. Remove needle bearing from transaxle case and check for damage or wear.

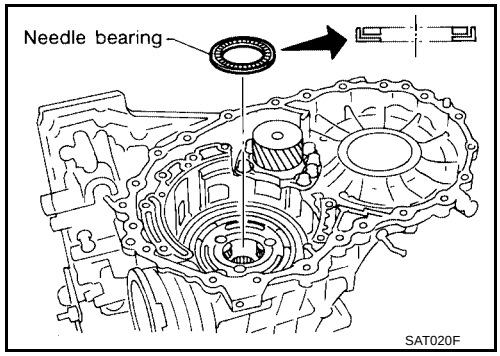

32. Apply compressed air and check to see that low & reverse brake operates.

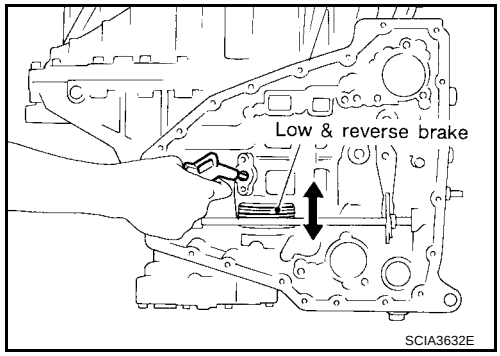

33. Remove low one-way clutch and front planetary carrier assembly according to the following procedures.

a. Remove snap ring with flat-bladed screwdriver.

- **Do not expand snap ring excessively.**

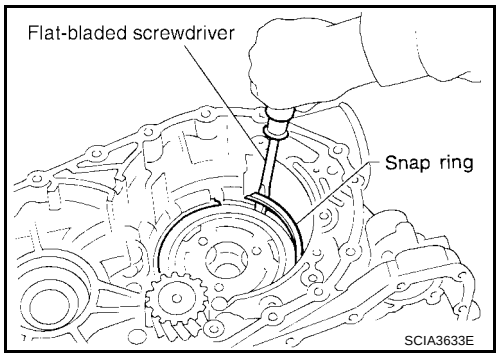

b. Remove low one-way clutch with a hook made of wire.

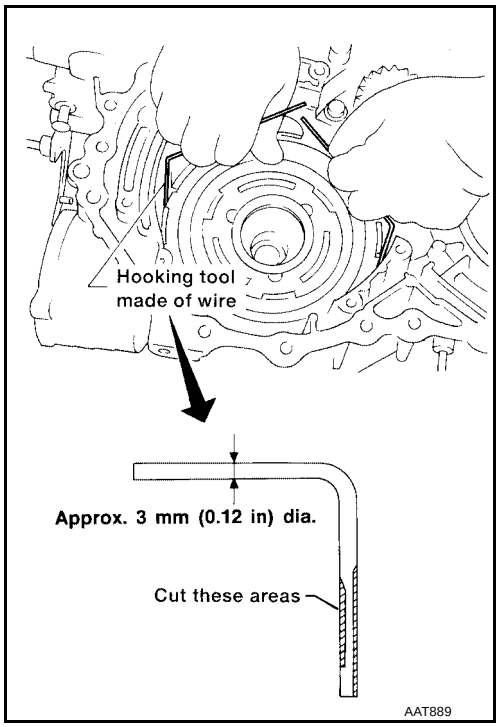

c. Remove snap ring with flat-bladed screwdriver.

- **Do not expand snap ring excessively.**

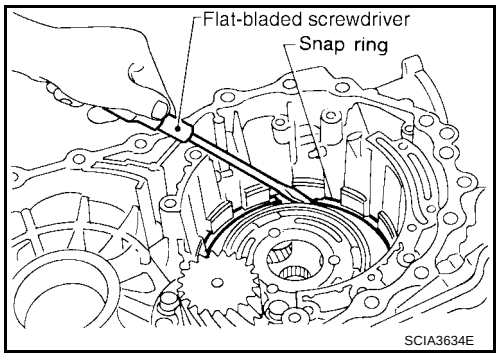

d. Remove front planetary carrier with low & reverse brake piston and retainer.

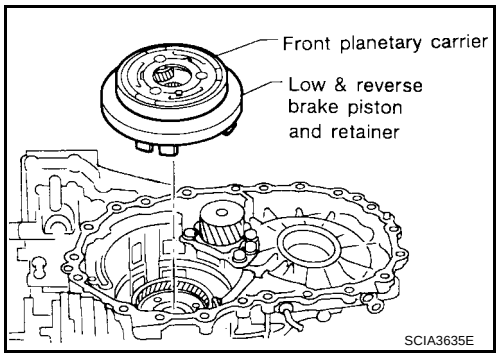

e. Remove low & reverse brake spring retainer.
   - **Do not remove return springs from spring retainer.**

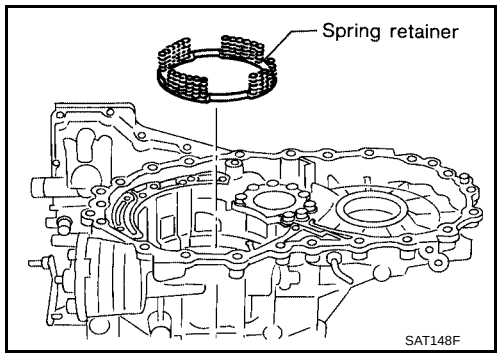

f. Check that low one-way clutch rotates in the direction of the clockwise arrow and locks in the opposite direction.

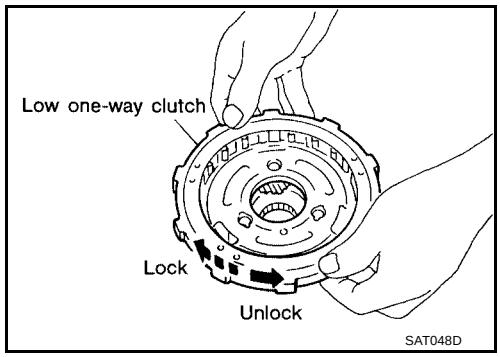

g. Remove needle bearing, low & reverse brake piston and retainer from front planetary carrier.

h. Check front planetary carrier, low one-way clutch and needle bearing for damage or wear.

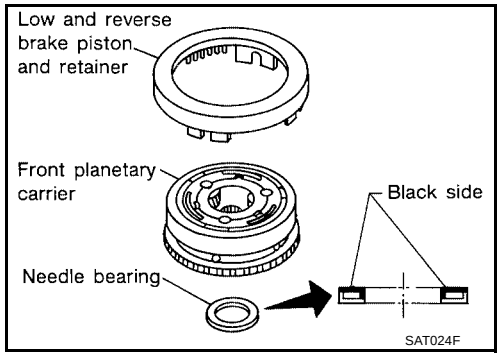

i. Check clearance between planetary gears and planetary carrier with feeler gauge.

Standard clearance	**: 0.20 - 0.70 mm (0.0079 - 0.0276 in)**
Allowable limit	**: 0.80 mm (0.0315 in)**

Replace front planetary carrier if the clearance exceeds allowable limit.

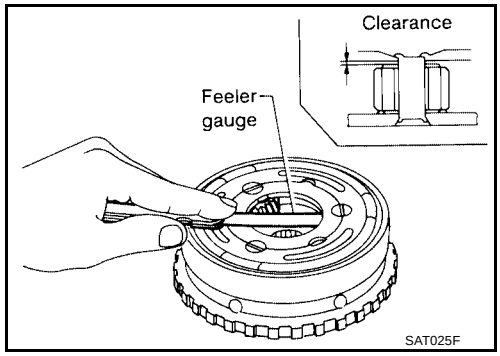

34. Remove rear planetary carrier assembly and rear sun gear according to the following procedures.

a. Remove rear planetary carrier assembly from transaxle case.

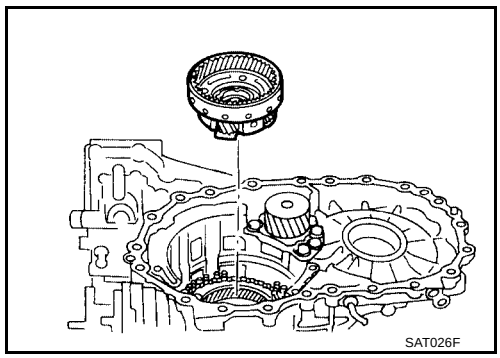

b. Remove rear sun gear from rear planetary carrier.

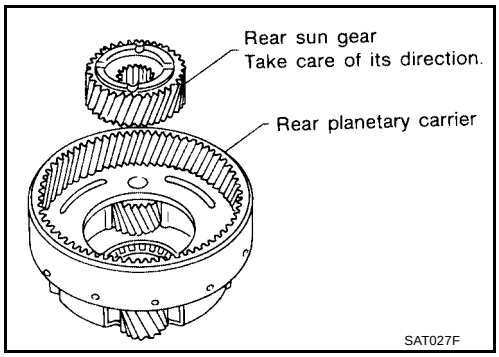

c. Remove needle bearings from rear planetary carrier assembly.

d. Check rear planetary carrier, rear sun gear and needle bearings for damage or wear.

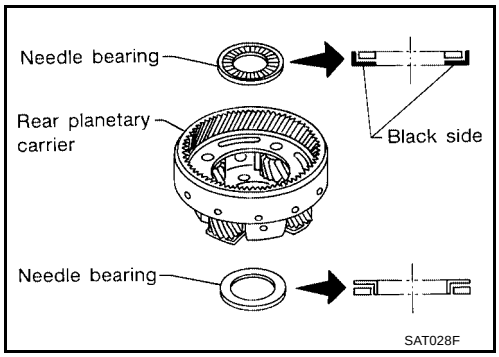

e. Check clearance between pinion washer and rear planetary carrier with feeler gauge.

Standard clearance	**: 0.20 - 0.70 mm (0.0079 - 0.0276 in)**
Allowable limit	**: 0.80 mm (0.0315 in)**

Replace rear planetary carrier if the clearance exceeds allowable limit.

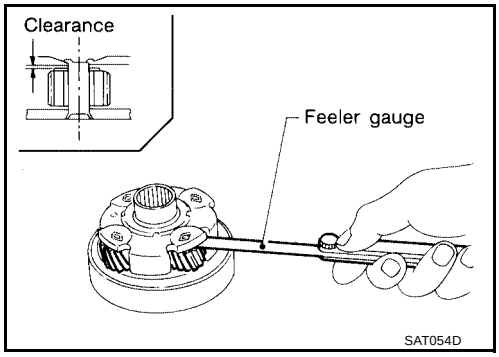

35. Remove rear internal gear and forward clutch hub from transaxle case.

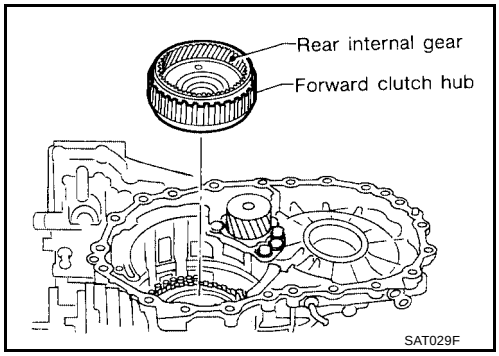

36. Remove overrun clutch hub from transaxle case.

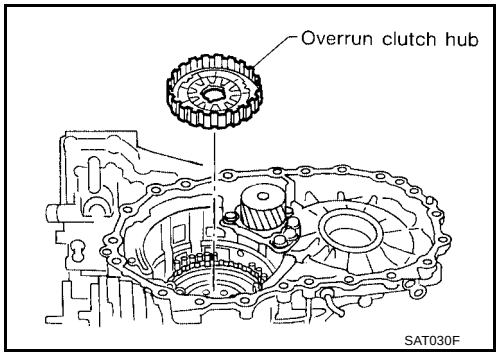

37. Remove needle bearing from overrun clutch hub and check for damage or wear.

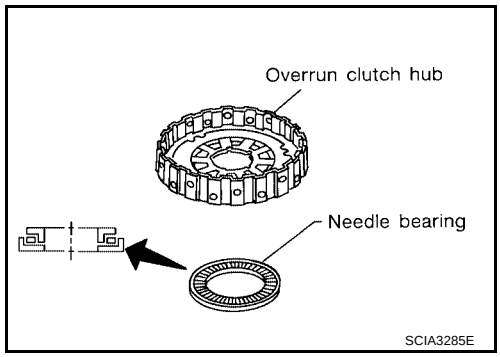

38. Remove forward clutch assembly from transaxle case.

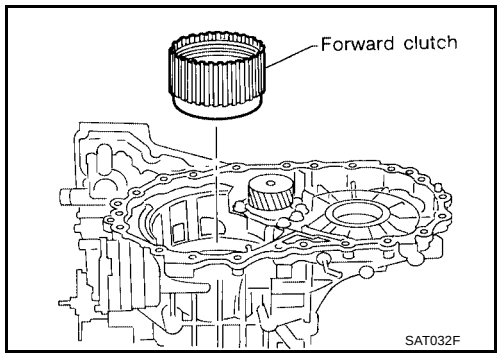

39. Remove needle bearing from transaxle case.

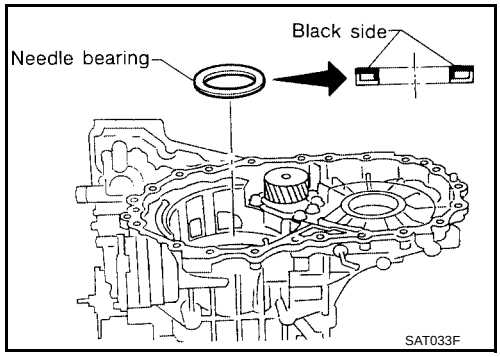

40. Remove output shaft assembly according to the following procedures.

a. Remove side cover bolts.
   - **Do not mix bolts A and B.**
   - **Always replace bolts A as they are self-sealing bolts.**

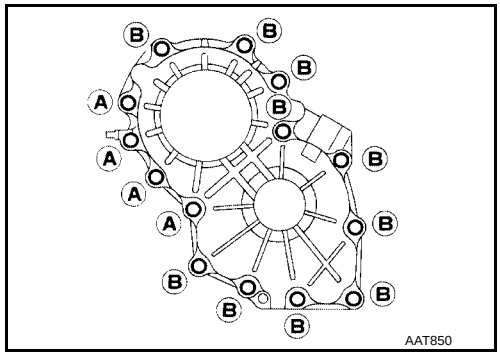

b. Remove side cover by lightly tapping it with a soft hammer.
   - **Be careful not to drop output shaft assembly. It might come out when removing side cover.**

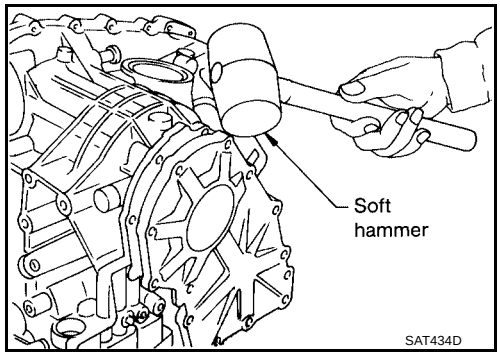

c. Remove adjusting shim.

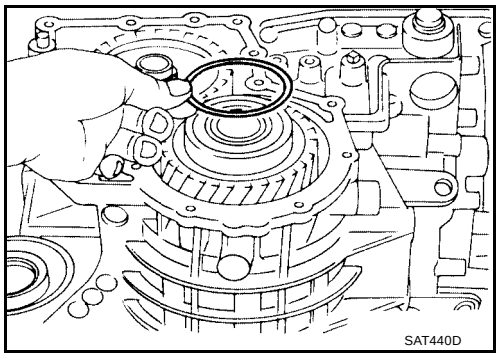

d. Remove output shaft assembly.

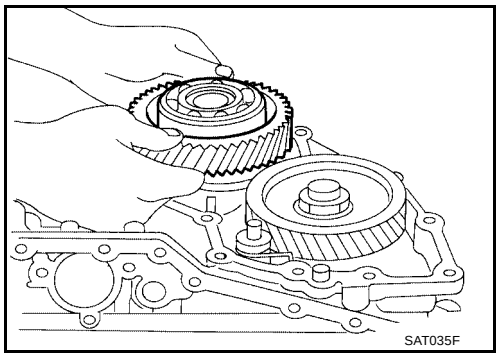

- If output shaft assembly came off with side cover, tap cover with a soft hammer to separate.

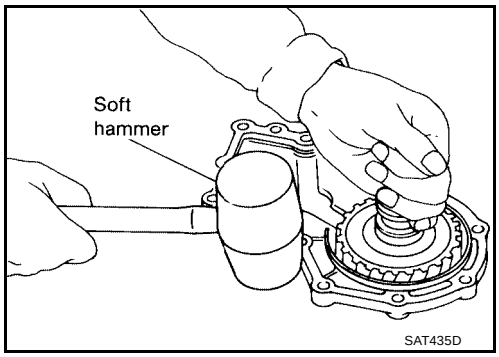

e. Remove needle bearing.

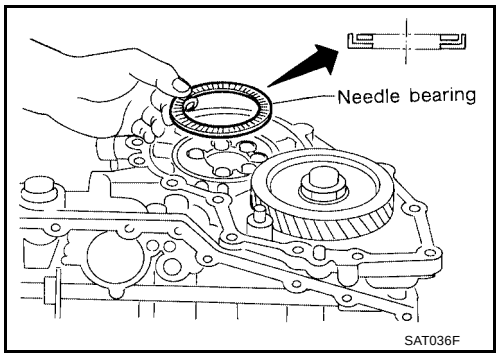

41. Disassemble reduction pinion gear according to the following procedures.

a. Set manual shaft to position P to fix idler gear.

b. Unlock idler gear lock nut using a pin punch.

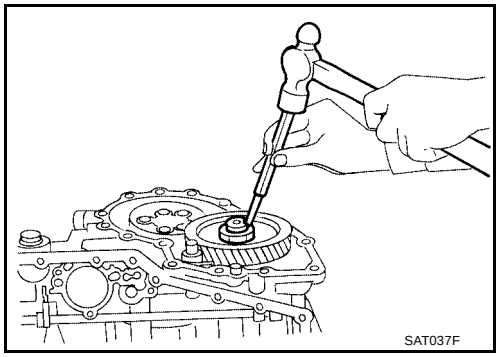

c. Remove idler gear lock nut.
   - **Do not reuse idler gear lock nut.**

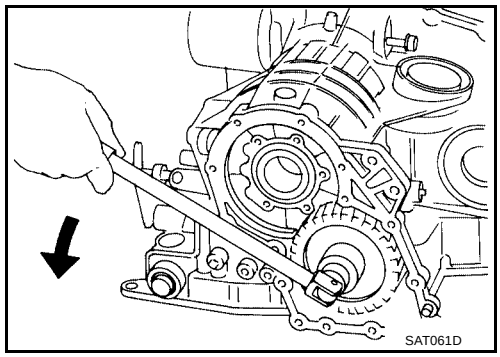

d. Remove idler gear with puller.

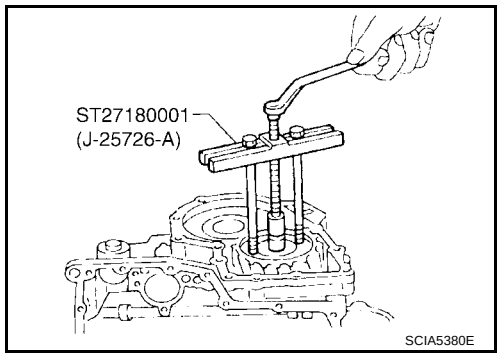

e. Remove reduction pinion gear.
f. Remove adjusting shim from reduction pinion gear.

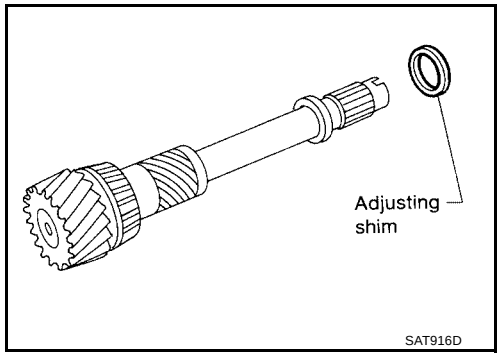

42. Remove return spring from parking shaft with screwdriver.
43. Draw out parking shaft and remove parking pawl from transaxle case.
44. Check parking pawl and shaft for damage or wear.

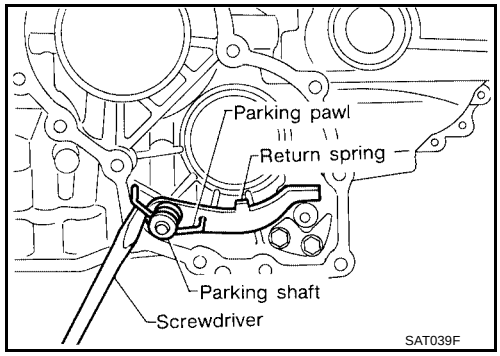

45. Remove parking actuator support from transaxle case.
46. Check parking actuator support for damage or wear.

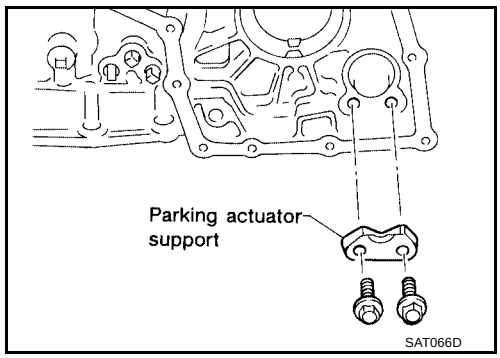

47. Remove side oil seal with screwdriver from transaxle case.

CAUTION:

Be careful not to scratch transaxle case.

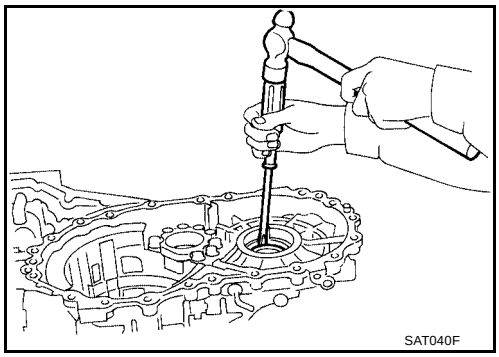

REPAIR FOR COMPONENT PARTS

PFP:00000

Manual Shaft

UCS000RM

COMPONENTS

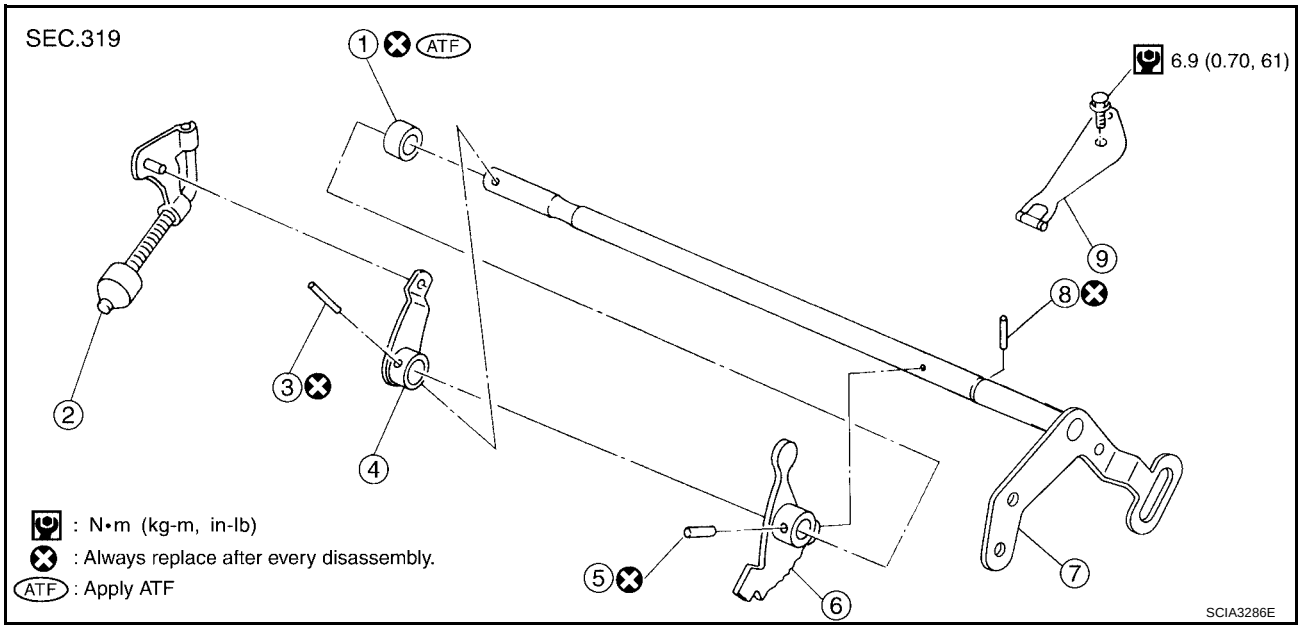

1.	Oil seal	2.	Parking rod	3.	Retaining pin
4.	Parking rod plate	5.	Retaining pin	6.	Manual plate
7.	Manual shaft	8.	Retaining pin	9.	Detente spring

REMOVAL

1. Remove detent spring from transaxle case.

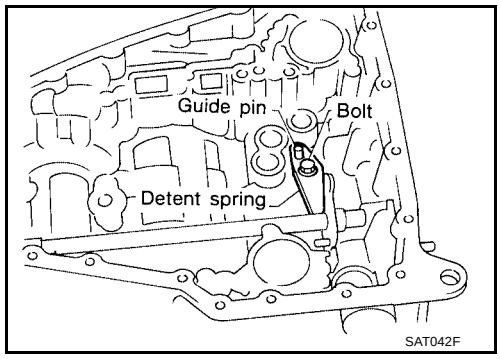

2. Drive out manual plate retaining pin.

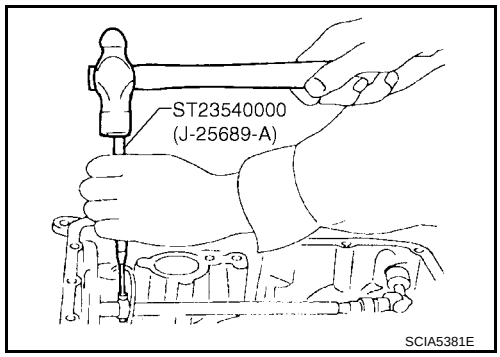

3. Drive and pull out parking rod plate retaining pin.
4. Remove parking rod plate from manual shaft.
5. Draw out parking rod from transaxle case.

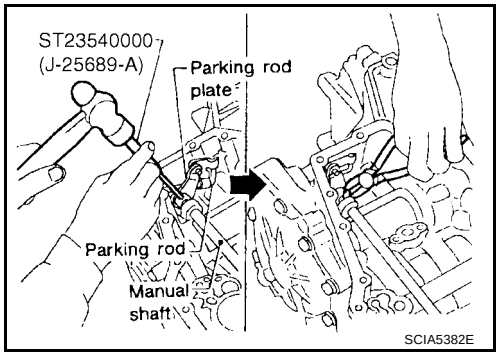

6. Pull out manual shaft retaining pin.
7. Remove manual shaft and manual plate from transaxle case.

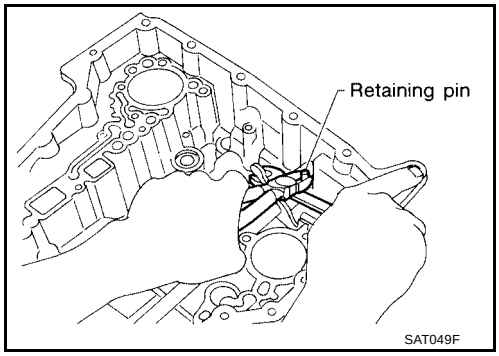

8. Remove manual shaft oil seal.

   CAUTION:
   Be careful not to scratch transaxle case.

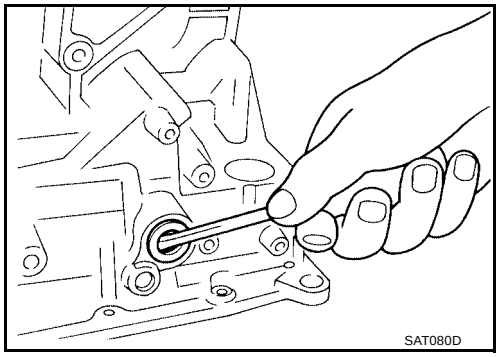

INSPECTION

- Check component parts for wear or damage. Replace if necessary.

INSTALLATION

1. Install manual shaft oil seal.

   CAUTION:
   - **Do not reuse oil seal.**
   - **Apply ATF to outer surface of oil seal.**

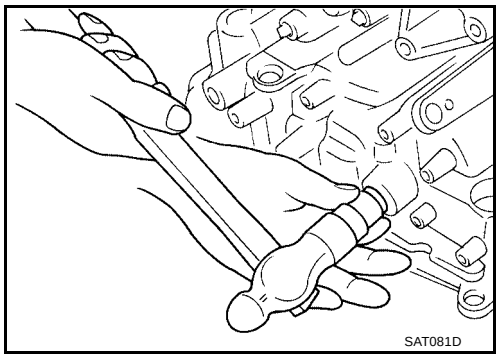

2. Install manual shaft and manual plate.

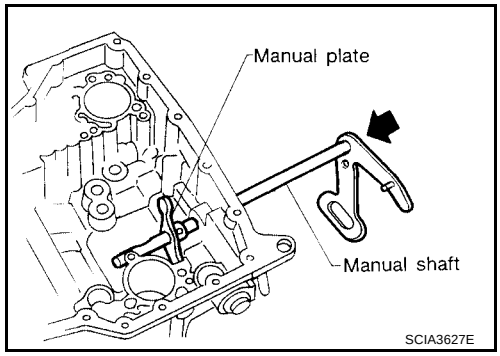

3. Align groove of manual shaft and hole of transaxle case.
4. Install manual shaft retaining pin up to bottom of hole.

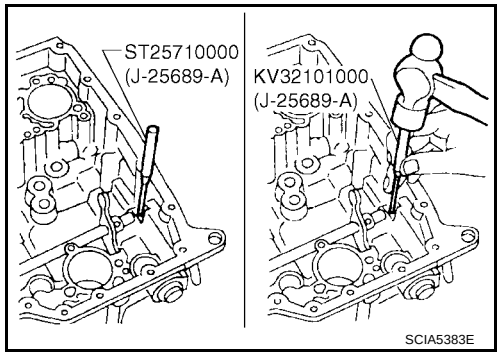

5. Install parking rod to parking rod plate.
6. Set parking rod assembly onto manual shaft and drive retaining pin.

CAUTION:
- **Do not reuse retaining pin.**
- **Both ends of pin should protrude.**

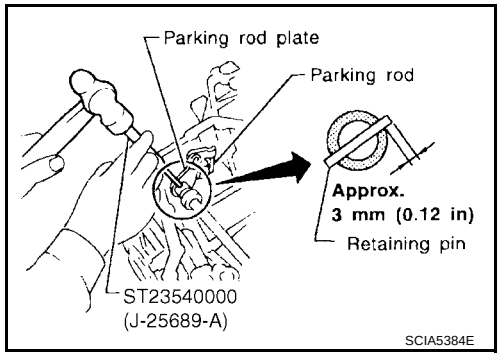

7. Drive manual plate retaining pin.

CAUTION:
- **Do not reuse retaining pin.**
- **Both ends of pin should protrude.**

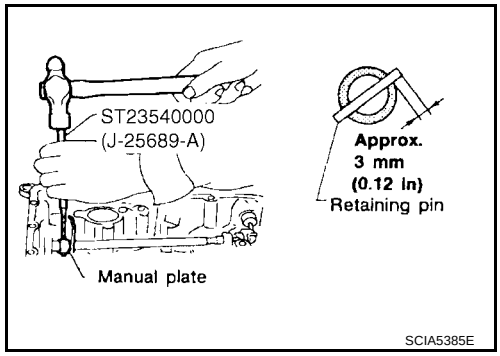

8. Install detent spring. Tighten detent spring bolts to the specified torque. Refer to AT-283, "COMPONENTS" .

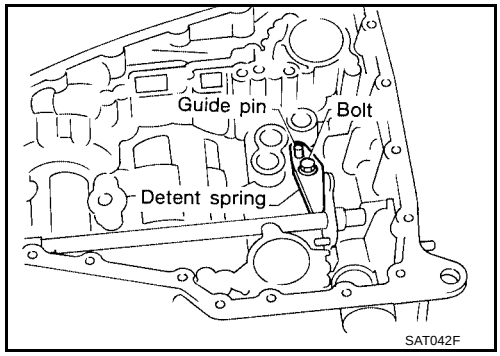

Oil Pump

UCS000RN

COMPONENTS

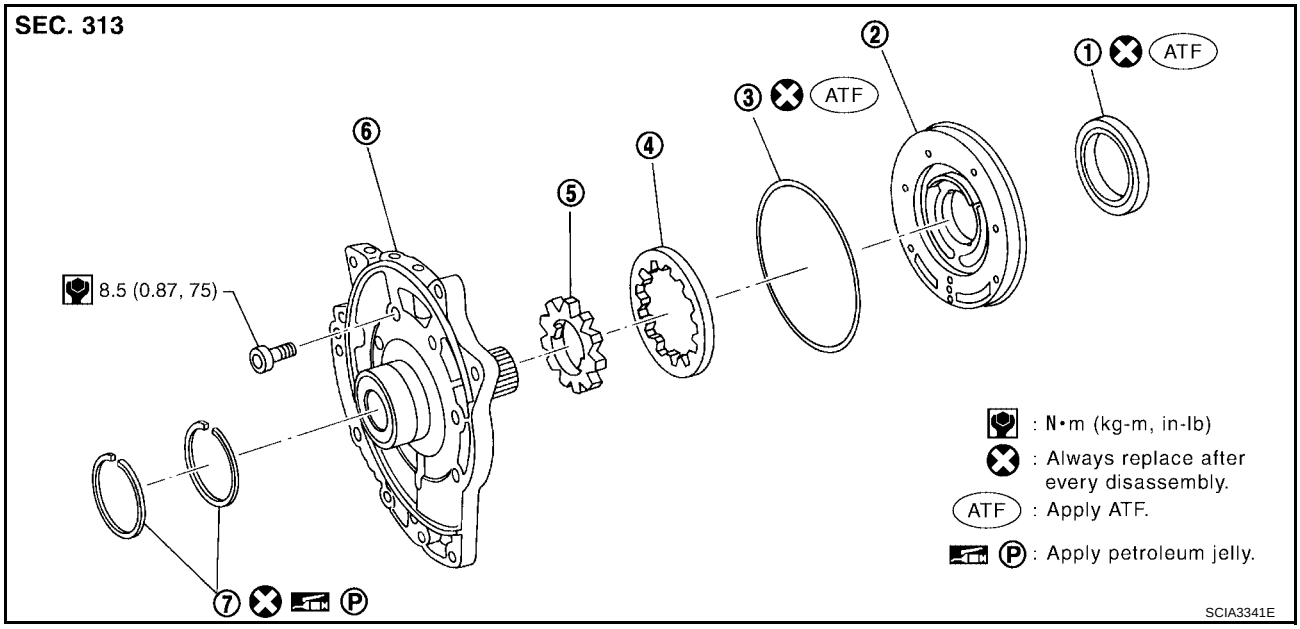

1. Oil seal
2. Oil pump housing
3. O-ring
4. Outer gear
5. Inner gear
6. Oil pump cover
7. Seal ring

DISASSEMBLY

1. Remove seal rings.

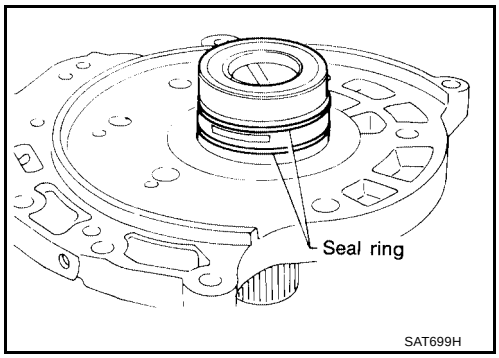

2. Loosen bolts in a crisscross pattern and remove oil pump cover.

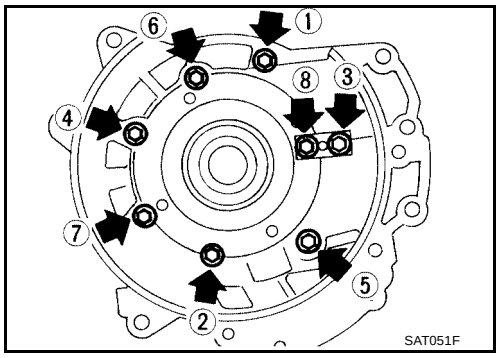

3. Remove inner and outer gear from oil pump housing.

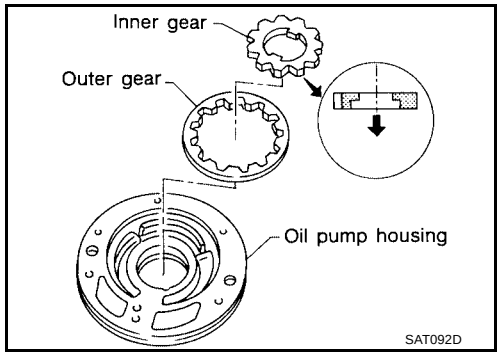

4. Remove O-ring from oil pump housing.

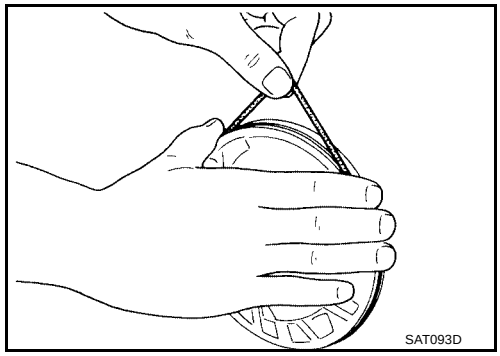

5. Remove oil pump housing oil seal.

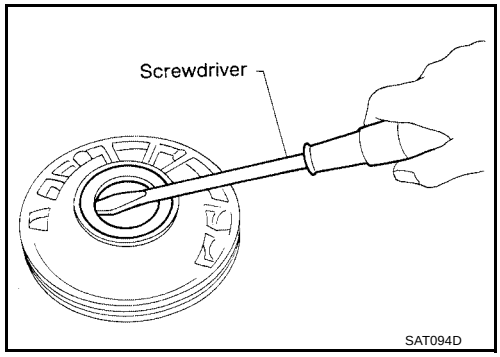

INSPECTION

Oil Pump Housing, Oil Pump Cover, Inner Gear and Outer Gear

- Check for wear or damage.

Side Clearances

- Measure side clearance of inner and outer gears in at least four places around each outside edge. Maximum measured values should be within specified positions.

  Standard clearance : 0.030 - 0.050 mm (0.0012 - 0.0020 in)

- If clearance is less than standard, select inner and outer gear as a set so that clearance is within specifications.

  Inner and outer gear:

  Refer to AT-364, "SERVICE DATA AND SPECIFICATIONS (SDS)" .

- If clearance is more than standard, replace whole oil pump assembly except oil pump cover.

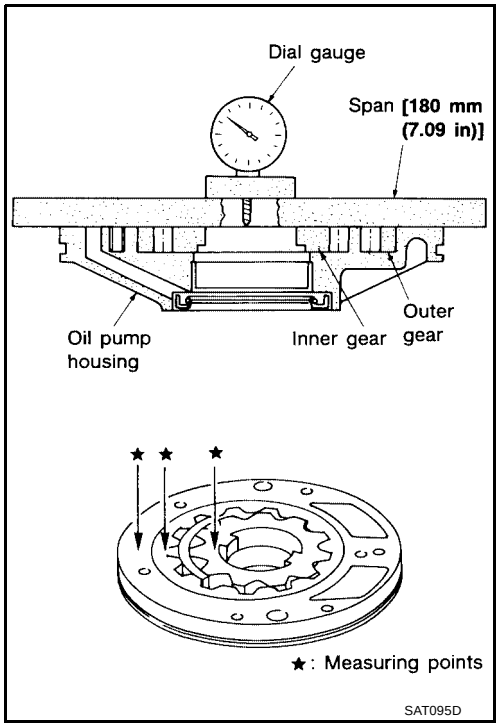

- Measure clearance between outer gear and oil pump housing.

  Standard clearance : 0.111 - 0.181 mm (0.0044 - 0.0071 in)

  Allowable limit : 0.181 mm (0.0071 in)

- If not within allowable limit, replace whole oil pump assembly except oil pump cover.

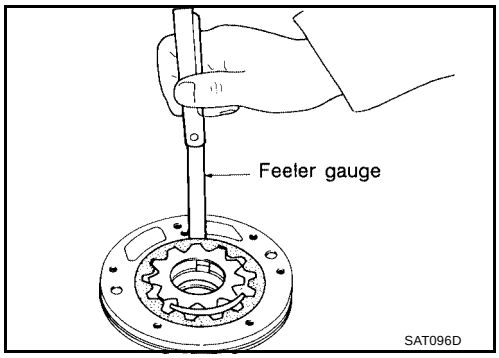

Seal Ring Clearance

- Measure clearance between seal ring and ring groove.

  Standard clearance : 0.1 - 0.25 mm (0.0039 - 0.0098 in)

  Allowable limit : 0.25 mm (0.0098 in)

- If not within allowable limit, replace oil pump cover assembly.

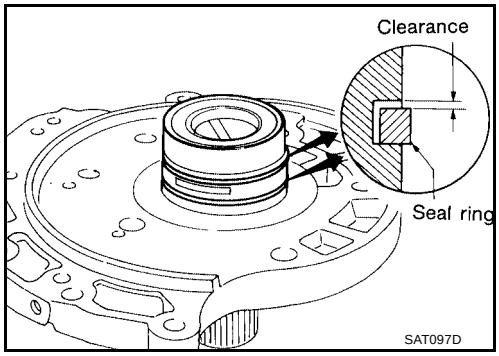

ASSEMBLY

1. Install oil seal on oil pump housing.

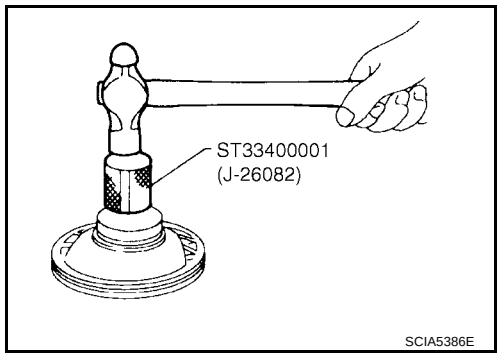

2. Install O-ring on oil pump housing.

CAUTION:
- **Do not reuse O-ring.**
- **Apply ATF to O-ring.**

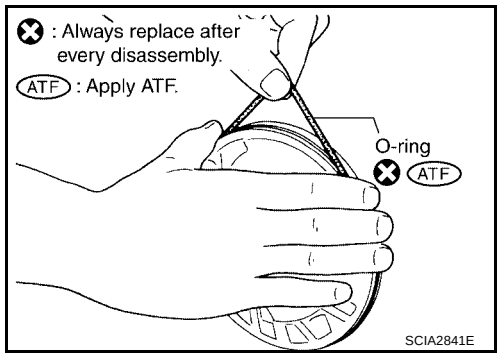

3. Install inner and outer gears on oil pump housing.

CAUTION:
Be careful of direction of inner gear.

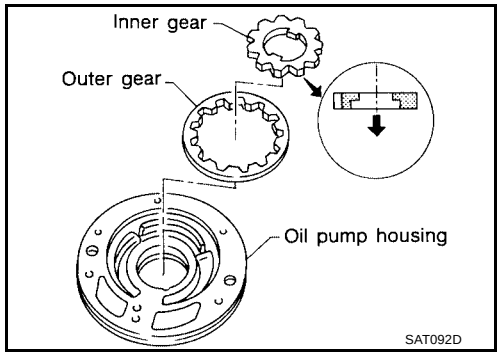

4. Install oil pump cover on oil pump housing.

a. Wrap masking tape around splines of oil pump cover assembly to protect seal. Position oil pump cover assembly on oil pump housing assembly, then remove masking tape.

b. Tighten bolts in a crisscross pattern. Tighten oil pump cover bolts to the specified torque. Refer to AT-286, "COMPONENTS".

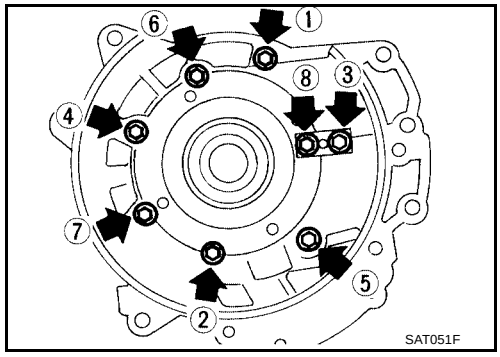

5. Install new seal rings carefully after packing ring groove with petroleum jelly.

CAUTION:

- **Do not spread gap of seal ring excessively while installing. The ring may be deformed.**
- **Do not reuse seal rings.**
- **Apply petroleum jelly to seal rings.**

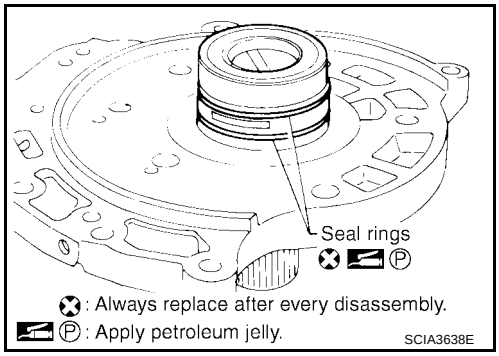

Control Valve Assembly

UCS000RO

COMPONENTS

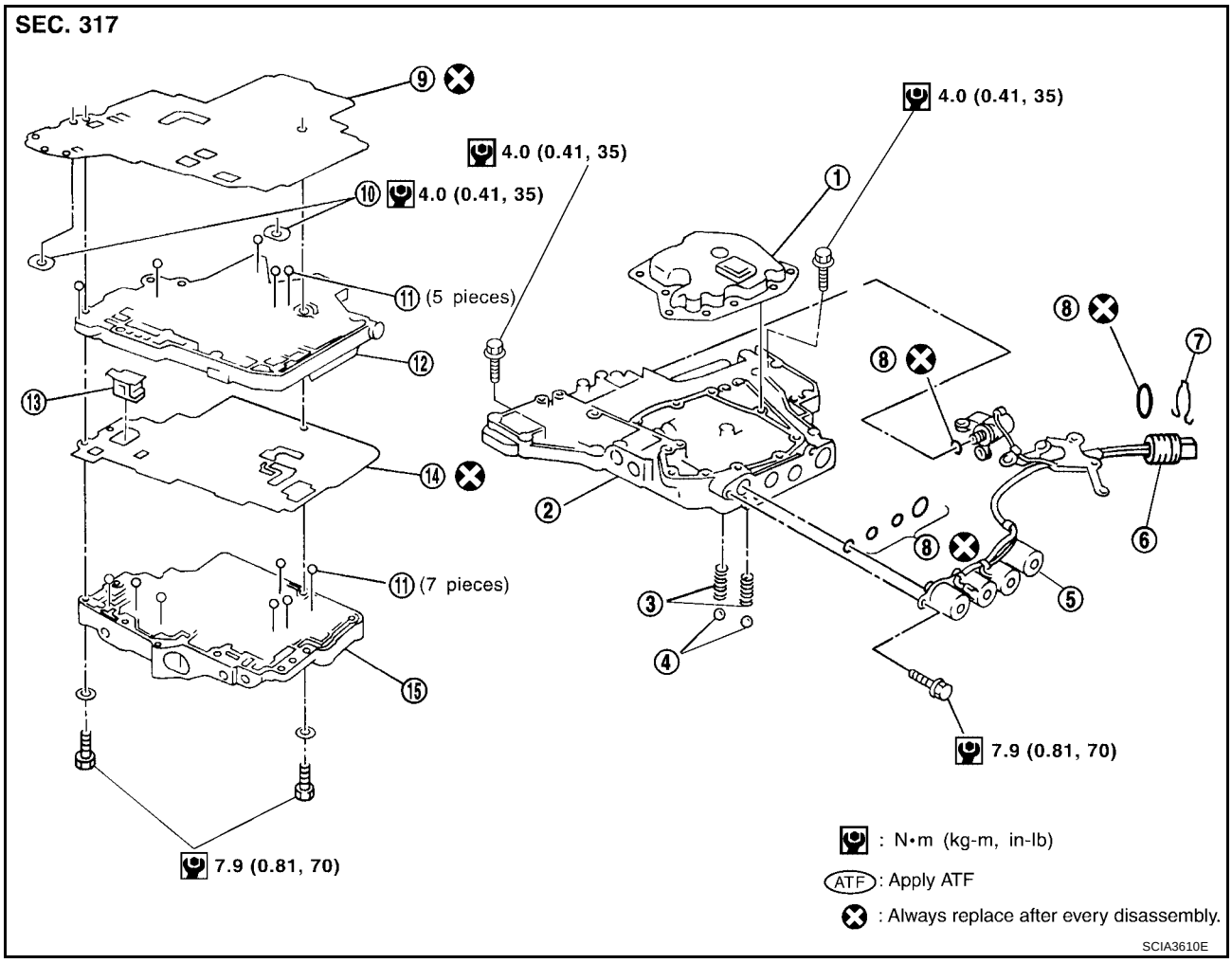

1.	Oil strainer	2.	Control valve lower body	3.	Oil cooler relief valve spring
4.	Check ball	5.	Solenoid valve assembly	6.	Terminal body
7.	Stopper ring	8.	O-rings	9.	Separating plate
10.	Support plate	11.	Steel ball	12.	Control valve inter body
13.	Pilot filter	14.	Separating plate	15.	Control valve upper body

DISASSEMBLY

Disassemble upper, inter and lower bodies.

Bolt length, number and location:

Bolt symbol	a	b	c	d	e	f	g
Bolt length "ℓ" mm (in)	13.5 (0.531)	58.0 (2.283)	40.0 (1.575)	66.0 (2.598)	33.0 (1.299)	78.0 (3.071)	18.0 (0.709)
Number of bolts	6	3	6	11	2	2	1

f: Reamer bolt and nut.

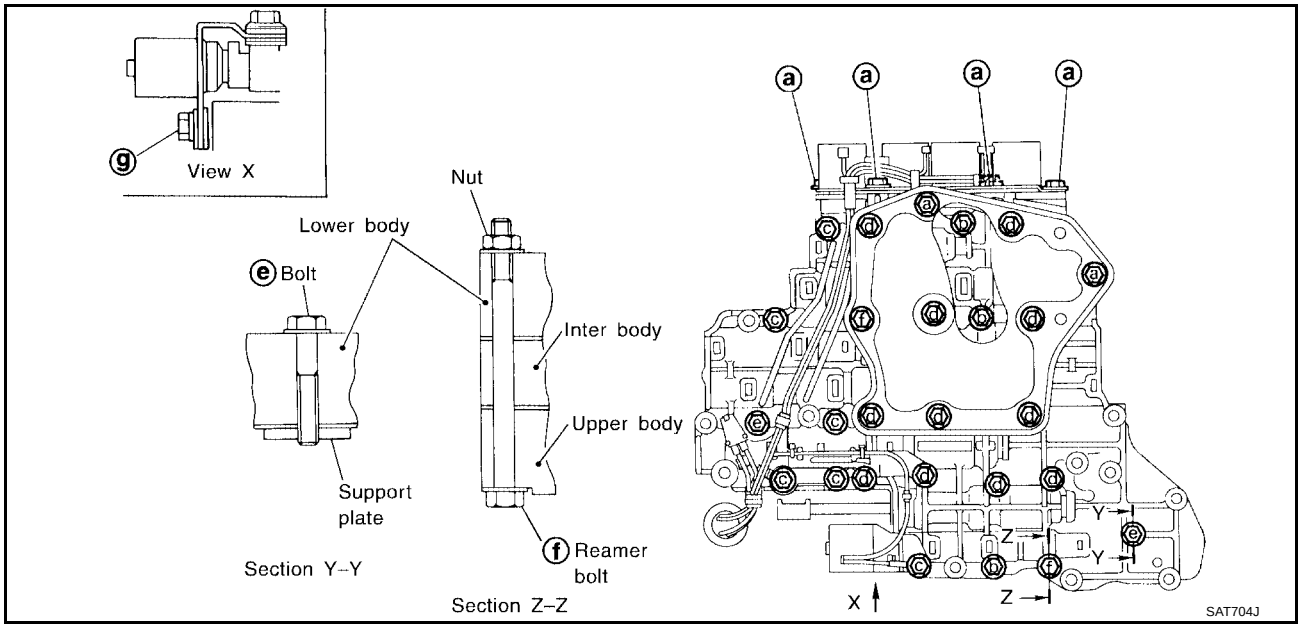

1. Remove bolts **a** , **d** , reamer bolt **f** and nut and remove oil strainer from control valve assembly.

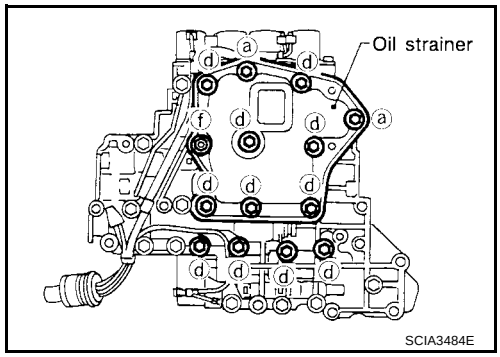

2. Remove solenoid valve assembly and line pressure solenoid valve from control valve assembly.

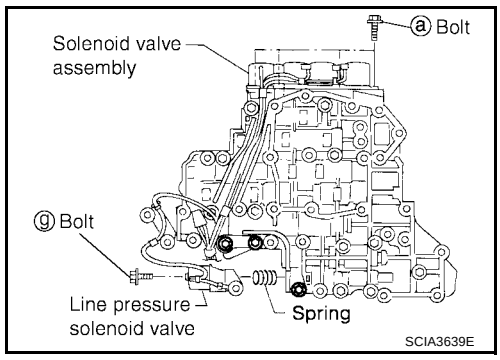

3. Remove O-rings from solenoid valves and terminal body.

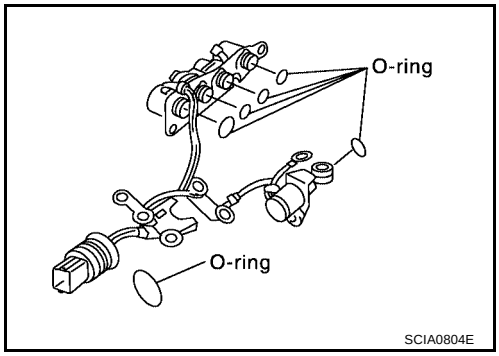

4. Place upper body facedown, and remove bolts **b** , **c** , **f** and nut .

   CAUTION:
   Remove bolts with upper body facing down, because upper body and inter body may come off and steel ball may fall and be lost.

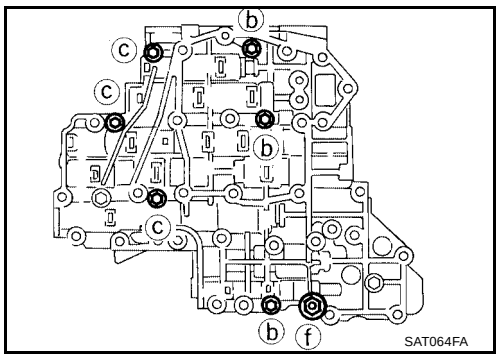

5. Remove inter body from lower body.

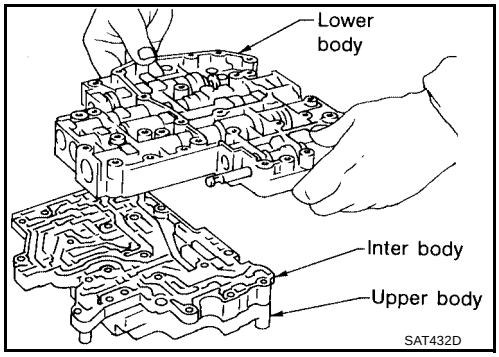

6. Turn over lower body.
7. Remove bolts **e** , separating plate and support plate from lower body.

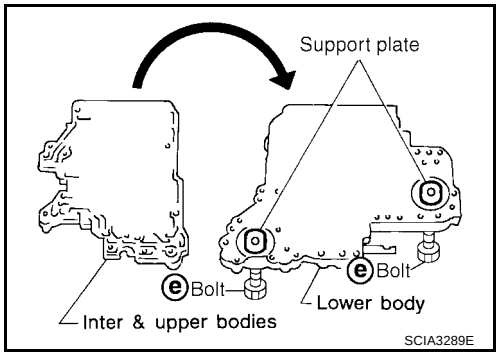

8. Remove check balls and oil cooler relief valve springs from lower body.

   CAUTION:
   Be careful not to lose check balls and oil cooler relief valve springs.

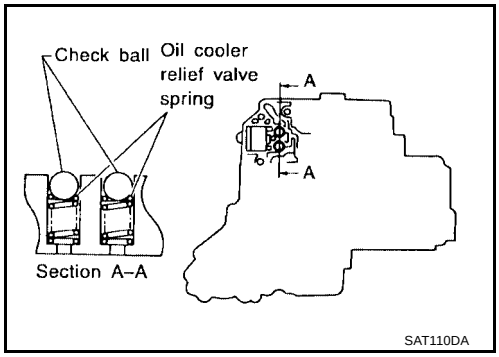

9. Remove inter body from upper body.

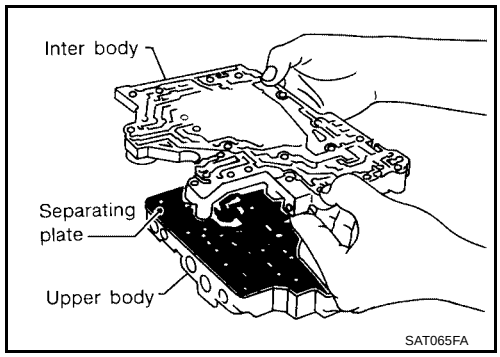

10. Check to see that steel balls are properly positioned in inter body and then remove them.

    CAUTION:
    Be careful not to lose steel balls.

11. Remove pilot filter from upper body.

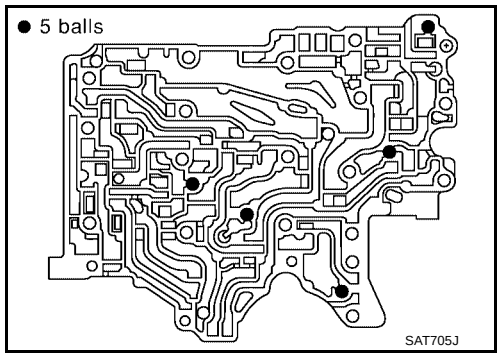

12. Check to see that steel balls are properly positioned in upper body and then remove them.

    CAUTION:
    Be careful not to lose steel balls.

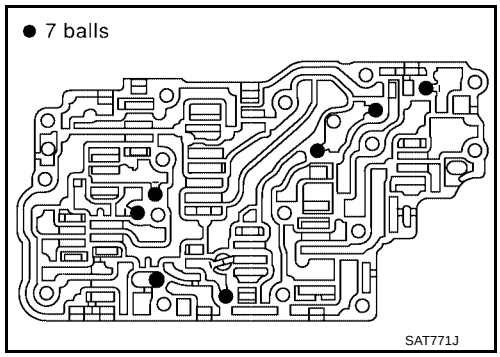

INSPECTION

Lower and Upper Bodies

CAUTION:
Be careful not to lose these parts.

- Check to see that retainer plates are properly positioned in lower body.

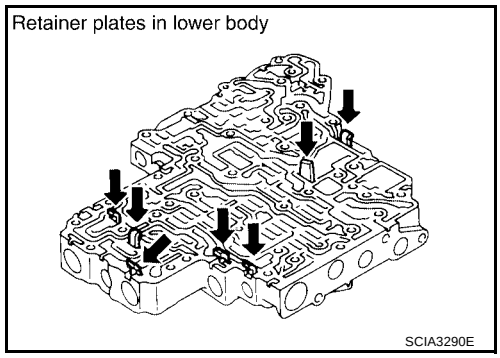

- Check to see that retainer plates are properly positioned in upper body.

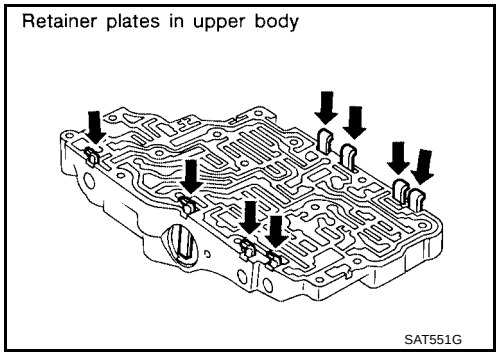

Oil Strainer

- Check wire netting of oil strainer for damage.

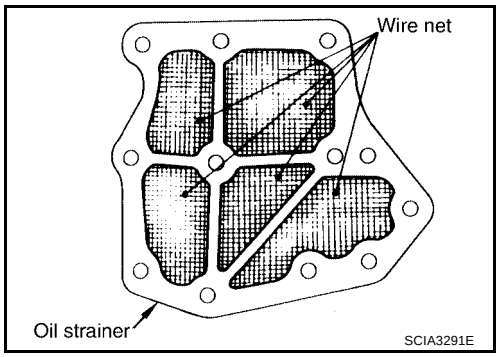

Shift Solenoid Valves “A” and “B”, Line Pressure Solenoid Valve, Torque Converter Clutch Solenoid Valve and Overrun Clutch Solenoid Valve

- Measure resistance.
- For shift solenoid valve A, refer to AT-171, "Diagnostic Procedure" .
- For shift solenoid valve B, refer to AT-176, "Diagnostic Procedure" .
- For line pressure solenoid valve, refer to AT-165, "Diagnostic Procedure" .
- For torque converter clutch solenoid valve, refer to AT-152, "Diagnostic Procedure" .
- For overrun clutch solenoid valve, refer to AT-187, "Diagnostic Procedure" .

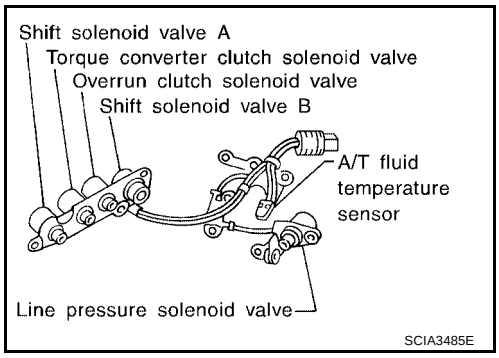

Oil Cooler Relief Valve Spring

- Check springs for damage or deformation.
- Measure free length and outer diameter.

Inspection standard **: Refer to AT-365, "Control Valves" .**

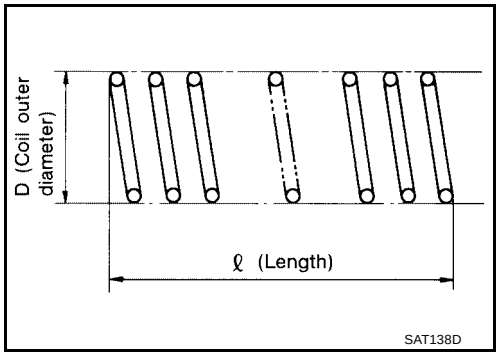

ASSEMBLY

1. Install upper, inter and lower body.

a. Place oil circuit of upper body face up. Install steel balls in their proper positions.

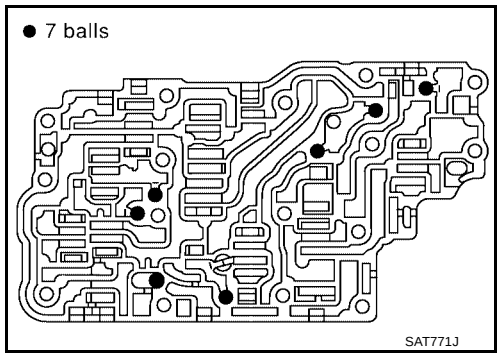

b. Install reamer bolts **f** from bottom of upper body. Using reamer bolts as guides, install separating plate as a set.

CAUTION:
Do not reuse separating plate.

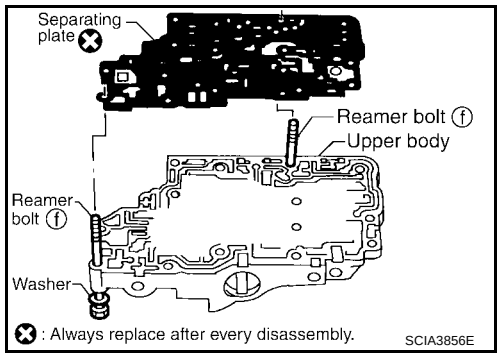

c. Install pilot filter.

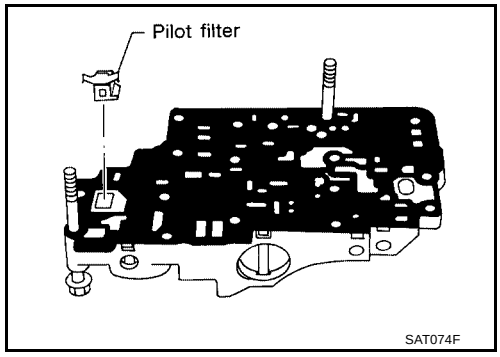

d. Place lower body as shown in figure (side of inter body face up). Install steel balls in their proper positions.

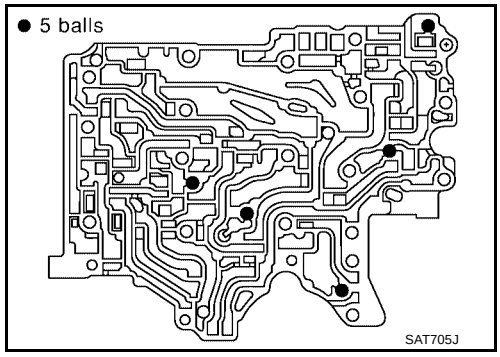

e. Install inter body on upper body using reamer bolts **f** as guides.

CAUTION:
Be careful not to dislocate or drop steel balls.

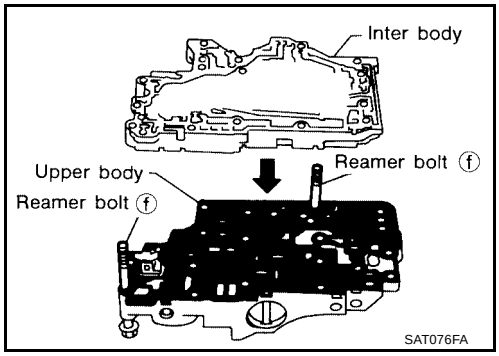

f. Install check balls and oil cooler relief valve springs in their proper positions in lower body.

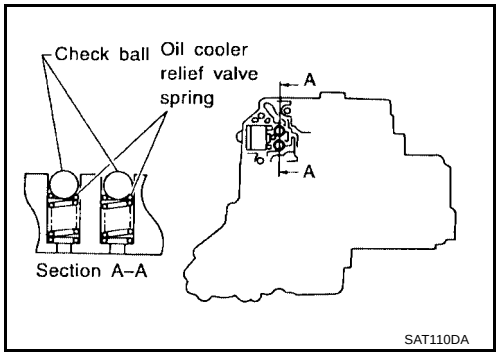

g. Install bolts **e** from bottom of lower body. Using bolts **e** as guides, install separating plate as a set.

CAUTION:
Do not reuse separating plate.

h. Temporarily install support plates on lower body.

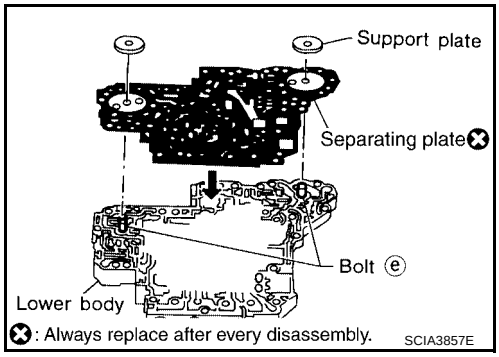

i. Install lower body on inter body using reamer bolts **f** as guides and tighten reamer bolts **f** slightly.

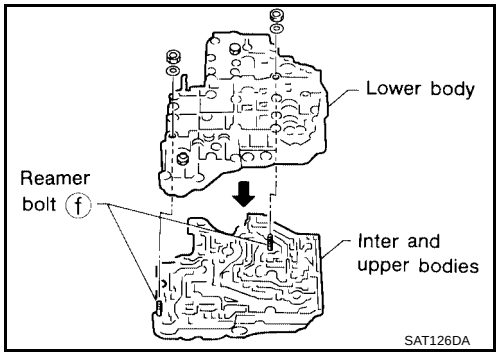

2. Install O-rings to solenoid valves and terminal body.

CAUTION:
- **Do not reuse O-rings.**
- **Apply ATF to O-rings.**

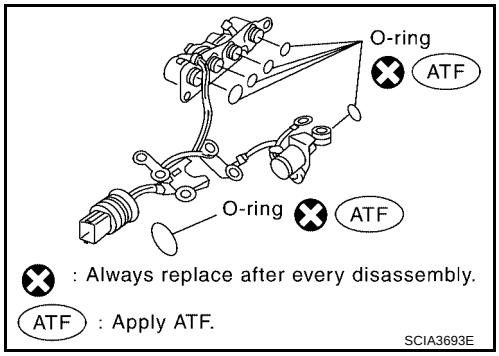

3. Install and tighten bolts.

Bolt length, number and location:

Bolt symbol	a	b	c	d	e	f	g
Bolt length " ℓ " mm (in)	13.5 (0.531)	58.0 (2.283)	40.0 (1.575)	66.0 (2.598)	33.0 (1.299)	78.0 (3.071)	18.0 (0.709)
Number of bolts	6	3	6	11	2	2	1

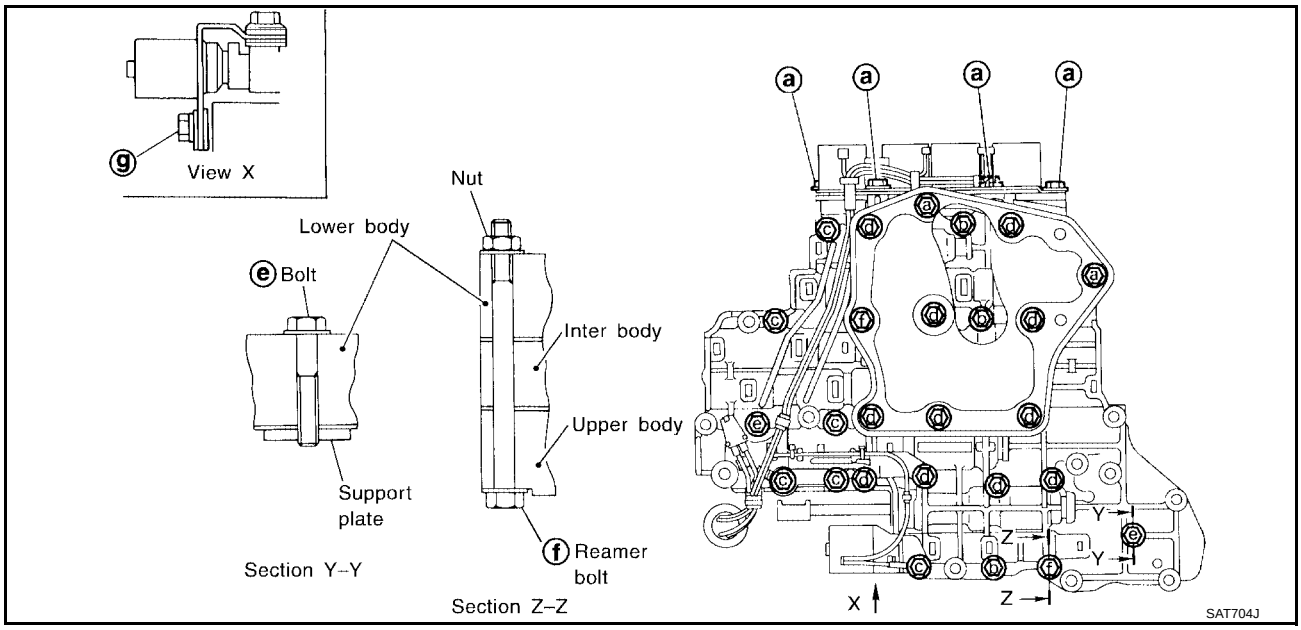

a. Install and tighten bolts **b** to specified torque.

Specified torque

: Refer to AT-290, "COMPONENTS" .

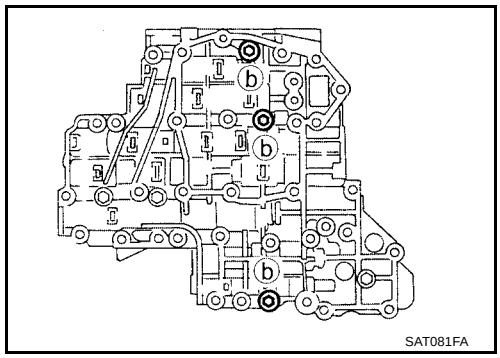

b. Install solenoid valve assembly and line pressure solenoid valve to lower body.

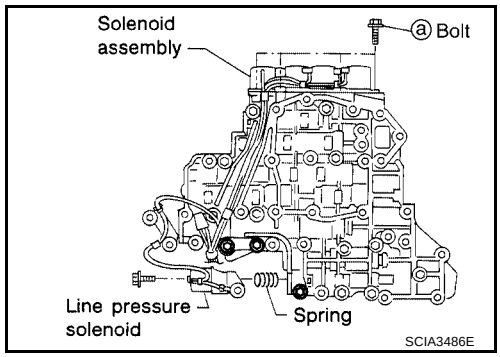

c. Set oil strainer, then tighten bolts **a** , **d** , **f** and nuts to specified torque.

Specified torque

: Refer to AT-290, "COMPONENTS" .

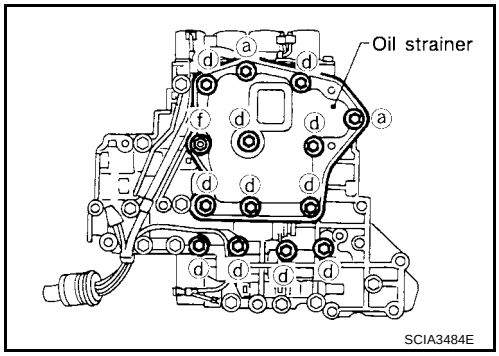

d. Tighten bolts **e** to specified torque.

Specified torque

: Refer to AT-290, "COMPONENTS" .

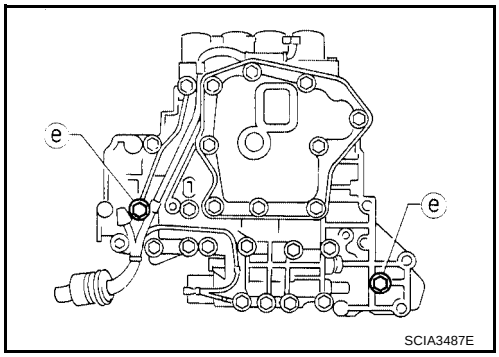

Control Valve Upper Body

UCS000RP

COMPONENTS

Apply ATF to all components before installation.

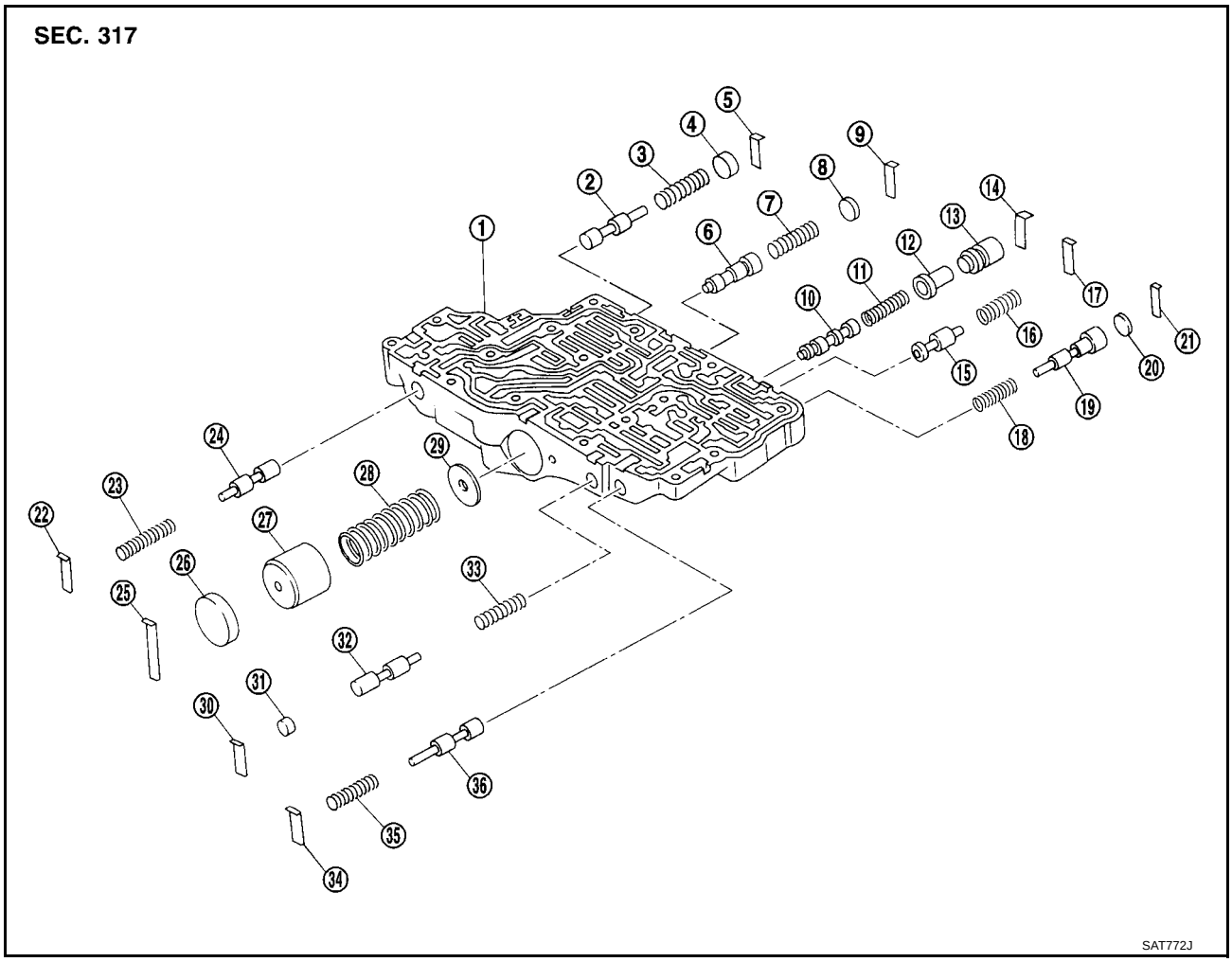

1. Control valve upper body	2. Cooler check valve	3. Return spring
4. Plug	5. Retainer plate	6. 1-2 accumulator valve
7. Return spring	8. Plug	9. Retainer plate
10. Torque converter clutch control valve	11. Return spring	12. Torque converter clutch control plug
13. Torque converter clutch control sleeve	14. Retainer plate	15. Torque converter relief valve
16. Return spring	17. Retainer plate	18. Return spring
19. Overrun clutch reducing valve	20. Plug	21. Retainer plate
22. Retainer plate	23. Return spring	24. Pilot valve
25. Retainer plate	26. Plug	27. 1-2 accumulator piston
28. Return spring	29. 1-2 accumulator retainer plate	30. Retainer plate
31. Plug	32. 1st reducing valve	33. Return spring
34. Retainer plate	35. Return spring	36. 3-2 timing valve

DISASSEMBLY

1. Remove valves at retainer plates.

   CAUTION:
   Do not use a magnetic pick-up tool.

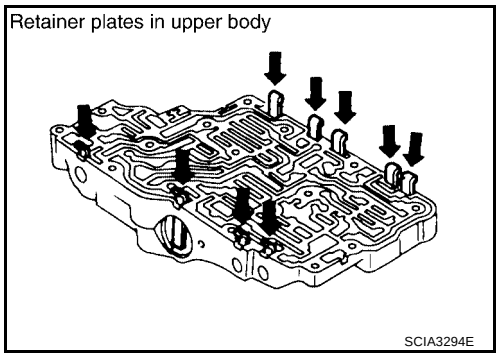

a. Use a screwdriver to remove retainer plates.

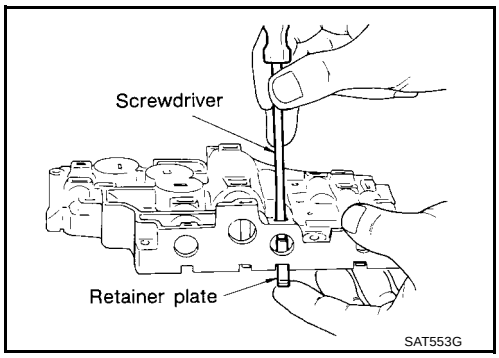

b. Remove retainer plates while holding spring, plugs or sleeves.
   - **Remove plugs slowly to prevent internal parts from jumping out.**

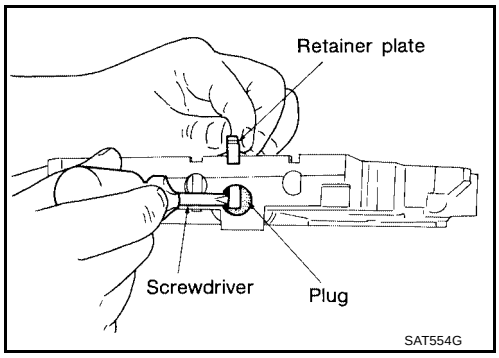

c. Place mating surface of valve body face down, and remove internal parts.
   - **If a valve is hard to remove, place valve body face down and lightly tap it with a soft hammer.**
   - **Be careful not to drop or damage valves and sleeves.**

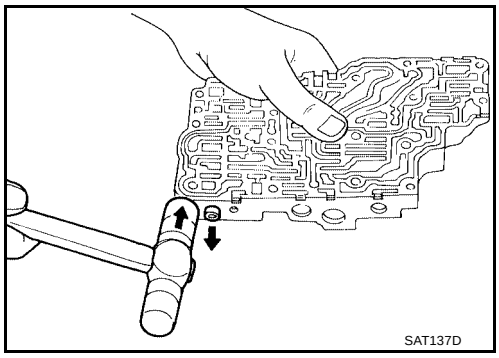

INSPECTION

Valve Spring

- Measure free length and outer diameter of each valve spring. Also check for damage or deformation.

  Inspection standard : Refer to AT-365, "Control Valves" .

- Replace valve springs if deformed or fatigued.

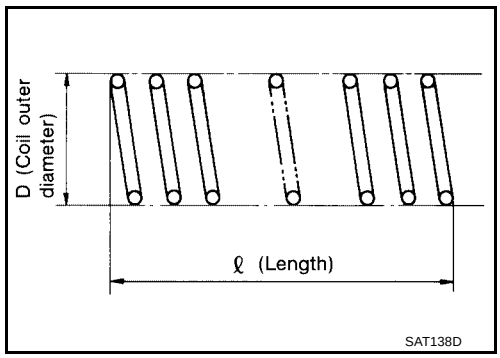

Control Valves

- Check sliding surfaces of valves, sleeves and plugs.

ASSEMBLY

- **Lay control valve body down when installing valves. Do not stand the control valve body upright.**

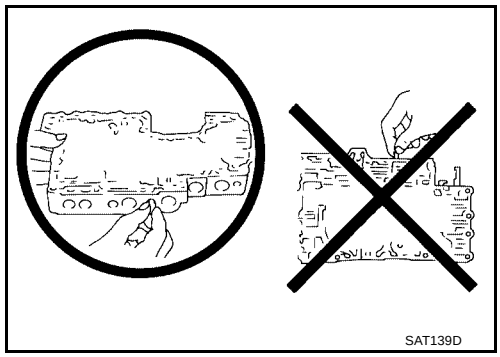

1. Lubricate the control valve body and all valves with ATF. Install control valves by sliding them carefully into their bores.

   CAUTION:
   - **Install each control valve one by one.**
   - **Install control valves after checking, because some of them are similar.**
   - **Be careful not to scratch or damage valve body.**

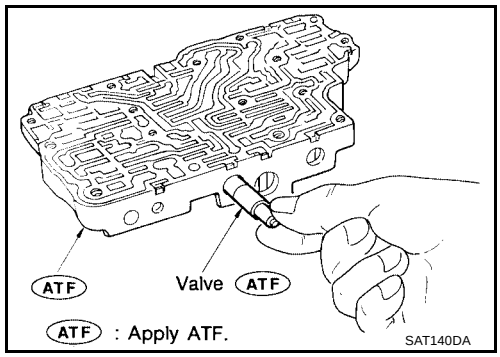

   - Wrap a small screwdriver with vinyl tape and use it to insert the valves into their proper positions.

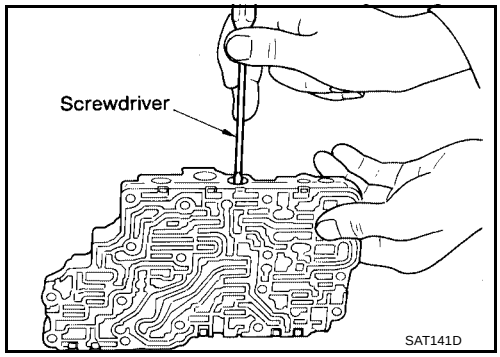

1-2 Accumulator Valve

- Install 1-2 accumulator valve. Align 1-2 accumulator retainer plate from opposite side of control valve body.
- Install return spring, 1-2 accumulator piston and plug.

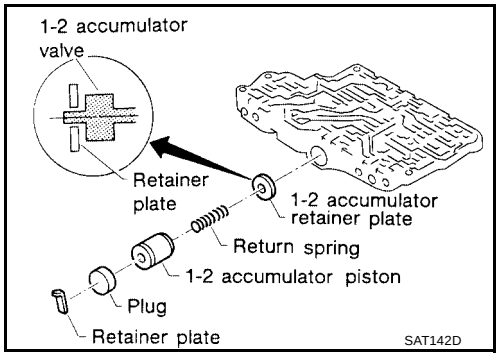

1. Install retainer plates.
   - While pushing plug or return spring, install retainer plate.

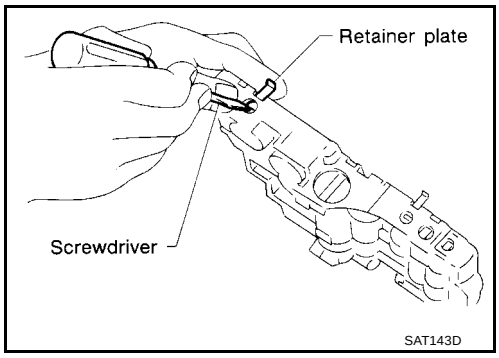

Retainer Plate (Upper Body)

Unit: mm (in)

No.	Name of control valve	Width A	Length B
22	Pilot valve	6.0 (0.236)	21.5 (0.846)
30	1st reducing valve		
34	3-2 timing valve		
17	Torque converter relief valve		
9	1-2 accumulator valve		40.5 (1.594)
25	1-2 accumulator piston		
21	Overrun clutch reducing valve		24.0 (0.945)
5	Cooler check valve		
14	Torque converter clutch control valve		28.0 (1.102)

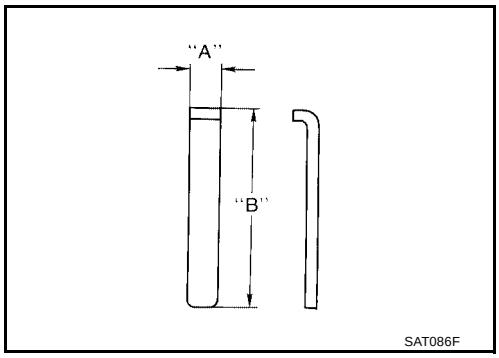

- Install proper retainer plates.
  Refer to AT-299, "COMPONENTS" .

Control Valve Lower Body

UCS000RQ

COMPONENTS

Apply ATF to all components before installation.

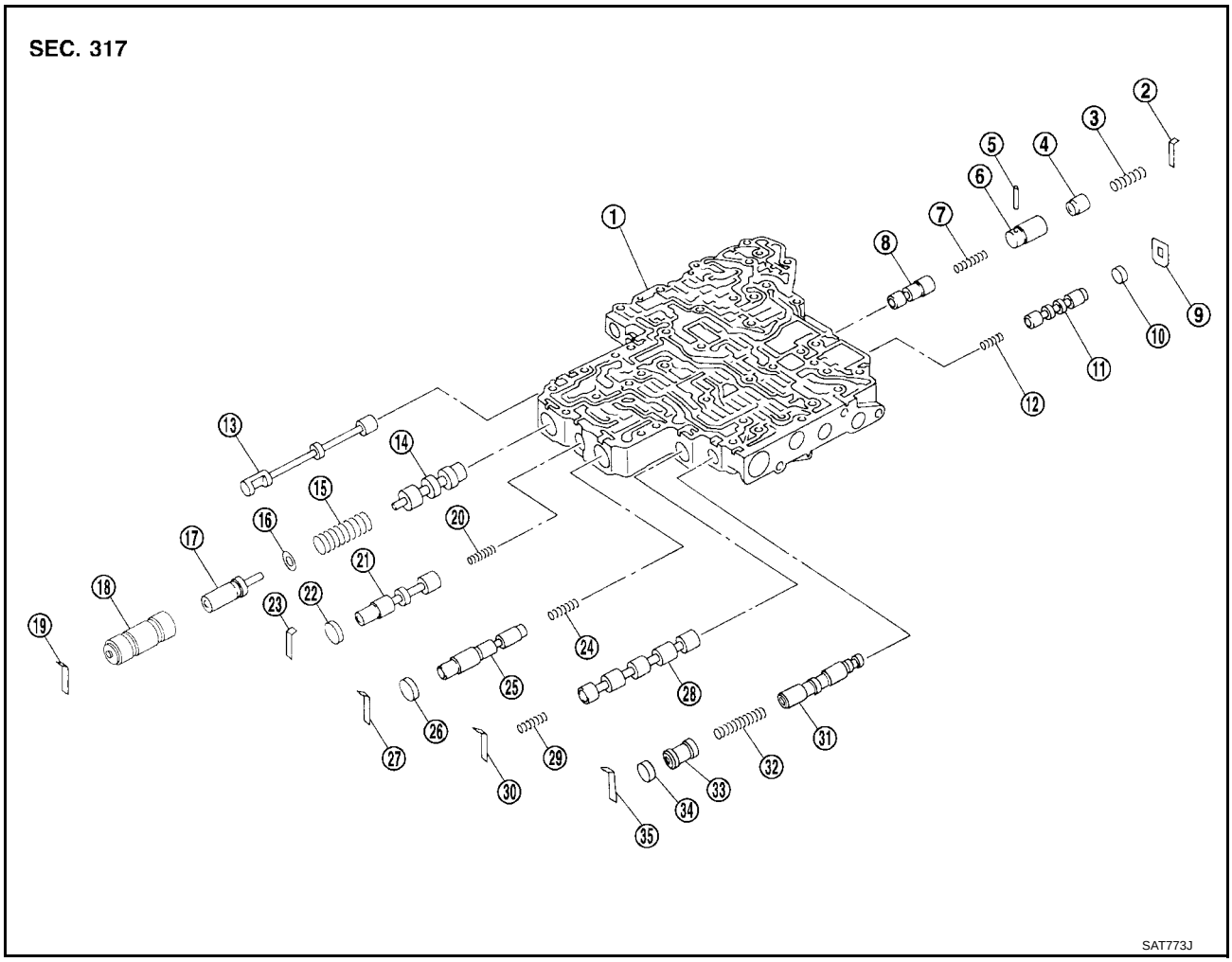

1. Control valve lower body	2. Retainer plate	3. Return spring
4. Piston	5. Parallel pin	6. Sleeve
7. Return spring	8. Pressure modifier valve	9. Retainer plate
10. Plug	11. Shift valve B	12. Return spring
13. Manual valve	14. Pressure regulator valve	15. Return spring
16. Spring seat	17. Plug	18. Sleeve
19. Retainer plate	20. Return spring	21. Overrun clutch control valve
22. Plug	23. Retainer plate	24. Return spring
25. Accumulator control valve	26. Plug	27. Retainer plate
28. Shift valve A	29. Return spring	30. Retainer plate
31. Shuttle valve	32. Return spring	33. Plug
34. Plug	35. Retainer plate	

DISASSEMBLY

- Remove valves at retainer plate.
  For removal procedures, refer to AT-303, "COMPONENTS" .

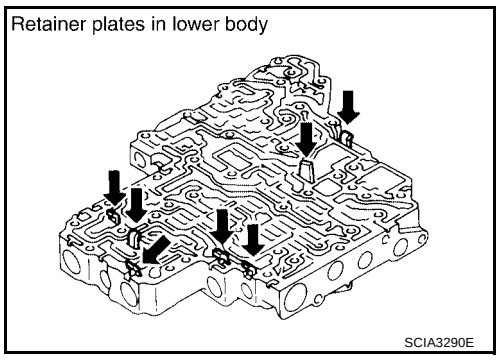

INSPECTION

Valve Springs

- Check each valve spring for damage or deformation. Also measure free length and outer diameter.

Inspection standard : **Refer to AT-365, "Control Valves" .**

- Replace valve springs if deformed or fatigued.

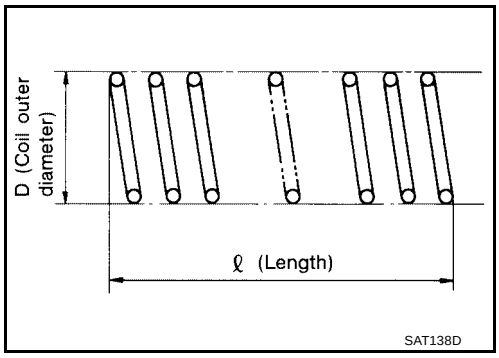

Control Valves

- Check sliding surfaces of control valves, sleeves and plugs for damage.

ASSEMBLY

- Install control valves.
  For installation procedures, refer to AT-303, "COMPONENTS" .

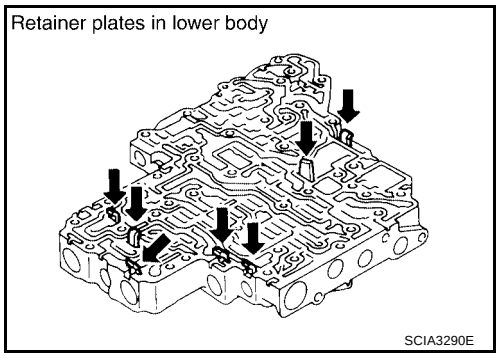

Retainer Plate (Lower Body)

Unit: mm (in)

No.	Name of control valve and plug	Width A	Length B	Type
19	Pressure regulator valve	6.0 (0.236)	28.0 (1.102)	I
27	Accumulator control valve			
30	Shift valve A			
23	Overrun clutch control valve			
2	Pressure modifier valve			
35	Shuttle valve			
9	Shift valve B	—	—	II

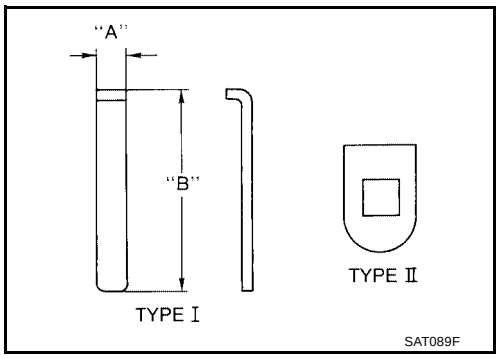

- Install proper retainer plates.
  Refer to AT-303, "COMPONENTS" .

Reverse Clutch

UCS000RR

COMPONENTS

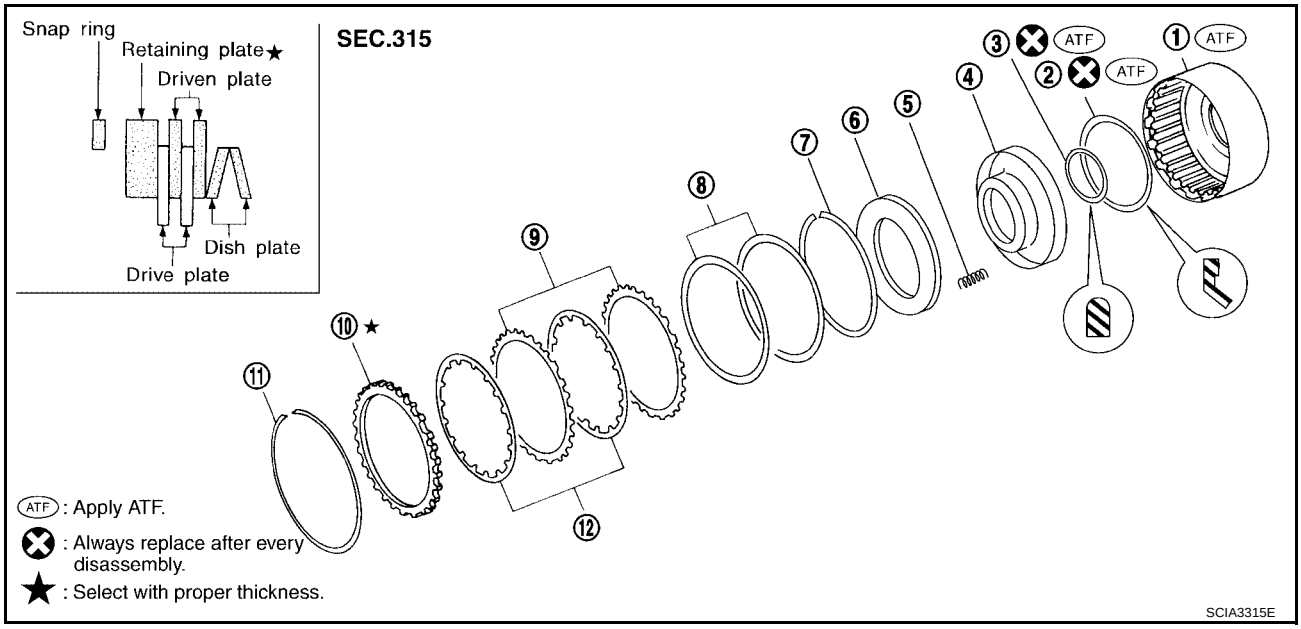

1.	Reverse clutch drum	2.	Seal ring	3.	D-ring
4.	Reverse clutch piston	5.	Return spring	6.	Spring retainer
7.	Snap ring	8.	Dish plate	9.	Driven plate
10.	Retaining plate	11.	Snap ring	12.	Drive plate

DISASSEMBLY

1. Check operation of reverse clutch

a. Install seal ring onto drum support of oil pump cover and install reverse clutch assembly. Apply compressed air to oil hole.

b. Check to see that retaining plate moves to snap ring.

c. If retaining plate does not contact snap ring:
   - D-ring might be damaged.
   - Oil seal might be damaged.
   - Fluid might be leaking past piston check ball.

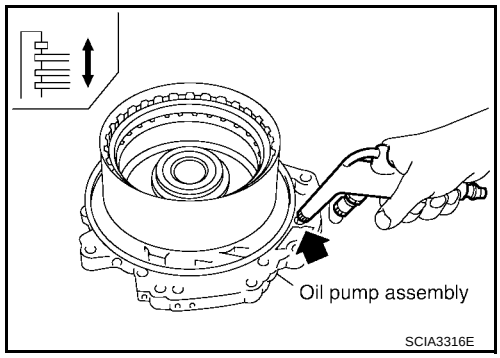

2. Remove snap ring.

   CAUTION:
   Do not expand snap ring excessively.

3. Remove drive plates, driven plates, retaining plate, and dish plates.

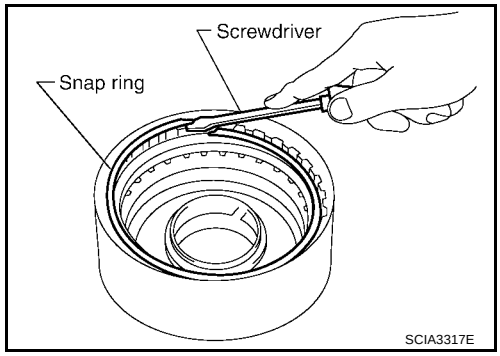

4. Set Tool on spring retainer and remove snap ring from reverse clutch drum while compressing return springs.

   CAUTION:
   - **Set Tool directly over springs.**
   - **Do not expand snap ring excessively.**
5. Remove spring retainer and return springs.

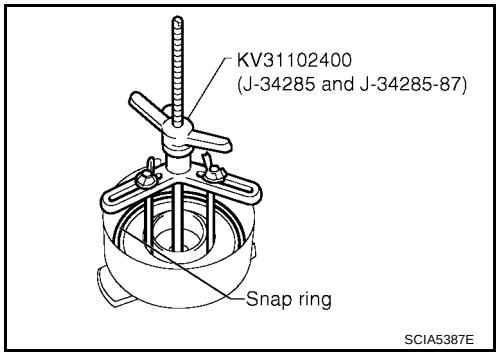

6. Remove piston from reverse clutch drum by turning it.
7. Remove D-ring and oil seal from piston.

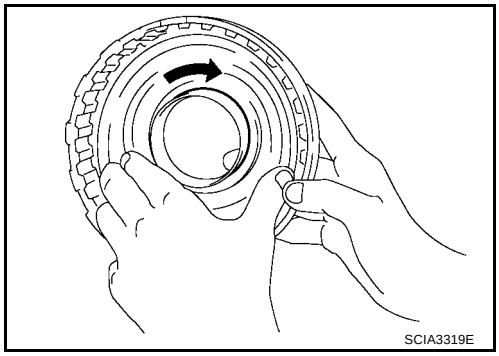

INSPECTION

Reverse Clutch Snap Ring, Spring Retainer and Return Springs

- Check for deformation, fatigue or damage.
  If necessary, replace.

Reverse Clutch Drive Plates

- Check facing for burns, cracks or damage.
- Measure thickness of facing.

  Thickness of drive plate:

  Standard : 1.6 mm (0.063 in)

  Wear limit : 1.4 mm (0.055 in)
- If not within wear limit, replace.

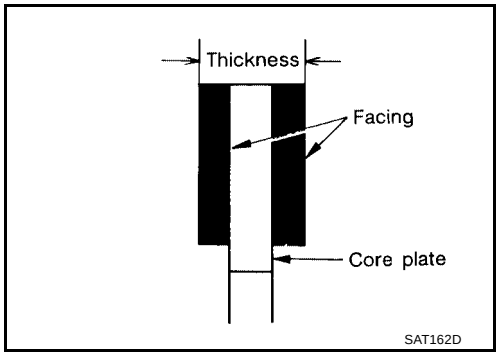

Reverse Clutch Dish Plates

- Check for deformation or damage.
- Measure thickness of dish plate.

  Thickness of dish plate : 3.18 mm (0.1252 in)
- If deformed or fatigued, replace.

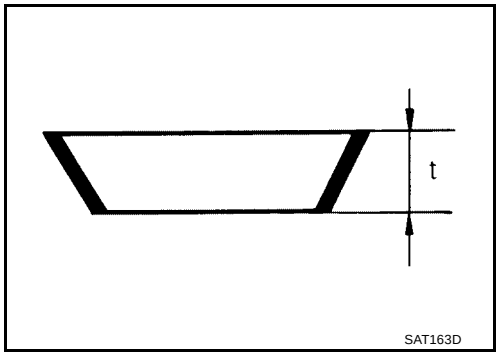

Reverse Clutch Piston

- Make sure that check balls are not fixed.
- Apply compressed air to check ball oil hole opposite the return spring. Make sure there is no air leakage.
- Apply compressed air to oil hole on return spring side to make sure that air leaks past ball.

ASSEMBLY

1. Install D-ring and oil seal on piston.

   CAUTION:
   - **Take care with the direction of oil seal.**
   - **Apply ATF to both parts.**

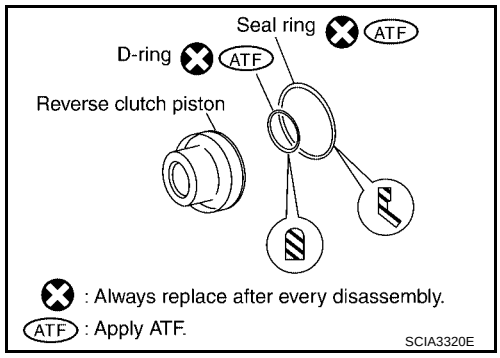

2. Install piston assembly by turning it slowly.

   CAUTION:
   Apply ATF to inner surface of drum.

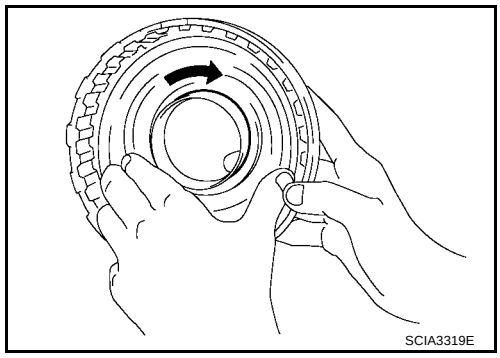

3. Install return springs and spring retainer on piston.

   CAUTION:
   Do not expand snap ring excessively.

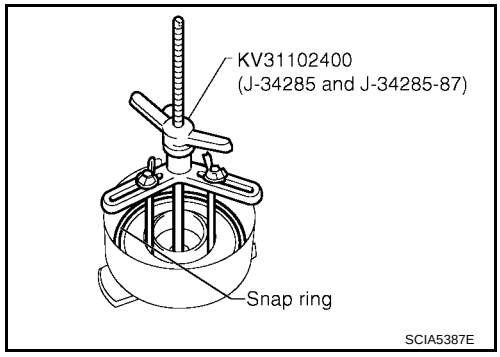

4. Set Tool on spring retainer and install snap ring while compressing return springs.

   CAUTION:
   Set Tool directly over return springs.

5. Install drive plates, driven plates, retaining plate and dish plates.

   CAUTION:
   Take care with order of plates.

6. Install snap ring.

   CAUTION:
   Do not expand snap ring excessively.

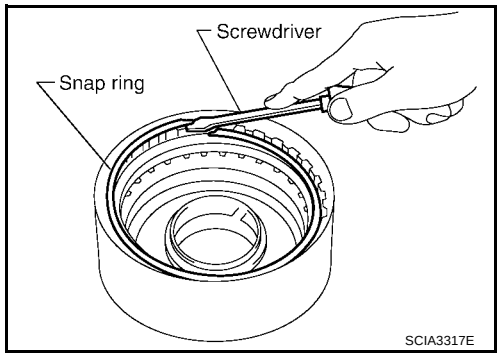

7. Measure clearance between retaining plate and snap ring. If not within allowable limit, select proper retaining plate.

Specified clearance

Standard	**: 0.5 - 0.8 mm (0.020 - 0.031 in)**
Allowable limit	**: 1.2 mm (0.047 in)**
Retaining plate	**: Refer to AT-366, "REVERSE CLUTCH" .**

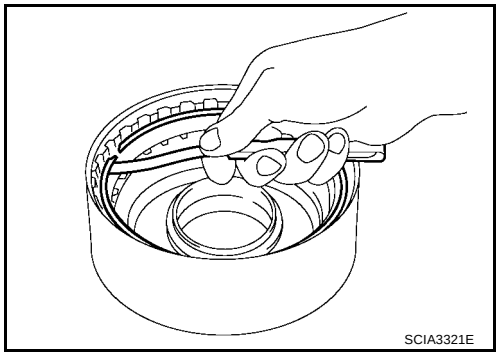

8. Check operation of reverse clutch.

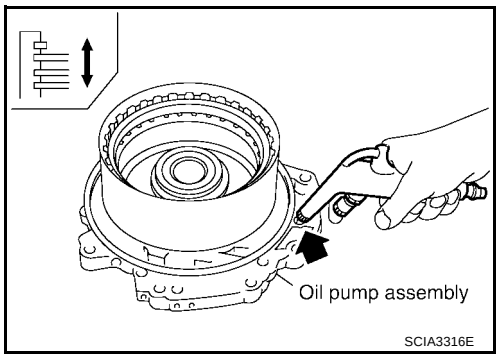

High Clutch

UCS000RS

COMPONENTS

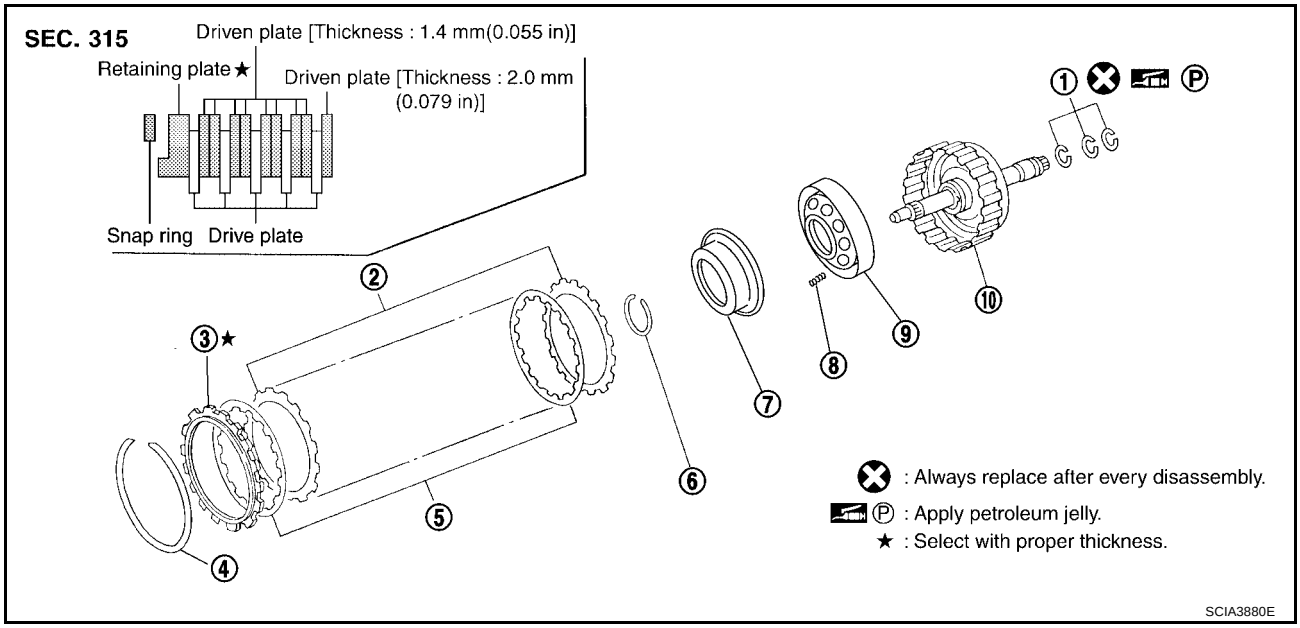

1. Seal ring	2. Driven plate	3. Retaining plate
4. Snap ring	5. Drive plate	6. Snap ring
7. Cancel force cover	8. Return spring	9. Input clutch piston
10. Input shaft assembly (High clutch drum)		

DISASSEMBLY

1. Check operation of high clutch.

a. Apply compressed air to oil hole of input shaft with nylon cloth.

CAUTION:
Stop up hole on opposite side of input shaft with nylon cloth.

b. Check to see that retaining plate moves to snap ring.

c. If retaining plate does not contact snap ring:
- D-ring might be damaged.
- Oil seal might be damaged.
- Fluid might be leaking past piston check ball.

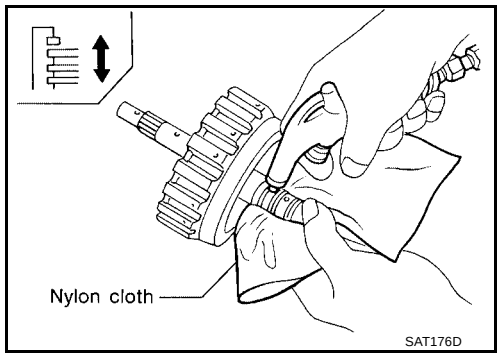

2. Remove seal rings from input shaft.

CAUTION:
Always replace when removed.

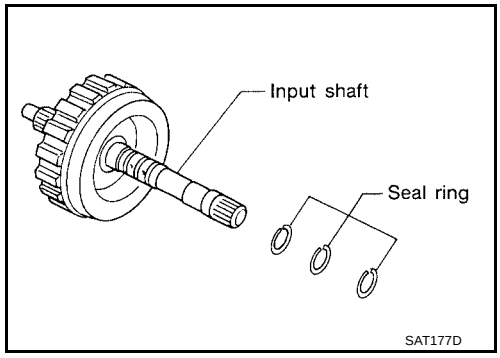

3. Remove snap ring.

CAUTION:
Do not expand snap ring excessively.

4. Remove drive plates, driven plates and retaining plate.

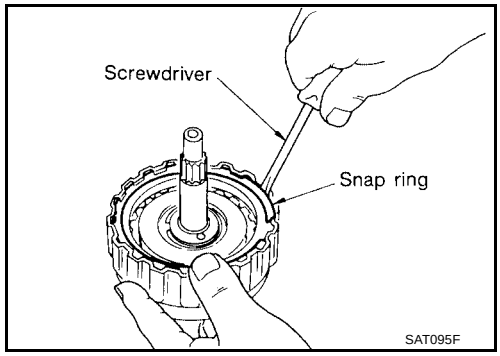

5. Set Tool on cancel force cover and remove snap ring from high clutch drum while compressing return springs.

CAUTION:
- **Set Tool directly over springs.**
- **Do not expand snap ring excessively.**

6. Remove spring retainer and return springs.

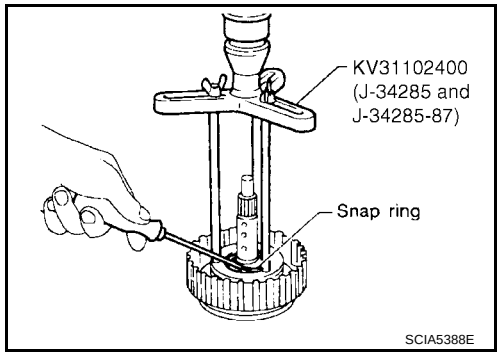

7. Remove input clutch piston from high clutch drum by turning it.

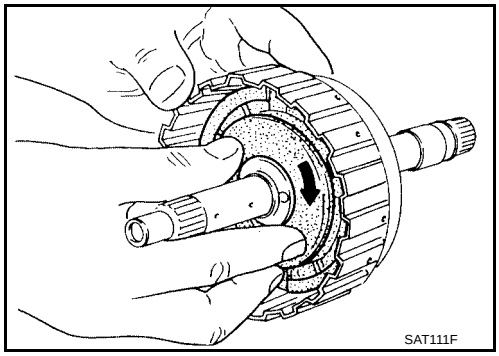

INSPECTION

High Clutch Snap Ring, Spring Retainer and Return Springs

- Check for deformation, fatigue or damage.
  If necessary, replace.
- **When replacing spring retainer and return springs, replace them as a set.**

High Clutch Drive Plates

- Check facing for burns, cracks or damage.
- Measure thickness of facing.

  Thickness of drive plate:

  Standard : 1.5 mm (0.059 in)

  Wear limit : 1.3 mm (0.051 in)

- If not within wear limit, replace.

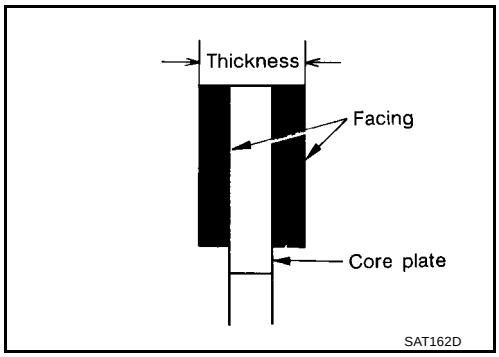

Seal Ring Clearance

- Install new seal rings onto input shaft.
- Measure clearance between seal ring and ring groove.

  Standard clearance : 0.08 - 0.23 mm (0.0031 - 0.0091 in)

  Allowable limit : 0.23 mm (0.0091 in)

- If not within allowable limit, replace input shaft assembly.

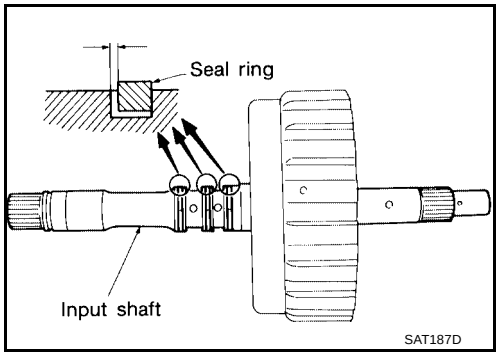

ASSEMBLY

1. Install input clutch piston assembly by turning it slowly.

   CAUTION:
   Apply ATF to inner surface of drum.

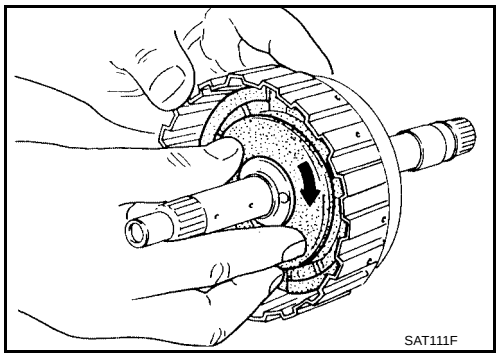

2. Install return springs and cancel force cover on input clutch piston.

3. Set Tool on cancel force cover and install snap ring while slowly compressing return springs.

CAUTION:
- **Set Tool directly over return springs.**
- **Do not expand snap ring excessively.**

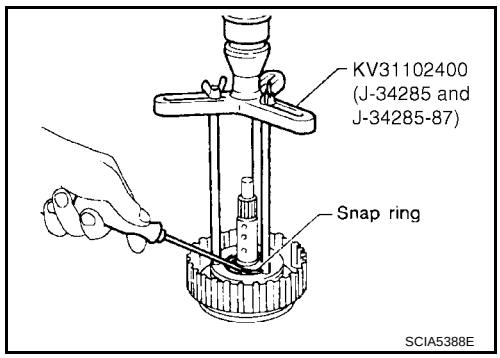

- **Do not align snap ring gap with spring retainer stopper.**

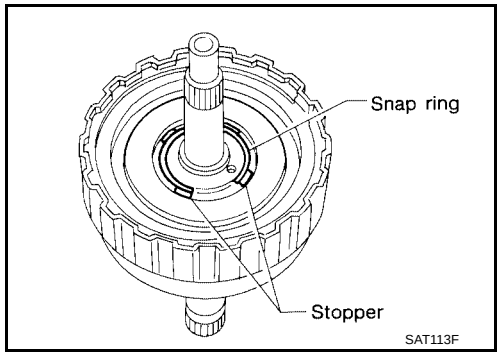

4. Install drive plates, driven plates and retaining plate.

CAUTION:
Take care with the order and direction of plates.

5. Install snap ring.

CAUTION:
Do not expand snap ring excessively.

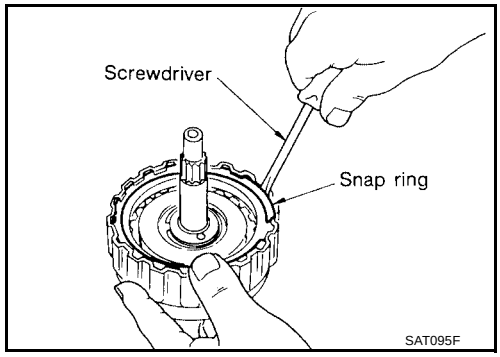

6. Measure clearance between retaining plate and snap ring. If not within allowable limit, select proper retaining plate.

Specified clearance

Standard	**: 1.8 - 2.2 mm (0.071 - 0.087 in)**
Allowable limit	**: 2.8 mm (0.110 in)**

Retaining plate

: Refer to AT-366, "HIGH CLUTCH" .

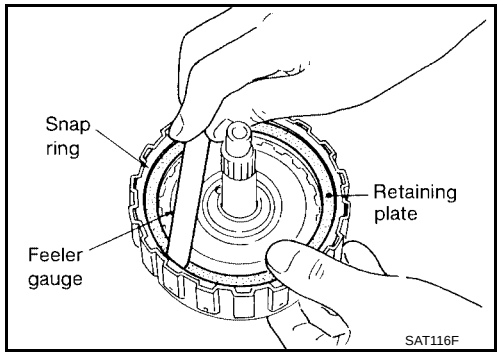

7. Check operation of high clutch.

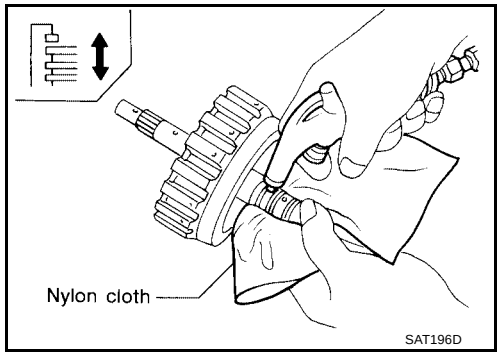

8. Install seal rings to input shaft.

CAUTION:

- **Apply petroleum jelly to seal rings.**
- **Always replace when removed.**

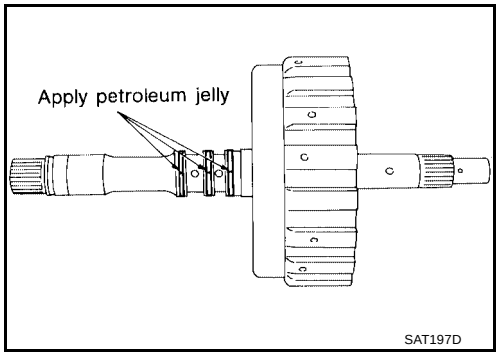

- **Roll paper around seal rings to prevent seal rings from spreading.**

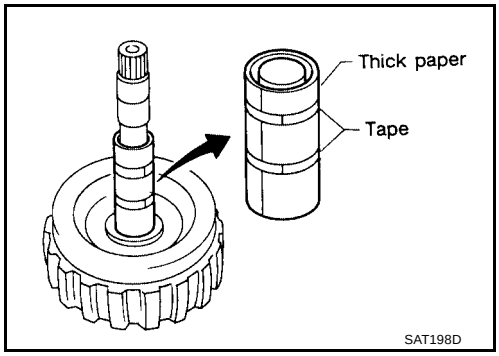

Forward and Overrun Clutches

UCS000RT

COMPONENTS

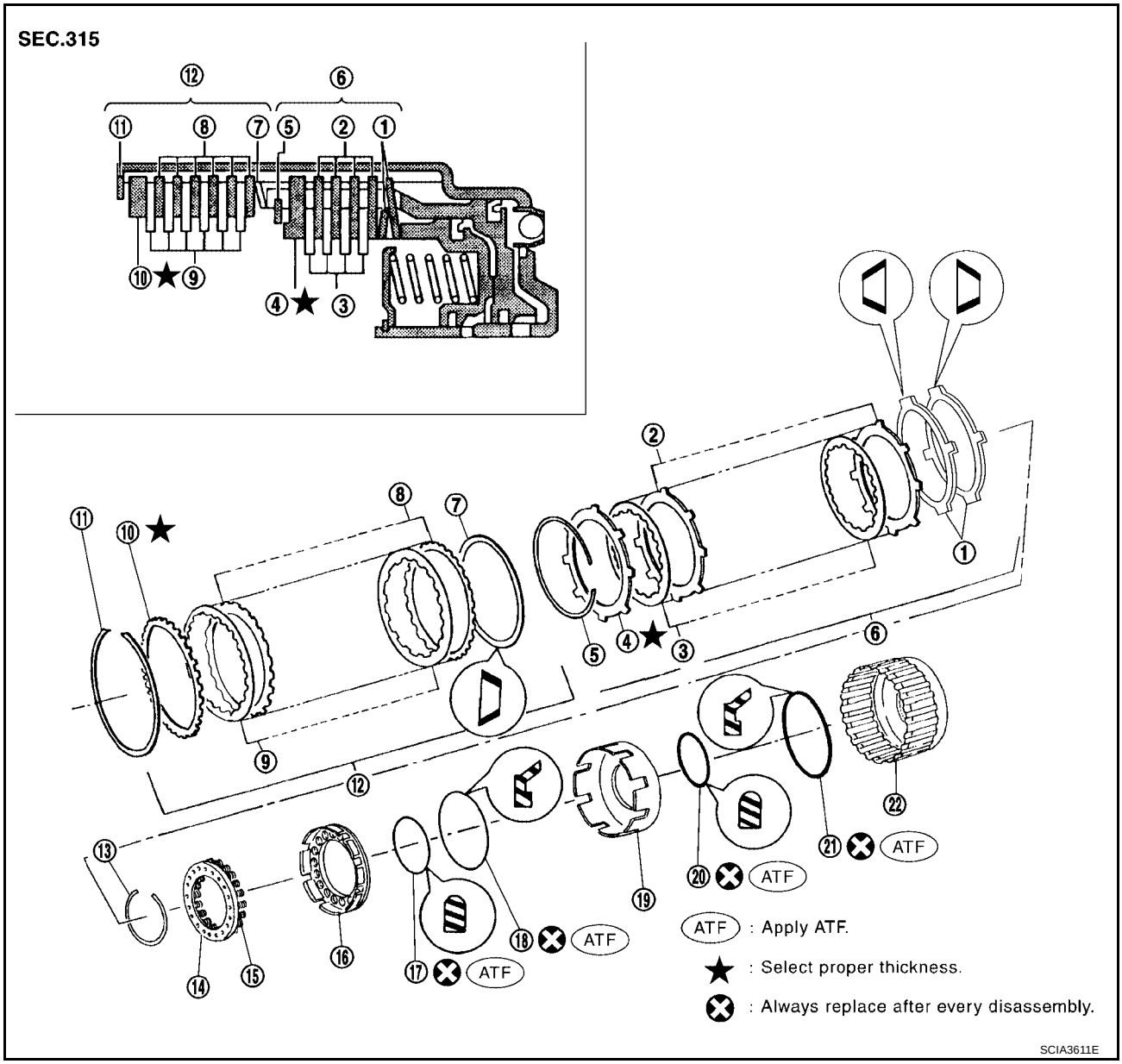

1.	Dish plate	2.	Driven plate	3.	Drive plate
4.	Retaining plate	5.	Snap ring	6.	Overrun clutch
7.	Dish plate	8.	Driven plate	9.	Drive plate
10.	Retaining plate	11.	Snap ring	12.	Forward clutch
13.	Snap ring	14.	Spring retainer	15.	Return spring
16.	Overrun clutch piston	17.	D-ring	18.	Seal ring
19.	Forward clutch piston	20.	D-ring	21.	Seal ring
22.	Forward clutch drum				

DISASSEMBLY

1. Check operation of forward clutch and overrun clutch.
a. Install bearing retainer on forward clutch drum.
b. Apply compressed air to oil hole of forward clutch drum.
c. Check to see that retaining plate moves to snap ring.
d. If retaining plate does not contact snap ring:
   - D-ring might be damaged.
   - Oil seal might be damaged.
   - Fluid might be leaking past piston check ball.

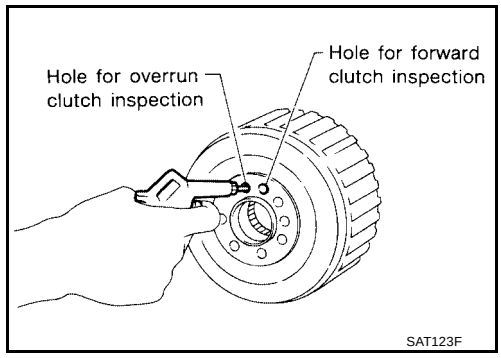

2. Remove snap ring for forward clutch.

   CAUTION:
   Do not expand snap ring excessively.
3. Remove drive plates, driven plates, retaining plate and dish plate for forward clutch.

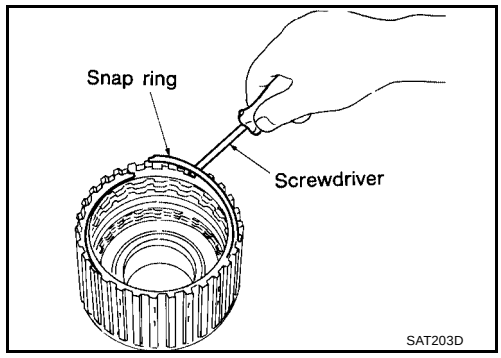

4. Remove snap ring for overrun clutch.

   CAUTION:
   Do not expand snap ring excessively.
5. Remove drive plates, driven plates, retaining plate and dish plate for overrun clutch.

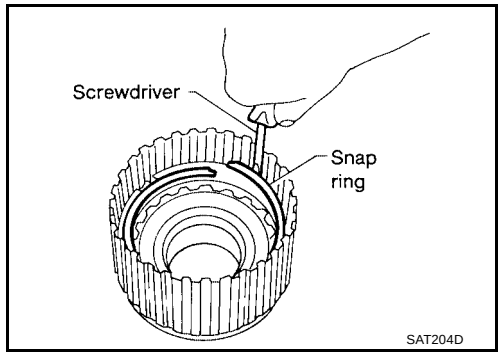

6. Set Tool on spring retainer and remove snap ring from forward clutch drum while compressing return springs.

   CAUTION:
   - **Set Tool directly over return springs.**
   - **Do not expand snap ring excessively.**
7. Remove spring retainer and return springs.

   CAUTION:
   Do not remove return springs from spring retainer.

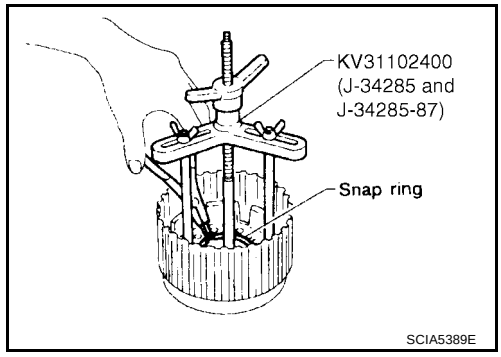

8. Remove forward clutch piston with overrun clutch piston from forward clutch drum by turning it.

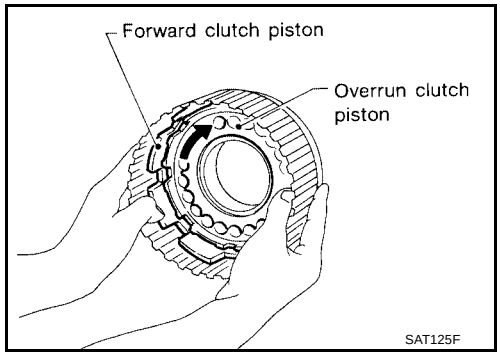

9. Remove overrun clutch piston from forward clutch piston by turning it.

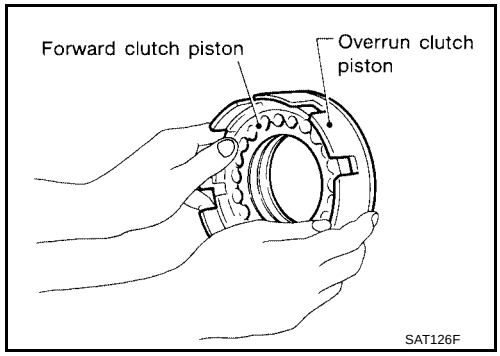

10. Remove D-rings and seal rings from forward clutch piston and overrun clutch piston.

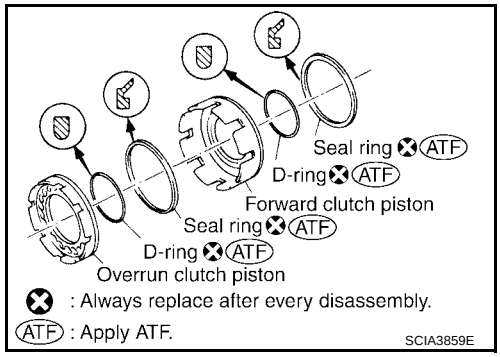

INSPECTION

Snap Rings, Spring Retainer and Return Springs

- Check for deformation, fatigue or damage.
- Replace if necessary.
- **When replacing spring retainer and return springs, replace them as a set.**

Forward Clutch and Overrun Clutch Drive Plates

- Check facing for burns, cracks or damage.
- Measure thickness of facing.

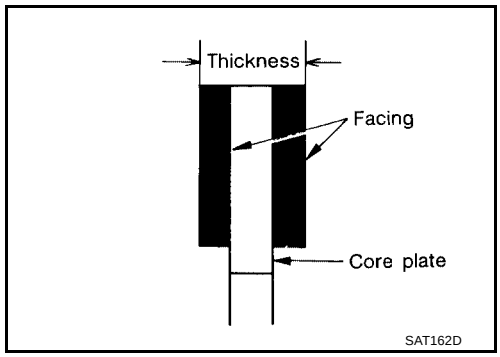

Thickness of drive plate:

Forward clutch

Standard	**: 1.6 mm (0.063 in)**
Wear limit	**: 1.4 mm (0.055 in)**

Overrun clutch

Standard	**: 1.6 mm (0.063 in)**
Wear limit	**: 1.4 mm (0.055 in)**

- If not within wear limit, replace.

Forward Clutch and Overrun Clutch Dish Plates

- Check for deformation or damage.
- Measure thickness of dish plate.

Thickness of dish plate

Forward clutch	**: 2.7 mm (0.106 in)**
Overrun clutch	**: 2.7 mm (0.106 in)**

- If deformed or fatigued, replace.

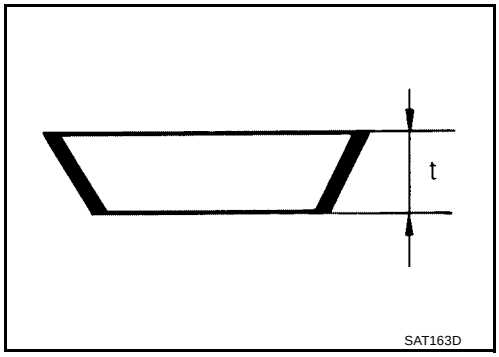

Forward Clutch Drum

- Make sure that check balls are not fixed.
- Apply compressed air to check ball oil hole from outside of forward clutch drum. Make sure air leaks past ball.
- Apply compressed air to oil hole from inside of forward clutch drum. Make sure there is no air leakage.

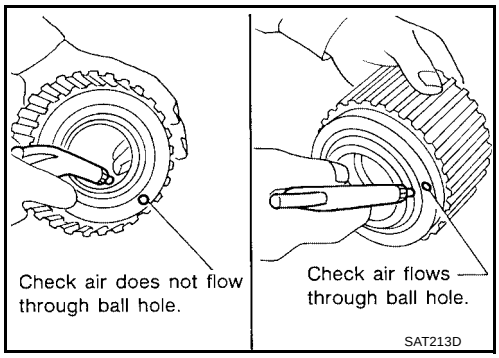

Overrun Clutch Piston

- Make sure that check balls are not fixed.
- Apply compressed air to check ball oil hole opposite the return spring. Make sure there is no air leakage.
- Apply compressed air to oil hole on return spring side. Make sure that air leaks past ball.

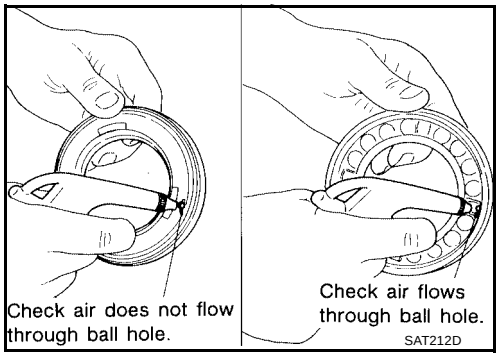

ASSEMBLY

1. Install D-rings and seal rings on forward clutch piston and overrun clutch piston.

   CAUTION:
   - **Do not reuse D-ring and seal ring.**
   - **Take care with direction of seal ring.**
   - **Apply ATF to both parts.**

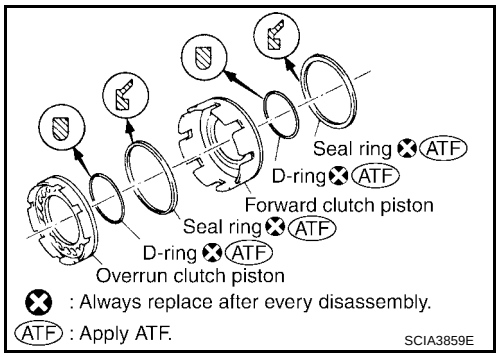

2. Install overrun clutch piston assembly on forward clutch piston by turning it slowly.

CAUTION:
Apply ATF to inner surface of forward clutch piston.

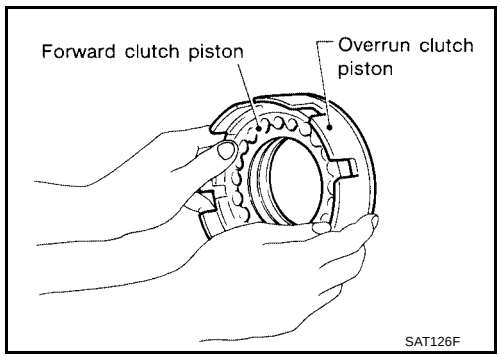

3. Install forward clutch piston assembly on forward clutch drum by turning it slowly.

CAUTION:
Apply ATF to inner surface of drum.

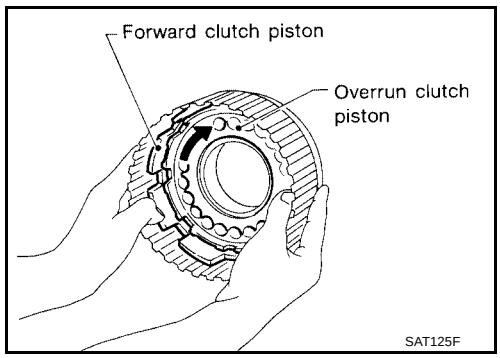

4. Install return spring on overrun clutch piston.

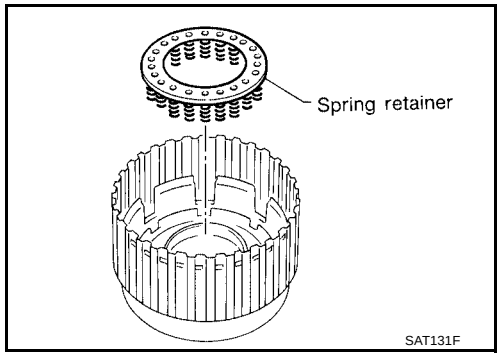

- Align the mark on spring retainer with check ball in overrun clutch piston.

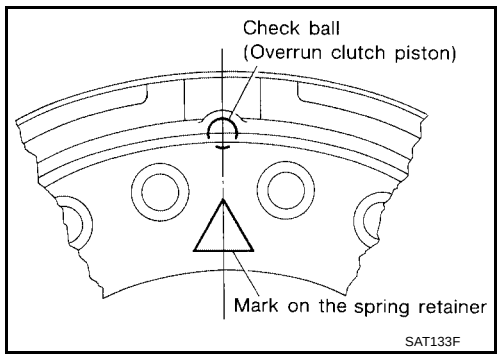

5. Set Tool on spring retainer and install snap ring while compressing return springs.

CAUTION:
- **Set Tool directly over return springs.**
- **Do not expand snap ring excessively.**

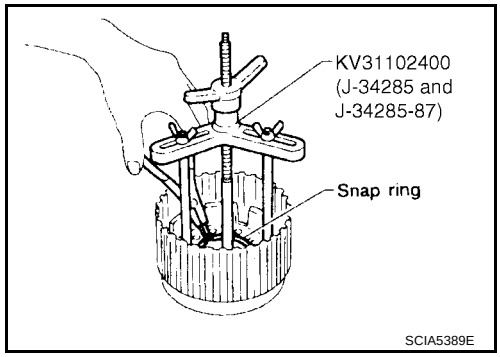

- **Do not align snap ring gap with spring retainer stopper.**

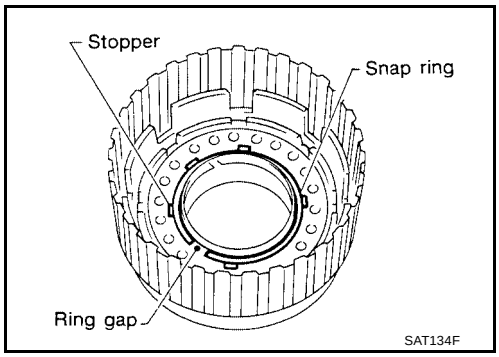

6. Install drive plates, driven plates, retaining plate and dish plate for overrun clutch.

   CAUTION:
   Take care with order of plates.

7. Install snap ring for overrun clutch.

   CAUTION:
   Do not expand snap ring excessively.

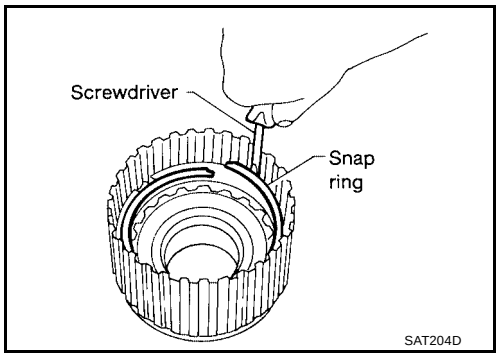

8. Measure clearance between overrun clutch retaining plate and snap ring.
   If not within allowable limit, select proper retaining plate.

Specified clearance	
Standard	**: 0.7 - 1.1 mm (0.028 - 0.043 in)**
Allowable limit	**: 1.7 mm (0.067 in)**
Overrun clutch retaining plate	**Refer to AT-367, "OVERRUN CLUTCH" .**

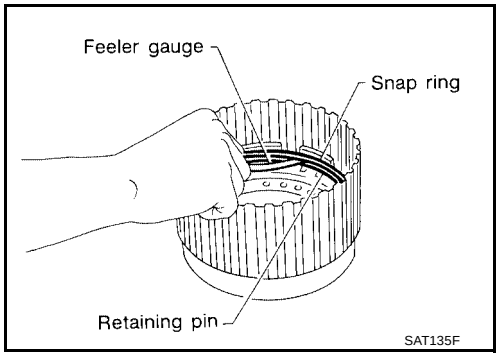

9. Install drive plates, driven plates, retaining plate and dish plate for forward clutch.

   CAUTION:
   Take care with order of plates.

10. Install snap ring for forward clutch.

    CAUTION:
    Do not expand snap ring excessively.

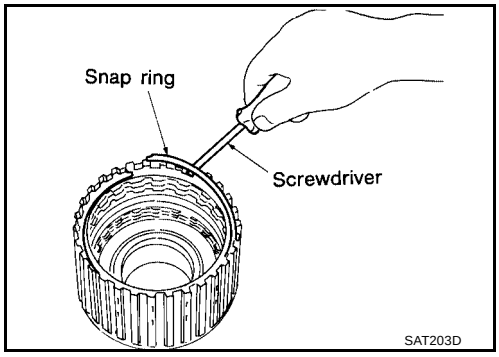

11. Measure clearance between forward clutch retaining plate and snap ring.
    If not within allowable limit, select proper retaining plate.

Specified clearance	
Standard	**: 0.45 - 0.85 mm (0.0177 - 0.0335 in)**
Allowable limit	**: 1.85 mm (0.0728 in)**
Forward clutch retaining plate	**: Refer to AT-367, "FORWARD CLUTCH" .**

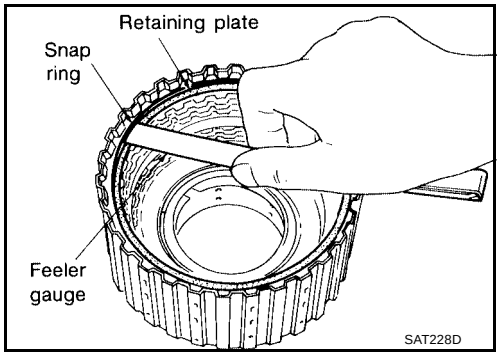

12. Check operation of forward clutch.
13. Check operation of overrun clutch.

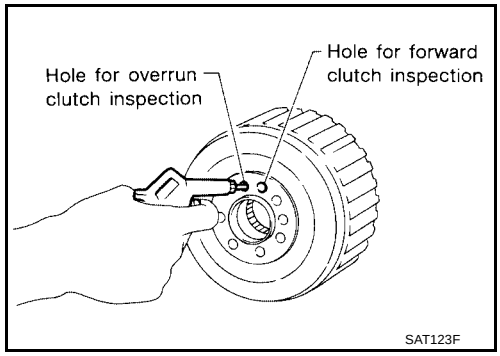

Low & Reverse Brake

UCS000RU

COMPONENTS

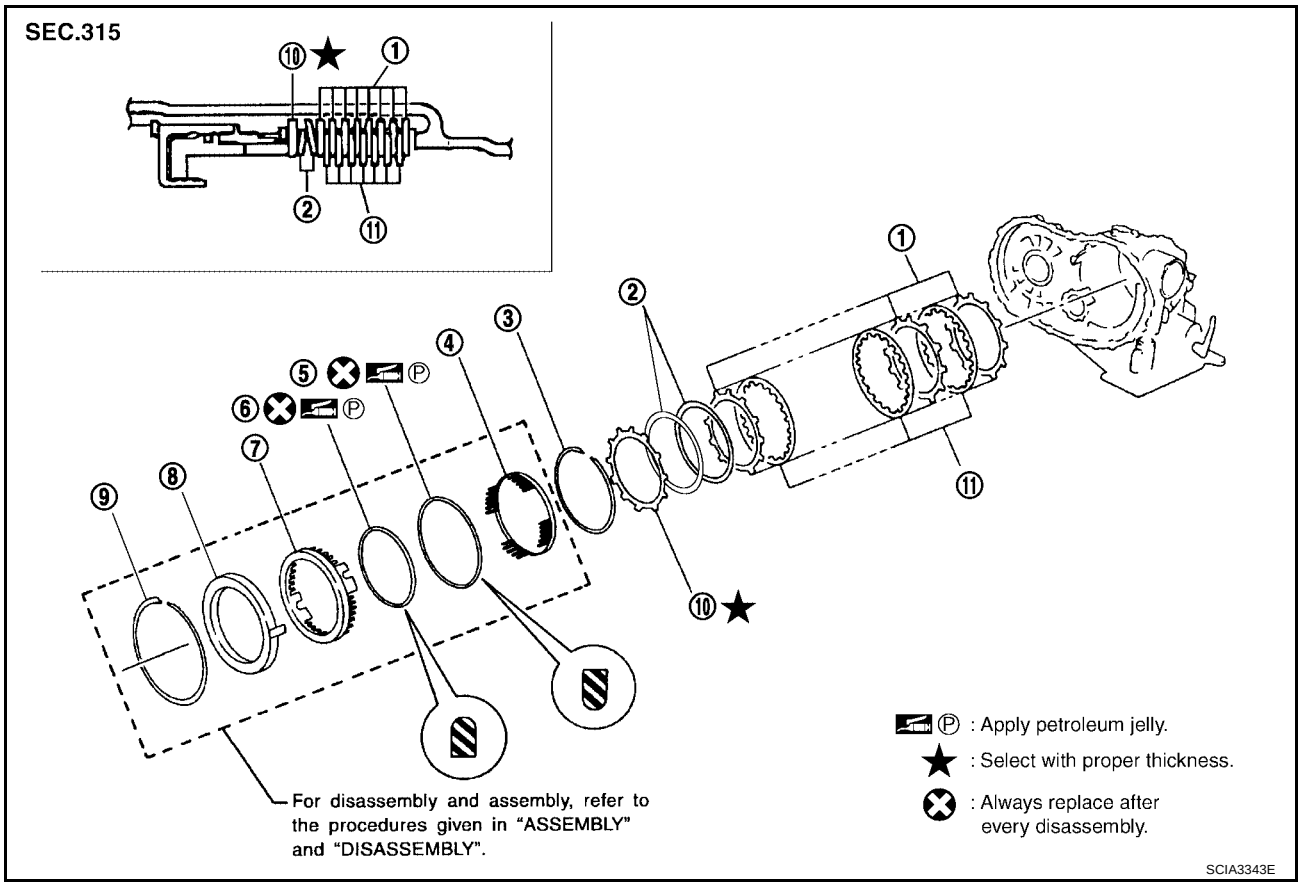

1.	Driven plate	2.	Dish plate	3.	Snap ring
4.	Spring retainer	5.	D-ring	6.	D-ring
7.	Low & reverse brake piston	8.	Retainer	9.	Snap ring
10.	Retaining plate	11.	Drive plate		

DISASSEMBLY

1. Check operation of low & reverse brake.

a. Apply compressed air to oil hole of transaxle case.
b. Check to see that retaining plate moves to snap ring.
c. If retaining plate does not contact snap ring:

CAUTION:
- **D-ring might be damaged.**
- **Fluid might be leaking past piston check ball.**
- **Do not expand snap ring excessively.**

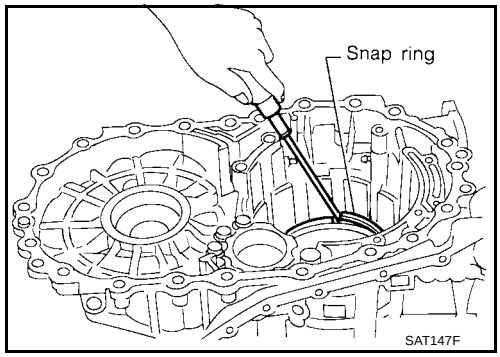

2. In order to remove piston, apply compressed air to oil hole of retainer while holding piston.

   CAUTION:
   Apply air gradually and allow piston to come out evenly.

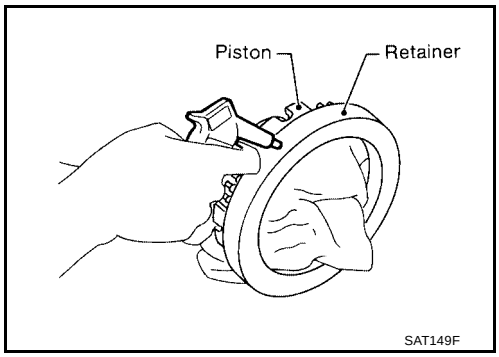

3. Remove D-rings from piston.

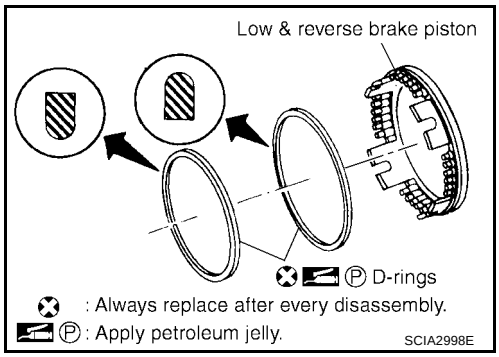

INSPECTION

Low & Reverse Brake Snap Ring, Spring Retainer and Return Springs

- Check for deformation, fatigue or damage.
  If necessary, replace.
- **When replacing spring retainer and return springs, replace them as a set.**

Low & Reverse Brake Drive Plate

- Check facing for burns, cracks or damage.
- Measure thickness of facing.

Thickness of drive plate	
Standard	**: 1.8 mm (0.071 in)**
Wear limit	**: 1.6 mm (0.063 in)**

- If not within wear limit, replace.

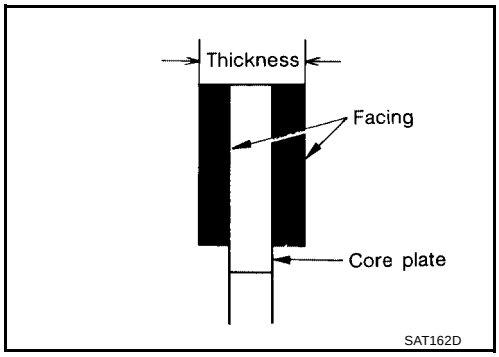

ASSEMBLY

1. Install D-rings on piston.

   CAUTION:
   - **Do not reuse D-ring.**
   - **Apply ATF to both parts.**

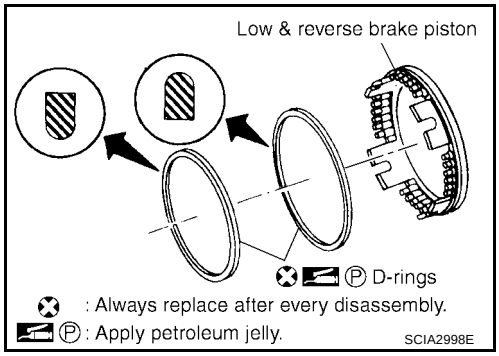

2. Set and align piston with retainer.

CAUTION:
This operation is required in order to engage the protrusions of piston to return springs correctly.
Further procedures are given in "ASSEMBLY".

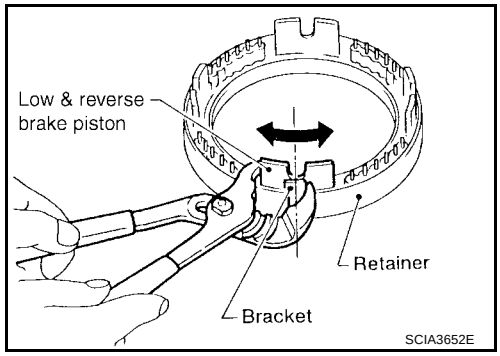

3. Install driven plates, drive plates, retaining plate and dish plate on transaxle case.

CAUTION:
Take care with order of plates and direction of dish plate.

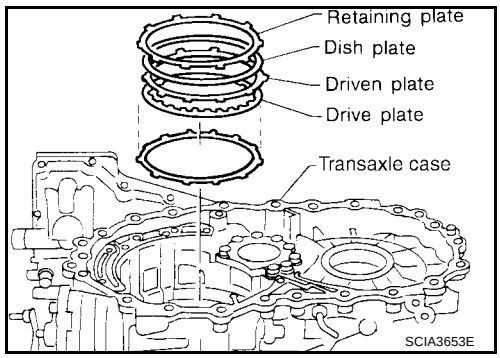

4. Install snap ring.

CAUTION:
Do not expand snap ring excessively

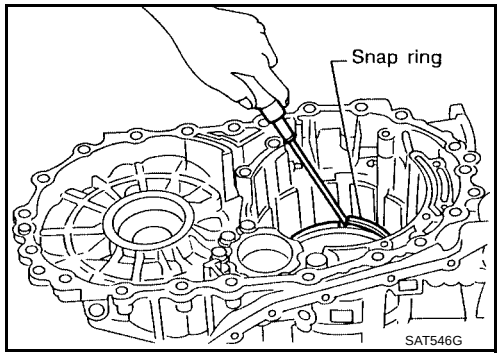

5. Measure clearance between driven plate and transaxle case. If not within allowable limit, select proper retaining plate. (front side)

Specified clearance	
Standard	**: 1.7 - 2.1 mm (0.067 - 0.083 in)**
Allowable limit	**: 3.3 mm (0.130 in)**
Retaining plate	**Refer to AT-367, "LOW & REVERSE BRAKE" .**

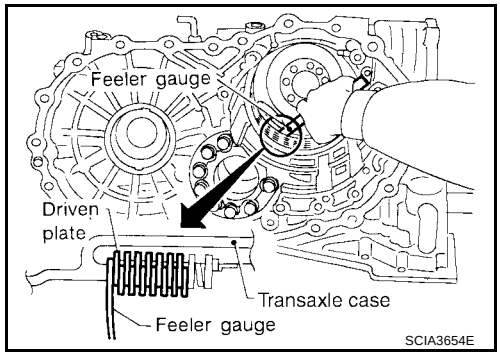

Rear Internal Gear, Forward Clutch Hub and Overrun Clutch Hub

UCS000RV

COMPONENTS

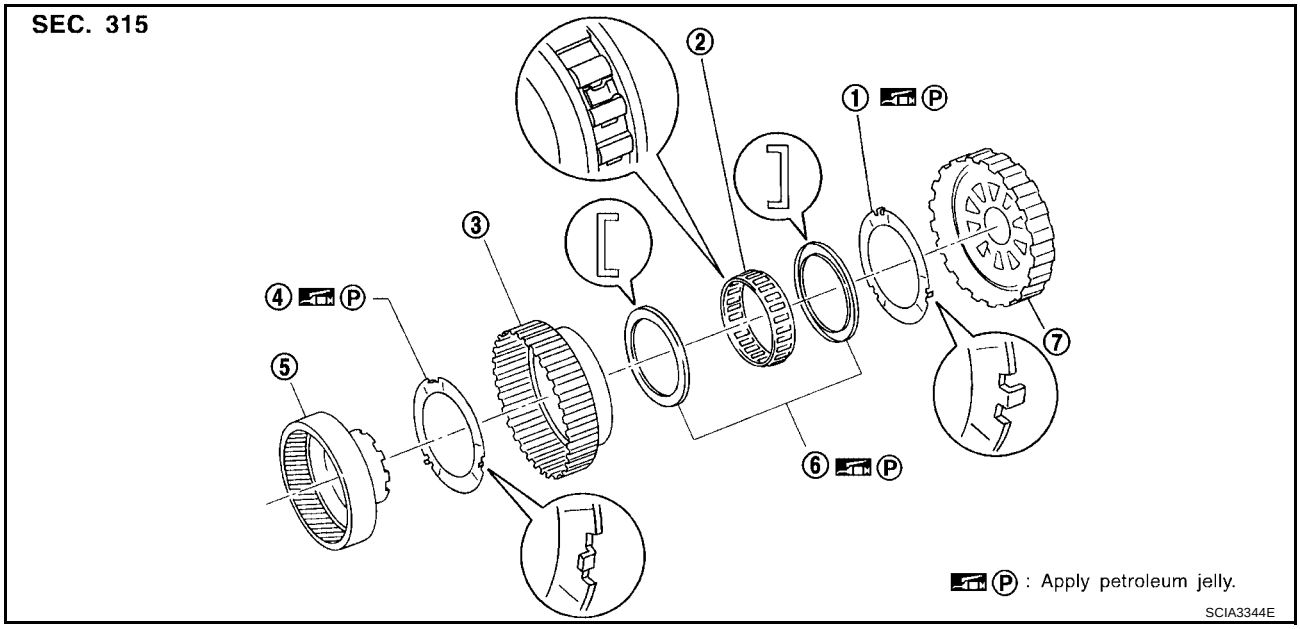

1. Thrust washer
2. Forward one-way clutch
3. Forward clutch hub
4. Thrust washer
5. Rear internal gear
6. Bearing
7. Overrun clutch hub

DISASSEMBLY

1. Remove overrun clutch hub and thrust washer from forward clutch hub.

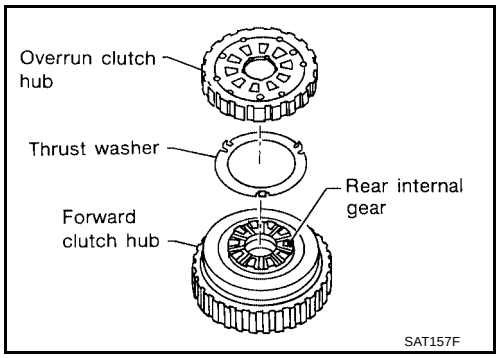

2. Remove forward clutch hub from rear internal gear.

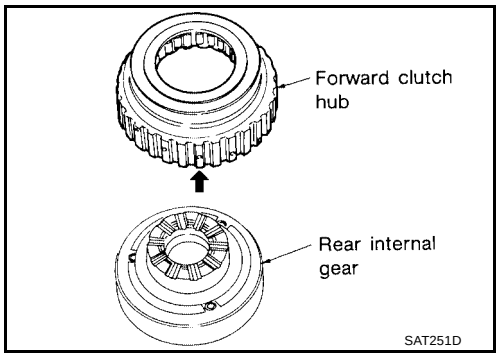

3. Remove bearing from rear internal gear.

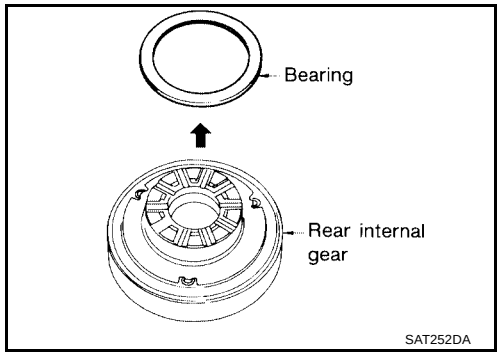

4. Remove thrust washer from rear internal gear.

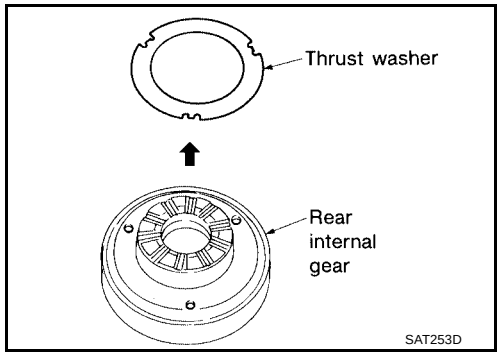

5. Remove bearing from forward one-way clutch.

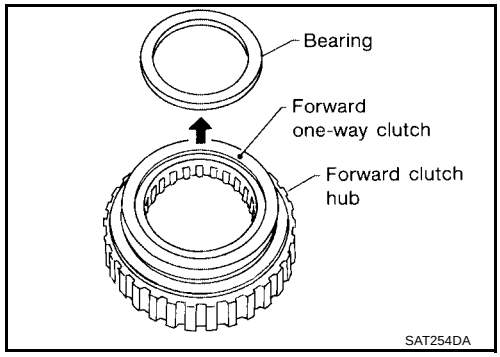

6. Remove forward one-way clutch from forward clutch hub.

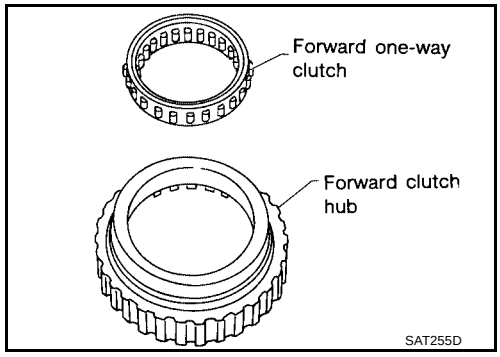

INSPECTION

Rear Internal Gear, Forward Clutch Hub and Overrun Clutch Hub

- Check rubbing surfaces for wear or damage.

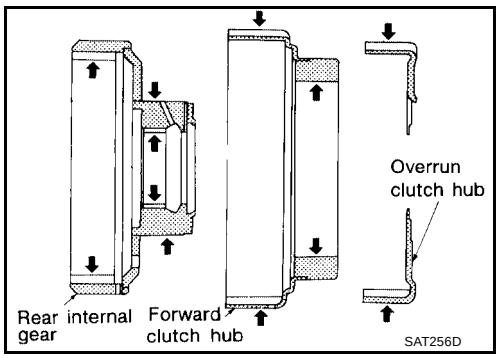

Bearings and Forward One-Way Clutch

- Check bearings for deformation and damage.
- Check forward one-way clutch for wear and damage.

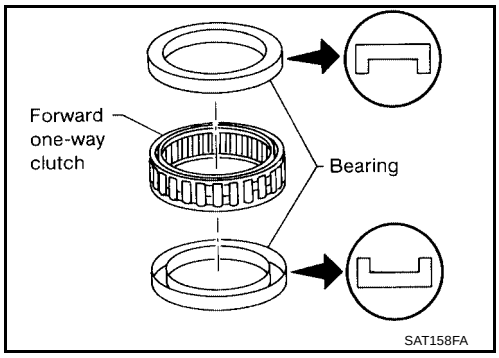

ASSEMBLY

1. Install forward one-way clutch on forward clutch.

   CAUTION:
   Take care with the direction of forward one-way clutch.

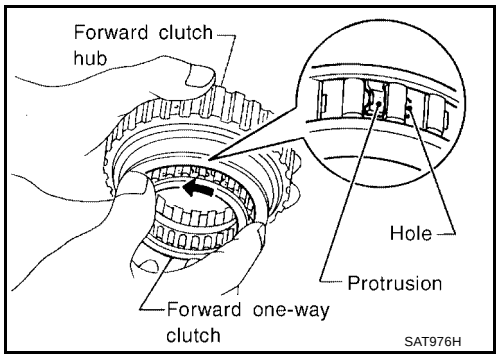

2. Install bearing on forward one-way clutch.

   CAUTION:
   Apply petroleum jelly to bearing.

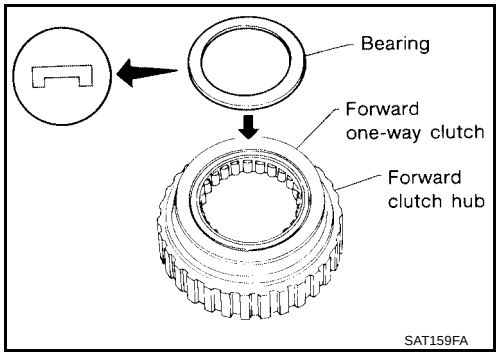

3. Install thrust washer on rear internal gear.

CAUTION:
- **Apply petroleum jelly to thrust washer.**
- **Align hooks of thrust washer with holes of rear internal gear.**

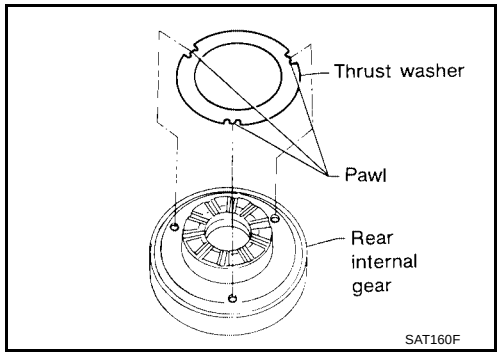

4. Install bearing on rear internal gear.

CAUTION:
Apply petroleum jelly to bearing.

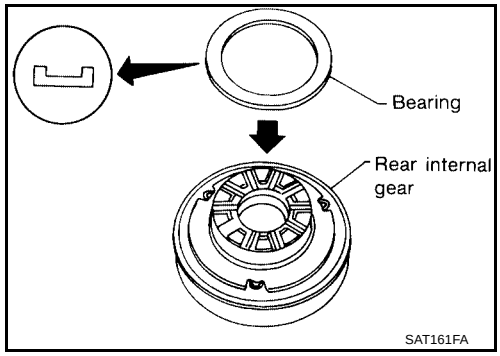

5. Install forward clutch hub on rear internal gear.

CAUTION:
- **Check operation of forward one-way clutch.**
  Hold rear internal gear and turn forward clutch hub.
  Check forward clutch hub for correct locking and unlocking directions.
- **If not as shown in figure, check installation direction of forward one-way clutch.**

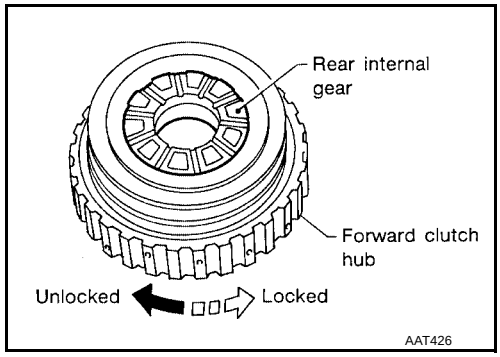

6. Install thrust washer and overrun clutch hub.

CAUTION:
- **Apply petroleum jelly to thrust washer.**
- **Align hooks of thrust washer with holes of overrun clutch hub.**
- **Align projections of rear internal gear with holes of overrun clutch hub.**

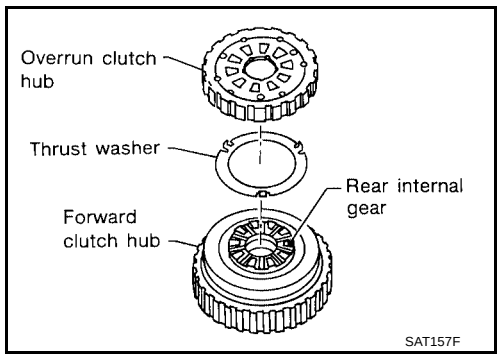

Output Shaft, Idler Gear, Reduction Pinion Gear and Bearing Retainer

UCS000RW

COMPONENTS

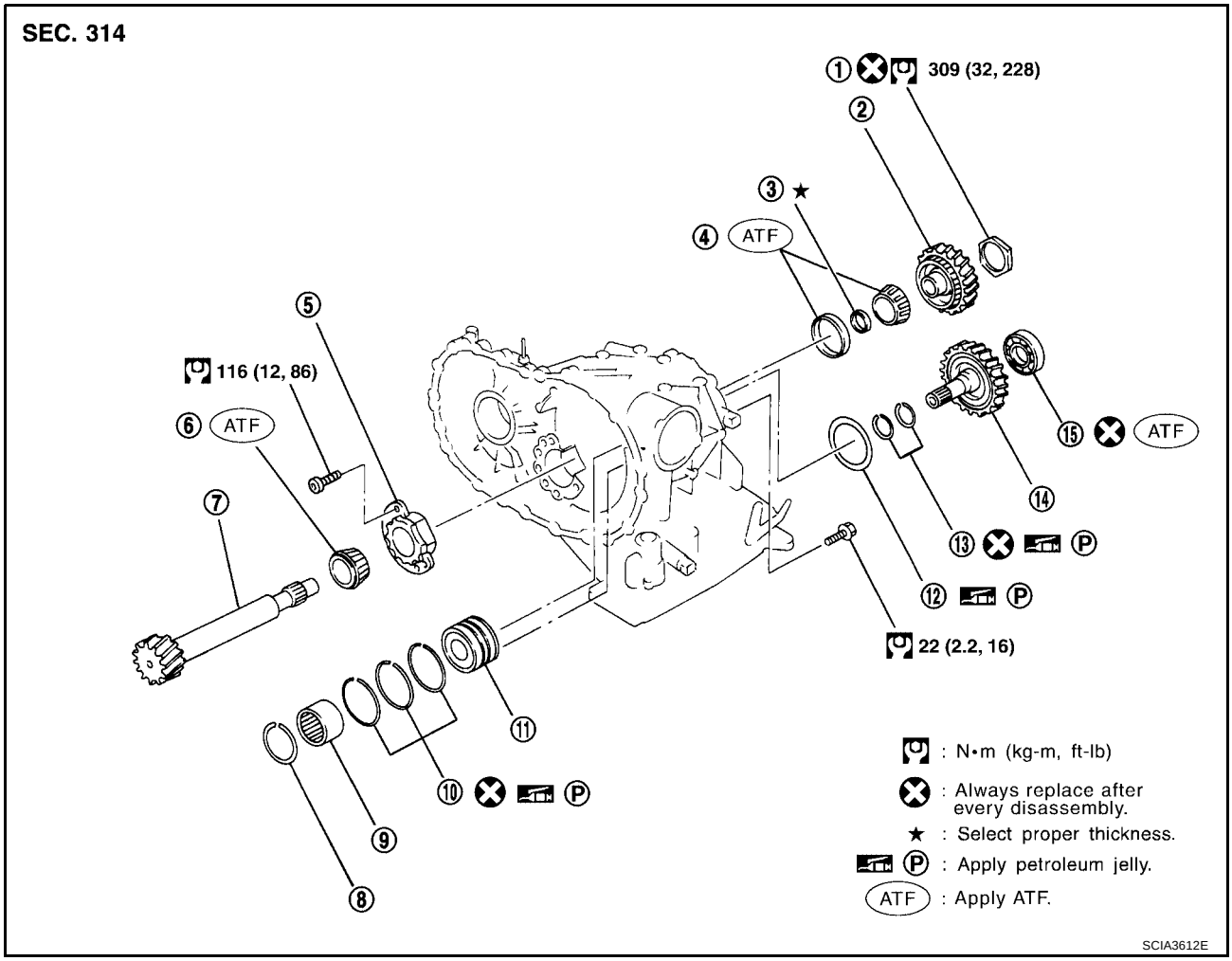

1.	Lock nut	2.	Idler gear	3.	Adjusting shim
4.	Idler gear bearing	5.	Reduction pinion gear bearing outer race	6.	Reduction pinion gear bearing inner race
7.	Reduction pinion gear	8.	Snap ring	9.	Radial needle bearing
10.	Seal ring	11.	Bearing retainer	12.	Needle bearing
13.	Seal ring	14.	Out put shaft	15.	Out put shaft bearing

DISASSEMBLY

1. Remove seal rings from output shaft and bearing retainer.

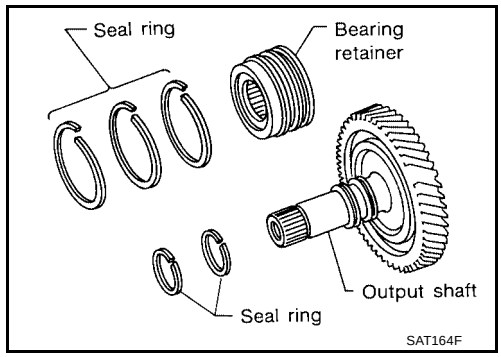

2. Remove output shaft bearing with screwdrivers.

CAUTION:
- **Always replace bearing with a new one when removed.**
- **Do not damage output shaft.**

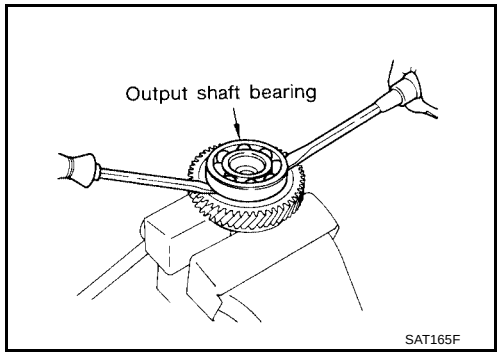

3. Remove snap ring from bearing retainer.

CAUTION:
Do not expand snap ring excessively.

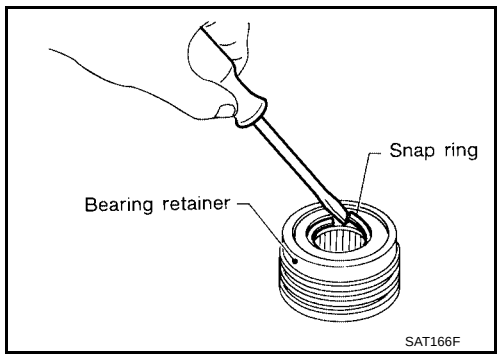

4. Remove needle bearing from bearing retainer.

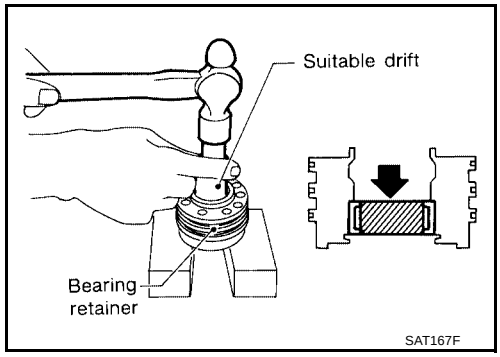

5. Remove idler gear bearing inner race from idler gear.

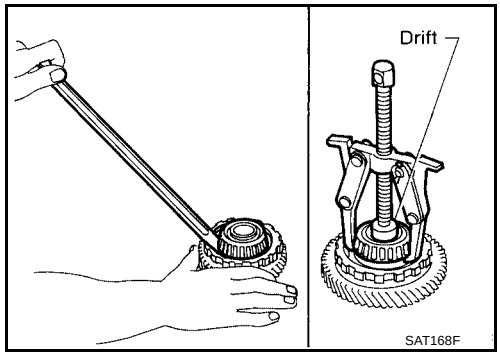

6. Remove idler gear bearing outer race from transaxle case.

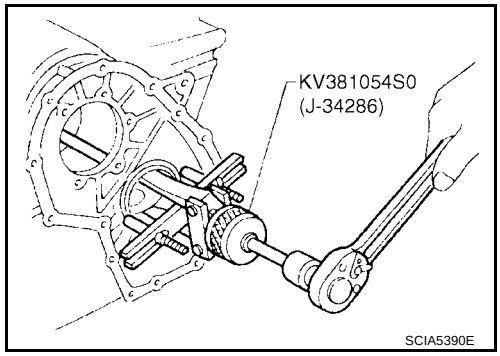

7. Press out reduction pinion gear bearing inner race from reduction pinion gear.

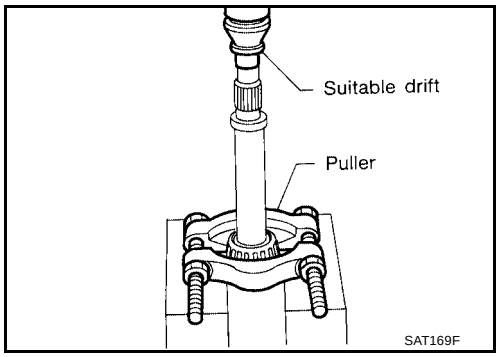

8. Remove reduction pinion gear bearing outer race from transaxle case.

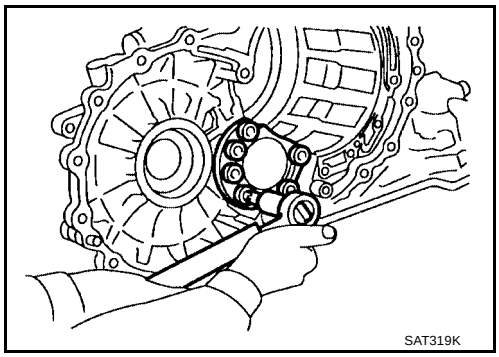

INSPECTION

Output Shaft, Idler Gear and Reduction Pinion Gear

- Check shafts for cracks, wear or bending.
- Check gears for wear, chips and cracks.

Bearing

- Make sure bearings roll freely and are free from noise, cracks, pitting or wear.
- **When replacing taper roller bearing, replace outer and inner race as a set.**

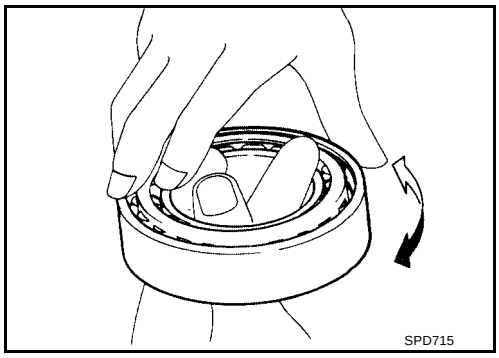

Seal Ring Clearance

- Install new seal rings to output shaft.
- Measure clearance between seal ring and ring groove of output shaft.

Standard clearance	**: 0.10 - 0.25 mm (0.0039 - 0.0098 in)**
Allowable limit	**: 0.25 mm (0.0098 in)**

- If not within allowable limit, replace output shaft.
- Install new seal rings to bearing retainer.
- Measure clearance between seal ring and ring groove of bearing retainer.

Standard clearance	**: 0.10 - 0.30 mm (0.0039 - 0.0118 in)**
Allowable limit	**: 0.30 mm (0.0118 in)**

- If not within allowable limit, replace bearing retainer.

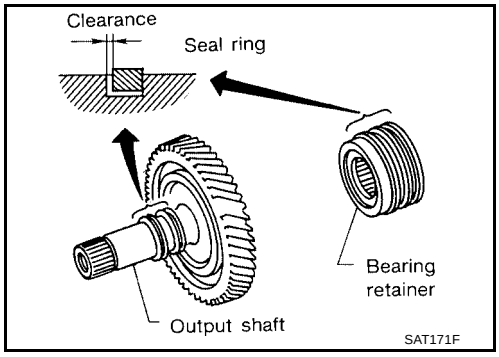

ASSEMBLY

1. Press reduction pinion gear bearing inner race on reduction pinion gear.

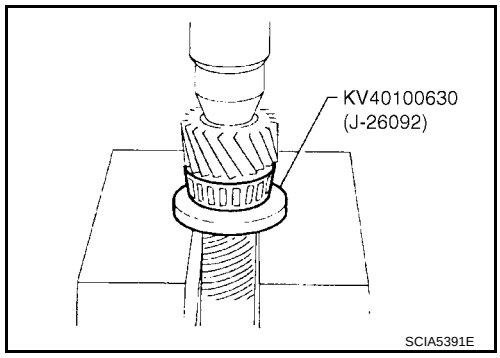

2. Install reduction pinion gear bearing outer race on transaxle case.

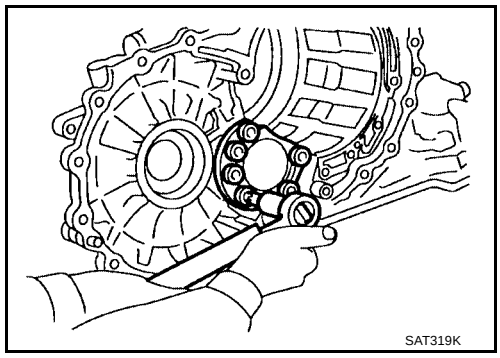

3. Press idler gear bearing inner race on idler gear.

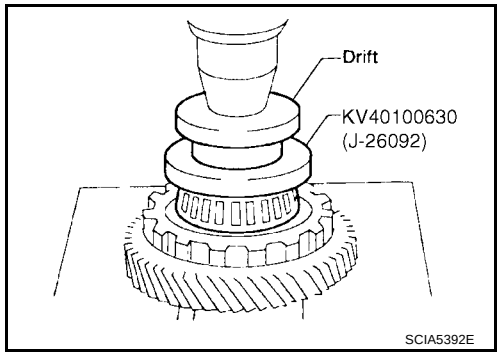

4. Install idler gear bearing outer race on transaxle case.

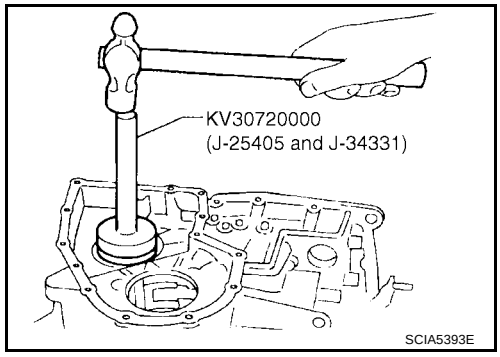

5. Press output shaft bearing on output shaft.

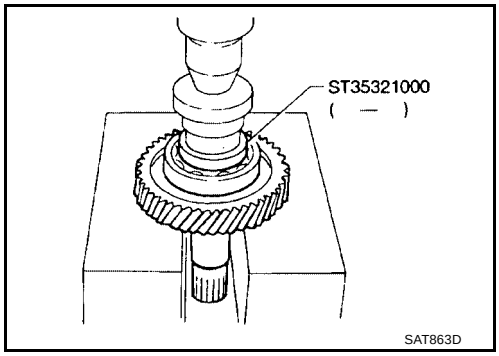

6. Press needle bearing on bearing retainer.

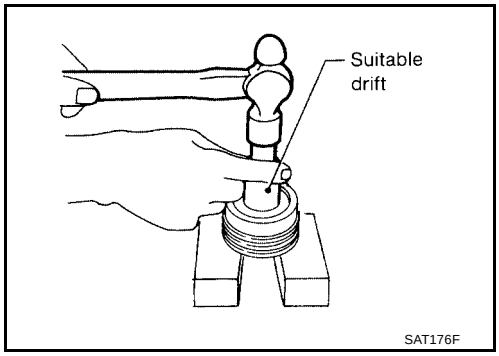

7. Install snap ring to bearing retainer.

CAUTION:
Do not expand snap ring excessively.

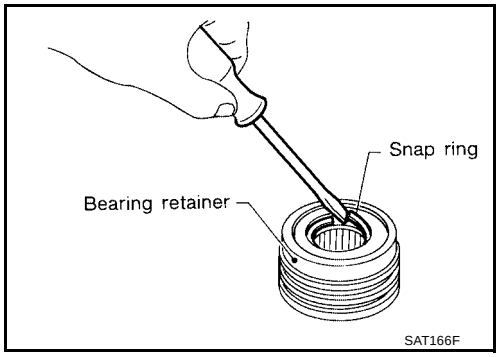

8. After packing ring grooves with petroleum jelly, carefully install new seal rings on output shaft and bearing retainer.

CAUTION:
- **Apply petroleum jelly.**

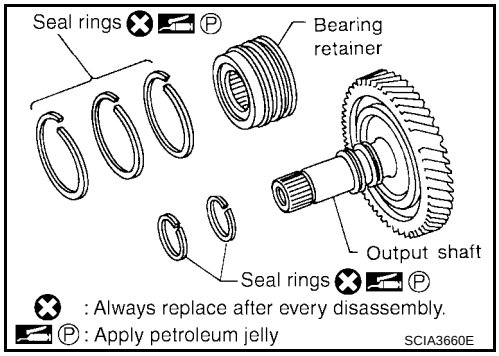

- **Roll paper around seal rings to prevent seal rings from spreading.**

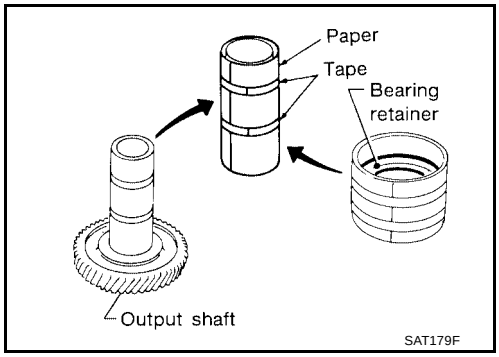

Band Servo Piston Assembly

UCS000RX

COMPONENTS

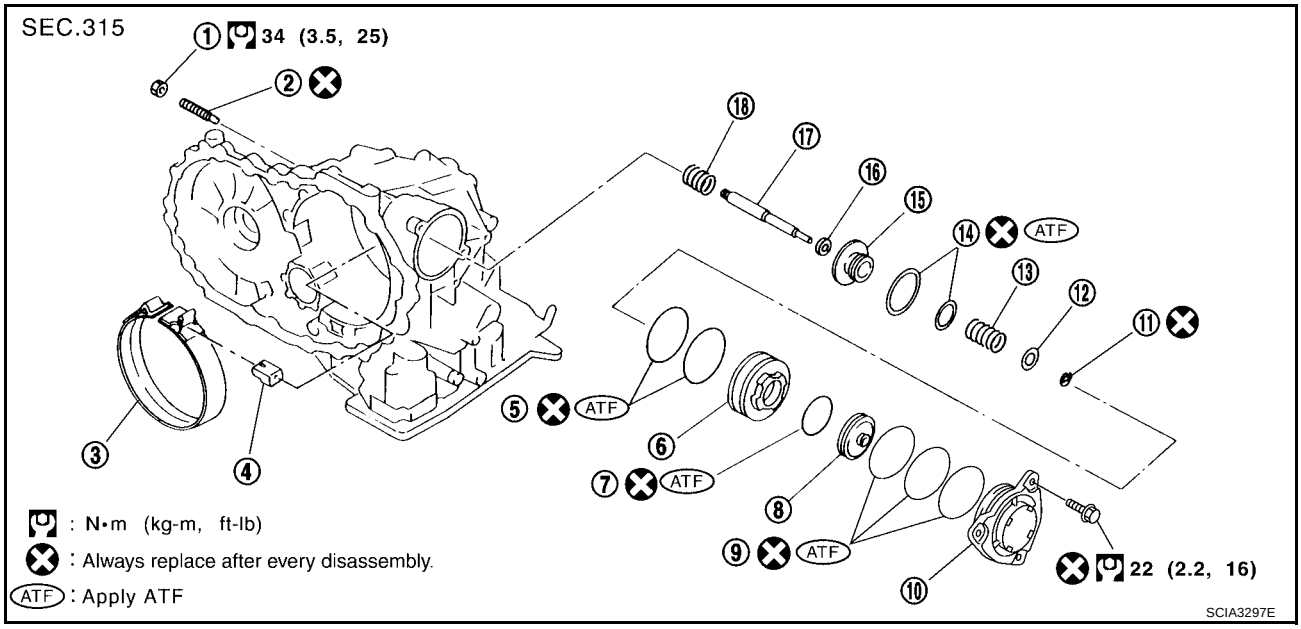

1.	Lock nut	2.	Anchor end pin	3.	Brake band
4.	Strut	5.	O-ring	6.	Servo piston retainer
7.	D-ring	8.	O/D servo piston	9.	O-rings
10.	O/D servo piston retainer	11.	E-ring	12.	Spring retainer
13.	O/D servo return spring	14.	D-ring	15.	Band servo piston
16.	Band servo thrust washer	17.	Band servo piston stem	18.	2nd servo return spring

DISASSEMBLY

1. Remove O/D servo piston retainer fixing bolts.

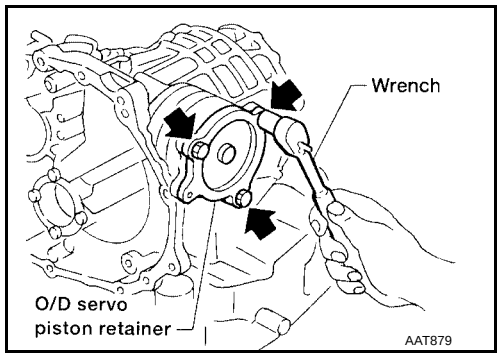

2. Apply compressed air to oil hole in transaxle case to remove O/D servo piston retainer and band servo piston assembly.

   CAUTION:
   Hold band servo piston assembly with a rag or nylon waste.

3. Remove 2nd servo return spring from transaxle case.

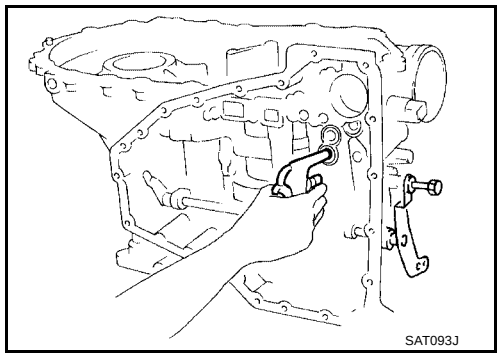

4. Apply compressed air to oil hole in O/D servo piston retainer to remove O/D servo piston from retainer.

   CAUTION:
   Hold O/D band servo piston while applying compressed air.

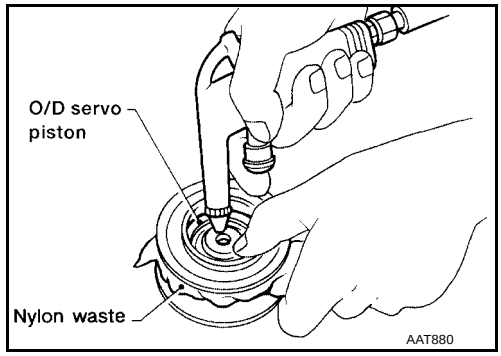

5. Remove D-ring from O/D servo piston.

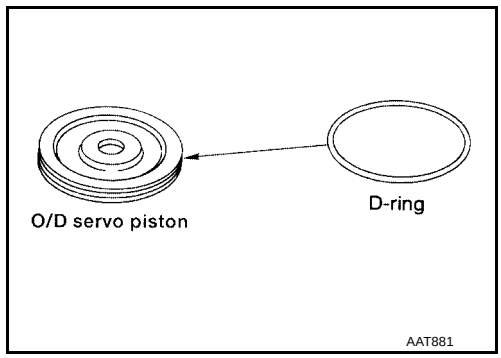

6. Remove O-rings from O/D servo piston retainer.

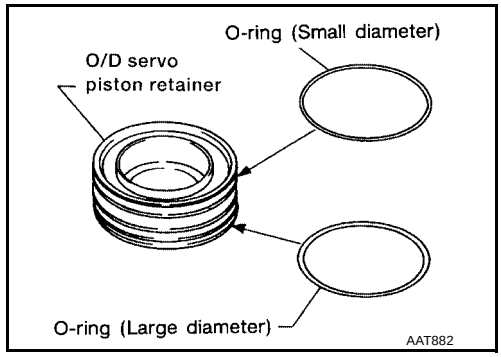

7. Remove band servo piston assembly from servo piston retainer by pushing it forward.

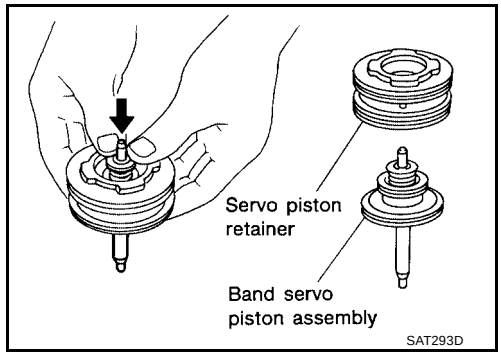

8. Place band servo piston stem end on a wooden block. While pushing spring retainer down, remove E-ring.

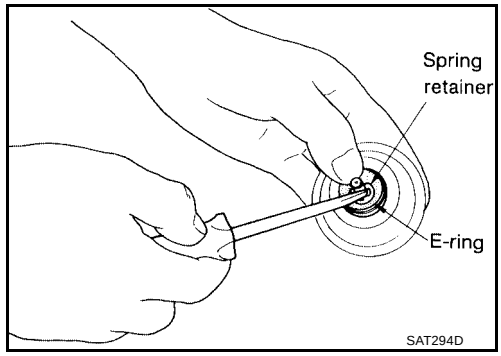

9. Remove spring retainer, O/D servo return spring, band servo thrust washer and band servo piston stem from band servo piston.

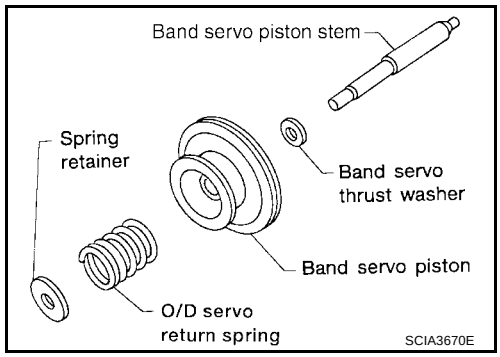

10. Remove O-rings from servo piston retainer.

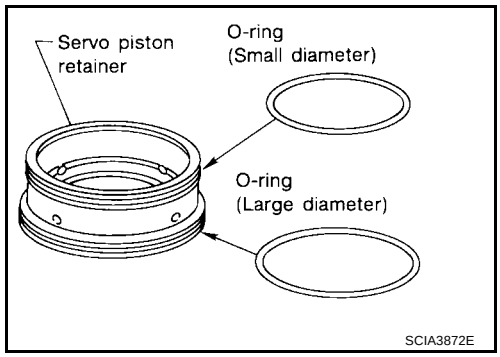

11. Remove D-rings from band servo piston.

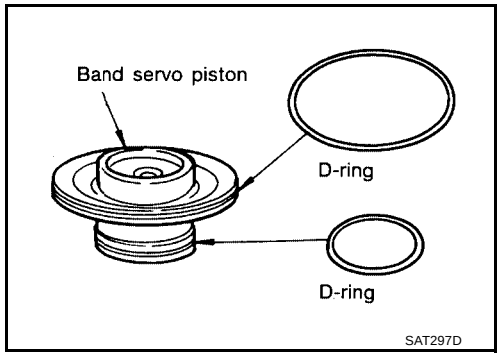

INSPECTION

Pistons, Retainers and Piston Stem

- Check frictional surfaces for abnormal wear or damage.

Return Springs

- Check for deformation or damage.
- Measure free length and outer diameter.

Inspection standard : Refer to AT-370, "Band Servo".

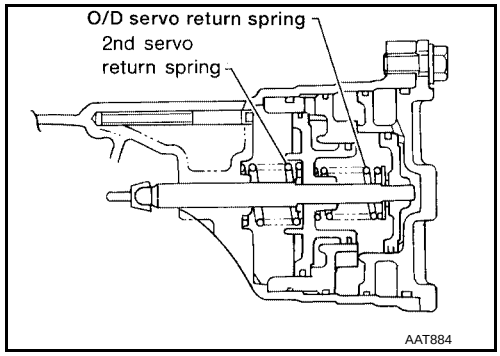

ASSEMBLY

1. Install D-rings to servo piston retainer.

   CAUTION:
   - **Do not reuse D-rings.**
   - **Apply ATF to D-rings.**
   - **Pay attention to position of each D-ring.**

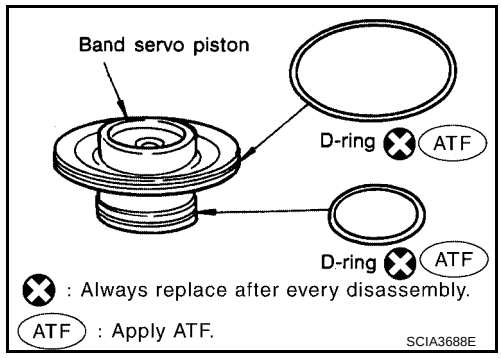

2. Install band servo piston stem, band servo thrust washer, O/D servo return spring and spring retainer to band servo piston.

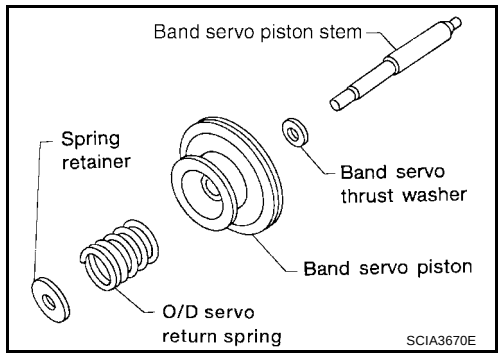

3. Place band servo piston stem end on a wooden block. While pushing spring retainer down, install E-ring.

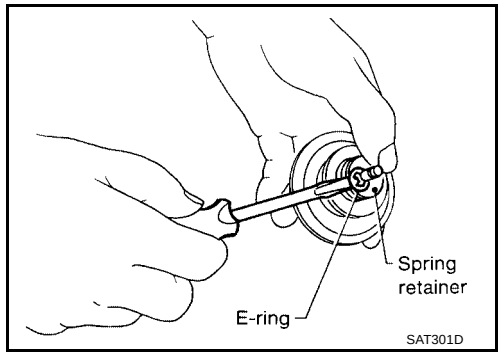

4. Install O-rings to O/D servo piston retainer.

   CAUTION:
   - **Do not reuse O-rings.**
   - **Apply ATF to O-rings.**
   - **Pay attention to position of each O-ring.**

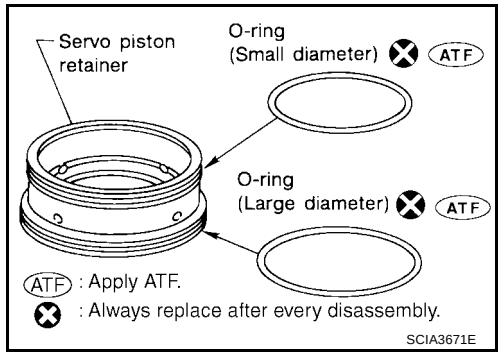

5. Install band servo piston assembly to servo piston retainer by pushing it inward.

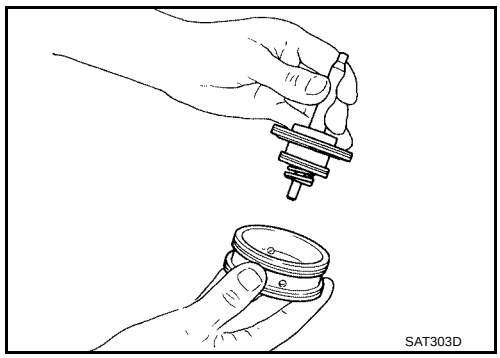

6. Install D-ring to O/D servo piston.

CAUTION:
- **Do not reuse D-ring.**
- **Apply ATF to D-ring.**

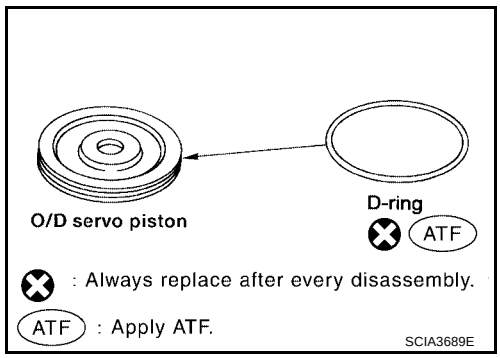

7. Install O-rings to O/D servo piston retainer.

CAUTION:
- **Do not reuse O-rings.**
- **Apply ATF to O-rings.**
- **Pay attention to position of each O-ring.**

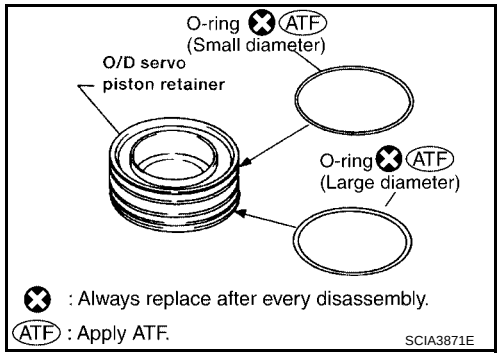

8. Install O/D servo piston to O/D servo piston retainer.

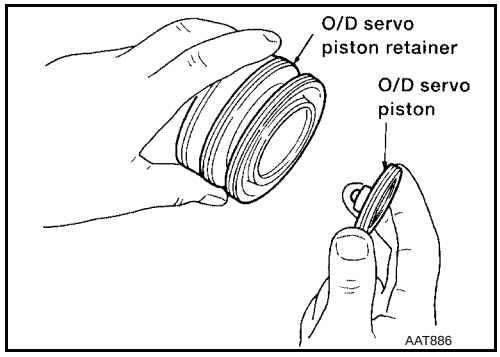

9. Install band servo piston assembly and 2nd servo return spring to transaxle case.

CAUTION:
Apply ATF to O-ring of band servo piston assembly and transaxle case.

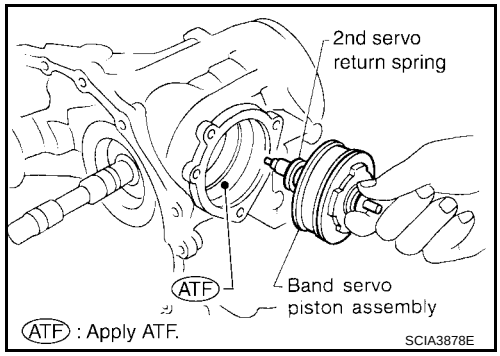

10. Install O/D servo piston assembly to transaxle case.

    CAUTION:
    Apply ATF to O-ring of O/D servo piston assembly and transaxle case.

11. Install O-ring to O/D servo piston retainer.

    CAUTION:
    - **Do not reuse O-ring.**
    - **Apply ATF to O-ring.**

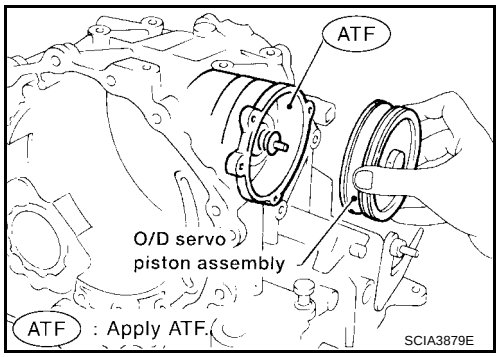

12. Install O/D servo piston retainer to transaxle case.
    Refer to AT-331, "COMPONENTS" .

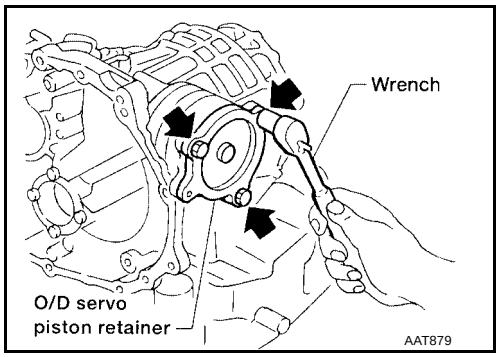

Final Drive

UCS000RY

COMPONENTS

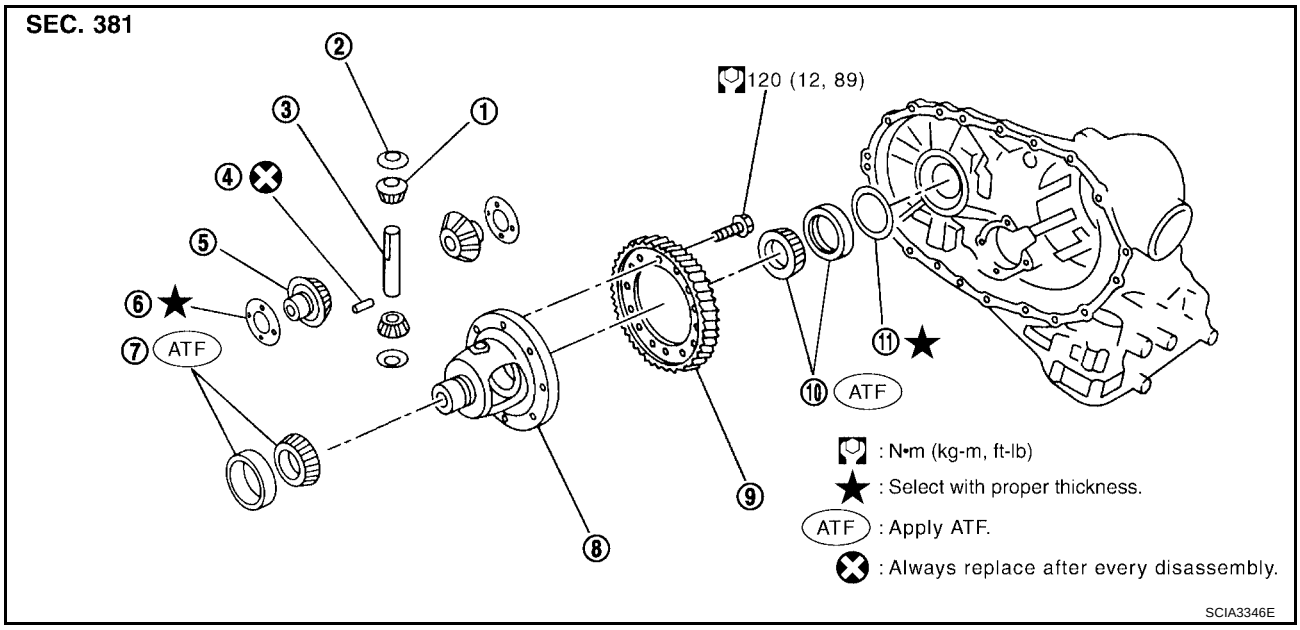

1. Pinion mate gear	2. Pinion mate thrust washer	3. Pinion mate shaft
4. Lock pin	5. Side gear	6. Side gear thrust washer
7. Differential side bearing	8. Differential case	9. Final gear
10. Differential side bearing	11. Differential side bearing adjusting shim	

DISASSEMBLY

1. Remove final gear.

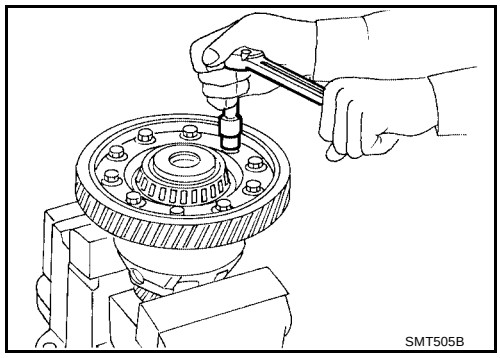

2. Press out differential side bearings.
   - **Be careful not to mix up the right and left bearings.**

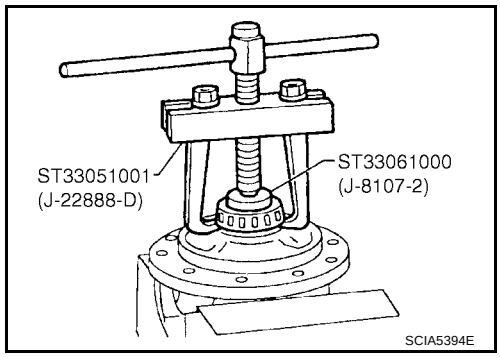

3. Remove differential side bearing outer race and side bearing adjusting shim from transaxle case.

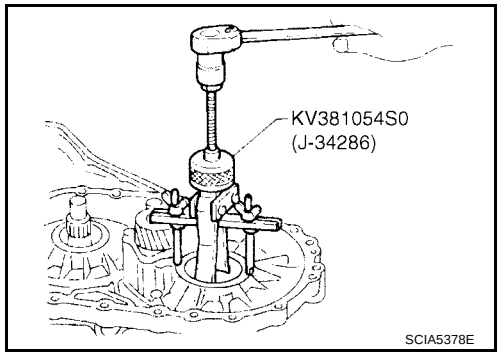

4. Drive out pinion mate shaft lock pin.

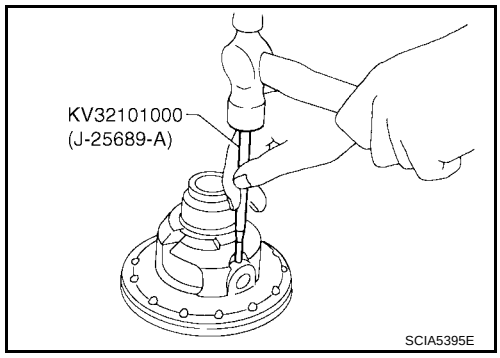

5. Draw out pinion mate shaft.
6. Remove pinion mate gears and side gears.

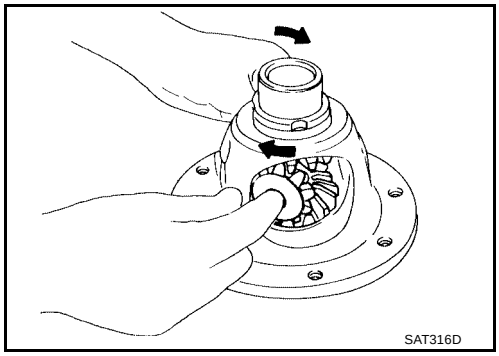

INSPECTION

Gear, Washer, Shaft and Case

- Check mating surfaces of differential case, side gears and pinion mate gears.
- Check washers for wear.

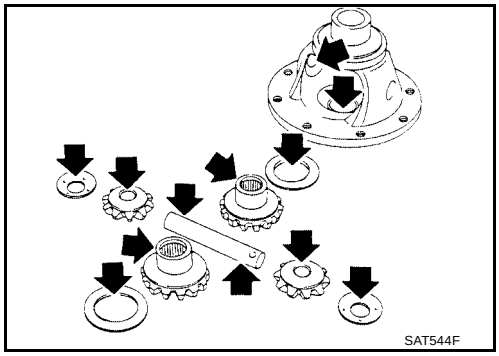

Bearings

- Make sure bearings roll freely and are free from noise, cracks, pitting or wear.
- **When replacing taper roller bearing, replace outer and inner race as a set.**

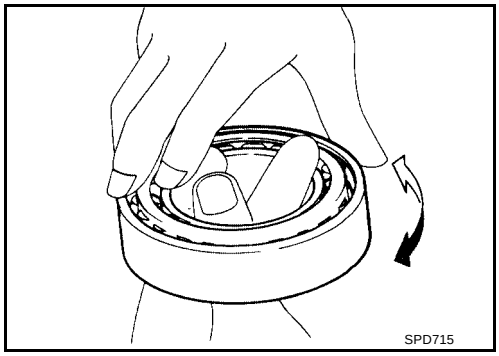

ASSEMBLY

1. Attach side gear thrust washers to side gears, then install pinion mate thrust washers and pinion mate gears in place.
   - **Apply ATF to any parts.**

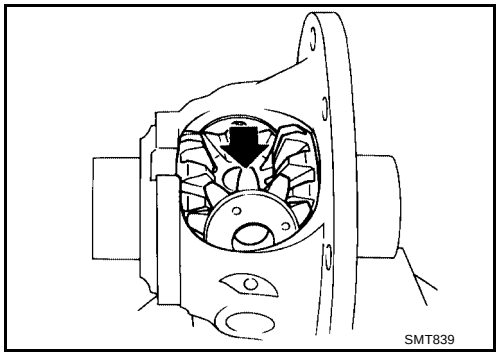

2. Insert pinion mate shaft.
   - **When inserting, be careful not to damage pinion mate thrust washers.**

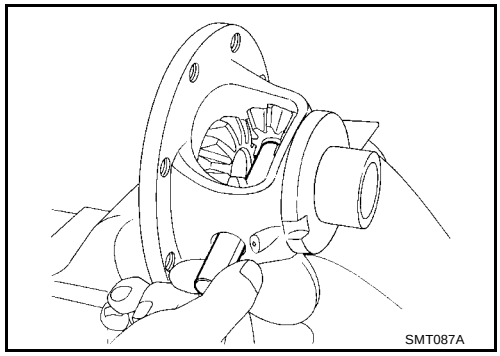

3. Measure clearance between side gear and differential case with washers following the procedure below:

a. Set Tool and dial indicator on side gear.

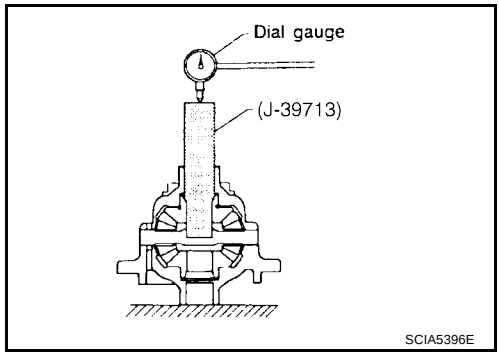

b. Move side gear up and down to measure dial indicator deflection. Always measure indicator deflection on both side gears.

Clearance between side gear and differential case with washer	**: 0.1 - 0.2 mm (0.004 - 0.008 in)**

c. If not within specification, adjust clearance by changing thickness of differential side gear thrust washers.

Differential side gear thrust washers	**: Refer to AT-368, "DIFFERENTIAL SIDE GEAR THRUST WASHERS" .**

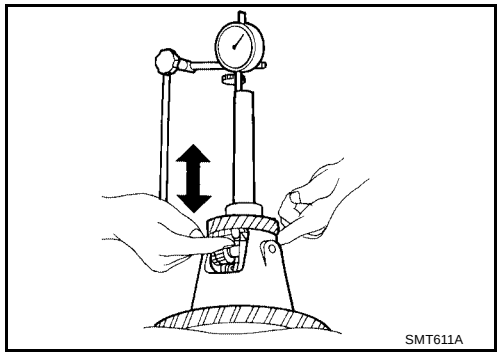

4. Install lock pin.
   - **Make sure that lock pin is flush with case.**

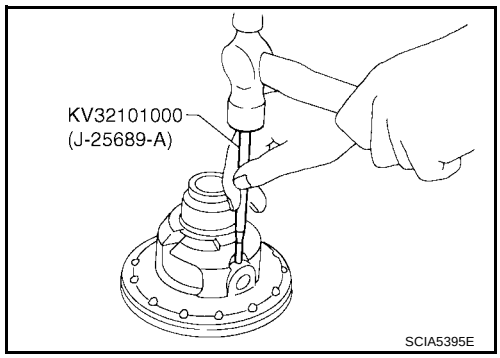

5. Press on differential side bearings.

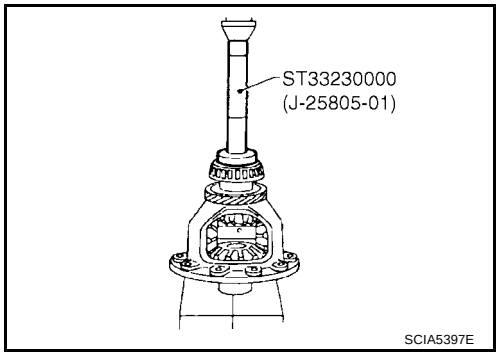

6. Install final gear and tighten fixing bolts in a crisscross pattern. Tighten final gear bolts to the specified torque. Refer to AT-336, "COMPONENTS" .

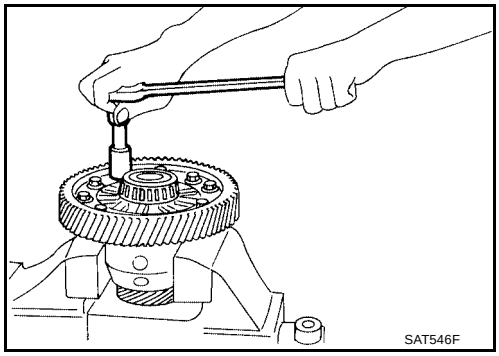

ASSEMBLY

PFP:00000

Assembly (1)

UCS000RZ

1. Install differential side oil seals on transaxle case and converter housing.

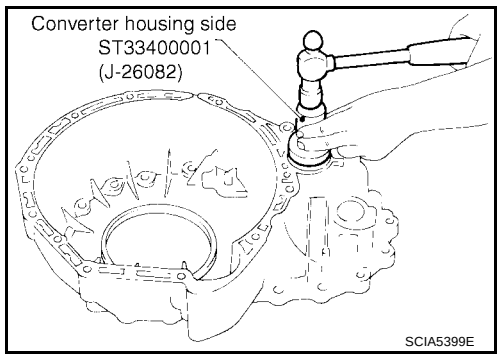

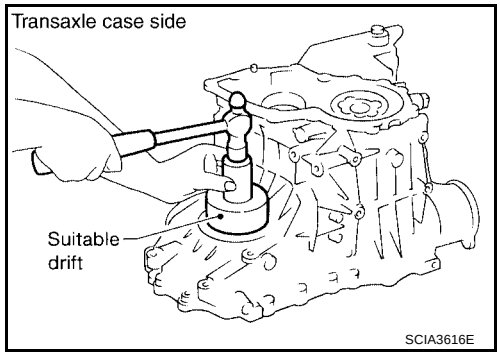

2. Install parking actuator support to transaxle case. Tighten parking actuator support bolts to the specified torque. Refer to AT-261, "OVERHAUL" .

   CAUTION:
   Pay attention to direction of parking actuator support.

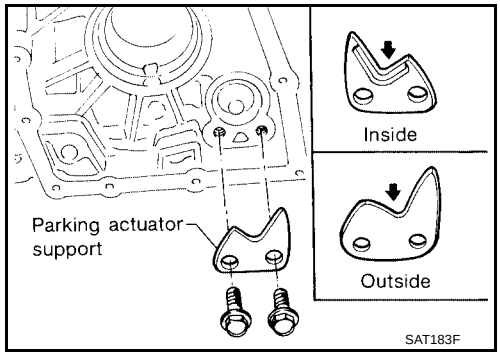

3. Install parking pawl on transaxle case and fix it with parking shaft.
4. Install return spring.

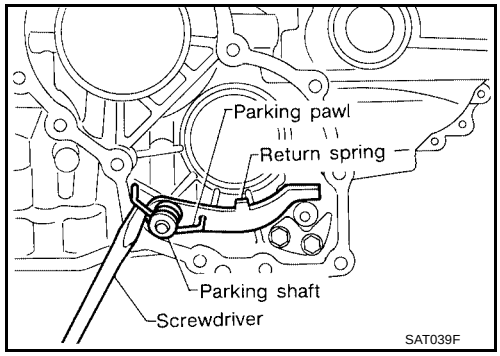

Adjustment (1)

UCS000S0

DIFFERENTIAL SIDE BEARING PRELOAD

1. Install differential side bearing outer race without adjusting shim on transaxle case.
2. Install differential side bearing outer race on converter housing.

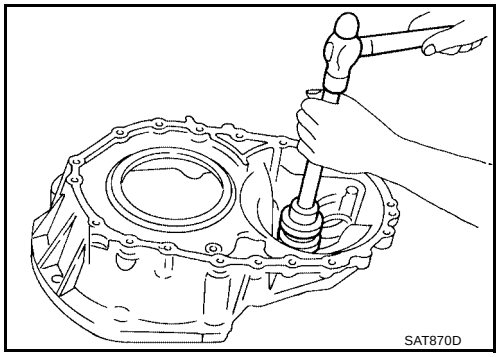

3. Place final drive assembly on transaxle case.
4. Install transaxle case on converter housing. Tighten transaxle case fixing bolts to the specified torque. Refer to AT-261, "OVERHAUL" .

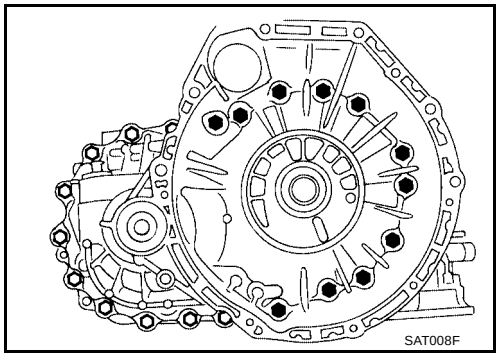

5. Attach dial indicator on differential case at converter housing side.
6. Insert Tool into differential side gear from transaxle case side.
7. Move Tool up and down and measure dial indicator deflection.
8. Select proper thickness of differential side bearing adjusting shim(s).
   Suitable shim thickness = Dial indicator deflection + Specified bearing preload

Differential side bearing preload adjusting shim	**: Refer to AT-368, "DIFFERENTIAL SIDE BEARING PRELOAD ADJUSTING SHIMS" .**
Bearing preload	**: 0.05 - 0.09 mm (0.0020 - 0.0035 in)**

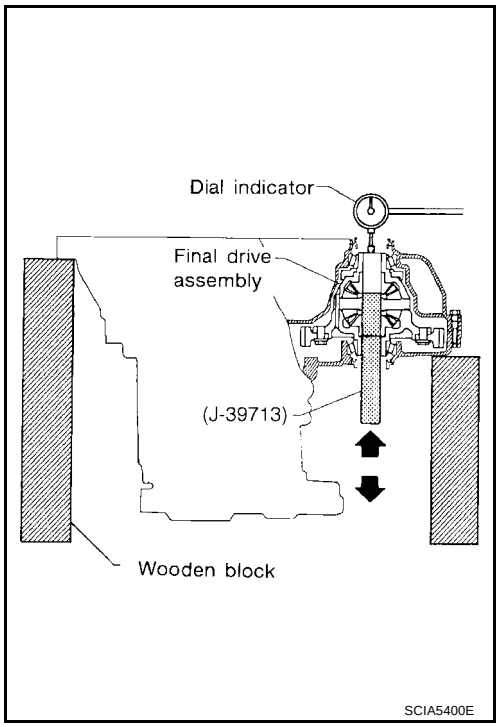

9. Remove converter housing from transaxle case.
10. Remove final drive assembly from transaxle case.
11. Remove differential side bearing outer race from transaxle case.
12. Reinstall differential side bearing outer race and shim(s) selected from SDS table on transaxle case.
13. Reinstall converter housing on transaxle case and tighten transaxle case fixing bolts to the specified torque. Refer to AT-261, "OVERHAUL" .

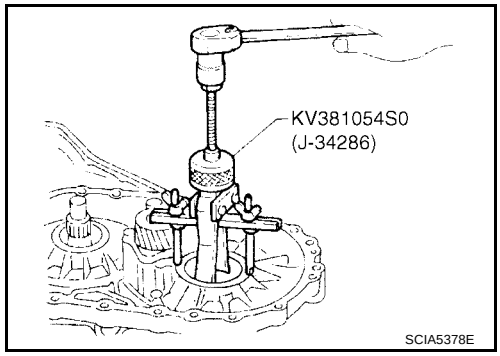

14. Insert Tool and measure turning torque of final drive assembly.
    - **Turn final drive assembly in both directions several times to seat bearing rollers correctly.**

      Turning torque of final drive assembly (New bearing)

      : 0.8 - 1.5 N-m (8.0 - 15.7 kg-cm, 7 - 13 in-lb)
    - **When old bearing is used again, turning torque will be slightly less than the above.**
    - **Make sure torque is close to the specified range.**

      Preload adapter : — (J–39713)

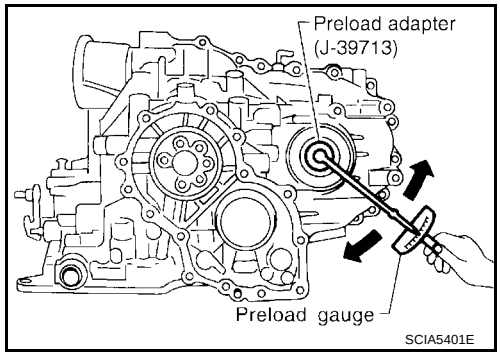

REDUCTION PINION GEAR BEARING PRELOAD

1. Remove transaxle case and final drive assembly from converter housing.
2. Select proper thickness of reduction pinion gear bearing adjusting shim using the following procedures.

a. Place reduction pinion gear on transaxle case as shown.

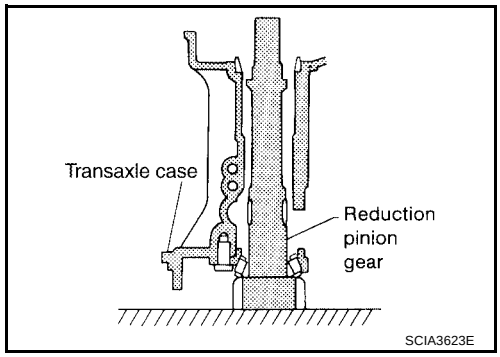

b. Place idler gear bearing on transaxle case.

c. Measure dimensions “B” “C” and “D” and calculate dimension “A”.

   A = D – (B + C)

   “A” : Distance between the surface of idler gear bearing inner race and the adjusting shim mating surface of reduction pinion gear.

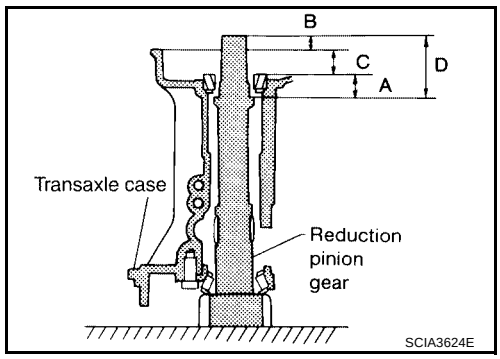

- Measure dimension “B” between the end of reduction pinion gear and the surface of transaxle case.
- **Measure dimension “B” in at least two places.**

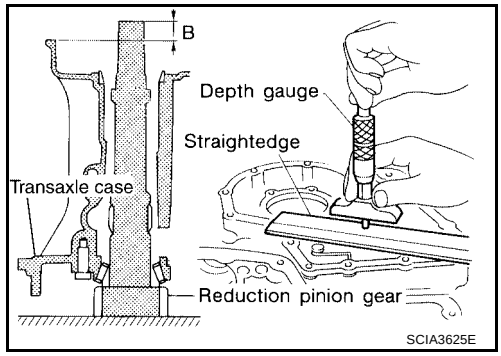

- Measure dimension “C” between the surface of idler gear bearing inner race and the surface of transaxle case.
- **Measure dimension “C” in at least two places.**

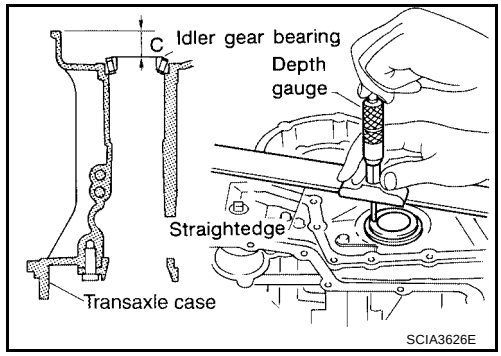

- Measure dimension “D” between the end of reduction pinion gear and the adjusting shim mating surface of reduction pinion gear.
- **Measure dimension “D” in at least two places.**
- Calculate dimension “A”.

  A = D – (B + C)

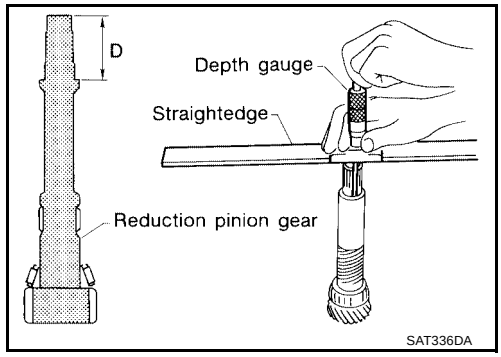

d. Measure dimension “E” between the end of idler gear and the idler gear bearing inner race mating surface of idler gear.
   - **Measure dimension “E” in at least two places.**

e. Select proper thickness of reduction pinion gear bearing adjusting shim.

   Proper shim thickness = A – E – 0.05 mm (0.0020 in)*

   (*: Bearing preload)

   Reduction pinion gear bearing adjusting shim : **Refer to** **AT-369, "REDUCTION PINION GEAR BEARING ADJUSTING SHIMS"** **.**

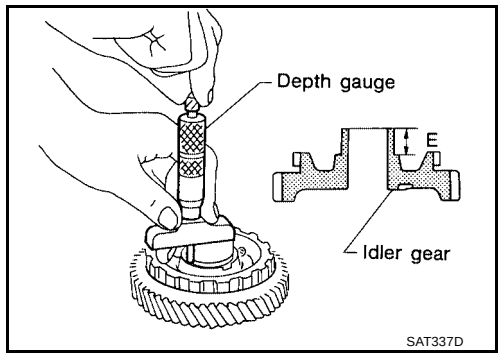

3. Install reduction gear and reduction gear bearing adjusting shim selected in step 2-e on transaxle case.
4. Press idler gear bearing inner race on idler gear.
5. Press idler gear on reduction gear.

CAUTION:
Press idler gear until idler gear fully contacts adjusting shim.

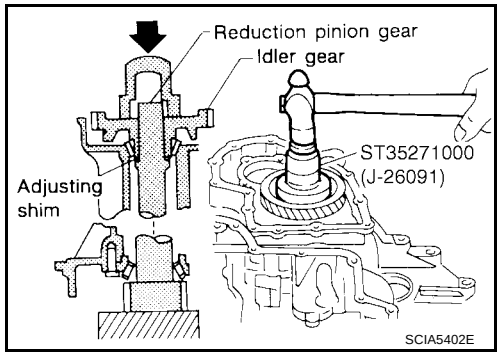

6. Tighten idler gear lock nut to the specified torque. Refer to AT-261, "OVERHAUL" .

CAUTION:
Lock idler gear with parking pawl when tightening lock nut.

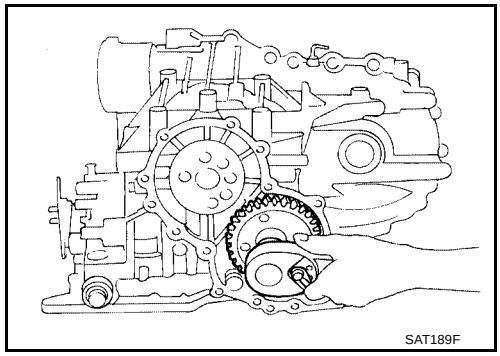

7. Measure turning torque of reduction pinion gear.
   - **When measuring turning torque, turn reduction pinion gear in both directions several times to seat bearing rollers correctly.**

     Turning torque of reduction pinion gear

     : 0.05 - 0.39 N-m (0.5 - 4.0 kg-cm, 0.43 - 3.47 in-lb)

   - **If turning torque is out of specification, decrease or increase thickness of reduction pinion gear bearing adjusting shim.**

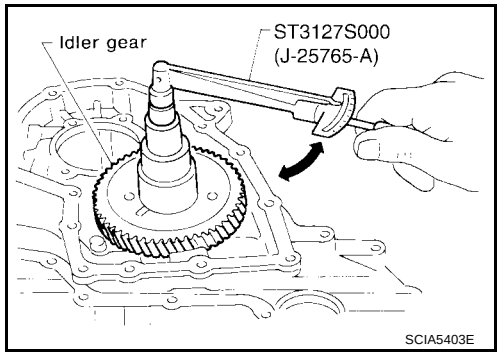

8. After properly adjusting turning torque, clinch idler gear lock nut as shown.

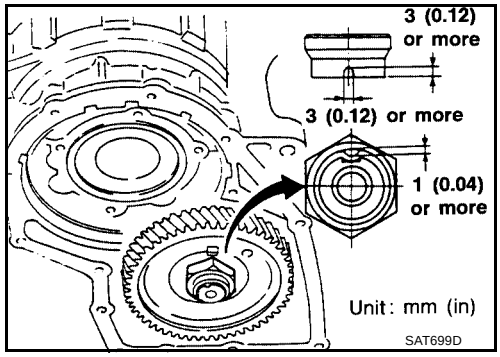

OUTPUT SHAFT END PLAY

- Measure clearance between side cover and the end of the output shaft bearing.
- Select proper thickness of adjusting shim so that clearance is within specifications.

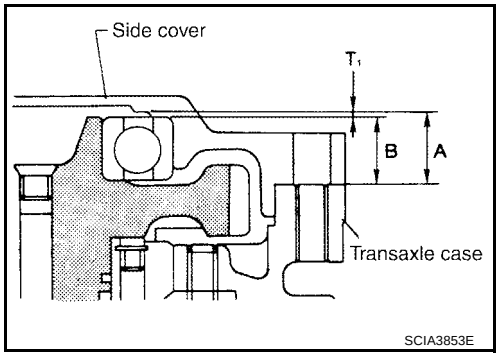

1. Install bearing retainer for output shaft.

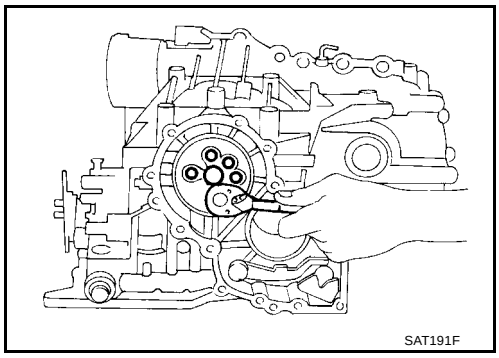

2. Install needle bearing on bearing retainer.

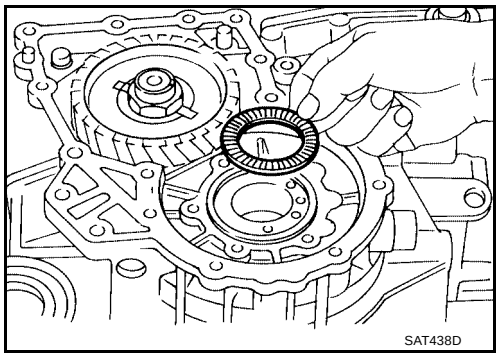

3. Install output shaft on transaxle case.

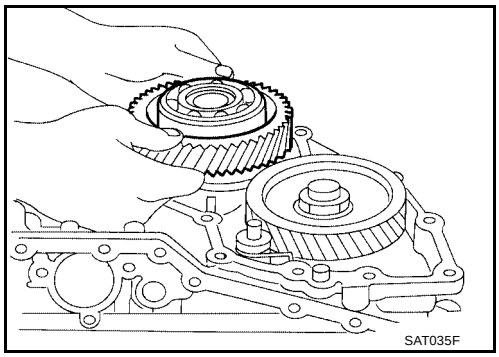

4. Measure dimensions "ℓ_1" and "ℓ_2" at side cover and then calculate dimension "A".
   - Measure dimension "ℓ_1" **and "ℓ_2" in at least two places.**

     "A" : Distance between transaxle case fitting surface and adjusting shim mating surface.

     $A = \ell_1 - \ell_2$

     ℓ_2 : Height of gauge

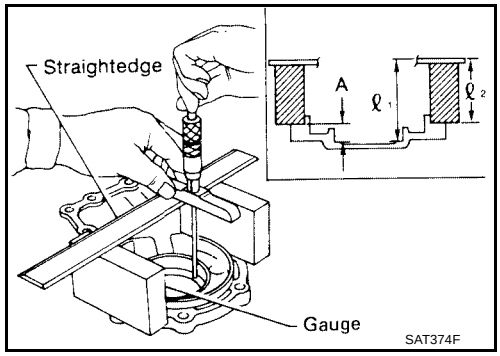

5. Measure dimensions "ℓ_2" and "ℓ_3" and then calculate dimension "B".
   - Measure "ℓ_2" **and "ℓ_3" in at least two places.**

     "B" : Distance between the end of output shaft bearing outer race and the side cover fitting surface of transaxle case.

     $B = \ell_2 - \ell_3$

     ℓ_2 : Height of gauge

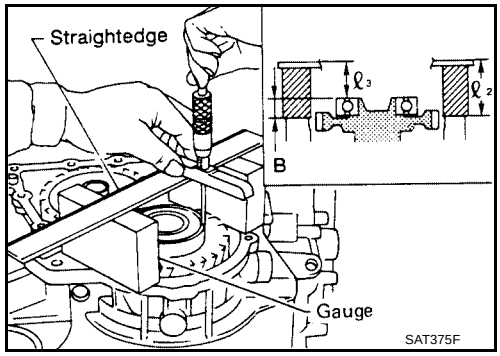

6. Select proper thickness of adjusting shim so that output shaft end play (clearance between side cover and output shaft bearing) is within specifications.

Output shaft end play (A – B)	**: 0 - 0.15 mm (0 - 0.0059 in)**
Output shaft end play adjusting shims	**: Refer to AT-371, "OUTPUT SHAFT ADJUSTING SHIMS" .**

7. Install adjusting shim on output shaft bearing.

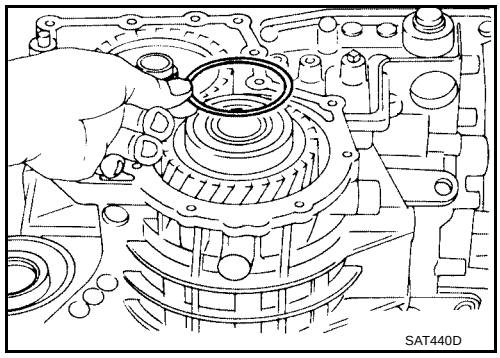

Assembly (2)

UCS000S1

1. Apply anaerobic liquid gasket to transaxle case as shown in illustration. Refer to GI-43, "RECOMMENDED CHEMICAL PRODUCTS AND SEALANTS" .

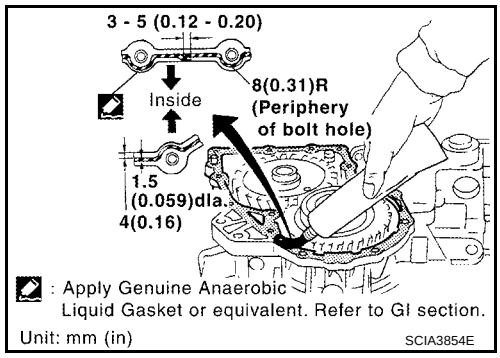

2. Set side cover on transaxle case.

   CAUTION:

   Apply locking sealant to the mating surface of transaxle case.

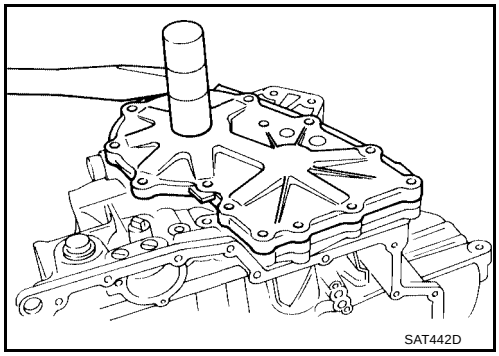

3. Tighten side cover fixing bolts to specified torque. Refer to AT-261, "OVERHAUL" .

   CAUTION:

   - **Do not mix bolts A and B.**
   - **Always replace bolts A and B as they are self-sealing bolts.**

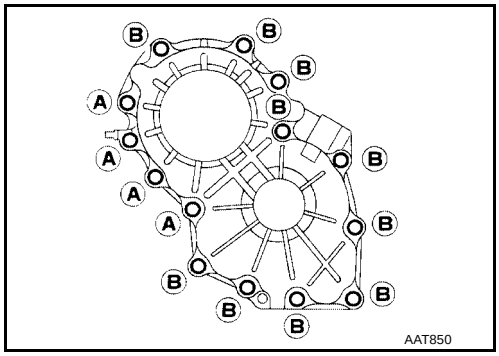

4. Remove paper rolled around bearing retainer.
5. Install thrust washer on bearing retainer.

   CAUTION:

   Apply petroleum jelly to thrust washer.

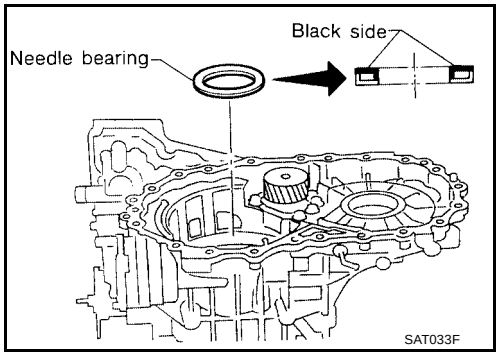

6. Install forward clutch assembly.

   CAUTION:

   - **Align teeth of low & reverse brake drive plates before installing.**
   - **Make sure that bearing retainer seal rings are not spread.**
   - **If forward clutch assembly is correctly seated, points 1 and 2 are at almost same level.**

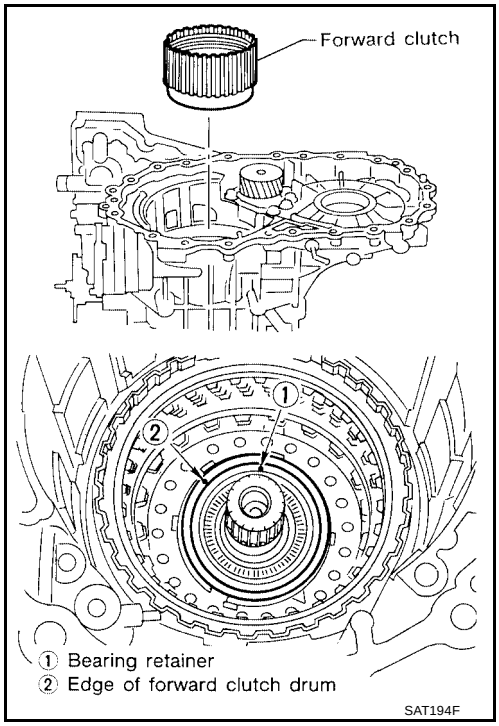

7. Install thrust needle bearing on bearing retainer.

CAUTION:

- **Apply petroleum jelly to thrust needle bearing.**
- **Pay attention to direction of thrust needle bearing.**

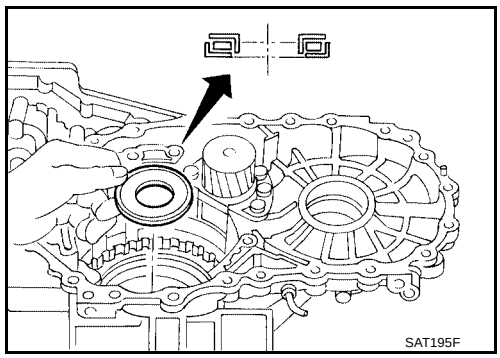

8. Install overrun clutch hub.

CAUTION:

- **Apply petroleum jelly to thrust washers.**
- **Align teeth of overrun clutch drive plates before installing.**

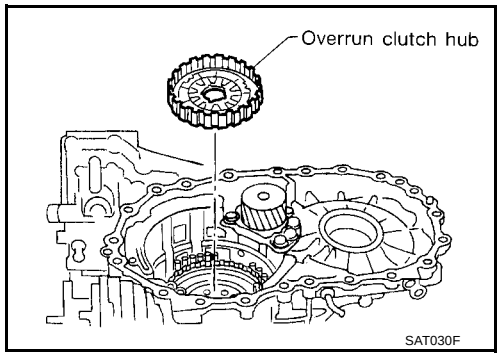

9. Hold forward clutch hub and turn rear internal gear.
Check overrun clutch hub for correct directions of lock and unlock.

- **If not shown as illustrated, check installed direction of forward one-way clutch.**

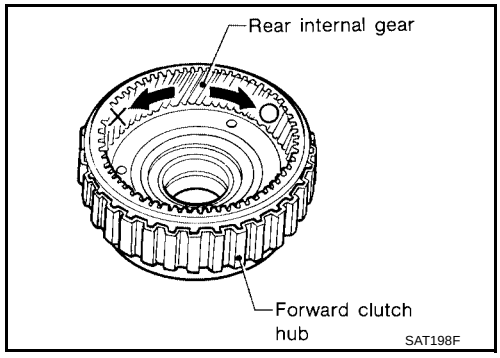

10. Install forward clutch hub and rear internal gear assembly.

CAUTION:

- **Align teeth of forward clutch drive plates before installing.**
- **Check that three hooks of thrust washer are correctly aligned after installing.**

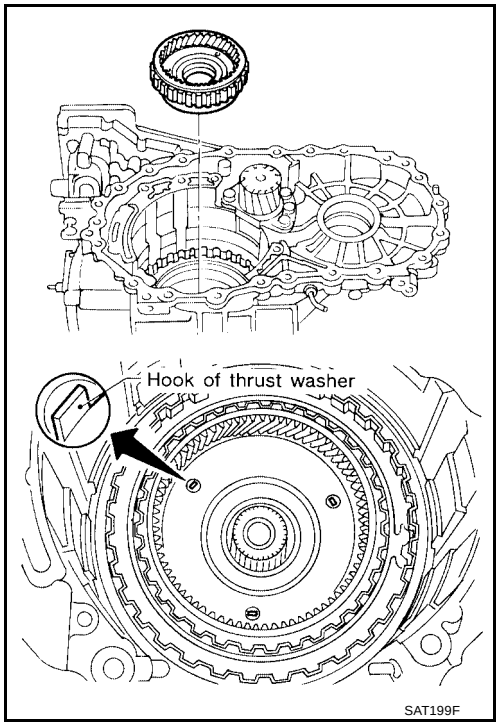

11. Install rear planetary carrier assembly and rear sun gear according to the following procedures.

a. Install needle bearings on rear planetary carrier.

CAUTION:

- **Apply petroleum jelly to needle bearings.**
- **Pay attention to direction of needle bearings.**

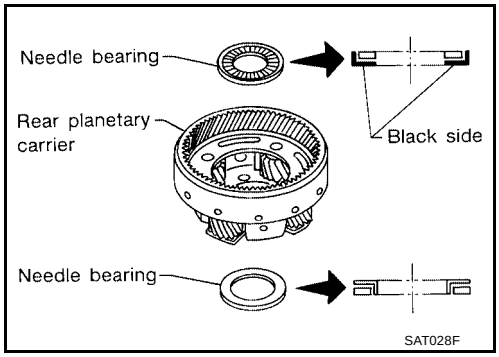

b. Install rear sun gear on rear planetary carrier.

CAUTION:

Pay attention to direction of rear sun gear.

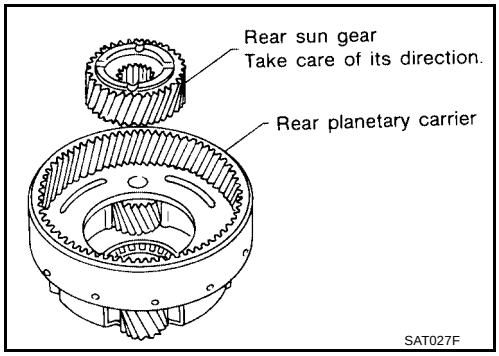

c. Install rear planetary carrier on transaxle case.

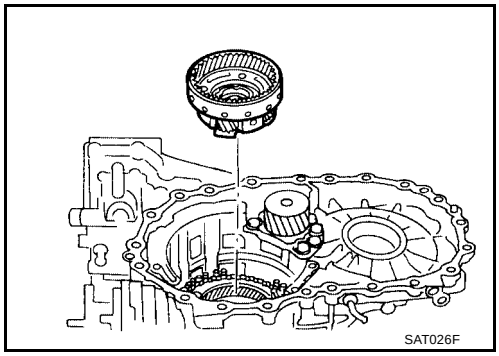

12. Install thrust needle bearing on front planetary carrier, then install them together on transaxle case.

CAUTION:

- **Apply petroleum jelly to thrust needle bearing.**
- **Pay attention to direction of thrust needle bearing.**

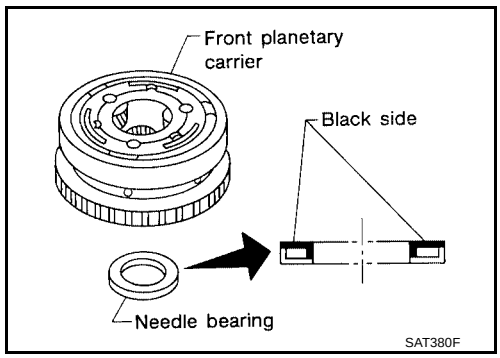

13. Install low & reverse brake piston according to the following procedures.

a. Set and align return springs to transaxle case gutters as shown in illustration.

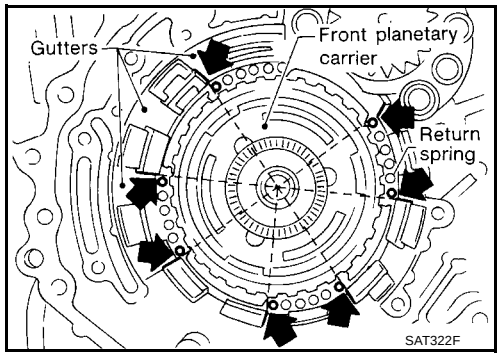

b. Set and align piston with retainer.

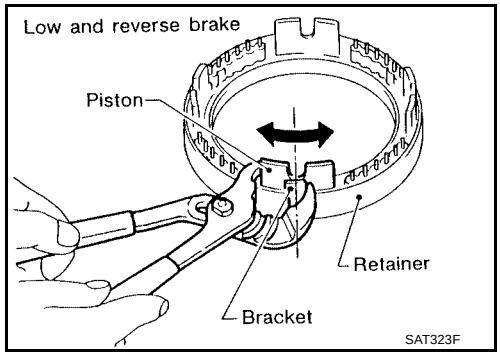

c. Install piston and retainer assembly on the transaxle case.

CAUTION:

Align bracket to specified gutter as indicated in illustration.

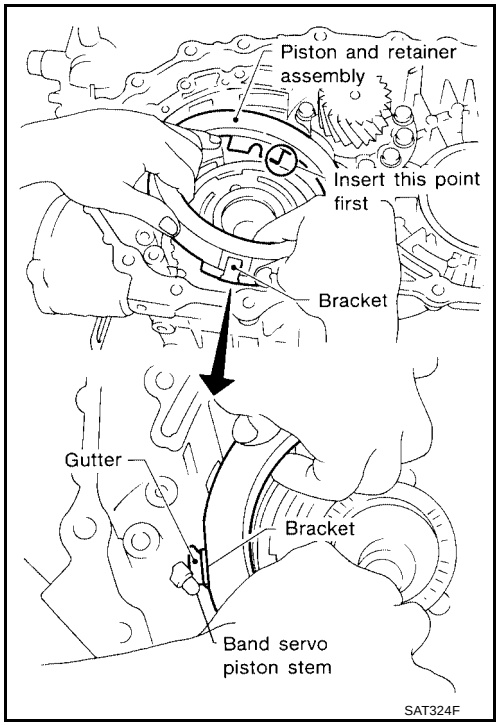

d. Check that each protrusion of piston is correctly set to corresponding return spring as follows.

- **Push piston and retainer assembly evenly and confirm they move smoothly.**
- **If they can not move smoothly, remove piston and retainer assembly and align return spring correctly as instructed in step "a".**

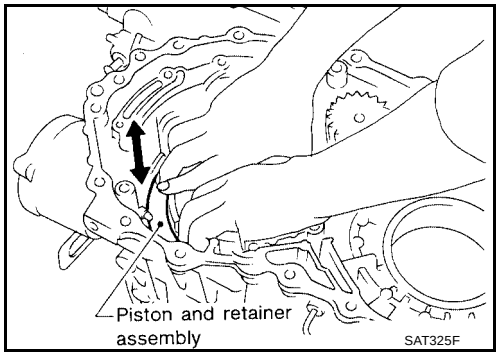

e. Push down piston and retainer assembly and install snap ring.

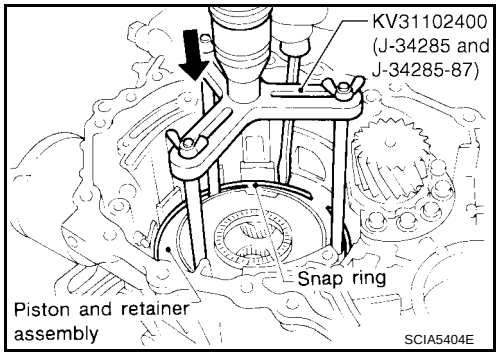

14. Install low one-way clutch to front planetary carrier by turning carrier in the direction of the arrow shown.

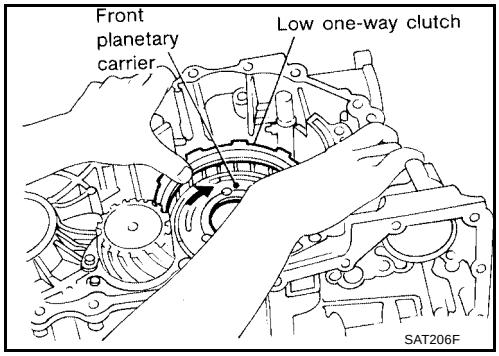

15. Install snap ring with screwdriver.

CAUTION:

- **Forward clutch and bearing must be correctly installed for snap ring to fit into groove of transaxle case.**
- **Do not expand snap ring excessively.**

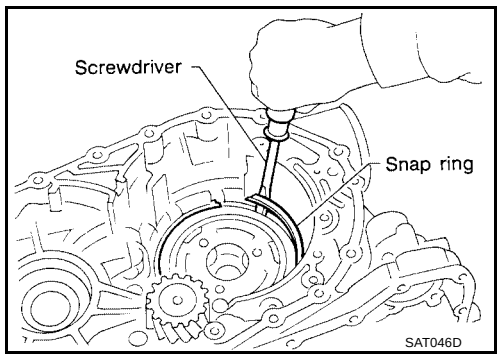

16. Install needle bearing on transaxle case.

CAUTION:

- **Apply petroleum jelly to needle bearing.**
- **Pay attention to direction of needle bearing.**

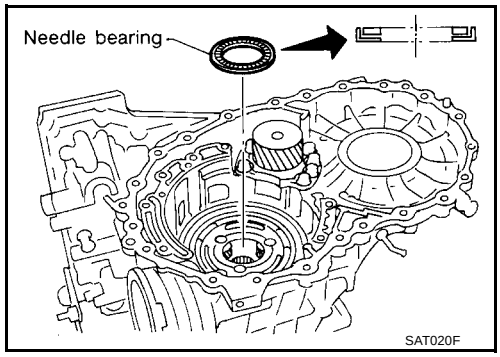

17. Install bearing race, needle bearing and high clutch hub on front sun gear.

CAUTION:

- **Apply petroleum jelly to needle bearing.**
- **Pay attention to direction of needle bearing.**

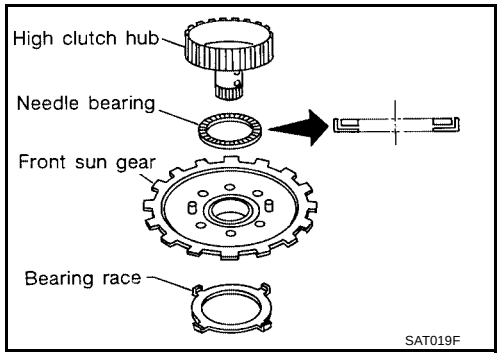

18. Install needle bearing and high clutch drum on high clutch hub.

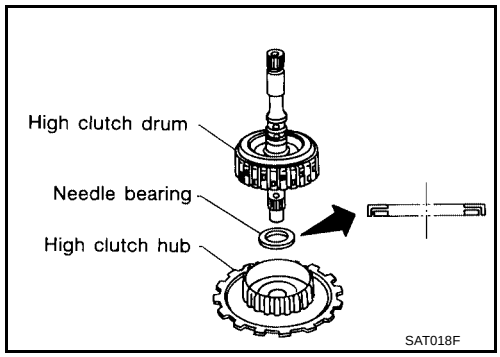

19. Install needle bearing on high clutch drum.

    CAUTION:
    - **Apply petroleum jelly to needle bearing.**
    - **Pay attention to direction of needle bearing.**

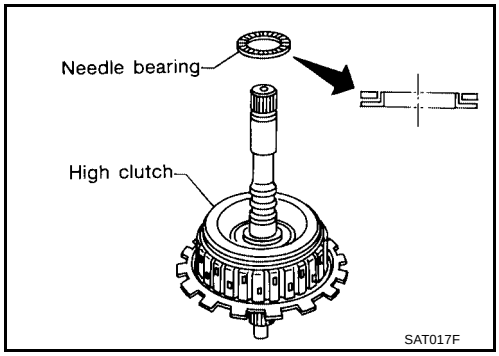

20. Remove paper rolled around input shaft.
21. Install input shaft assembly in reverse clutch.

    CAUTION:
    Align teeth of reverse clutch drive plates before installing.

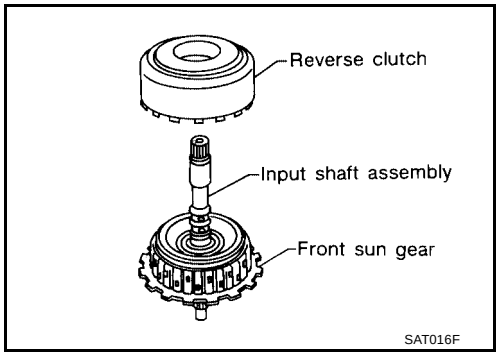

22. Install reverse clutch assembly on transaxle case.

    CAUTION:
    Align teeth of high clutch drive plates before installing.

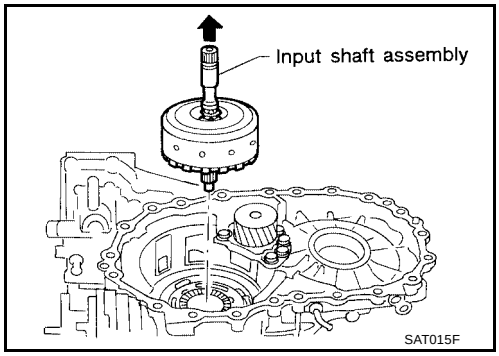

Adjustment (2)

UCS000S2

When any parts listed below are replaced, adjust total end play and reverse clutch end play.

Part name	Total end play	Reverse clutch end play
Transaxle case	●	●
Overrun clutch hub	●	●
Rear internal gear	●	●
Rear planetary carrier	●	●
Rear sun gear	●	●
Front planetary carrier	●	●
Front sun gear	●	●
High clutch hub	●	●
High clutch drum	●	●
Oil pump cover	●	●
Reverse clutch drum	—	●

TOTAL END PLAY

1. Adjust total end play “T_1 ”.

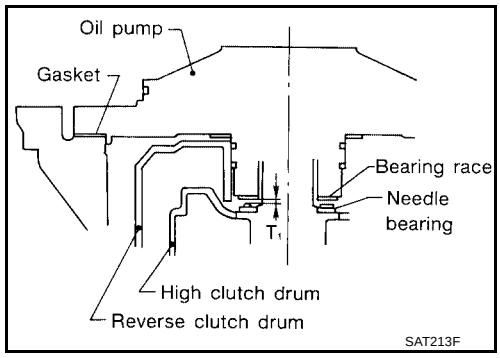

a. With original bearing race installed, place Tool onto oil pump. The long ends of legs should be placed firmly on machined surface of oil pump assembly. The gauging cylinder should rest on top of bearing race. Lock gauging cylinder in place with set screw.

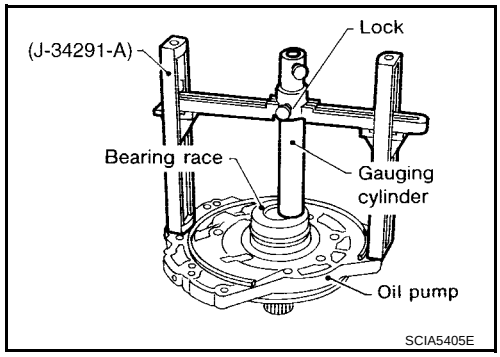

b. Install gauging plunger into cylinder.

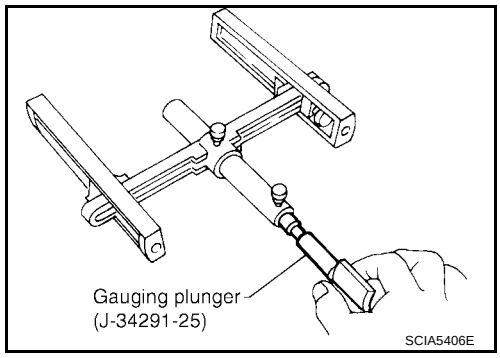

c. With needle bearing installed on high clutch drum, place Tool legs on machined surface of transaxle case (with gasket). Then allow plunger to rest on needle bearing.

d. Measure gap between cylinder and plunger. This measurement should give exact total end play.

Total end play “T_1 ”

: 0.25 - 0.55 mm (0.0098 - 0.0217 in)

- If end play is out of specification, decrease or increase thickness of bearing race as necessary.

Available bearing race for adjusting total end play

: Refer to AT-371, "BEARING RACE FOR ADJUSTING TOTAL END PLAY" .

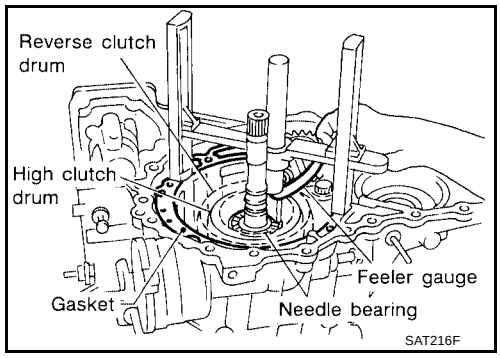

2. Adjust reverse clutch drum end play “T_2 ”.

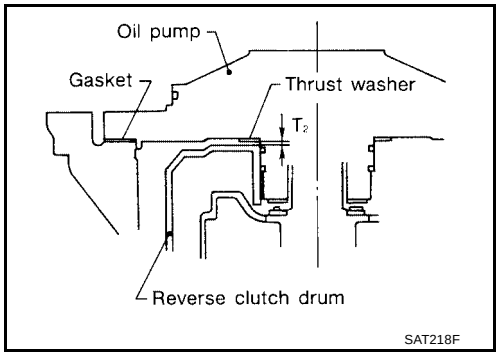

a. Place Tool on machined surface of transaxle case (with gasket). Then allow gauging cylinder to rest on reverse clutch drum. Lock cylinder in place with set screw.

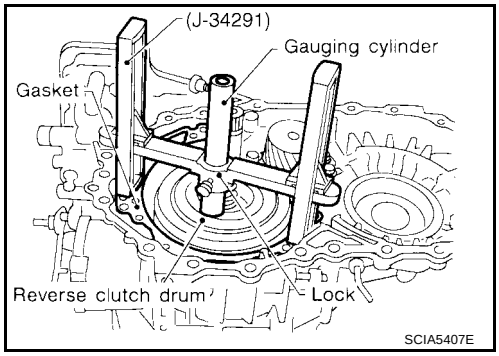

b. Install gauging plunger into cylinder.

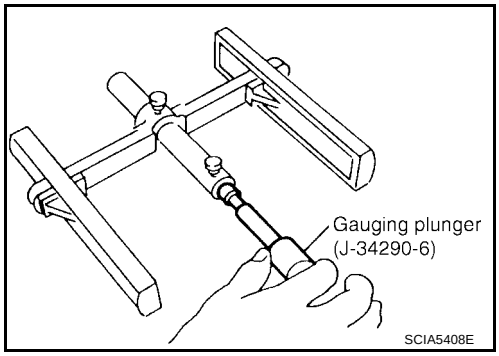

c. With original thrust washer installed on oil pump, place Tool legs onto machined surface of oil pump assembly. Then allow plunger to rest on thrust washer.

d. Measure gap between cylinder and plunger with feeler gauge. This measurement should give exact reverse clutch drum end play.

Reverse clutch drum end play “T_2 ”

: 0.61 - 1.00 mm (0.0240 - 0.0394 in)

- If end play is out of specification, decrease or increase thickness of thrust washer as necessary.

Available thrust washer for adjusting reverse clutch drum end play

: Refer to AT-371, "THRUST WASHERS FOR ADJUSTING REVERSE CLUTCH DRUM END PLAY" .

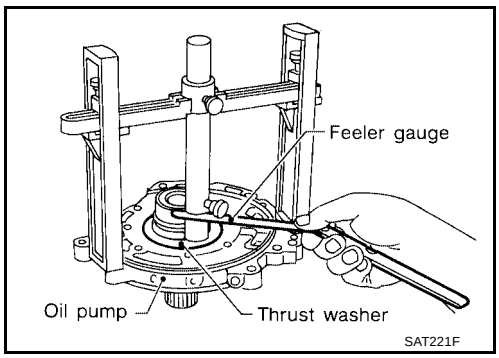

Assembly (3)

UCS000S3

1. Install anchor end pin and lock nut on transaxle case.
2. Place brake band on outside of reverse clutch drum. Tighten anchor end pin just enough so that brake band is evenly fitted on reverse clutch drum.

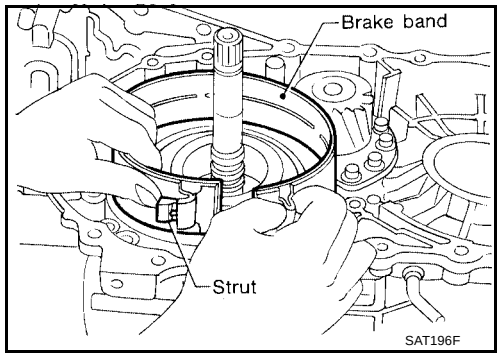

3. Place bearing race selected in total end play adjustment step on oil pump cover.

   CAUTION:
   Apply petroleum jelly to bearing race.
4. Place thrust washer selected in reverse clutch end play step on reverse clutch drum.

   CAUTION:
   Apply petroleum jelly to thrust washer.

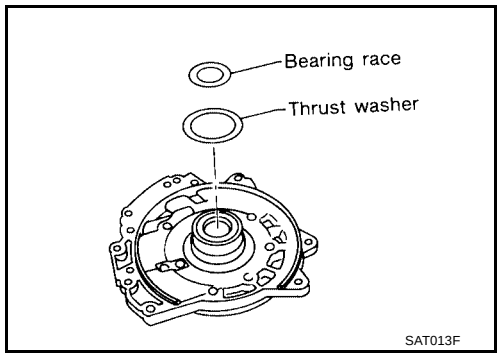

5. Install oil pump assembly and gasket on transaxle case.

   CAUTION:
   Do not reuse gasket.
6. Tighten oil pump fixing bolts to the specified torque.

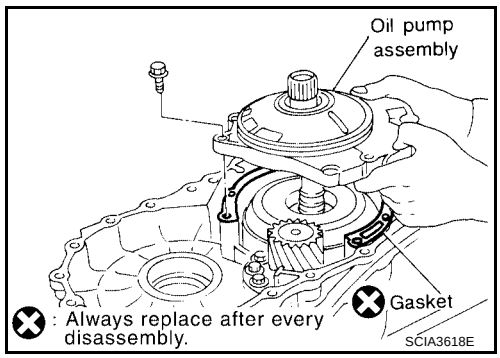

7. Install O-ring to input shaft.

   CAUTION:
   - **Apply petroleum jelly to O-ring.**
   - **Do not reuse O-ring.**

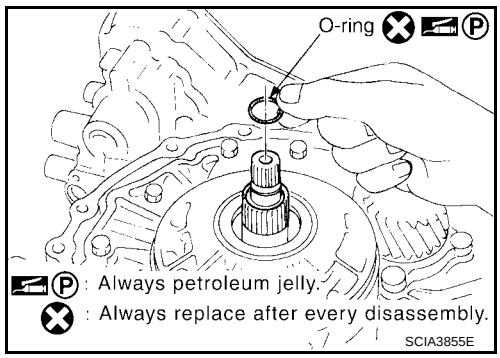

8. Adjust brake band.

a. Tighten anchor end pin to the specified torque.

Anchor end pin : Refer to AT-368, "BRAKE BAND" .

- **Do not reuse anchor end pin.**

b. Back off anchor end pin two and a half turns.

c. While holding anchor end pin, tighten lock nut.

Lock nut : Refer to AT-368, "BRAKE BAND" .

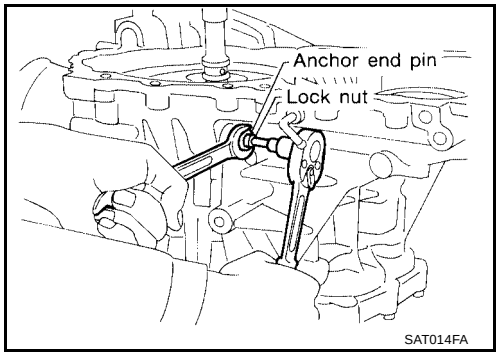

9. Apply compressed air to oil holes of transaxle case and check operation of brake band.

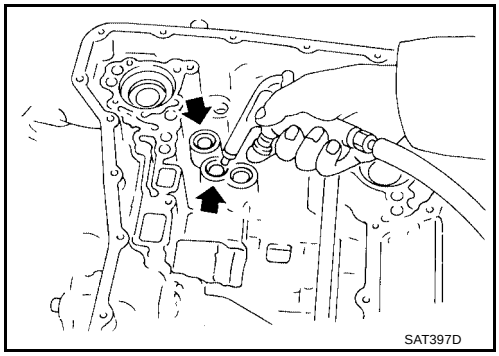

10. Install final drive assembly on transaxle case.

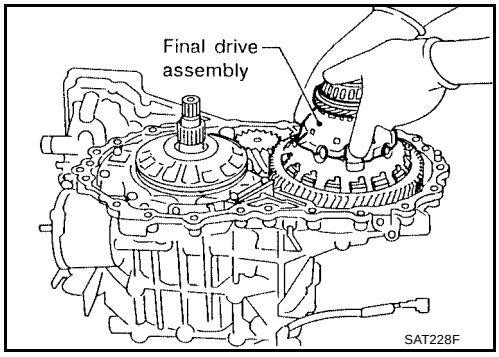

11. Install differential lubricant tube on converter housing. Tighten differential lubricant tube bolts to the specified torque. Refer to AT-261, "OVERHAUL" .

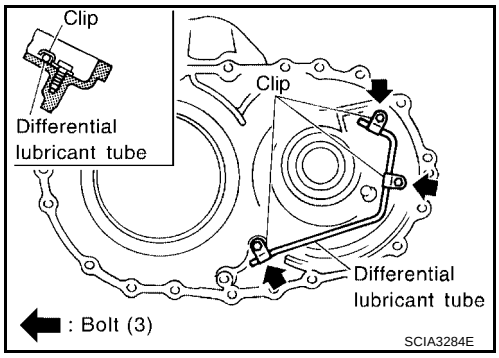

12. Install O-ring on differential oil port of transaxle case.

CAUTION:

- **Apply ATF to O-ring.**
- **Do not reuse O-ring.**

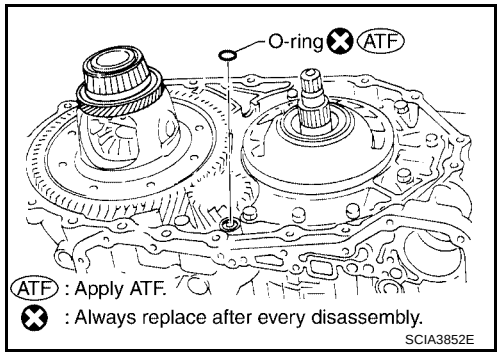

13. Install converter housing on transaxle case.

- **Apply locking sealant to mating surface of converter housing.**

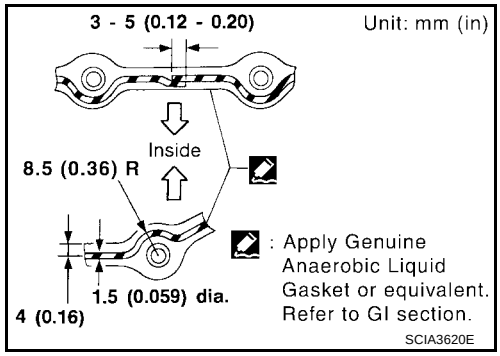

- **Tighten converter housing bolts to the specified torque. Refer to AT-261, "OVERHAUL" .**

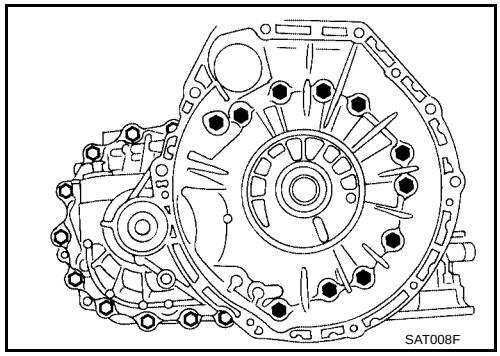

14. Install accumulator piston.

a. Check contact surface of accumulator piston for damage.

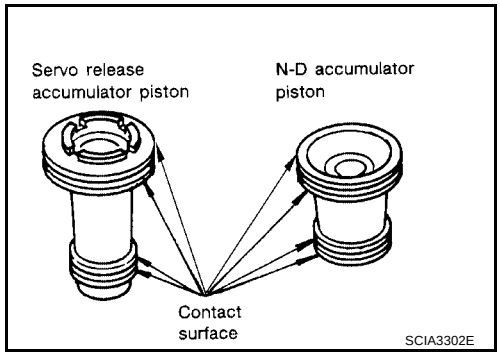

b. Install O-rings on accumulator piston.

CAUTION:

- **Do not reuse O-rings.**
- **Apply ATF to O-rings.**

Accumulator piston O-rings : Refer to AT-365, "O-RING"

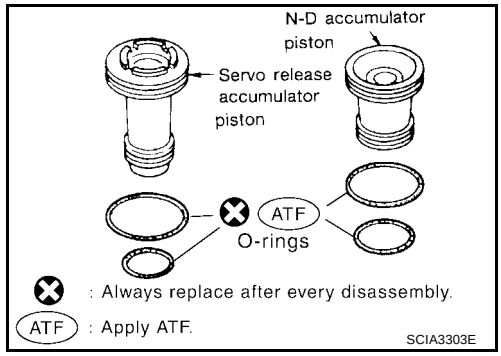

c. Install accumulator pistons and return springs on transaxle case.

CAUTION:

Apply ATF to inner surface of transaxle case.

Return springs : Refer to AT-366, "RETURN SPRING" .

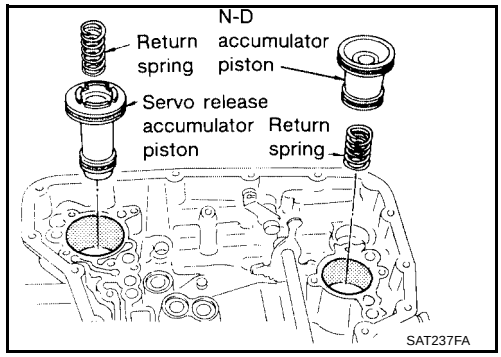

15. Install lip seals for band servo oil holes on transaxle case.

CAUTION:

- **Do not reuse lip seals.**
- **Apply petroleum jelly to lip seals.**

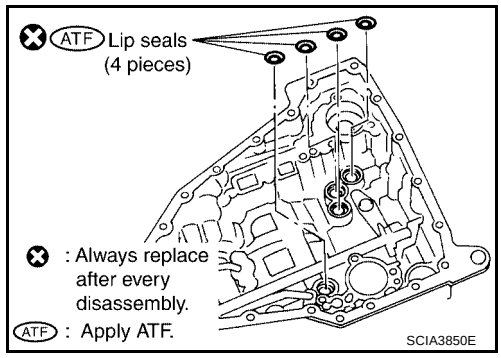

16. Install low & reverse brake tube and oil sleeve. Tighten low & reverse brake tube bolts to the specified torque. Refer to AT-261, "OVERHAUL" .

CAUTION:

Do not reuse oil sleeve.

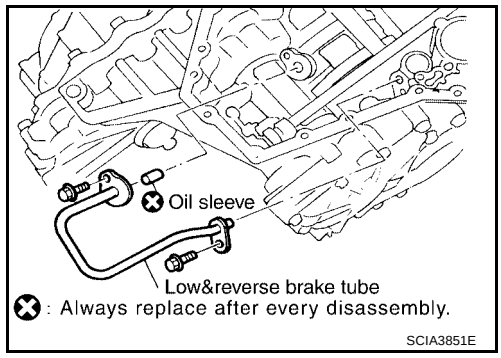

17. Install control valve assembly.

a. Insert manual valve into control valve assembly.

CAUTION:

Apply ATF to manual valve.

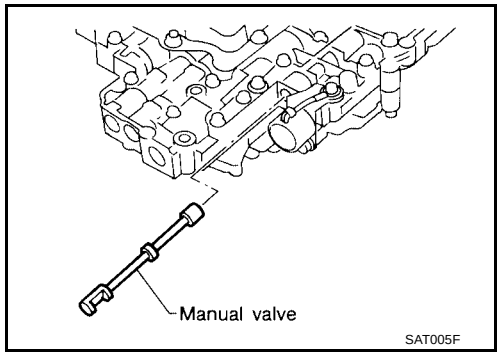

b. Set manual shaft in Neutral position.

c. Install control valve assembly on transaxle case while aligning manual valve with manual plate.

d. Pass solenoid harness through transaxle case and install terminal body on transaxle case by pushing it.

e. Install stopper ring to terminal body.

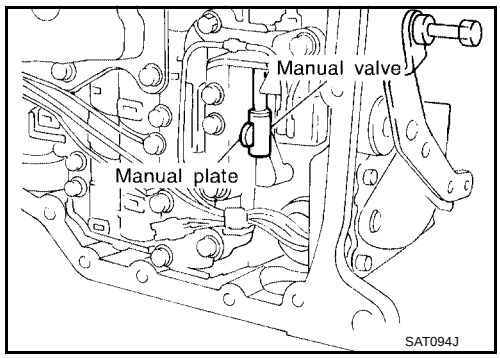

f. Tighten bolts **I** , **X** and ●. Refer to AT-261, "OVERHAUL" .

Bolt length, number and location:

Bolt symbol	I	X	●
Bolt length " ℓ " mm (in)	40 (1.57)	33 (1.30)	43.5 (1.713)
Number of bolts	5	6	2

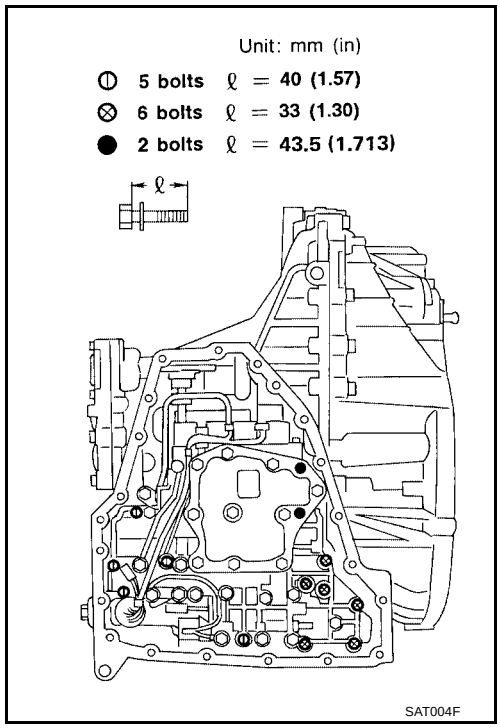

18. Install oil pan.

a. Attach a magnet to oil pan.

b. Install new oil pan gasket on transaxle case.

c. Install oil pan on transaxle case.

CAUTION:

- **Always replace oil pan bolts as they are self-sealing bolts.**
- **Tighten four bolts in a crisscross pattern to prevent dislocation of gasket.**

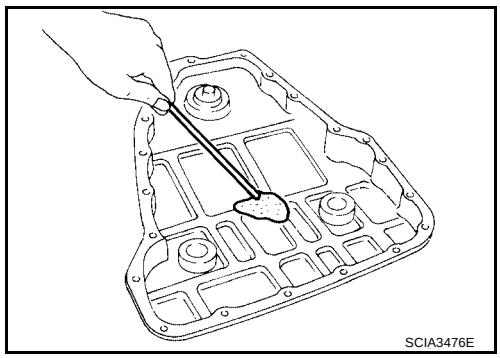

d. Tighten oil pan bolts and drain plug to the specified torque. Refer to AT-261, "OVERHAUL" .

19. Install park/neutral position (PNP) switch.

a. Set manual shaft in P position.

b. Temporarily install park/neutral position (PNP) switch on manual shaft.

c. Move selector lever to N position.

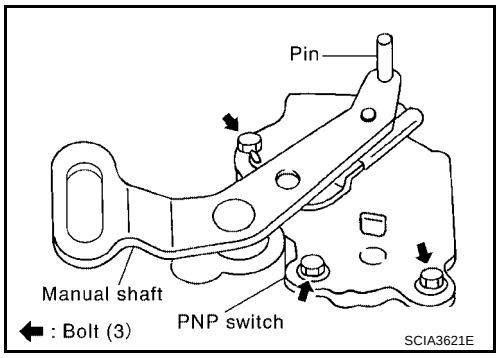

d. Use a 4 mm (0.16 in) pin for this adjustment.

i. Insert the pin straight into the manual shaft adjustment hole.

ii. Rotate park/neutral position (PNP) switch until the pin can also be inserted straight into hole in park/neutral position (PNP) switch.

e. Tighten park/neutral position (PNP) switch fixing bolts. Refer to AT-261, "OVERHAUL" .

f. Remove pin from adjustment hole after adjusting park/neutral position (PNP) switch.

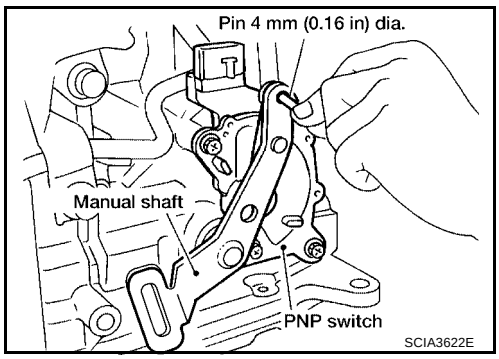

20. Install A/T fluid charging pipe and fluid cooler tube to transaxle case. Tighten A/T fluid charging pipe and fluid cooler tube bolts to the specified torque. Refer to AT-261, "OVERHAUL" .

CAUTION:

Do not reuse O-ring and copper washer.

21. Install A/T fluid level gauge.

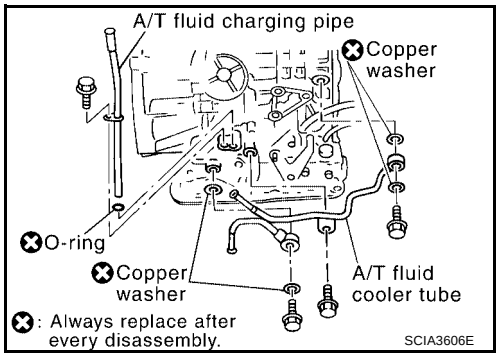

22. Install torque converter.

a. Pour ATF into torque converter.

CAUTION:

- **Approximately 1 liter (1-1/8 US qt, 7/8 Imp qt) of fluid is required for a new torque converter.**
- **When reusing old torque converter, add the same amount of fluid as was drained.**

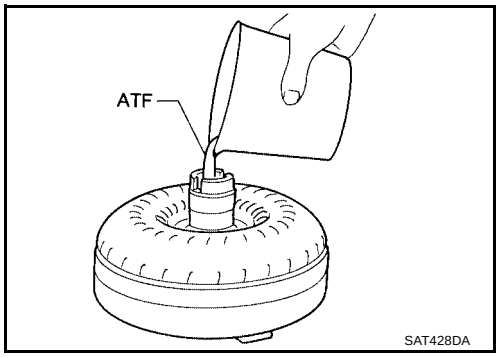

b. Install torque converter while aligning notches of torque converter with notches of oil pump.

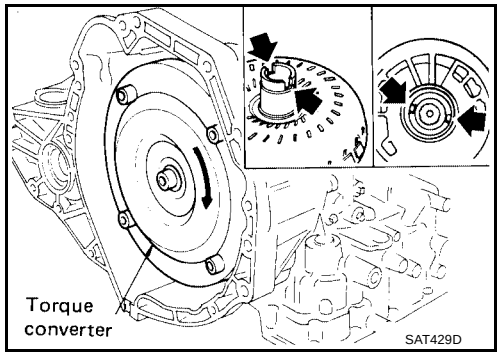

c. Measure distance “A” to check that torque converter is in proper position.

Distance A : 14 mm (0.55 in) or more

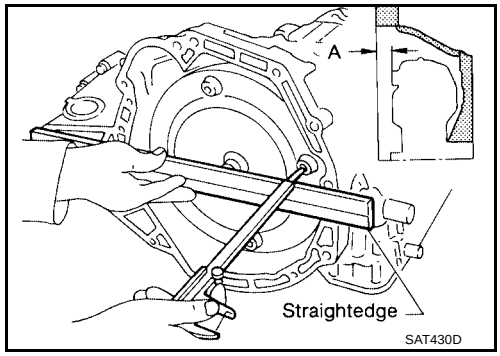

SERVICE DATA AND SPECIFICATIONS (SDS)

PFP:00030

General Specifications

UCS000S4

Engine		VQ35DE
Automatic transaxle model		RE4F04B
Automatic transaxle assembly	Model code number	89X01
Transaxle gear ratio	1st	2.785
	2nd	1.545
	3rd	1.000
	4th	0.694
	Reverse	2.272
	Final drive	3.525
Recommended fluid		Genuine Nissan Matic D ATF or Canada Nissan Automatic Transmission Fluid*
Fluid capacity ℓ (US qt, Imp qt)		8.9 (9-3/8, 7-7/8)

*: Refer to MA-10, "RECOMMENDED FLUIDS AND LUBRICANTS" .

Shift Schedule

UCS000S5

VEHICLE SPEED WHEN SHIFTING GEARS THROTTLE POSITION

Throttle position	Shift pattern	Vehicle speed km/h (MPH)					
		$D_1 \rightarrow D_2$	$D_2 \rightarrow D_3$	$D_3 \rightarrow D_4$	$D_4 \rightarrow D_3$	$D_3 \rightarrow D_2$	$D_2 \rightarrow D_1$
Full throttle	Comfort	71 - 79 (44 - 49)	132 - 140 (82 - 87)	202 - 210 (126 - 130)	198 - 206 (123 - 128)	122 - 130 (76 - 81)	51 - 59 (32 - 37)
	Auto power	71 - 79 (44 - 49)	132 - 140 (82 - 87)	202 - 210 (126 - 130)	198 - 206 (123 - 128)	122 - 130 (76 - 81)	51 - 59 (32 - 37)
Half throttle	Comfort	41 - 49 (25 - 30)	74 - 82 (46 - 51)	144 - 152 (89 - 94)	81 - 89 (50 - 55)	43 - 51 (27 - 32)	9 - 17 (6 - 11)
	Auto power	48 - 56 (30 - 35)	91 - 99 (57 - 62)	144 - 152 (89 - 94)	81 - 89 (50 - 55)	49 - 57 (30 - 35)	9 - 17 (6 - 11)

VEHICLE SPEED WHEN PERFORMING AND RELEASING LOCK-UP

Throttle position	Overdrive control switch [Shift position]	Vehicle speed km/h (MPH)	
		Lock-up “ON”	Lock-up “OFF”
Closed throttle	ON [D_4]	66 - 74 (41 - 46)	63 - 71 (39 - 44)
	OFF [D_3]	86 - 94 (53 - 58)	83 - 91 (52 - 57)
Half throttle	ON [D_4]	168 - 176 (104 - 109)	116 - 124 (72 - 77)
	OFF [D_3]	86 - 94 (53 - 58)	83 - 91 (52 - 57)

NOTE:

- Closed throttle: Throttle opening is 1/8 or below, and closed throttle position signal is trend OFF.
- Half throttle: Throttle opening is 4/8.
- Perform lock-up inspection after warming up engine.
- Lock-up vehicle speed may vary depending on the driving conditions and circumstances.

Stall Revolution

UCS000S6

Stall revolution rpm	2,500 - 3,050

Line Pressure

UCS000S7

Engine speed rpm	Line pressure kPa (kg/cm^2 , psi)	
	D and L positions	R position
Idle	500 (5.1, 73)	778 (7.9, 113)
Stall	1,223 (12.6, 179)	1,918 (19.6, 278)

Control Valves

UCS000S8

CONTROL VALVE AND PLUG RETURN SPRINGS

Unit: mm (in)

Parts			Item		
			Part No.*	Free length	Outer diameter
Upper body	23	Pilot valve spring	31742-3AX03	38.98 (1.535)	8.9 (0.350)
	7	1-2 accumulator valve spring	31742-3AX00	20.5 (0.807)	6.95 (0.274)
	28	1-2 accumulator piston spring	31742-3AX09	55.66 (2.191)	19.5 (0.768)
	33	1st reducing valve spring	31742-85X05	27.0 (1.063)	7.0 (0.276)
	35	3-2 timing valve spring	31736-01X00	23.0 (0.906)	6.65 (0.262)
	18	Overrun clutch reducing valve spring	31742-80X15	37.5 (1.476)	6.9 (0.272)
	16	Torque converter relief valve spring	31742-80X07	31.0 (1.220)	9.0 (0.354)
	11	Torque converter clutch control valve	31742-85X00	56.98 (2.243)	6.5 (0.256)
	3	Cooler check valve spring	31742-85X01	29.4 (1.157)	6.0 (0.236)
Lower body	15	Pressure regulator valve spring	31742-80X13	45.0 (1.772)	15.0 (0.591)
	20	Overrun clutch control valve spring	31762-80X00	21.7 (0.854)	7.0 (0.276)
	24	Accumulator control valve spring	31742-80X02	22.0 (0.866)	6.5 (0.256)
	29	Shift valve A spring	31762-80X00	21.7 (0.854)	7.0 (0.276)
	32	Shuttle valve spring	31762-41X04	51.0 (2.008)	5.65 (0.222)
	12	Shift valve B spring	31762-80X00	21.7 (0.854)	7.0 (0.276)
	7	Pressure modifier valve spring	31742-80X16	32.0 (1.260)	6.9 (0.272)
	3	Pressure modifier piston spring	31742-41X15	30.5 (1.201)	9.8 (0.386)
	—	Oil cooler relief valve spring	31872-31X00	17.02 (0.670)	8.0 (0.315)

*: Always check with the Parts Department for the latest parts information.

Accumulator

UCS000S9

O-RING

Unit: mm (in)

Accumulator	Part No.*	Inner diameter (Small)	Part No.*	Inner diameter (Large)
Servo release accumulator	31526-41X03	26.9 (1.059)	31526-41X02	44.2 (1.740)
N-D accumulator	31526-31X08	34.6 (1.362)	31672-21X00	39.4 (1.551)

*: Always check with the Parts Department for the latest parts information.

RETURN SPRING

Unit: mm (in)

Accumulator	Part number*	Free length	Outer diameter
Servo release accumulator	31605-85X00	52.5 (2.067)	20.1 (0.791)
N-D accumulator	31605-31X02	43.5 (1.713)	27.0 (1.063)

*: Always check with the Parts Department for the latest parts information.

Clutch and Brakes

UCS000SA

REVERSE CLUTCH

Number of drive plates		2	
Number of driven plates		2	
Drive plate thickness mm (in)	Standard	1.6 (0.063)	
	Allowable limit	1.4 (0.055)	
Driven plate thickness mm (in)	Standard	1.8 (0.070)	
Clearance mm (in)	Standard	0.5 - 0.8 (0.020 - 0.031)	
	Allowable limit	1.2 (0.047)	
Thickness of retaining plates		Thickness mm (in)	Part number*
		6.6 (0.260)	31537-89X00
		6.8 (0.268)	31537-89X01
		7.0 (0.276)	31537-89X02
		7.2 (0.283)	31537-89X03
		7.4 (0.291)	31537-89X04
		7.6 (0.299)	31537-89X05
		7.8 (0.307)	31537-89X06

*: Always check with the Parts Department for the latest parts information.

HIGH CLUTCH

Number of drive plates		5	
Number of driven plates		$8^{*1} + 1^{*2}$	
Drive plate thickness mm (in)	Standard	1.5 (0.059)	
	Allowable limit	1.3 (0.051)	
Driven plate thickness mm (in)	Standard	*1	*2
		1.4 (0.055)	2.0 (0.079)
Clearance mm (in)	Standard	1.8 - 2.2 (0.071 - 0.087)	
	Allowable limit	2.8 (0.110)	
Thickness of retaining plates		Thickness mm (in)	Part number*
		2.8 (0.110)	31537-89X07
		3.0 (0.118)	31537-81X10
		3.2 (0.126)	31537-81X11
		3.4 (0.134)	31537-81X12
		3.6 (0.142)	31537-81X13

*: Always check with the Parts Department for the latest parts information.

FORWARD CLUTCH

Number of drive plates		6	
Number of driven plates		6	
Drive plate thickness mm (in)	Standard	1.6 (0.063)	
	Allowable limit	1.4 (0.055)	
Driven plate thickness mm (in)	Standard	1.8 (0.071)	
Clearance mm (in)	Standard	0.45 - 0.85 (0.0177 - 0.0335)	
	Allowable limit	1.85 (0.0728)	
Thickness of retaining plates		Thickness mm (in)	Part number*
		3.2 (0.126)	31537-80X76
		3.4 (0.134)	31537-80X75
		3.6 (0.142)	31537-80X70
		3.8 (0.150)	31537-80X71
		4.0 (0.157)	31537-80X72
		4.2 (0.165)	31537-80X73
		4.4 (0.173)	31537-80X74

*: Always check with the Parts Department for the latest parts information.

OVERRUN CLUTCH

Number of drive plates		4	
Number of driven plates		4	
Drive plate thickness mm (in)	Standard	1.6 (0.063)	
	Allowable limit	1.4 (0.055)	
Driven plate thickness mm (in)	Standard	1.8 (0.071)	
Clearance mm (in)	Standard	0.7 - 1.1 (0.028 - 0.043)	
	Allowable limit	1.7 (0.067)	
Thickness of retaining plates		Thickness mm (in)	Part number*
		3.0 (0.118)	31537-80X65
		3.2 (0.126)	31537-80X66
		3.4 (0.134)	31537-80X67
		3.6 (0.142)	31537-80X68
		3.8 (0.150)	31537-80X69

*: Always check with the Parts Department for the latest parts information.

LOW & REVERSE BRAKE

Number of drive plates		7	
Number of driven plates		7 + 1	
Drive plate thickness mm (in)	Standard	1.8 (0.071)	
	Allowable limit	1.6 (0.063)	
Driven plate thickness mm (in)	Standard	1.8 (0.071)	
Clearance mm (in)	Standard	1.7 - 2.1 (0.067 - 0.083)	
	Allowable limit	3.3 (0.130)	
Thickness of retaining plates		Thickness mm (in)	Part number*
		2.0 (0.079)	31667-80X00
		2.2 (0.087)	31667-80X01
		2.4 (0.094)	31667-80X02
		2.6 (0.102)	31667-80X03
		2.8 (0.110)	31667-80X04
		3.0 (0.118)	31667-80X05
		3.2 (0.126)	31667-80X06
		3.4 (0.134)	31667-80X07

*: Always check with the Parts Department for the latest parts information.

CLUTCH AND BRAKE RETURN SPRINGS

Unit: mm (in)

Parts	Part number*	Free length	Outer diameter
Reverse clutch (27 pcs)	31505-89X03	28.3 (1.114)	8.0 (0.315)
High clutch (18 pcs)	31505-89X04	20.0 (0.787)	8.3 (0.327)
Forward clutch (Overrun clutch) (22 pcs)	31505-80X02	21.4 (0.843)	10.3 (0.406)
Low & reverse brake (24 pcs)	31505-89X02	21.6 (0.850)	6.6 (0.260)

*: Always check with the Parts Department for the latest parts information.

BRAKE BAND

Anchor end pin tightening torque N-m (kg-m, in-lb)	4.9 (0.50, 43)
Number of returning revolutions for anchor end pin	2.5
Lock nut tightening torque N-m (kg-m, ft-lb)	34 (3.5, 25)

Final Drive

UCS000SB

DIFFERENTIAL SIDE GEAR CLEARANCE

Clearance between side gear and differential case with washer mm (in)	0.1 - 0.2 (0.004 - 0.008)

DIFFERENTIAL SIDE GEAR THRUST WASHERS

Thickness mm (in)	Part number*
0.75 (0.0295)	38424-81X00
0.80 (0.0315)	38424-81X01
0.85 (0.0335)	38424-81X02
0.90 (0.0354)	38424-81X03
0.95 (0.0374)	38424-81X04

*: Always check with the Parts Department for the latest parts information.

DIFFERENTIAL SIDE BEARING PRELOAD ADJUSTING SHIMS

Thickness mm (in)	Part number*
0.48 (0.0189)	31438-80X00
0.52 (0.0205)	31438-80X01
0.56 (0.0220)	31438-80X02
0.60 (0.0236)	31438-80X03
0.64 (0.0252)	31438-80X04
0.68 (0.0268)	31438-80X05
0.72 (0.0283)	31438-80X06
0.76 (0.0299)	31438-80X07
0.80 (0.0315)	31438-80X08
0.84 (0.0331)	31438-80X09
0.88 (0.0346)	31438-80X10
0.92 (0.0362)	31438-80X11

*: Always check with the Parts Department for the latest parts information.

BEARING PRELOAD

Differential side bearing preload mm (in)	0.05 - 0.09 (0.0020 - 0.0035)

TURNING TORQUE

Turning torque of final drive assembly N-m (kg-cm, in-lb)	0.8 - 1.5 (8.0 - 15.7, 7 - 13)

Planetary Carrier and Oil Pump

UCS000SC

PLANETARY CARRIER

Clearance between planetary carrier and pinion washer mm (in)	Standard	0.20 - 0.70 (0.0079 - 0.0276)
	Allowable limit	0.80 (0.0315)

OIL PUMP

Oil pump side clearance mm (in)		0.030 - 0.050 (0.0012 - 0.0020)	
Thickness of inner gears and outer gears		Inner gear	
		Thickness mm (in)	Part number*
		11.99 - 12.0 (0.4720 - 0.4724) 11.98 - 11.99 (0.4717 - 0.4720) 11.97 - 11.98 (0.4713 - 0.4717)	31346-80X00 31346-80X01 31346-80X02
		Outer gear	
		Thickness mm (in)	Part number*
		11.99 - 12.0 (0.4720 - 0.4724) 11.98 - 11.99 (0.4717 - 0.4720) 11.97 - 11.98 (0.4713 - 0.4717)	31347-80X00 31347-80X01 31347-80X02
Clearance between oil pump housing and outer gear mm (in)	Standard	0.111 - 0.181 (0.0044 - 0.0071)	
	Allowable limit	0.181 (0.0071)	
Oil pump cover seal ring clearance mm (in)	Standard	0.1 - 0.25 (0.0039 - 0.0098)	
	Allowable limit	0.25 (0.0098)	

*: Always check with the Parts Department for the latest parts information.

Input Shaft

UCS000SD

SEAL RING CLEARANCE

Input shaft seal ring clearance mm (in)	Standard	0.08 - 0.23 (0.0031 - 0.0091)
	Allowable limit	0.23 (0.0091)

SEAL RING

Outer diameter mm (in)	Inner diameter mm (in)	Width mm (in)	Part number*
26 (1.024)	22.4 (0.882)	1.971 (0.078)	31525-80X02

*: Always check with the Parts Department for the latest parts information.

Reduction Pinion Gear

UCS000SE

TURNING TORQUE

Turning torque of reduction pinion gear N-m (kg-cm, in-lb)	0.05 - 0.39 (0.5 - 4.0, 0.43 - 3.47)

REDUCTION PINION GEAR BEARING ADJUSTING SHIMS

Thickness mm (in)	Part number	Thickness mm (in)	Part number*
4.60 (0.1811)	31439-85X01	5.24 (0.2063)	31439-81X12
4.62 (0.1819)	31439-85X02	5.26 (0.2071)	31439-81X13
4.64 (0.1827)	31439-85X03	5.28 (0.2079)	31439-81X14
4.66 (0.1835)	31439-85X04	5.30 (0.2087)	31439-81X15
4.68 (0.1843)	31439-85X05	5.32 (0.2094)	31439-81X16
4.70 (0.1850)	31439-83X06	5.34 (0.2102)	31439-81X17
4.72 (0.1858)	31439-83X11	5.36 (0.2110)	31439-81X18
4.74 (0.1866)	31439-83X12	5.38 (0.2118)	31439-81X19
4.76 (0.1874)	31439-83X13	5.40 (0.2126)	31439-81X20
4.78 (0.1882)	31439-83X14	5.42 (0.2134)	31439-81X21
4.80 (0.1890)	31439-83X15	5.44 (0.2142)	31439-81X22
4.82 (0.1898)	31439-83X16	5.46 (0.2150)	31439-81X23
4.84 (0.1906)	31439-83X17	5.48 (0.2157)	31439-81X24
4.86 (0.1913)	31439-83X18	5.50 (0.2165)	31439-81X46
4.88 (0.1921)	31439-83X19	5.52 (0.2173)	31439-81X47

Thickness mm (in)	Part number	Thickness mm (in)	Part number*
4.90 (0.1929)	31439-83X20	5.54 (0.2181)	31439-81X48
4.92 (0.1937)	31439-83X21	5.56 (0.2189)	31439-81X49
4.94 (0.1945)	31439-83X22	5.58 (0.2197)	31439-81X60
4.96 (0.1953)	31439-83X23	5.60 (0.2205)	31439-81X61
4.98 (0.1961)	31439-83X24	5.62 (0.2213)	31439-81X62
5.00 (0.1969)	31439-81X00	5.64 (0.2220)	31439-81X63
5.02 (0.1976)	31439-81X01	5.66 (0.2228)	31439-81X64
5.04 (0.1984)	31439-81X02	5.68 (0.2236)	31439-81X65
5.06 (0.1992)	31439-81X03	5.70 (0.2244)	31439-81X66
5.08 (0.2000)	31439-81X04	5.72 (0.2252)	31439-81X67
5.10 (0.2008)	31439-81X05	5.74 (0.2260)	31439-81X68
5.12 (0.2016)	31439-81X06	5.76 (0.2268)	31439-81X69
5.14 (0.2024)	31439-81X07	5.78 (0.2276)	31439-81X70
5.16 (0.2031)	31439-81X08	5.80 (0.2283)	31439-81X71
5.18 (0.2039)	31439-81X09	5.82 (0.2291)	31439-81X72
5.20 (0.2047)	31439-81X10	5.84 (0.2299)	31439-81X73
5.22 (0.2055)	31439-81X11	5.86 (0.2307)	31439-81X74

*: Always check with the Parts Department for the latest parts information.

Band Servo

UCS000SF

RETURN SPRING

Unit: mm (in)

Return spring	Part number*	Free length	Outer diameter
2nd servo return spring	31605-31X20	32.5 (1.280)	25.9 (1.020)
OD servo return spring	31605-80X07	62.6 (2.465)	21.7 (0.854)

*: Always check with the Parts Department for the latest parts information.

Output Shaft

UCS000SG

SEAL RING CLEARANCE

Output shaft seal ring clearance mm (in)	Standard	0.10 - 0.25 (0.0039 - 0.0098)
	Allowable limit	0.25 (0.0098)

SEAL RING

Outer diameter mm (in)	Inner diameter mm (in)	Width mm (in)	Part number*
33.71 (1.327)	30.25 (1.191)	1.95 (0.077)	31525-80X09

*: Always check with the Parts Department for the latest parts information.

END PLAY

Output shaft end play mm (in)	0 - 0.15 (0 - 0.0059)

OUTPUT SHAFT ADJUSTING SHIMS

Thickness mm (in)	Part number*
0.80 (0.0315)	31438-80X60
0.84 (0.0331)	31438-80X61
0.88 (0.0346)	31438-80X62
0.92 (0.0362)	31438-80X63
0.96 (0.0378)	31438-80X64
1.00 (0.0394)	31438-80X65
1.04 (0.0409)	31438-80X66
1.08 (0.0425)	31438-80X67
1.12 (0.0441)	31438-80X68
1.16 (0.0457)	31438-80X69
1.20 (0.0472)	31438-80X70

*: Always check with the Parts Department for the latest parts information.

Bearing Retainer

UCS000SH

SEAL RING CLEARANCE

Bearing retainer seal ring clearance mm (in)	Standard	0.10 - 0.30 (0.0039 - 0.0118)
	Allowable limit	0.30 (0.0118)

Total End Play

UCS000SI

Total end play mm (in)	0.25 - 0.55 (0.0098 - 0.0217)

BEARING RACE FOR ADJUSTING TOTAL END PLAY

Thickness mm (in)	Part number*
0.8 (0.031)	31435-80X00
1.0 (0.039)	31435-80X01
1.2 (0.047)	31435-80X02
1.4 (0.055)	31435-80X03
1.6 (0.063)	31435-80X04
1.8 (0.071)	31435-80X05
2.0 (0.079)	31435-80X06
0.9 (0.035)	31435-80X09
1.1 (0.043)	31435-80X10
1.3 (0.051)	31435-80X11
1.5 (0.059)	31435-80X12
1.7 (0.067)	31435-80X13
1.9 (0.075)	31435-80X14

*: Always check with the Parts Department for the latest parts information.

Reverse Clutch End Play

UCS000SJ

Reverse clutch end play mm (in)	0.61 - 1.00 (0.0240 - 0.0394)

THRUST WASHERS FOR ADJUSTING REVERSE CLUTCH DRUM END PLAY

Thickness mm (in)	Part number*
0.80 (0.0315)	31508-80X13
0.95 (0.0374)	31508-80X14
1.10 (0.0433)	31508-80X15
1.25 (0.0492)	31508-80X16
1.40 (0.0551)	31508-80X17
1.55 (0.0610)	31508-80X18
1.70 (0.0669)	31508-80X19
1.85 (0.0728)	31508-80X20

*: Always check with the Parts Department for the latest parts information.

Removal and Installation

UCS000SK

Unit: mm (in)

Distance between end of converter housing and torque converter	14 (0.55)

Shift Solenoid Valves

UCS000SL

Gear position	1	2	3	4
Shift solenoid valve A	ON (Closed)	OFF (Open)	OFF (Open)	ON (Closed)
Shift solenoid valve B	ON (Closed)	ON (Closed)	OFF (Open)	OFF (Open)

Solenoid Valves

UCS000SM

Solenoid valves	Resistance (Approx.) Ω	Terminal No.
Shift solenoid valve A	20 - 30	2
Shift solenoid valve B	5 - 20	1
Overrun clutch solenoid valve	20 - 30	3
Line pressure solenoid valve	2.5 - 5	4
Torque converter clutch solenoid valve	5 - 20	5

A/T Fluid Temperature Sensor

UCS000SN

Remarks: Specification data are reference values.

Monitor item	Condition	Specification (Approximately)	
A/T fluid temperature sensor	Cold [20°C (68°F)] ↓ Hot [80°C (176°F)]	1.5V ↓ 0.5V	2.5 kΩ ↓ 0.3 kΩ

Revolution Sensor

UCS000SO

Condition	Judgement standard
When moving at 20 km/h (12 MPH), use the CONSULT-II pulse frequency measuring function.*1 **CAUTION:** **Connect the diagnosis data link cable to the vehicle diagnosis connector.** *1: A circuit tester cannot be used to test this item.	450 Hz (Approx.)
When vehicle parks.	0V

Dropping Resistor

UCS000SP

Resistance (Approx.)	12Ω

Turbine Revolution Sensor (Power Train Revolution Sensor)

UCS000SQ

Condition	Judgement standard
When moving at 20 km/h (12 MPH), use the CONSULT-II pulse frequency measuring function.*1 **CAUTION:** **Connect the diagnosis data link cable to the vehicle diagnosis connector.** *1: A circuit tester cannot be used to test this item.	240 Hz (Approx.)
When vehicle parks.	Under 1.3V or over 4.5V

INDEX FOR DTC

PFP:00024

Alphabetical Index

UCS000SR

NOTE:
If DTC U1000 is displayed with other DTCs, first perform the trouble diagnosis for DTC U1000. Refer to AT-452 .

Items (CONSULT-II screen terms)	DTC		Reference page
	OBD-II	Except OBD-II	
	CONSULT-II GST*1	CONSULT-II only "TRANSMISSION"	
A/T 1ST GR FNCTN	P0731	P0731	AT-485
A/T 2ND GR FNCTN	P0732	P0732	AT-488
A/T 3RD GR FNCTN	P0733	P0733	AT-494
A/T 4TH GR FNCTN	P0734	P0734	AT-500
A/T 5TH GR FNCTN	P0735	P0735	AT-505
A/T TCC S/V FNCTN	P0744	P0744	AT-511
ATF TEMP SEN/CIRC	P0710	P0710	AT-465
CAN COMM CIRCUIT	U1000	U1000	AT-452
ELEC TH CONTROL	—	P1726	AT-577
ENG SPD INP PERFOR	—	P0726	AT-483
FLUID TEMP SEN	P0711	P0711	AT-470
GEAR LEVER SWITCH	—	P0825	AT-568
PC SOL A(L/PRESS)	P0745	P0745	AT-514
PC SOL B(SFT/PRS)	P0775	P0775	AT-549
PC SOL C(TCC&SFT)	P0795	P0795	AT-558
PC SOL C STC ON	P0797	P0797	AT-563
PNP SW/CIRC	P0705	P0705	AT-459
SHIFT	P0780	P0780	AT-554
SHIFT SOL A	P0750	P0750	AT-519
SHIFT SOL B	P0755	P0755	AT-524
SHIFT SOL C	P0760	P0760	AT-529
SHIFT SOL D	P0765	P0765	AT-539
SHIFT SOL E	P0770	P0770	AT-544
SFT SOL C STUCK ON	P0762	P0762	AT-534
TCM POWER INPT SIG	P0882	P0882	AT-572
TCM PROCESSOR	—	P0613	AT-457
TURBINE SENSOR	P0717	P0717	AT-475
VEH SPD SE/CIR-MTR	—	P0500	AT-455
VHCL SPEED SEN-A/T	P0722	P0722	AT-479

*1: These numbers are prescribed by SAE J2012.

DTC No. Index

UCS000SS

NOTE:
If DTC U1000 is displayed with other DTCs, first perform the trouble diagnosis for DTC U1000. Refer to AT-452 .

DTC		Items (CONSULT-II screen terms)	Reference page
OBD-II	Except OBD-II		
CONSULT-II GST*1	CONSULT-II only "TRANSMISSION"		
—	P0500	VEH SPD SE/CIR-MTR	AT-455
—	P0613	TCM PROCESSOR	AT-457
P0705	P0705	PNP SW/CIRC	AT-459
P0710	P0710	ATF TEMP SEN/CIRC	AT-465
P0711	P0711	FLUID TEMP SEN	AT-470
P0717	P0717	TURBINE SENSOR	AT-475
P0722	P0722	VHCL SPEED SEN-A/T	AT-479
—	P0726	ENG SPD INP PERFOR	AT-483
P0731	P0731	A/T 1ST GR FNCTN	AT-485
P0732	P0732	A/T 2ND GR FNCTN	AT-488
P0733	P0733	A/T 3RD GR FNCTN	AT-494
P0734	P0734	A/T 4TH GR FNCTN	AT-500
P0735	P0735	A/T 5TH GR FNCTN	AT-505
P0744	P0744	A/T TCC S/V FNCTN	AT-511
P0745	P0745	PC SOL A(L/PRESS)	AT-514
P0750	P0750	SHIFT SOL A	AT-519
P0755	P0755	SHIFT SOL B	AT-524
P0760	P0760	SHIFT SOL C	AT-529
P0762	P0762	SFT SOL C STUCK ON	AT-534
P0765	P0765	SHIFT SOL D	AT-539
P0770	P0770	SHIFT SOL E	AT-544
P0775	P0775	PC SOL B(SFT/PRS)	AT-549
P0780	P0780	SHIFT	AT-554
P0795	P0795	PC SOL C(TCC&SFT)	AT-558
P0797	P0797	PC SOL C STC ON	AT-563
—	P0825	GEAR LEVER SWITCH	AT-568
P0882	P0882	TCM POWER INPT SIG	AT-572
—	P1726	ELEC TH CONTROL	AT-577
U1000	U1000	CAN COMM CIRCUIT	AT-452

*1: These numbers are prescribed by SAE J2012.

PRECAUTIONS

PFP:00001

Precautions for Supplemental Restraint System (SRS) “AIR BAG” and “SEAT BELT PRE-TENSIONER”

UCS000ST

The Supplemental Restraint System such as “AIR BAG” and “SEAT BELT PRE-TENSIONER”, used along with a front seat belt, helps to reduce the risk or severity of injury to the driver and front passenger for certain types of collision. This system includes seat belt switch inputs and dual stage front air bag modules. The SRS system uses the seat belt switches to determine the front air bag deployment, and may only deploy one front air bag, depending on the severity of a collision and whether the front occupants are belted or unbelted.
Information necessary to service the system safely is included in the SRS and SB section of this Service Manual.

WARNING:

- **To avoid rendering the SRS inoperative, which could increase the risk of personal injury or death in the event of a collision which would result in air bag inflation, all maintenance must be performed by an authorized NISSAN/INFINITI dealer.**
- **Improper maintenance, including incorrect removal and installation of the SRS, can lead to personal injury caused by unintentional activation of the system. For removal of Spiral Cable and Air Bag Module, see the SRS section.**
- **Do not use electrical test equipment on any circuit related to the SRS unless instructed to in this Service Manual. SRS wiring harnesses can be identified by yellow and/or orange harnesses or harness connectors.**

Precautions for On Board Diagnostic (OBD) System of A/T and Engine

UCS000SU

The ECM has an on board diagnostic system. It will light up the malfunction indicator lamp (MIL) to warn the driver of a malfunction causing emission deterioration.

CAUTION:

- **Be sure to turn the ignition switch “OFF” and disconnect the negative battery cable before any repair or inspection work. The open/short circuit of related switches, sensors, solenoid valves, etc. will cause the MIL to light up.**
- **Be sure to connect and lock the connectors securely after work. A loose (unlocked) connector will cause the MIL to light up due to an open circuit. (Be sure the connector is free from water, grease, dirt, bent terminals, etc.)**
- **Be sure to route and secure the harnesses properly after work. Interference of the harness with a bracket, etc. may cause the MIL to light up due to a short circuit.**
- **Be sure to connect rubber tubes properly after work. A misconnected or disconnected rubber tube may cause the MIL to light up due to a malfunction of the EGR system or fuel injection system, etc.**
- **Be sure to erase the unnecessary malfunction information (repairs completed) from the TCM and ECM before returning the vehicle to the customer.**

Precautions for A/T Assembly or TCM Replacement

UCS000SV

- When replacing A/T assembly or TCM, refer to the pattern table below and initialize TCM if necessary.

TCM INITIALIZATION PATTERNS

TCM	A/T assembly	Erasing EEPROM in TCM	Remarks
Replaced with new one	Not replaced	Not required	Not required because the EEPROM in TCM is in the default state.
	Replaced with new or old one		
Not replaced	Replaced with new or old one	Required	Required because data connot be conformed to previous data written in the EEPROM in TCM.
Replaced with old one	Not replaced		
	Replaced with new or old one		

NOTE:
"Old one" is the TCM or A/T assembly that has been used on other vehicles.

METHOD FOR TCM INITIALIZATION

1. Perform "CONSULT-II SETTING PROCEDURE". Refer to AT-443, "CONSULT-II SETTING PROCEDURE" .
2. Set the vehicle following the items listed below.
   - Ignition switch "ON".
   - Selector lever "P" or "N" position.
   - Engine not running.
   - Vehicle speed is 0km/h (0 MPH).
   - Ignition voltage is more than 10.5V.
   - Malfunction was not detected.
3. Touch "WORK SUPPORT".
4. Touch "INITIALIZATION".
5. Initialize TCM following the direction in display.

Precautions

UCS000SW

NOTE:
Do not remove or disassemble any RE5F22A model transaxle parts unless specified to do so in AT section.

- **Before connecting or disconnecting the TCM harness connector, turn ignition switch "OFF" and disconnect negative battery cable. Because battery voltage is applied to TCM even if ignition switch is turned "OFF".**

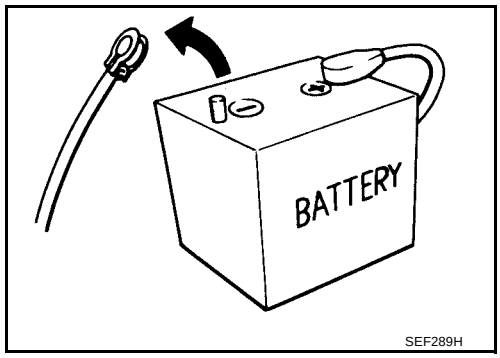

- **When connecting or disconnecting pin connectors into or from TCM, take care not to damage pin terminals (bend or break).**
  Make sure that there are not any bends or breaks on TCM pin terminal, when connecting pin connectors.

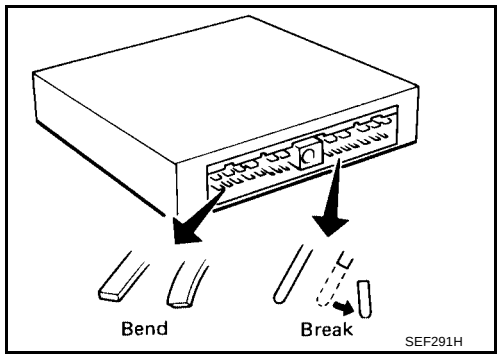

- **Before replacing TCM, perform TCM input/output signal inspection and make sure whether TCM functions properly or not.** **AT-440, "TCM INSPECTION TABLE"**.

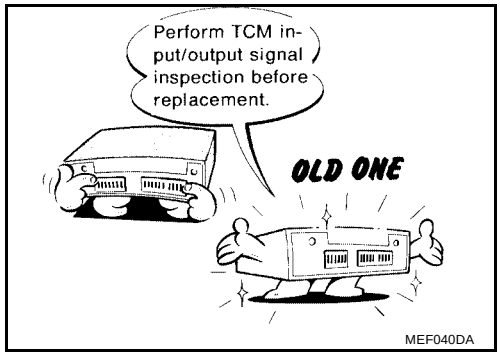

- **After performing each TROUBLE DIAGNOSIS, perform "DTC (Diagnostic Trouble Code) CONFIRMATION PROCEDURE".**
  The DTC should not be displayed in the "DTC CONFIRMATION PROCEDURE" if the repair is completed.

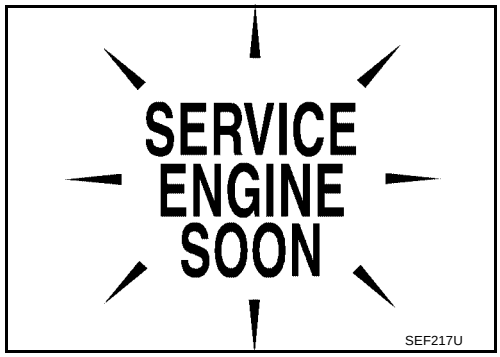

- Always use the specified brand of A/T fluid. Refer to MA-10, "Fluids and Lubricants" .
- Use paper rags not cloth rags during work.
- After replacing the A/T fluid, dispose of the waste oil using the methods prescribed by law, ordinance, etc.

- Before proceeding with disassembly, thoroughly clean the outside of the transaxle. It is important to prevent the internal parts from becoming contaminated by dirt or other foreign matter.
- Disassembly should be done in a clean work area.
- Use lint-free cloth or towels for wiping parts clean. Common shop rags can leave fibers that could interfere with the operation of the transaxle.
- Place disassembled parts in order for easier and proper assembly.
- All parts should be carefully cleaned with a general purpose, non-flammable solvent before inspection or reassembly.
- Gaskets, seals and O-rings should be replaced any time the transaxle is disassembled.
- It is very important to perform functional tests whenever they are indicated.
- The valve body contains precision parts and requires extreme care when parts are removed and serviced. Place disassembled valve body parts in order for easier and proper assembly. Care will also prevent springs and small parts from becoming scattered or lost.
- Properly installed valves, sleeves, plugs, etc. will slide along bores in valve body under their own weight.
- Before assembly, apply a coat of recommended ATF to all parts. Apply petroleum jelly to protect O-rings and seals, or hold bearings and washers in place during assembly. Do not use grease.
- Extreme care should be taken to avoid damage to O-rings, seals and gaskets when assembling.
- After overhaul, refill the transaxle with new ATF.
- When the A/T drain plug is removed, only some of the fluid is drained. Old A/T fluid will remain in torque converter and ATF cooling system.
  Always follow the procedures under “Changing A/T Fluid” in the AT section when changing A/T fluid. Refer to AT-383, "Changing A/T Fluid" , AT-383, "Checking A/T Fluid" .

Service Notice or Precautions

UCS000SX

INFORMATION OF SERIAL NUMBER

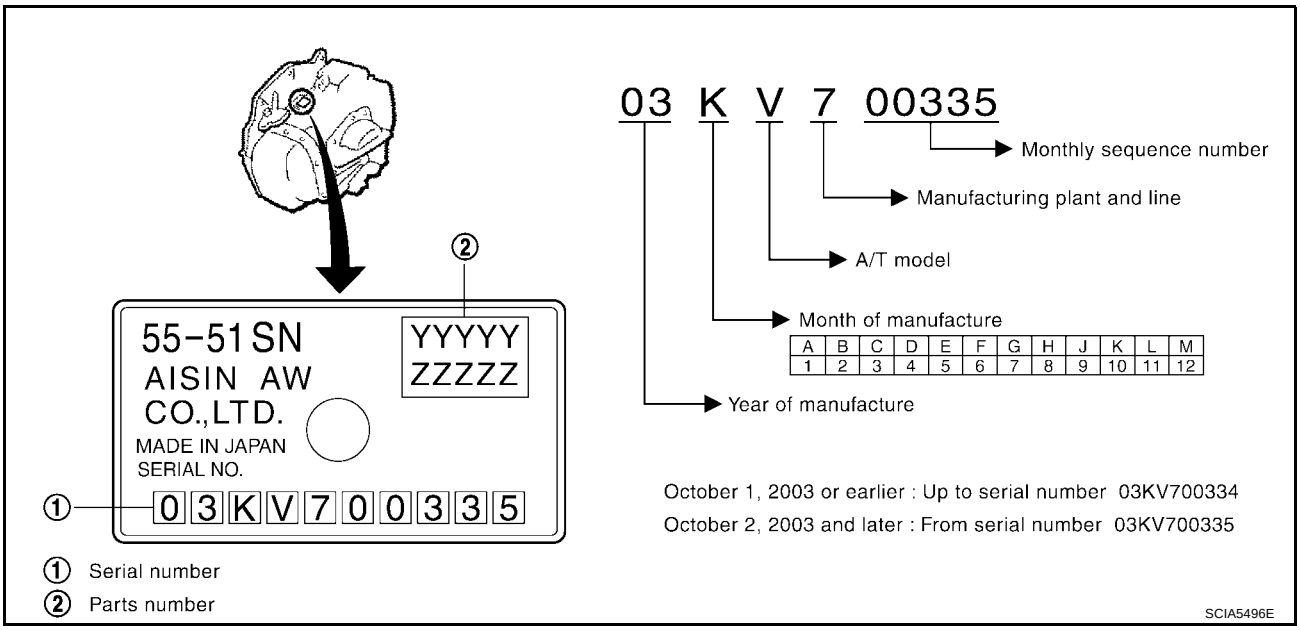

ATF COOLER SERVICE

If A/T fluid contains frictional material (clutches, bands, etc.), or if an A/T is repaired, overhauled, or replaced, inspect and clean the A/T fluid cooler mounted in the radiator or replace the radiator. Flush cooler lines using cleaning solvent and compressed air after repair. For A/T fluid cooler cleaning procedure, refer to AT-383, "A/T Fluid Cooler Cleaning" . For radiator replacement, refer to CO-11, "RADIATOR" .

OBD-II SELF-DIAGNOSIS

- A/T self-diagnosis is performed by the TCM in combination with the ECM. The results can be read through the blinking pattern of the O/D OFF indicator or the malfunction indicator lamp (MIL). Refer to the table on AT-443, "SELF-DIAG RESULT MODE" for the indicator used to display each self-diagnostic result.
- The self-diagnostic results indicated by the MIL are automatically stored in both the ECM and TCM memories.

Always perform the procedure on AT-409, "HOW TO ERASE DTC" to complete the repair and avoid unnecessary blinking of the MIL.

- For details of OBD-II, refer to EC-54, "ON BOARD DIAGNOSTIC (OBD) SYSTEM" .
- **Certain systems and components, especially those related to OBD, may use the new style slide-locking type harness connector. For description and how to disconnect, refer to PG-64, "HARNESS CONNECTOR" .**

Wiring Diagrams and Trouble Diagnosis

UCS000SY

When you read wiring diagrams, refer to the following:

- GI-12, "How to Read Wiring Diagrams".
- PG-4, "POWER SUPPLY ROUTING CIRCUIT" for power distribution circuit.

When you perform trouble diagnosis, refer to the following:

- GI-9, "How to Follow Trouble Diagnoses".
- GI-25, "How to Perform Efficient Diagnosis for an Electrical Incident".

PREPARATION

PFP:00002

Special Service Tools

UCS002LA

The actual shapes of Kent-Moore tools may differ from those of special service tools illustrated here.

Tool number (Kent-Moore No.) Tool name	Description
(J-34301-C) Oil pressure gauge set 1 (J-34301-1) Oil pressure gauge 2 (J-34301-2) Hoses 3 (J-34298) Adapter 4 (J-34282-2) Adapter 5 (790-301-1230-A) 60° Adapter 6 (J-34301-15) Square socket 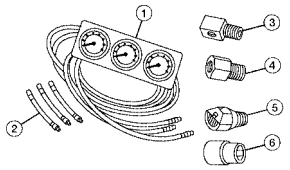 AAT896	Measuring line pressure
(J-45542) Adapter 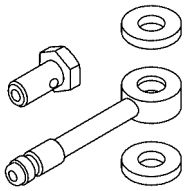 SCIA3019E	Measuring line pressure
(J-45404) Alignment tool 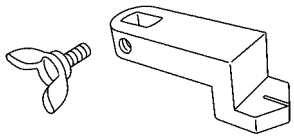 SCIA3018E	Adjusting park/neutral position (PNP) switch
ST33290001 (J-34286) Puller 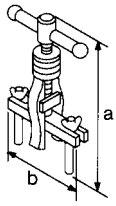 NT414	● Removing oil pump assembly ● Removing thrust roller bearing **a:250 mm(9.84 in)** **b:160 mm(6.30 in)**
ST33400001 (J-26082) Drift 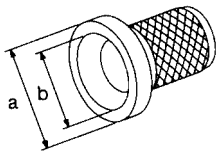 NT086	Installing differential side oil seals **a:60 mm(2.36 in) dia.** **b:74 mm(1.85 in) dia.**
KV31102400 (J-34285 and J-34285-87) Clutch spring compressor 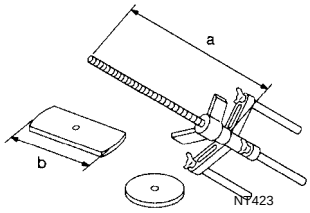 NT423	Removing and installing return springs **a:320 mm(12.60 in)** **b:174 mm(6.85 in)**

Tool number (Kent-Moore No.) Tool name	Description
ST30720000 (J-25405) Drift 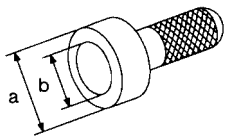 NT115	● Installing oil seal ● Installing thrust roller bearing **a:77 mm(3.03 in) dia.** **b:55.5 mm(2.185 in) dia.**
ST30612000 (J-25742-2) Drift 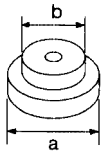 NT073	Removing outer race and adjust shim **a:62 mm(2.44 in) dia.** **b:40 mm(1.57 in) dia.**
ST3127S000 (J-25765-A) Preload gauge 1 GG91030000 (J-25765-A) Torque wrench 2 HT62940000 (—) Socket adapter 3 HT62900000 (—) Socket adapter 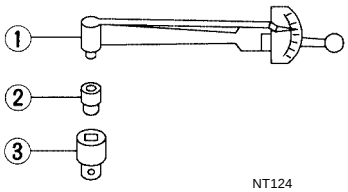 NT124	Checking differential side bearing preload
KV40102500 (J-28815) Drift 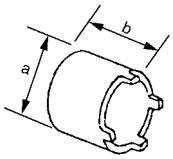 SCIA5517E	**a:60 mm(2.362 in) dia.** **b:45 mm(1.772 in)**
ST33061000 (J-8107-2) Drift 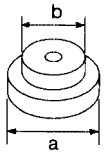 NT073	● Removing tapered roller bearing ● Installing manual valve oil seal **a:38 mm(1.496 in) dia.** **b:28.5 mm(1.122 in) dia.**
KV38100500 (—) Drift 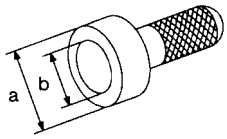 NT115	Installing tapered roller bearing **a:80 mm(3.15 in) dia.** **b:60 mm(2.362 in) dia.**

Tool number (Kent-Moore No.) Tool name	Description
KV40100621 (J-25273) Drift 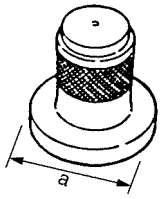 SCIA5518E	Installing outer race and adjust shim **a:76 mm(2.992 in) dia.**
ST30022000 (—) Drift 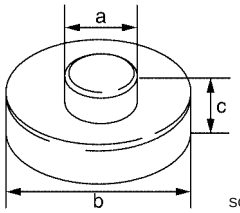 SCIA5519E	**a:56 mm(2.205 in) dia.** **b:110 mm(4.331 in) dia.** **c:15 mm(0.591 in)**

Commercial Service Tools

UCS002LB

Tool name	Description
Power tool 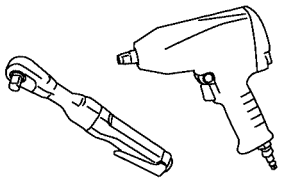 PBIC0190E	Loosening bolts and nuts
Puller 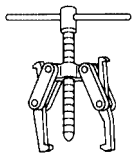 NT077	Removing tapered roller bearing
Puller 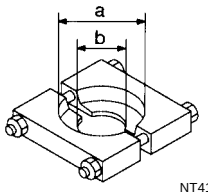 NT411	**a:60 mm(2.36 in) dia.** **b:35 mm(1.38 in) dia.**

A/T FLUID

PFP:KLE40

Changing A/T Fluid

UCS000T1

Refer to MA-23, "Changing A/T Fluid" .

Checking A/T Fluid

UCS000T2

Refer to MA-21, "Checking A/T Fluid" .

A/T Fluid Cooler Cleaning

UCS001EQ

Whenever an automatic transaxle is repaired, overhauled, or replaced, the A/T fluid cooler mounted in the radiator must be inspected and cleaned.
Metal debris and friction material, if present, can become trapped in the A/T fluid cooler. This debris can contaminate the newly serviced A/T or, in severe cases, can block or restrict the flow of A/T fluid. In either case, malfunction of the newly serviced A/T may result.
Debris, if present, may build up as A/T fluid enters the cooler inlet. It will be necessary to back flush the cooler through the cooler outlet in order to flush out any built up debris.

A/T FLUID COOLER CLEANING PROCEDURE

1. Position an oil pan under the automatic transaxle's inlet and outlet cooler hoses.
2. Identify the inlet and outlet fluid cooler hoses.
3. Disconnect the fluid cooler inlet and outlet rubber hoses from the steel cooler tubes or bypass valve.

   NOTE:
   Replace the cooler hoses if rubber material from the hose remains on the tube fitting.
4. Allow any A/T fluid that remains in the cooler hoses to drain into the oil pan.

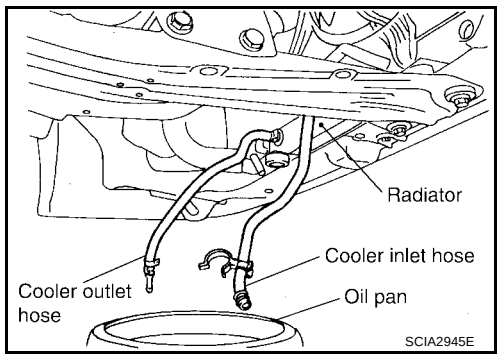

5. Insert the extension adapter hose of a can of Transmission Cooler Cleaner (Nissan P/N 999MP-AM006) into the cooler outlet hose.

   CAUTION:
   - **Wear safety glasses and rubber gloves when spraying the Transmission Cooler Cleaner.**
   - **Spray cooler cleaner only with adequate ventilation.**
   - **Avoid contact with eyes and skin.**
   - **Do not breath vapors or spray mist.**
6. Hold the hose and can as high as possible and spray Transmission Cooler Cleaner in a continuous stream into the cooler outlet hose until fluid flows out of the cooler inlet hose for 5 seconds.

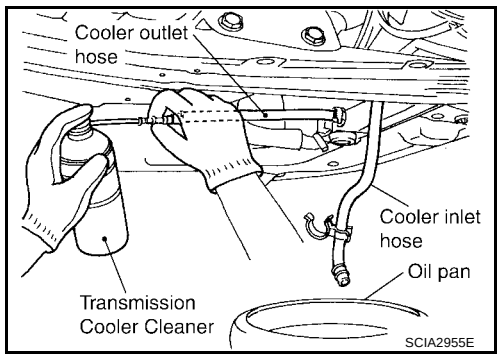

7. Insert the tip of an air gun into the end of the cooler outlet hose.
8. Wrap a shop rag around the air gun tip and of the cooler outlet hose.

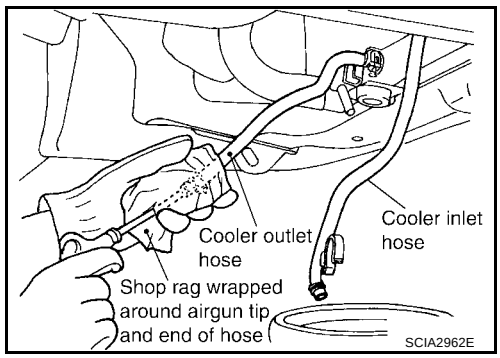

9. Blow compressed air regulated to 5 - 9 kg/cm^2 (70 - 130 psi) through the cooler outlet hose for 10 seconds to force out any remaining fluid.
10. Repeat steps 5 through 9 three additional times.
11. Position an oil pan under the banjo bolts that connect the fluid cooler steel lines to the transaxle.
12. Remove the banjo bolts.
13. Flush each steel line from the cooler side back toward the transaxle by spraying Transmission Cooler Cleaner in a continuous stream for 5 seconds.
14. Blow compressed air regulated to 5 - 9 kg/cm^2 (70 - 130 psi) through each steel line from the cooler side back toward the transaxle for 10 seconds to force out any remaining fluid.
15. Ensure all debris is removed from the steel cooler lines.
16. Ensure all debris is removed from the banjo bolts and fittings.
17. Perform AT-384, "A/T FLUID COOLER DIAGNOSIS PROCEDURE" .

A/T FLUID COOLER DIAGNOSIS PROCEDURE

NOTE:

Insufficient cleaning of the cooler inlet hose exterior may lead to inaccurate debris identification.

1. Position an oil pan under the automatic transaxle's inlet and outlet cooler hoses.
2. Clean the exterior and tip of the cooler inlet hose.
3. Insert the extension adapter hose of a can of Transmission Cooler Cleaner (Nissan P/N 999MP-AM006) into the cooler outlet hose.

   CAUTION:
   - **Wear safety glasses and rubber gloves when spraying the Transmission Cooler Cleaner.**
   - **Spray cooler cleaner only with adequate ventilation.**
   - **Avoid contact with eyes and skin.**
   - **Do not breath vapors or spray mist.**

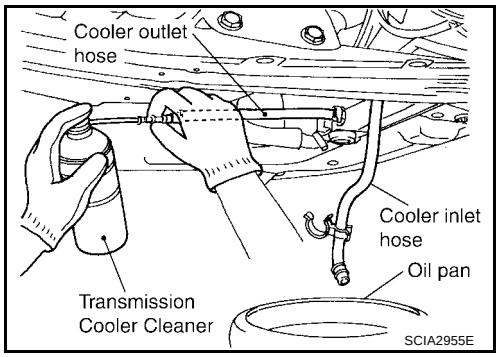

4. Hold the hose and can as high as possible and spray Transmission Cooler Cleaner in a continuous stream into the cooler outlet hose until fluid flows out of the cooler inlet hose for 5 seconds.
5. Tie a common white, basket-type coffee filter to the end of the cooler inlet hose.

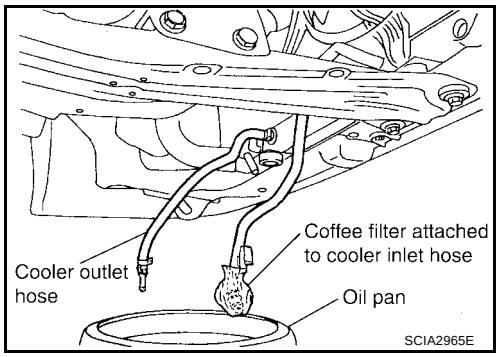

6. Insert the tip of an air gun into the end of the cooler outlet hose.
7. Wrap a shop rag around the air gun tip and end of cooler outlet hose.
8. Blow compressed air regulated to 5 - 9 kg/cm^2 (70 - 130 psi) through the cooler outlet hose to force any remaining A/T fluid into the coffee filter.
9. Remove the coffee filter from the end of the cooler inlet hose.
10. Perform AT-385, "A/T FLUID COOLER INSPECTION PROCEDURE" .

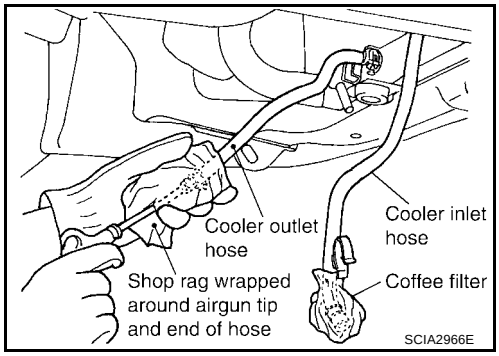

A/T FLUID COOLER INSPECTION PROCEDURE

1. Inspect the coffee filter for debris.

a. If small metal debris less than 1mm (0.040 in) in size or metal powder is found in the coffee filter, this is normal. If normal debris is found, the A/T fluid cooler/radiator can be re-used and the procedure is ended.

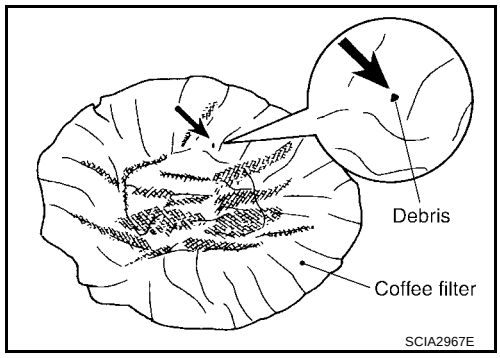

b. If one or more pieces of debris are found that are over 1mm (0.040in) in size and/or peeled clutch facing material is found in the coffee filter, the fluid cooler is not serviceable. The radiator/ fluid cooler must be replaced and the inspection procedure is ended.

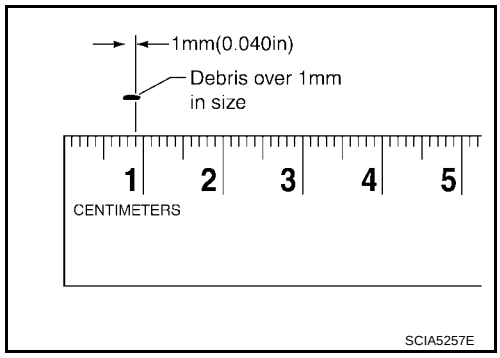

A/T FLUID COOLER FINAL INSPECTION

After performing all procedures, ensure that all remaining oil is cleaned from all components.

A/T CONTROL SYSTEM

PFP:31036

Cross-Sectional View

UCS001E5

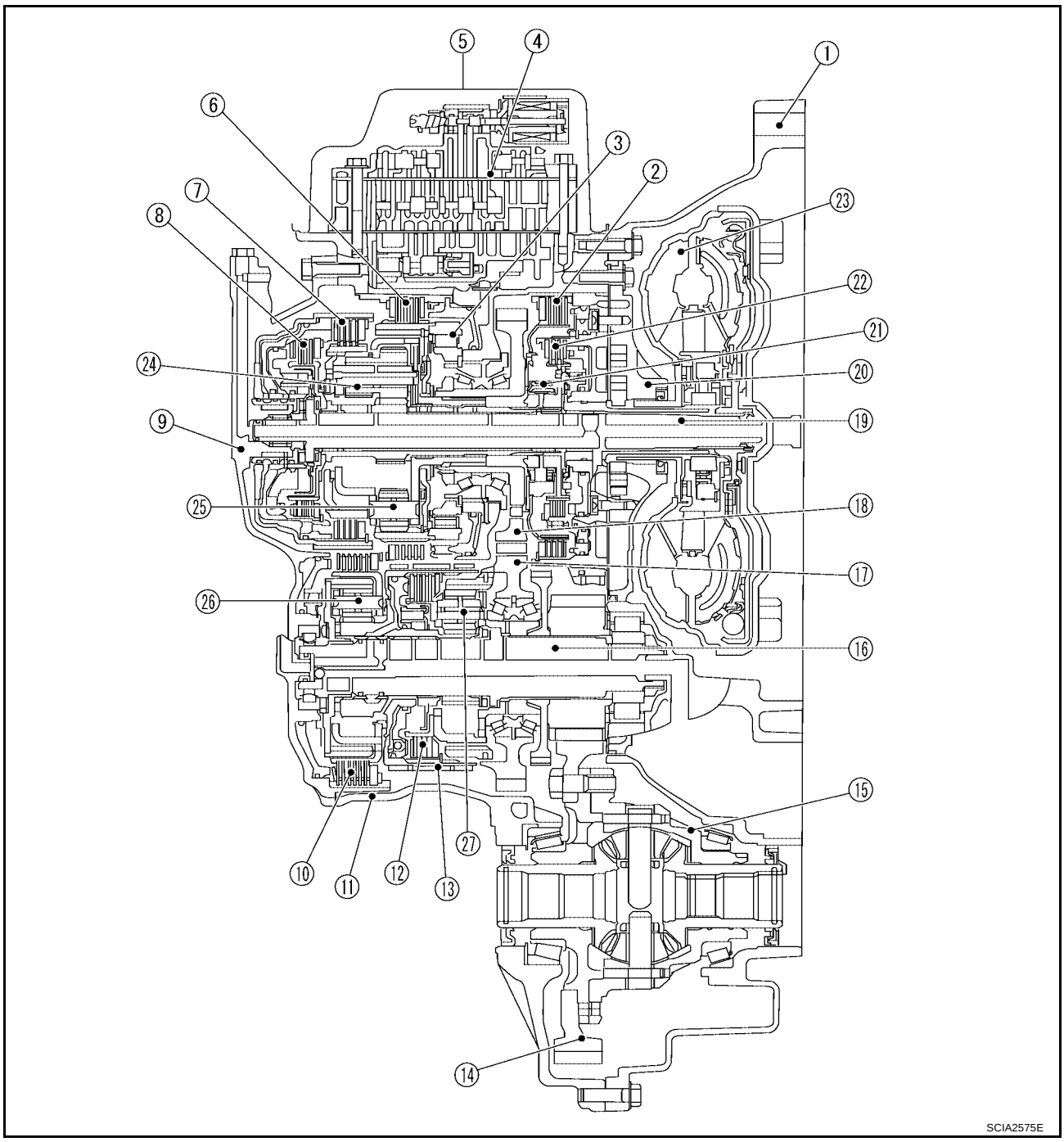

1.	Converter housing	2.	2nd brake	3.	One-way clutch No. 2
4.	Control valve assembly	5.	Side cover	6.	1st and reverse brake
7.	Forward clutch	8.	Direct clutch	9.	Transaxle case cover
10.	B5 brake	11.	Transaxle case	12.	U/D clutch
13.	U/D brake	14.	Final gear	15.	Differential case
16.	Output shaft	17.	Counter driven gear	18.	Counter drive gear
19.	Input shaft	20.	Oil pump	21.	One-way clutch No. 1
22.	2nd coast brake	23.	Torque converter	24.	Main rear planetary gear
25.	Main front planetary gear	26.	U/D rear planetary gear	27.	U/D front planetary gear

Shift Mechanism

UCS001E6

CONSTRUCTION

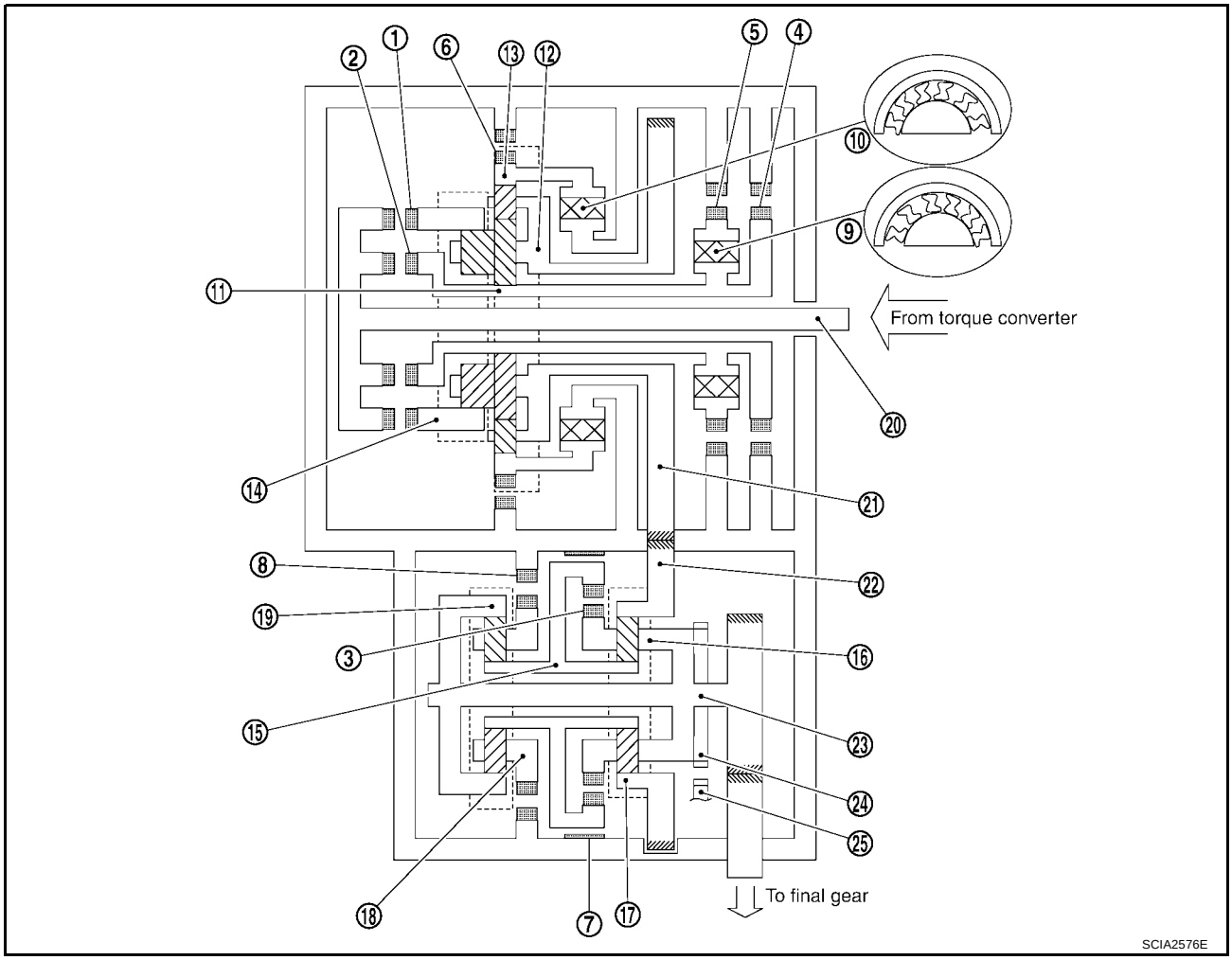

1. Forward clutch	2. Direct clutch	3. U/D clutch
4. 2nd coast brake	5. 2nd brake	6. 1st and reverse brake
7. U/D brake	8. B5 brake	9. One-way clutch No. 1
10. One-way clutch No. 2	11. Main sun gear	12. Main planetary carrier
13. Main front internal gear	14. Main rear internal gear	15. U/D sun gear
16. U/D front planetary carrier	17. U/D front internal gear	18. U/D rear planetary carrier
19. U/D rear internal gear	20. Input shaft	21. Counter drive gear
22. Counter driven gear	23. Output shaft	24. Parking gear
25. Parking pawl		

FUNCTION OF CLUTCH AND BRAKE

Clutch and brake components	Abbr.	Function
Forward clutch **1**	F/C	Connect input shaft **20** to main rear internal gear **10** .
Direct clutch **2**	D/C	Connect input shaft **20** to main sun gear **11** .
U/D clutch **3**	U/D.C	Connect U/D sun gear **15** to U/D front planetary carrier **16** .
2nd coast brake **4**	2nd C/B	Lock main sun gear **11** .
2nd brake **5**	2nd/B	Lock counterclockwise rotation of main sun gear **11** .
1st and reverse brake **6**	1st & R/B	Lock main front internal gear **13** .
U/D brake **7**	U/D.B	Lock U/D sun gear **15** .
B5 brake **8**	B5/B	Lock U/D rear planetary carrier **18** .
One-way clutch No. 1 **9**	O.C1	Lock counterclockwise rotation of main sun gear **11** , when 2nd brake **5** operations.
One-way clutch No. 2 **10**	O.C2	Lock counterclockwise rotation of main front internal gear **13** .

CLUTCH AND BAND CHART

Shift position		Clutch			Brake					One-way clutch		Remarks
		F/C **1**	D/C **2**	U/D.C **3**	2nd C/B **4**	2nd/B **5**	1st & R/B **6**	U/D.B **7**	B5/B **8**	O.C1 **9**	O.C2 **10**	
P									○			PARK POSITION
R			○				○		○			REVERSE POSITION
N									○			NEUTRAL POSITION
D*1	1st	○							○		○	Automatic shift 1 ⇔ 2 ⇔ 3 ⇔ 4 ⇔ 5
	1 ⇔ 2	○			△	△			○	△	△	
	2nd	○			○	○			○	○		
	2 ⇔ 3	○			○	○		△	△	○		
	3rd	○			○	○		○		○		
	3 ⇔ 4	○		△	○	○		△		○		
	4th	○		○	○	○				○		
	4 ⇔ 5	○	△	○	△	○				△		
	5th	○	○	○		○						
L*2	1st	○							○		○	Automatic shift 1 ⇔ 2 ⇔ 3
	1 ⇔ 2	○			△	△			○	△	△	
	2nd	○			○	○			○	○		
	2 ⇔ 3	○			○	○		△	△	○		
	3rd	○			○	○		○		○		

○: Operates

△: In transition between applied and released.

*1: A/T will not shift to 5th when lever switch is pushed (indicated A/T indicator “4”).

*2: A/T will not shift to 3th when lever switch is pushed (indicated A/T indicator “2”).

NOTE:

When shifting D to L position or lever switch pushes (indicated A/T indicator “4” at D position or “2” at L position), down shift permission control is activated. Refer to AT-405, "Down Shift Permission Control" .

POWER TRANSMISSION

"N" position

Since both the forward clutch and the direct clutch are released, torque from the input shaft drive is not transmitted to the output shaft.

"P" position

- The same as for the "N" position, both the forward clutch and the direct clutch are released, so torque from the input shaft drive is not transmitted to the output shaft.
- The parking pole linked with the selector lever meshes with the parking gear and fastens the output shaft mechanically.

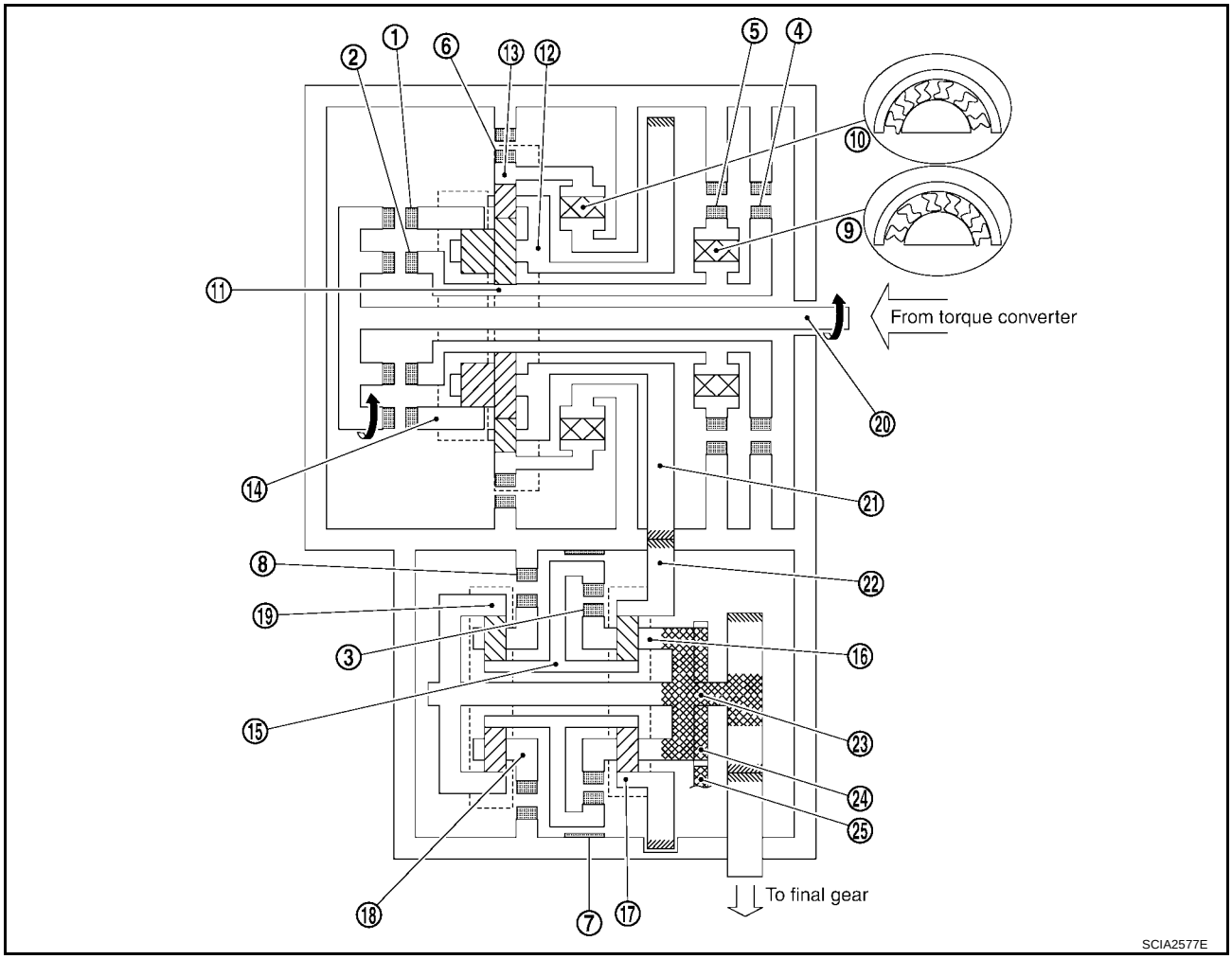

1. Forward clutch	2. Direct clutch	3. U/D clutch
4. 2nd coast brake	5. 2nd brake	6. 1st and reverse brake
7. U/D brake	8. B5 brake	9. One-way clutch No. 1
10. One-way clutch No. 2	11. Main sun gear	12. Main planetary carrier
13. Main front internal gear	14. Main rear internal gear	15. U/D sun gear
16. U/D front planetary carrier	17. U/D front internal gear	18. U/D rear planetary carrier
19. U/D rear internal gear	20. Input shaft	21. Counter drive gear
22. Counter driven gear	23. Output shaft	24. Parking gear
25. Parking pawl		

“D”, “L” positions 1st gear

1. Input shaft rotates clockwise.
2. Forward clutch operates. (Connect input shaft to main rear internal gear.)
3. Main rear internal gear rotates clockwise.
4. Main rear planetary pinion gear rotates itself clockwise.
5. Main front large planetary pinion gear rotates itself clockwise for rear planetary pinion and one.
6. Main front small planetary pinion gear rotates itself counterclockwise.
7. Main front internal gear is going to rotates counterclockwise.
8. One-way clutch No. 2 operates. (Lock counterclockwise rotation of main front internal gear.)
9. Main planetary carrier revolves clockwise due to reaction force of front small planetary pinion gear.
10. Counter drive gear rotates clockwise for main planetary carrier and one.
11. Counter driven gear rotates counterclockwise.
12. U/D front internal gear rotates counterclockwise for counter driven gear and one.
13. U/D front planetary pinion gear rotates itself counterclockwise.
14. U/D sun gear rotates clockwise.
15. U/D rear planetary pinion gear rotates itself counterclockwise.
16. B5 brake operate. (Lock rotation of U/D rear planetary carrier.)
17. U/D rear internal gear rotates counterclockwise.
18. U/D front planetary carrier and output shaft rotates counterclockwise for U/D rear internal gear and one.
19. Final gear clockwise.

- During deceleration, main front internal gear clockwise due to rotation itself clockwise of main front small planetary pinion gear, but driving force loses due to free of one-way clutch No. 2. Therefore, engine brake does not operate.

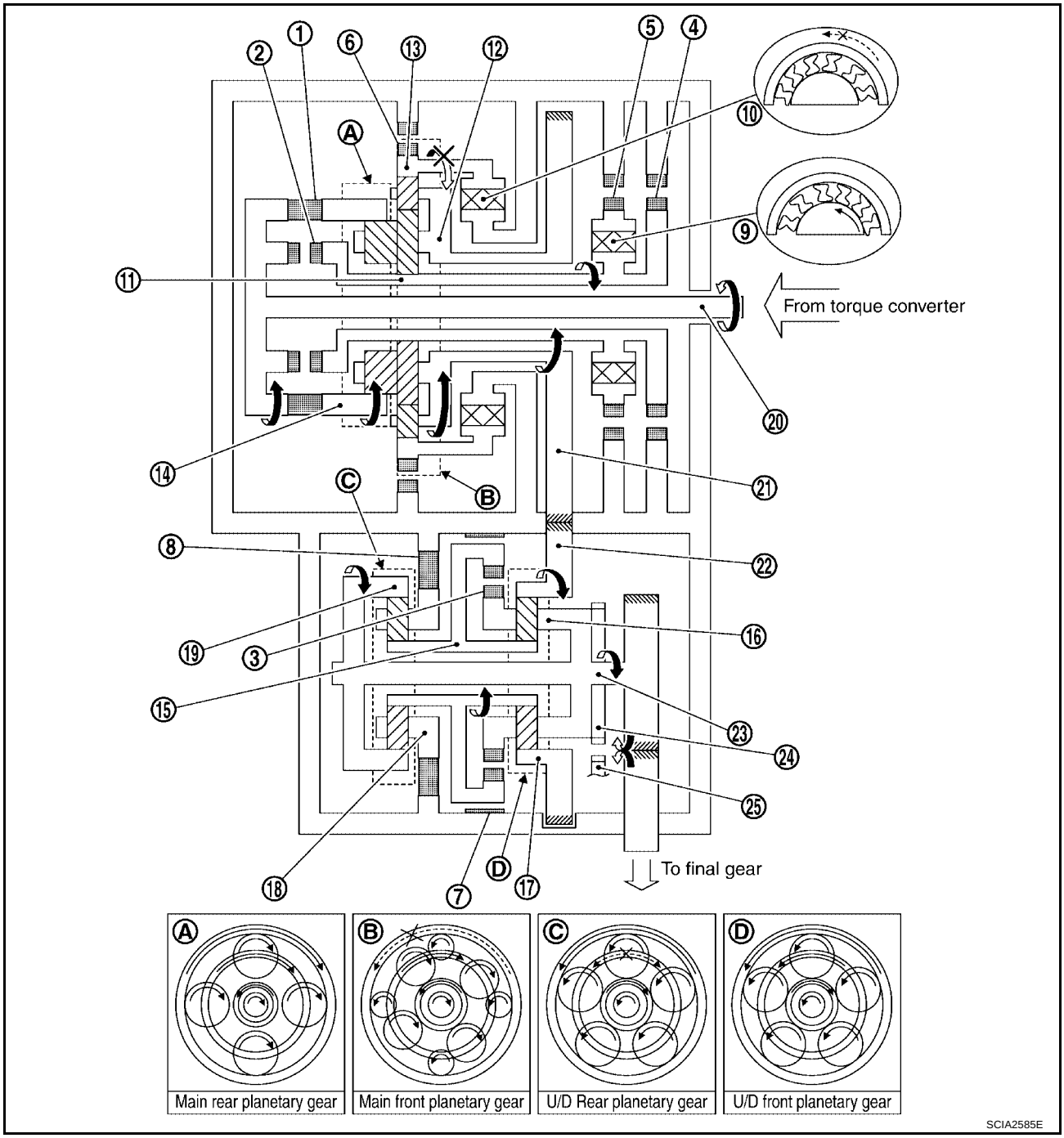

1. Forward clutch
2. Direct clutch
3. U/D clutch
4. 2nd coast brake
5. 2nd brake
6. 1st and reverse brake
7. U/D brake
8. B5 brake
9. One-way clutch No. 1
10. One-way clutch No. 2
11. Main sun gear
12. Main planetary carrier
13. Main front internal gear
14. Main rear internal gear
15. U/D sun gear
16. U/D front planetary carrier
17. U/D front internal gear
18. U/D rear planetary carrier
19. U/D rear internal gear
20. Input shaft
21. Counter drive gear
22. Counter driven gear
23. Output shaft
24. Parking gear
25. Parking pawl

“D”, “L” positions 2nd gear

1. Input shaft rotates clockwise.
2. Forward clutch operates. (Connect input shaft to main rear internal gear.)
3. Main rear internal gear rotates clockwise.
4. Main rear planetary pinion gear rotates itself clockwise.
5. Main front large planetary pinion gear rotates itself clockwise for rear planetary pinion and one.
6. 2nd brake and 2nd coast brake operates.
7. One-way clutch No. 1 operates. (Lock rotation of main sun gear.)
8. Main planetary carrier revolves clockwise due to reaction force of front large planetary pinion gear.
9. Counter drive gear rotates clockwise for main planetary carrier and one.
10. Counter driven gear rotates counterclockwise.
11. U/D front internal gear rotates counterclockwise for counter driven gear and one.
12. U/D front planetary pinion gear rotates itself counterclockwise.
13. U/D sun gear rotates clockwise.
14. U/D rear planetary pinion gear rotates itself counterclockwise.
15. B5 brake operate. (Lock rotation of U/D rear planetary carrier.)
16. U/D rear internal gear rotates counterclockwise.
17. U/D front planetary carrier and output shaft rotates counterclockwise for U/D rear internal gear and one.
18. Final gear clockwise.

- During deceleration, driving force is connected to input shaft directly without one-way clutch. Therefore, engine brake operates.

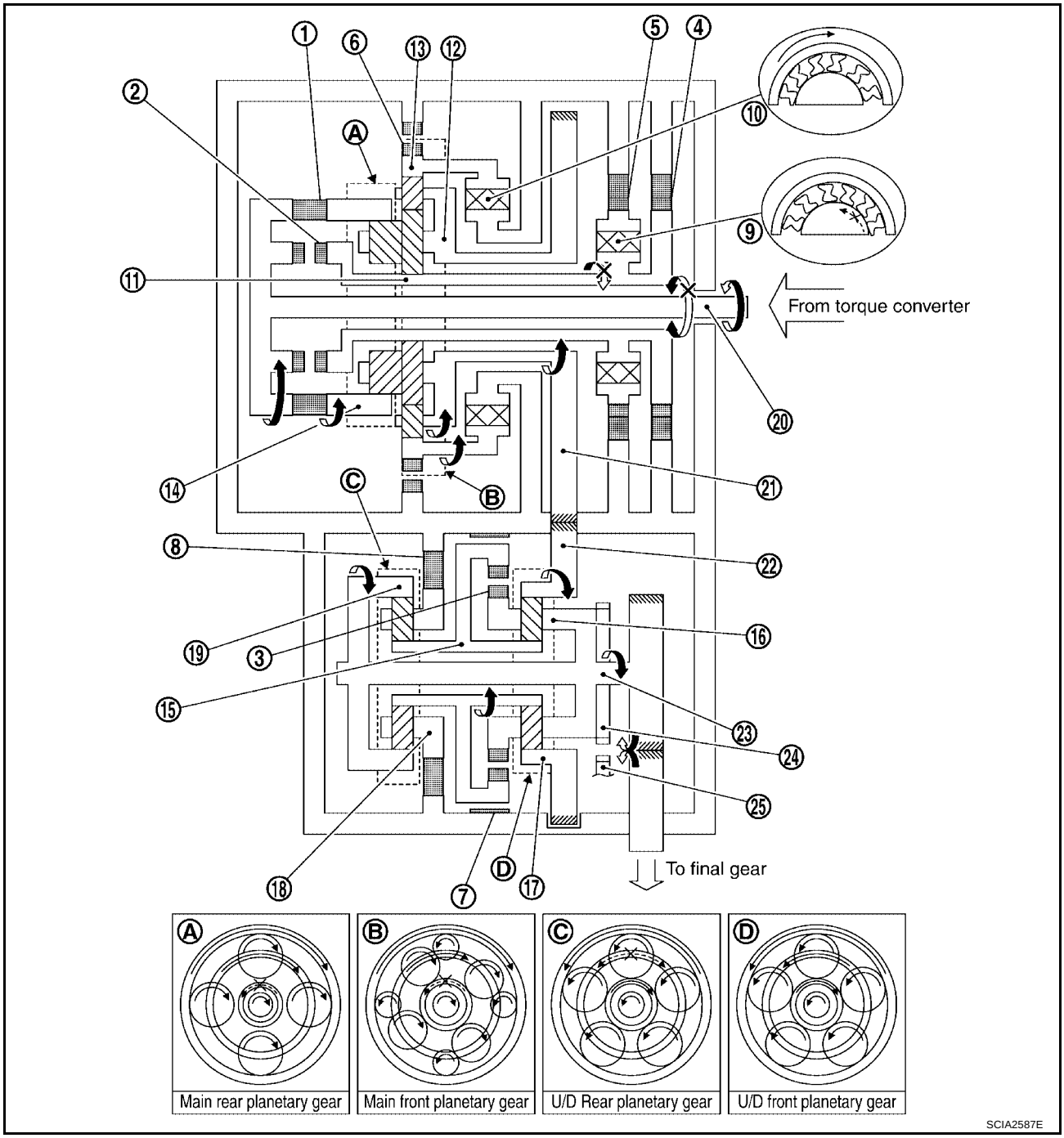

1. Forward clutch
2. Direct clutch
3. U/D clutch
4. 2nd coast brake
5. 2nd brake
6. 1st and reverse brake
7. U/D brake
8. B5 brake
9. One-way clutch No. 1
10. One-way clutch No. 2
11. Main sun gear
12. Main planetary carrier
13. Main front internal gear
14. Main rear internal gear
15. U/D sun gear
16. U/D front planetary carrier
17. U/D front internal gear
18. U/D rear planetary carrier
19. U/D rear internal gear
20. Input shaft
21. Counter drive gear
22. Counter driven gear
23. Output shaft
24. Parking gear
25. Parking pawl

“D”, “L” positions 3rd gear

1. Input shaft rotates clockwise.
2. Forward clutch operates. (Connect input shaft to main rear internal gear.)
3. Main rear internal gear rotates clockwise.
4. Main rear planetary pinion gear rotates itself clockwise.
5. Main front large planetary pinion gear rotates itself clockwise for rear planetary pinion and one.
6. 2nd brake and 2nd coast brake operates.
7. One-way clutch No. 1 operates. (Lock rotation of main sun gear.)
8. Main planetary carrier revolves clockwise due to reaction force of front large planetary pinion gear.
9. Counter drive gear rotates clockwise for main planetary carrier and one.
10. Counter driven gear rotates counterclockwise.
11. U/D front internal gear rotates counterclockwise for counter driven gear and one.
12. U/D front planetary pinion gear rotates itself counterclockwise.
13. U/D brake operate. (Lock rotation of U/D sun gear.)
14. U/D front planetary carrier revolves counterclockwise due to reaction force of U/D front planetary pinion gear.
15. U/D rear internal gear and output shaft rotates counterclockwise for U/D front planetary carrier and one.
16. Final gear clockwise.

- During deceleration, driving force is connected to input shaft directly without one-way clutch. Therefore, engine brake operates.

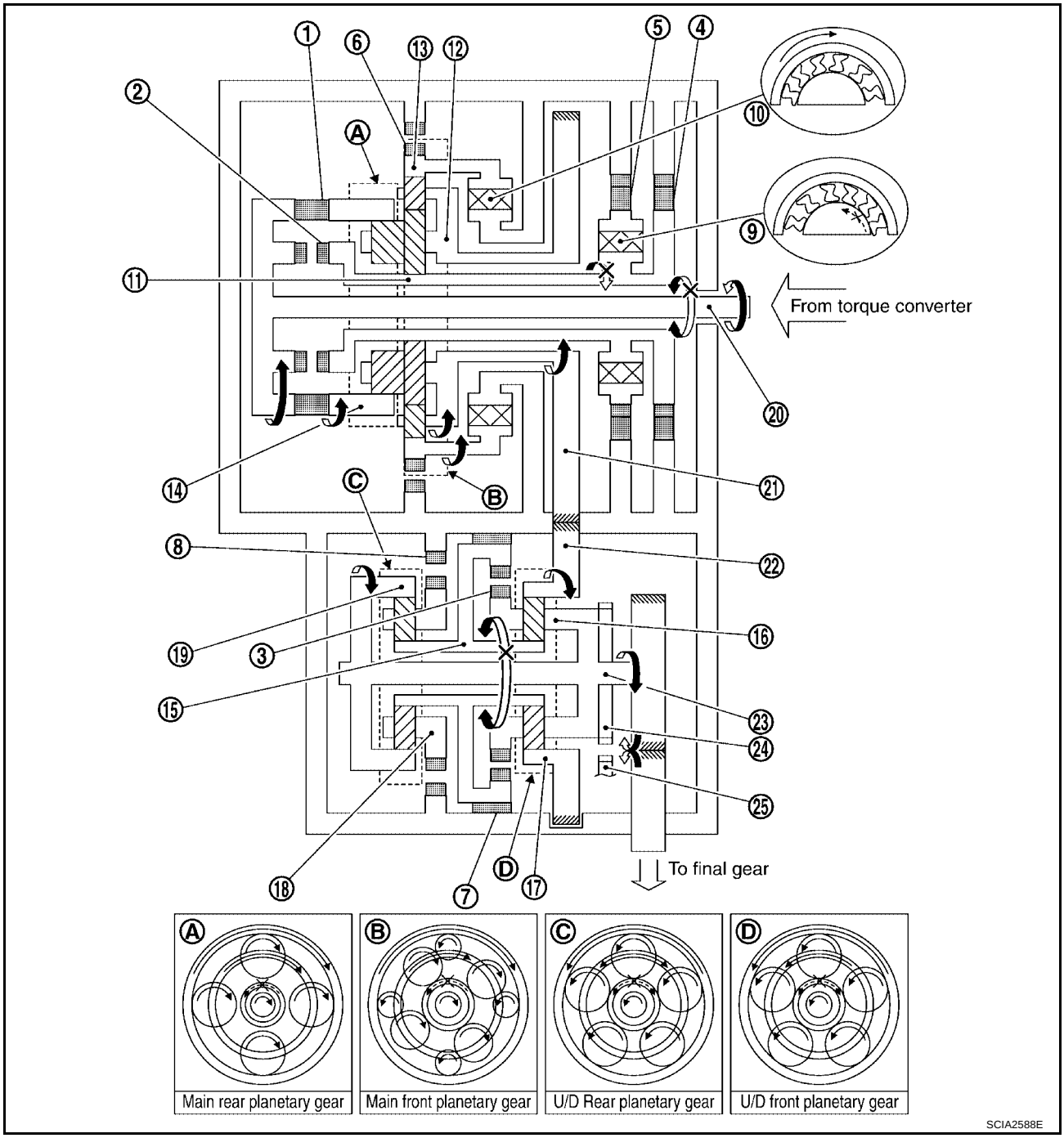

1. Forward clutch
2. Direct clutch
3. U/D clutch
4. 2nd coast brake
5. 2nd brake
6. 1st and reverse brake
7. U/D brake
8. B5 brake
9. One-way clutch No. 1
10. One-way clutch No. 2
11. Main sun gear
12. Main planetary carrier
13. Main front internal gear
14. Main rear internal gear
15. U/D sun gear
16. U/D front planetary carrier
17. U/D front internal gear
18. U/D rear planetary carrier
19. U/D rear internal gear
20. Input shaft
21. Counter drive gear
22. Counter driven gear
23. Output shaft
24. Parking gear
25. Parking pawl

“D” positions 4th gear

1. Input shaft rotates clockwise.
2. Forward clutch operates. (Connect input shaft to main rear internal gear.)
3. Main rear internal gear rotates clockwise.
4. Main rear planetary pinion gear rotates itself clockwise.
5. Main front large planetary pinion gear rotates itself clockwise for rear planetary pinion and one.
6. 2nd brake and 2nd coast brake operates.
7. One-way clutch No. 1 operates. (Lock rotation of main sun gear.)
8. Main planetary carrier revolves clockwise due to reaction force of front large planetary pinion gear.
9. Counter drive gear rotates clockwise for main planetary carrier and one.
10. Counter driven gear rotates counterclockwise.
11. U/D front internal gear rotates counterclockwise for counter driven gear and one.
12. U/D clutch operate. (Connect U/D sun gear to U/D front planetary carrier.)
13. U/D front planetary pinion gear cannot rotate itself, and U/D unit rotates counterclockwise as one.
14. Output shaft rotates counterclockwise for U/D unit and one.
15. Final gear clockwise.

- During deceleration, driving force is connected to input shaft directly without one-way clutch. Therefore, engine brake operates.

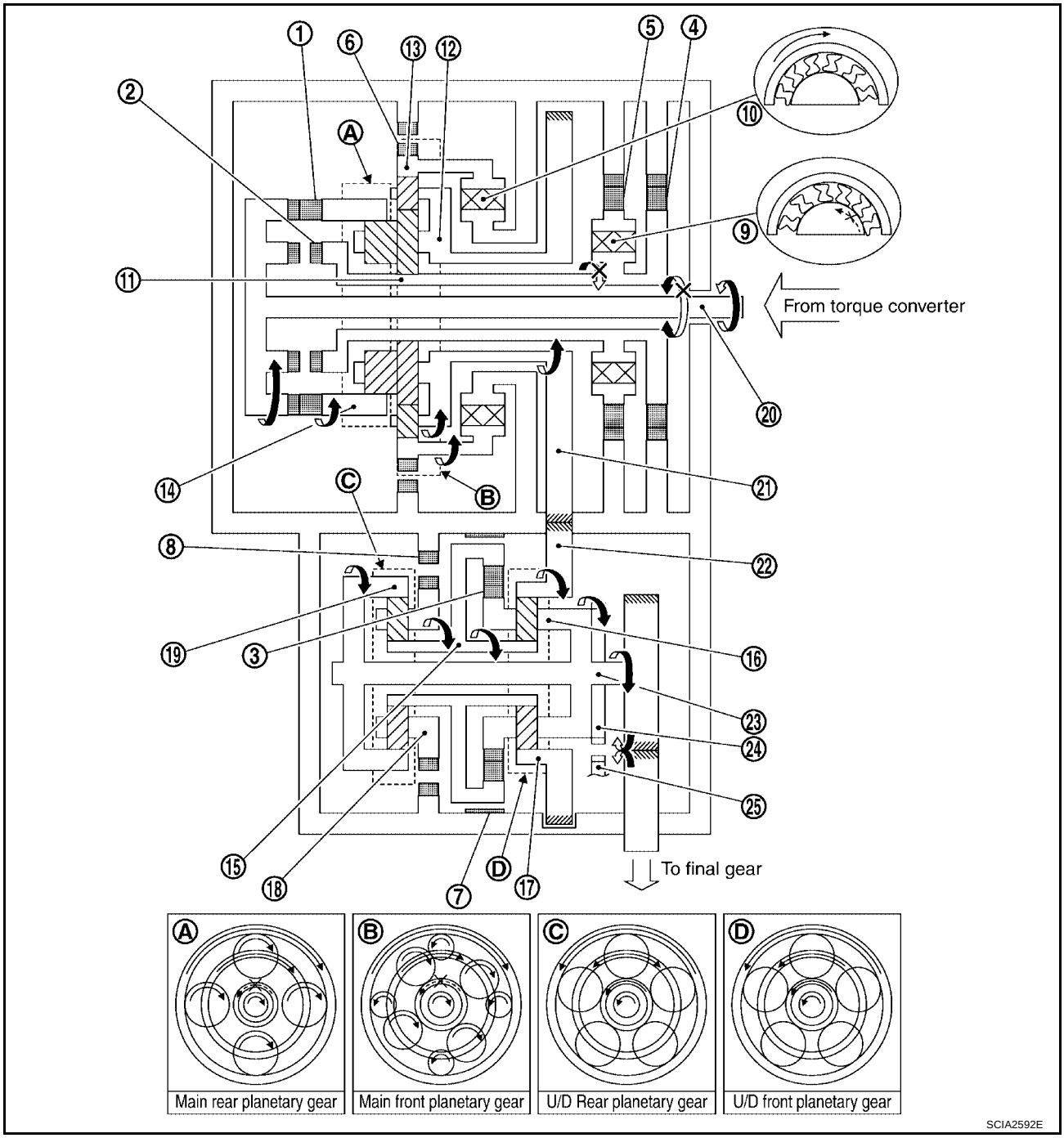

1. Forward clutch
2. Direct clutch
3. U/D clutch
4. 2nd coast brake
5. 2nd brake
6. 1st and reverse brake
7. U/D brake
8. B5 brake
9. One-way clutch No. 1
10. One-way clutch No. 2
11. Main sun gear
12. Main planetary carrier
13. Main front internal gear
14. Main rear internal gear
15. U/D sun gear
16. U/D front planetary carrier
17. U/D front internal gear
18. U/D rear planetary carrier
19. U/D rear internal gear
20. Input shaft
21. Counter drive gear
22. Counter driven gear
23. Output shaft
24. Parking gear
25. Parking pawl

“D” positions 5th gear

1. Input shaft rotates clockwise.
2. Forward clutch operates. (Connect input shaft to main rear internal gear.)
3. Direct clutch operates. (Connect input shaft to main sun gear.)
4. Main rear planetary pinion gear cannot rotate itself, and main rear planetary unit rotates clockwise as one.
5. Main front large planetary pinion gear cannot rotate itself for main rear planetary pinion gear and one, and main front planetary unit rotates clockwise as one.
6. Counter drive gear rotates clockwise for main front planetary unit and one.
7. Counter driven gear rotates counterclockwise.
8. U/D front internal gear rotates counterclockwise for counter driven gear and one.
9. U/D clutch operate. (Connect U/D sun gear to U/D front planetary carrier.)
10. U/D front planetary pinion gear cannot rotate itself, and U/D unit rotates counterclockwise as one.
11. Output shaft rotates counterclockwise for U/D unit and one.
12. Final gear clockwise.

- During deceleration, driving force is connected to input shaft directly without one-way clutch. Therefore, engine brake operates.

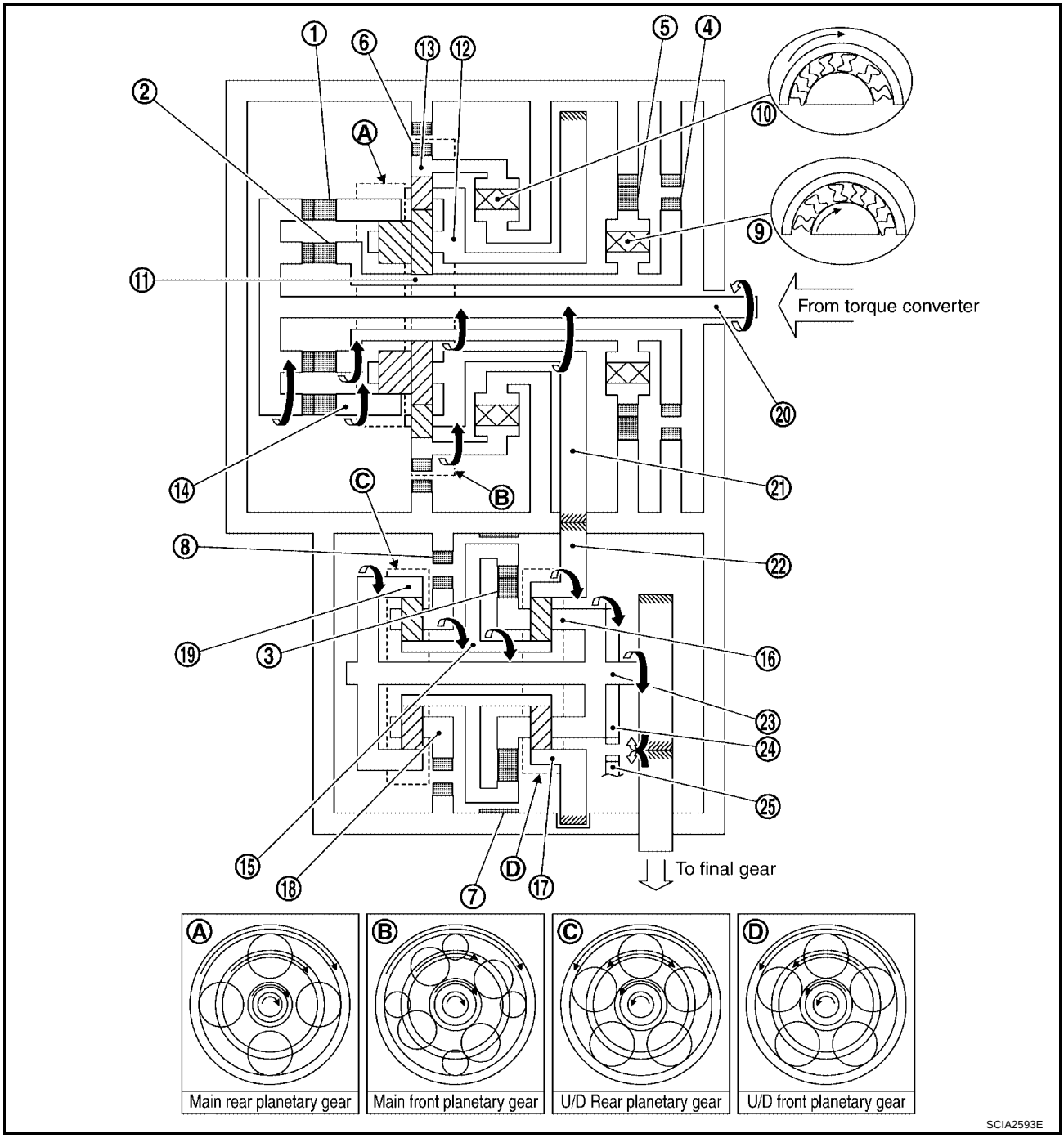

1. Forward clutch
2. Direct clutch
3. U/D clutch
4. 2nd coast brake
5. 2nd brake
6. 1st and reverse brake
7. U/D brake
8. B5 brake
9. One-way clutch No. 1
10. One-way clutch No. 2
11. Main sun gear
12. Main planetary carrier
13. Main front internal gear
14. Main rear internal gear
15. U/D sun gear
16. U/D front planetary carrier
17. U/D front internal gear
18. U/D rear planetary carrier
19. U/D rear internal gear
20. Input shaft
21. Counter drive gear
22. Counter driven gear
23. Output shaft
24. Parking gear
25. Parking pawl

“R” position

1. Input shaft rotates clockwise.
2. Direct clutch operates. (Connect input shaft to main sun gear.)
3. Main sun gear rotates clockwise.
4. Main rear planetary pinion gear rotates itself clockwise.
5. Main front large planetary pinion gear rotates itself counterclockwise for rear planetary pinion gear and one.
6. Main front small planetary pinion gear rotates itself clockwise.
7. 1st and reverse brake operates. (Lock rotation of main front internal gear.)
8. Main planetary carrier revolves counterclockwise due to reaction force of front small planetary pinion gear.
9. Counter drive gear rotates counterclockwise for main planetary carrier and one.
10. Counter driven gear rotates clockwise.
11. U/D front internal gear rotates clockwise for counter driven gear and one.
12. U/D front planetary pinion gear rotates itself clockwise.
13. U/D sun gear rotates counterclockwise.
14. U/D rear planetary pinion gear rotates itself clockwise.
15. B5 brake operate. (Lock rotation of U/D rear planetary carrier.)
16. U/D rear internal gear rotates clockwise.
17. U/D front planetary carrier and output shaft rotates clockwise for U/D rear internal gear and one.
18. Final gear counterclockwise.

- During deceleration, driving force is connected to input shaft directly without one-way clutch. Therefore, engine brake operates.

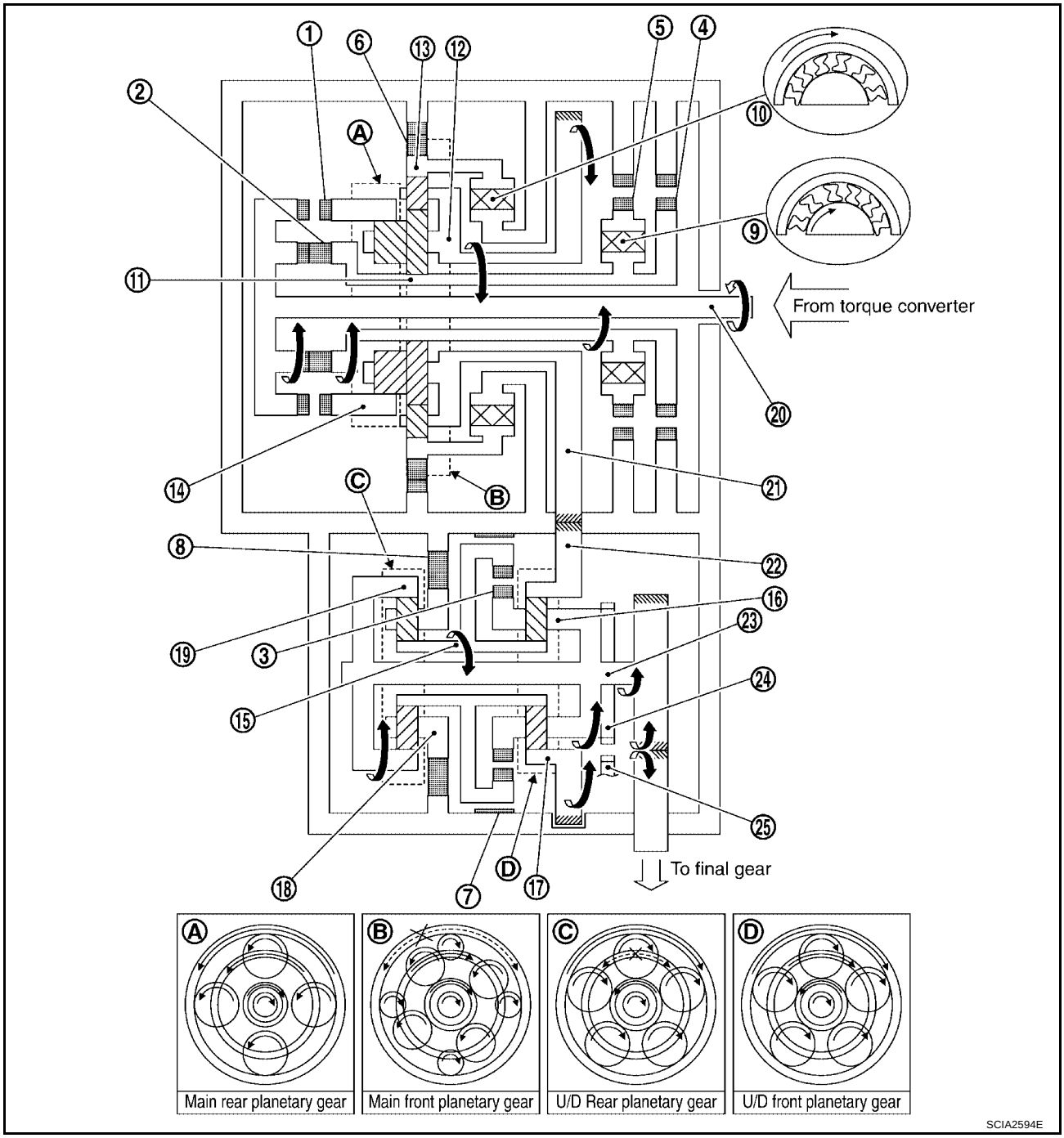

1. Forward clutch
2. Direct clutch
3. U/D clutch
4. 2nd coast brake
5. 2nd brake
6. 1st and reverse brake
7. U/D brake
8. B5 brake
9. One-way clutch No. 1
10. One-way clutch No. 2
11. Main sun gear
12. Main planetary carrier
13. Main front internal gear
14. Main rear internal gear
15. U/D sun gear
16. U/D front planetary carrier
17. U/D front internal gear
18. U/D rear planetary carrier
19. U/D rear internal gear
20. Input shaft
21. Counter drive gear
22. Counter driven gear
23. Output shaft
24. Parking gear
25. Parking pawl

TCM Function

UCS001E7

The function of the TCM is to:

- Receive input signals sent from various switches and sensors.
- Determine required line pressure, shifting point, lock-up operation, and engine brake operation.
- Send required output signals to the respective solenoids.

CONTROL SYSTEM OUTLINE

The automatic transaxle senses vehicle operating conditions through various sensors or signals. It always controls the optimum shift position and reduces shifting and lock-up shocks.

SENSORS (or SIGNAL)		TCM		ACTUATORS
PNP switch Throttle angle signal Throttle position signal Engine speed signal Engine torque signal A/T fluid temperature sensor Revolution sensor Turbine revolution sensor Vehicle speed signal Lever switch signal Stop lamp switch signal	⇒	Shift control Line pressure control Lock-up control Engine brake control Timing control Fail-safe control Self-diagnosis CONSULT-II communication line CAN communication line On board diagnosis	⇒	Shift solenoid valve A Shift solenoid valve B Shift solenoid valve C Shift solenoid valve D Shift solenoid valve E Pressure control solenoid valve A Pressure control solenoid valve B Pressure control solenoid valve C O/D OFF indicator lamp

CONTROL SYSTEM DIAGRAM

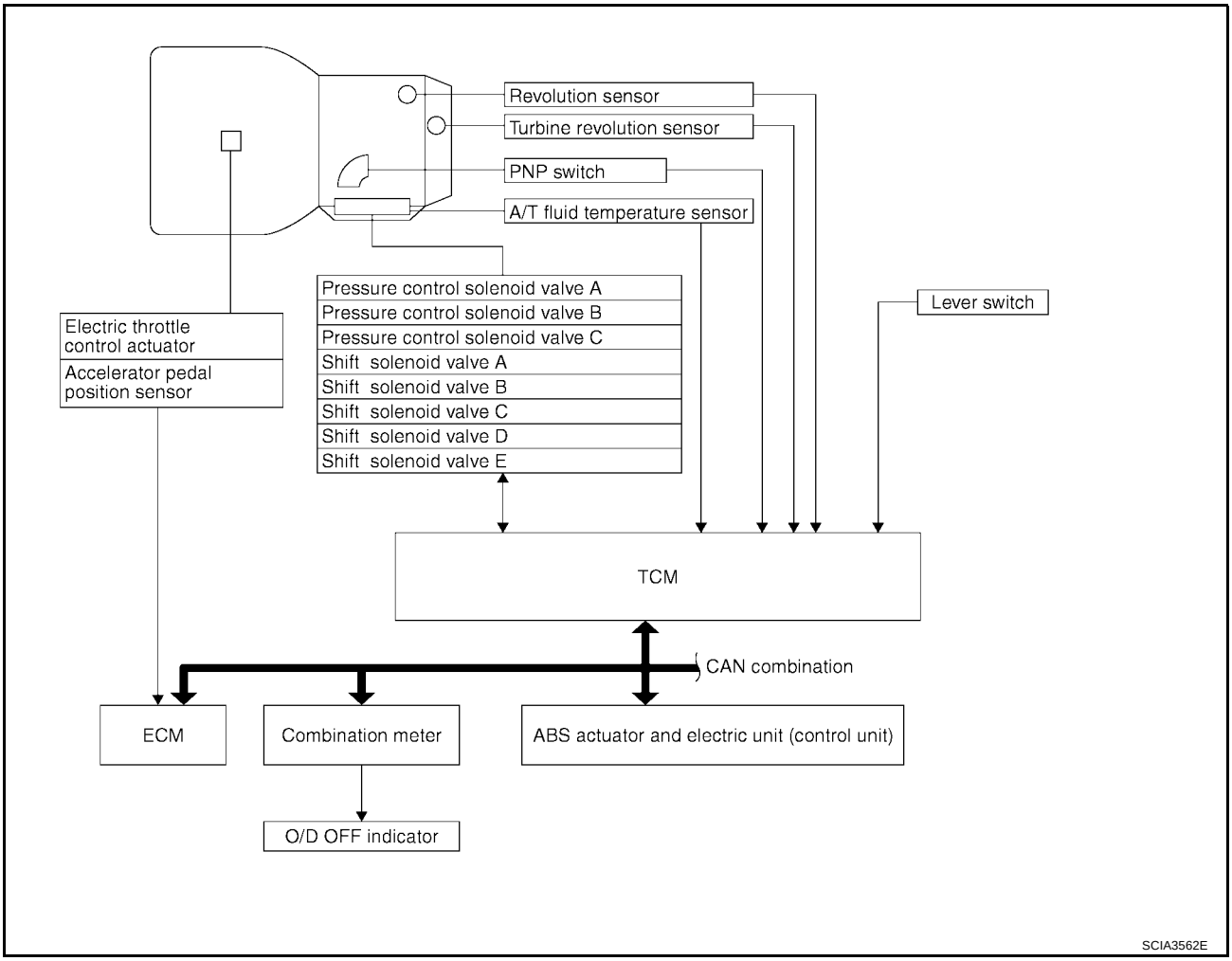

Input/Output Signal of TCM

UCS001E8

Control item			Line pressure control	Vehicle speed control	Shift control	Lock-up control	Engine brake control	Fail-safe function (*3)	Self-diagnostics function
Input	Throttle angle signal(*5)		X	X	X	X	X	X	X
	Throttle position signal(*5)		X(*2)	X(*2)		X	X(*2)		X(*4)
	Revolution sensor		X	X	X	X	X	X	X
	Turbine revolution sensor		X	X	X		X	X	X
	Vehicle speed signal MTR(*1) (*5)		X	X	X	X		X	X
	Engine speed signals(*5)			X	X	X		X	X
	Engine torque signals(*5)		X	X	X	X	X		X
	PNP switch		X	X	X	X	X	X	X(*4)
	Lever switch			X	X		X	X	X
	Stop lamp switch signal(*5)			X		X	X		X(*4)
	A/T fluid temperature sensor			X	X	X	X	X	X
	ASCD	Operation signal(*5)		X		X	X		
		Overdrive cancel signal(*5)		X		X	X		
	TCM power supply voltage signal		X	X	X	X	X	X	X
Output	Shift solenoid valve A/B/C/D/E			X	X			X	X
	Pressure control solenoid valve A		X	X	X	X	X	X	X
	Pressure control solenoid valve B			X	X		X	X	X
	Pressure control solenoid valve C				X	X		X	X
	Self-diagnostics table(*5)								X

*1: Spare for revolution sensor
*2: Spare for throttle angle signal
*3: If these input and output signals are different, the TCM triggers the fail-safe function.
*4: Used as a condition for starting self-diagnostics; if self-diagnostics are not started, it is judged that there is some kind of error.
*5: CAN communications.

CAN Communication

UCS001E9

SYSTEM DESCRIPTION

CAN (Controller Area Network) is a serial communication line for real time application. It is an on-vehicle multiplex communication line with high data communication speed and excellent error detection ability. Many electronic control units are equipped onto a vehicle, and each control unit shares information and links with other control units during operation (not independent). In CAN communication, control units are connected with 2 communication lines (CAN H line, CAN L line) allowing a high rate of information transmission with less wiring. Each control unit transmits/receives data but selectively reads required data only.
For details, refer to LAN-6, "CAN COMMUNICATION" .

Line Pressure Control

UCS001EA

- The pressure control solenoid A controls linear line pressure by control signal from TCM and line pressure for clutches and brakes to reduce shift shock.
- This pressure control solenoid A controls the pressure regulator valve as the signal pressure and adjusts the pressure of the operating oil discharged from the oil pump to the line pressure most appropriate to the driving state.

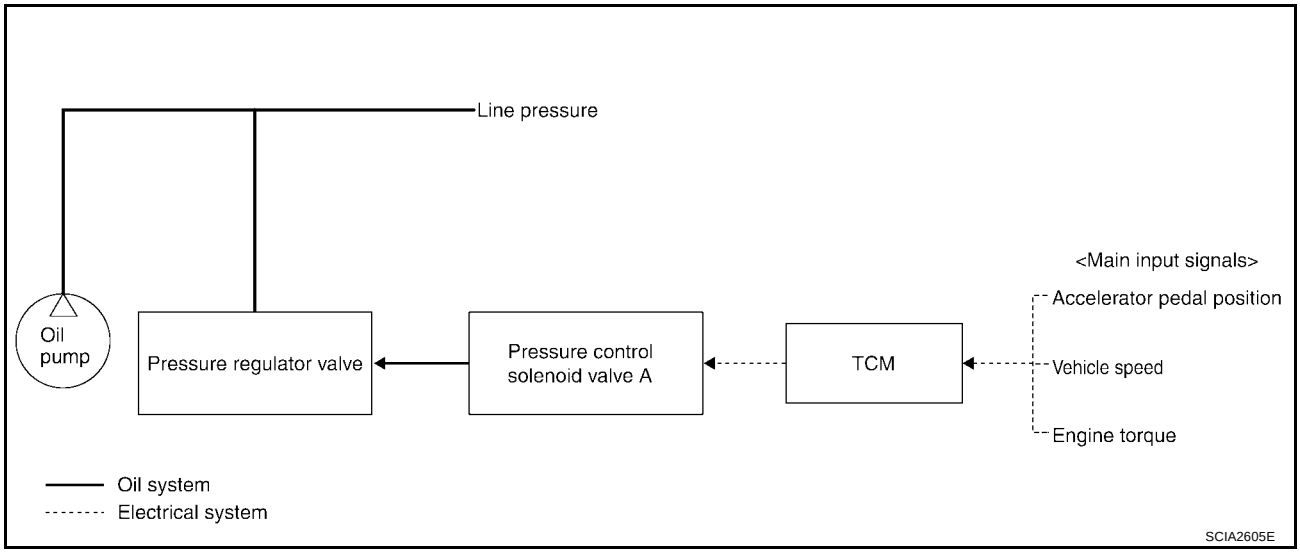

LINE PRESSURE CONTROL IS BASED ON THE TCM LINE PRESSURE CHARACTERISTIC PATTERN

In order to obtain the most appropriate line pressure characteristic to meet the current driving state, the TCM controls the pressure control solenoid A current valve and thus controls the line pressure.

Shift Control

UCS001EB

The clutch pressure control solenoid is controlled by the signals from the switches and sensors. Thus, the clutch pressure is adjusted to be appropriate to the engine load state and vehicle driving state. It becomes possible to finely control the clutch hydraulic pressure with high precision and a smoother shift change characteristic is attained.

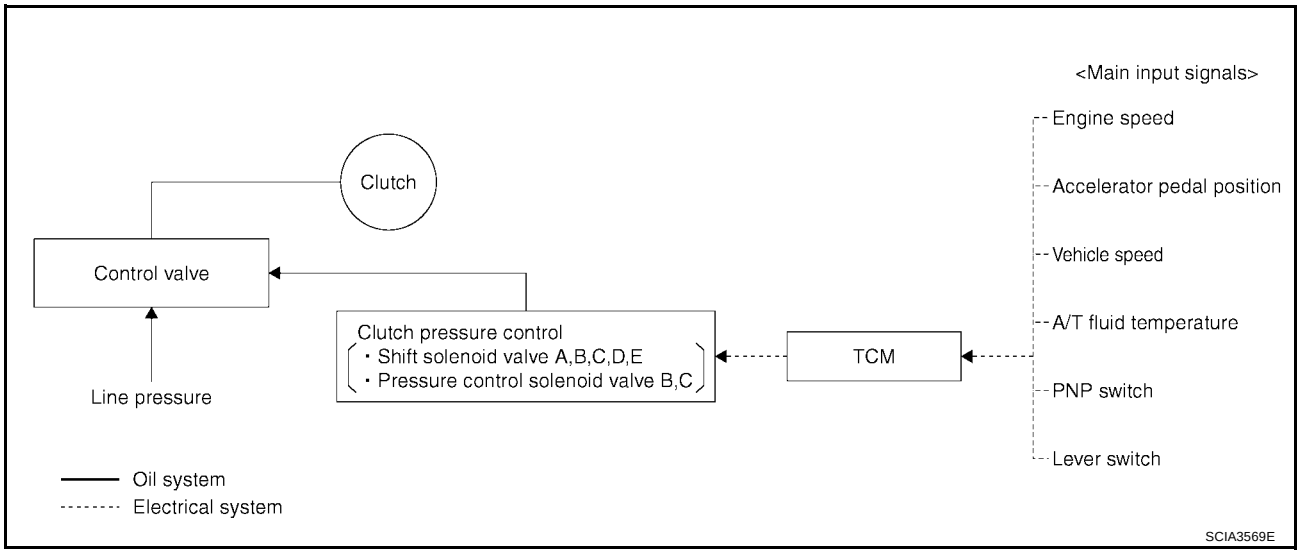

Basically TCM programmed for economy mode, but TCM changes to several shift schedule automatically according to specified condition.

SPECIAL SHIFT MODE

Upslope Mode

When TCM detects upslope from load of engine torque and decrease of acceleration, this mode changes shift points in high-speed side according to the upslope degree and avoids busy shift of A/T.

Downslope Mode

When TCM detects downslope from increase of acceleration with accelerator full close, this mode operates moderate engine brake by changing shift points in high-speed side.

Hot Mode Control

This control lowers ATF temperature by changing shift points when the temperature is extremely high.

Down Shift Permission Control

In order to avoid the over speed of the engine, down shift is done only at under a constant vehicle speed.

UP/DOWN SHIFT LEARNING CONTROL

This control learns the pressure to each clutch or brake in order to reduce shifting shock at each shifting (Up, Down, Coast down).

N-D SHIFT CONTROL

This control improves the N-D shift quality due to controlling line pressure solenoid valve according to forward clutch piston stroke learned in N-D shift learning control and applying best hydraulic pressure to forward clutch at N-D shift (include L).

N-D SHIFT LEARNING CONTROL

This control learns the forward clutch hydraulic pressure due to monitoring a forward clutch engaging time and a rotation change rate.

N-R SHIFT CONTROL

This control improves the N-R shift quality due to controlling shift pressure solenoid valve according to direct clutch piston stroke learned in N-R shift learning control and applying best hydraulic pressure to direct clutch at N-R shift.

N-R SHIFT LEARNING CONTROL

This control learns the direct clutch hydraulic pressure due to monitoring a direct clutch engaging time and a rotation change rate.

TORQUE REDUCTION CONTROL

This control improves the shift quality due to sending torque reduction request signal from TCM to ECM and cutting engine torque increase of shift at N-D shift, N-R shift and 1 ⇔ 2 ⇔ 3 ⇔ 4 ⇔ 5.
If accelerator pedal is depressed rapidly, this control establishes the upper limit value of engine torque and avoids engine flare at 2 ⇔ 3, 3 ⇔ 4 and 4 ⇒ 2 of clutch to clutch shift.

Lock-Up Control

UCS001EC

The torque converter clutch piston in the torque converter is engaged to eliminate torque converter slip to increase power transmission efficiency.
The torque converter clutch control valve operation is controlled by the pressure control solenoid valve C, which is controlled by a signal from TCM, and the torque converter clutch control valve engages or releases the torque converter clutch piston.

Lock-up Operation Condition Table

Selector lever	D position			L position	
Lever switch (A/T indicator)	OFF (D)		ON (4)	OFF (3)	ON (2)
Gear position	5	4	4	3	2
Lock-up	×	–	×	×	–
Slip lock-up	×	×	×	–	–

TORQUE CONVERTER CLUTCH CONTROL VALVE CONTROL

Lock-up Control System Diagram

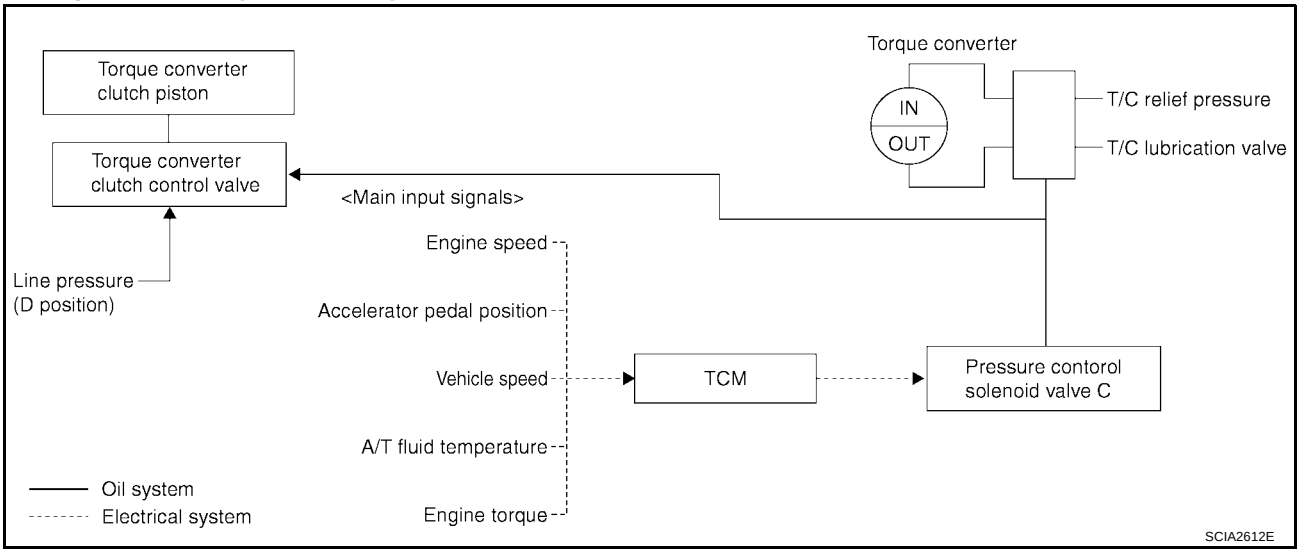

Lock-up Released

- In the lock-up released state, the torque converter clutch control valve is set into the unlocked state by the pressure control solenoid valve C and the lock-up apply pressure is drained.
  In this way, the torque converter clutch piston is not coupled.

Lock-up Applied

- In the lock-up applied state, the torque converter clutch control valve is set into the locked state by the pressure control solenoid valve C and lock-up apply pressure is generated.
  In this way, the torque converter clutch piston is pressed and coupled.

SMOOTH LOCK-UP CONTROL

When shifting from the lock-up released state to the lock-up applied state, the current output to the pressure control solenoid valve C is controlled with the TCM. In this way, when shifting to the lock-up applied state, the torque converter clutch is temporarily set to the half-clutched state to reduce the shock.

Half-Clutched State

- The current output from the TCM to the pressure control solenoid valve C is varied to steadily increase the pressure control solenoid valve C pressure.
  In this way, the lock-up apply pressure gradually rises and while the torque converter clutch piston is put into half-clutched status, the torque converter clutch piston operating pressure is increased and the coupling is completed smoothly.

Slip Lock-up Control

- In the slip region, the pressure control solenoid valve C current is controlled with the TCM to put it into the half-clutched state. This absorbs the engine torque fluctuation and lock-up operates from low speed.
  This raises the fuel efficiency for 4th and 5th gears at both low speed and when the accelerator has a low degree of opening.

ON BOARD DIAGNOSTIC (OBD) SYSTEM

PFP:00028

Introduction

UCS000TD

The A/T system has two self-diagnostic systems.
The first is the emission-related on board diagnostic system (OBD-II) performed by the TCM in combination with the ECM. The malfunction is indicated by the MIL (malfunction indicator lamp) and is stored as a DTC in the ECM memory but not the TCM memory.
The second is the TCM original self-diagnosis indicated by the O/D OFF indicator lamp. The malfunction is stored in the TCM memory. The detected items are overlapped with OBD-II self-diagnostic items. For detail, refer to AT-443, "SELF-DIAG RESULT MODE" .

OBD-II Function for A/T System

UCS000TE

The ECM provides emission-related on board diagnostic (OBD-II) functions for the A/T system. One function is to receive a signal from the TCM used with OBD-related parts of the A/T system. The signal is sent to the ECM when a malfunction occurs in the corresponding OBD-related part. The other function is to indicate a diagnostic result by means of the MIL (malfunction indicator lamp) on the instrument panel. Sensors, switches and solenoid valves are used as sensing elements.
The MIL automatically illuminates in One or Two Trip Detection Logic when a malfunction is sensed in relation to A/T system parts.

One or Two Trip Detection Logic of OBD-II

UCS000TF

ONE TRIP DETECTION LOGIC

If a malfunction is sensed during the first test drive, the MIL will illuminate and the malfunction will be stored in the ECM memory as a DTC. The TCM is not provided with such a memory function.

TWO TRIP DETECTION LOGIC

When a malfunction is sensed during the first test drive, it is stored in the ECM memory as a 1st trip DTC (diagnostic trouble code) or 1st trip freeze frame data. At this point, the MIL will not illuminate. — 1st Trip
If the same malfunction as that experienced during the first test drive is sensed during the second test drive, the MIL will illuminate. — 2nd Trip
The “trip” in the “One or Two Trip Detection Logic” means a driving mode in which self-diagnosis is performed during vehicle operation.

OBD-II Diagnostic Trouble Code (DTC)

UCS000TG

HOW TO READ DTC AND 1ST TRIP DTC

DTC and 1st trip DTC can be read by the following methods.
(with CONSULT-II or GST GST) CONSULT-II or GST (Generic Scan Tool) Examples: P0705, P0710 etc.
These DTC are prescribed by SAE J2012.
(CONSULT-II also displays the malfunctioning component or system.)

- **1st trip DTC No. is the same as DTC No.**
- **Output of the diagnostic trouble code indicates that the indicated circuit has a malfunction. However, in case of the Mode II and GST, they do not indicate whether the malfunction is still occurring or occurred in the past and returned to normal.**
  CONSULT-II can identify them as shown below, therefore, CONSULT-II (if available) is recommended.

A sample of CONSULT-II display for DTC and 1st trip DTC is shown on the next page. DTC or 1st trip DTC of a malfunction is displayed in SELF-DIAGNOSTIC RESULTS mode for “ENGINE” with CONSULT-II. Time data indicates how many times the vehicle was driven after the last detection of a DTC.

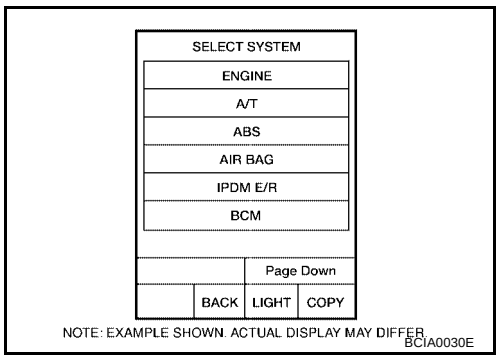

If the DTC is being detected currently, the time data will be “0”.

SELF-DIAG RESULTS	
DTC RESULTS	TIME
PNP SW/CIRC [P0705]	0

SAT015K

If a 1st trip DTC is stored in the ECM, the time data will be “1t”.

SELF-DIAG RESULTS	
DTC RESULTS	TIME
PNP SW/CIRC [P0705]	1 t

SAT016K

Freeze Frame Data and 1st Trip Freeze Frame Data

The ECM has a memory function, which stores the driving condition such as fuel system status, calculated load value, engine coolant temperature, short term fuel trim, long term fuel trim, engine speed and vehicle speed at the moment the ECM detects a malfunction.
Data which are stored in the ECM memory, along with the 1st trip DTC, are called 1st trip freeze frame data, and the data, stored together with the DTC data, are called freeze frame data and displayed on CONSULT-II or GST. The 1st trip freeze frame data can only be displayed on the CONSULT-II screen, not on the GST. For detail, refer to EC-60, "FREEZE FRAME DATA AND 1ST TRIP FREEZE FRAME DATA" .
Only one set of freeze frame data (either 1st trip freeze frame data of freeze frame data) can be stored in the ECM. 1st trip freeze frame data is stored in the ECM memory along with the 1st trip DTC. There is no priority for 1st trip freeze frame data and it is updated each time a different 1st trip DTC is detected. However, once freeze frame data (2nd trip detection/MIL on) is stored in the ECM memory, 1st trip freeze frame data is no longer stored. Remember, only one set of freeze frame data can be stored in the ECM. The ECM has the following priorities to update the data.

Priority	Items	
1	Freeze frame data	Misfire — DTC: P0300 - P0306 Fuel Injection System Function — DTC: P0171, P0172, P0174, P0175
2		Except the above items (Includes A/T related items)
3	1st trip freeze frame data	

Both 1st trip freeze frame data and freeze frame data (along with the DTC) are cleared when the ECM memory is erased.

HOW TO ERASE DTC

The diagnostic trouble code can be erased by CONSULT-II, GST or ECM DIAGNOSTIC TEST MODE as described following.

- **If the battery cable is disconnected, the diagnostic trouble code will be lost within 24 hours.**
- **When you erase the DTC, using CONSULT-II or GST is easier and quicker than switching the mode selector on the ECM.**

The following emission-related diagnostic information is cleared from the ECM memory when erasing DTC related to OBD-II. For details, refer to EC-55, "Emission-related Diagnostic Information" .

- **Diagnostic trouble codes (DTC)**
- **1st trip diagnostic trouble codes (1st trip DTC)**
- **Freeze frame data**

- **1st trip freeze frame data**
- **System readiness test (SRT) codes**
- **Test values**

How to erase DTC (with CONSULT-II)

- **If a DTC is displayed for both ECM and TCM, it is necessary to be erased for both ECM and TCM.**

1. If the ignition switch stays “ON” after repair work, be sure to turn ignition switch “OFF” once. Wait at least 10 seconds and then turn it “ON” (engine stopped) again.
2. Turn CONSULT-II “ON” and touch “TRANSMISSION”.
3. Touch “SELF-DIAG RESULTS”.
4. Touch “ERASE”. (The DTC in the TCM will be erased.) Then touch “BACK” twice.
5. Touch “ENGINE”.
6. Touch “SELF-DIAG RESULTS”.
7. Touch “ERASE”. (The DTC in the ECM will be erased.)

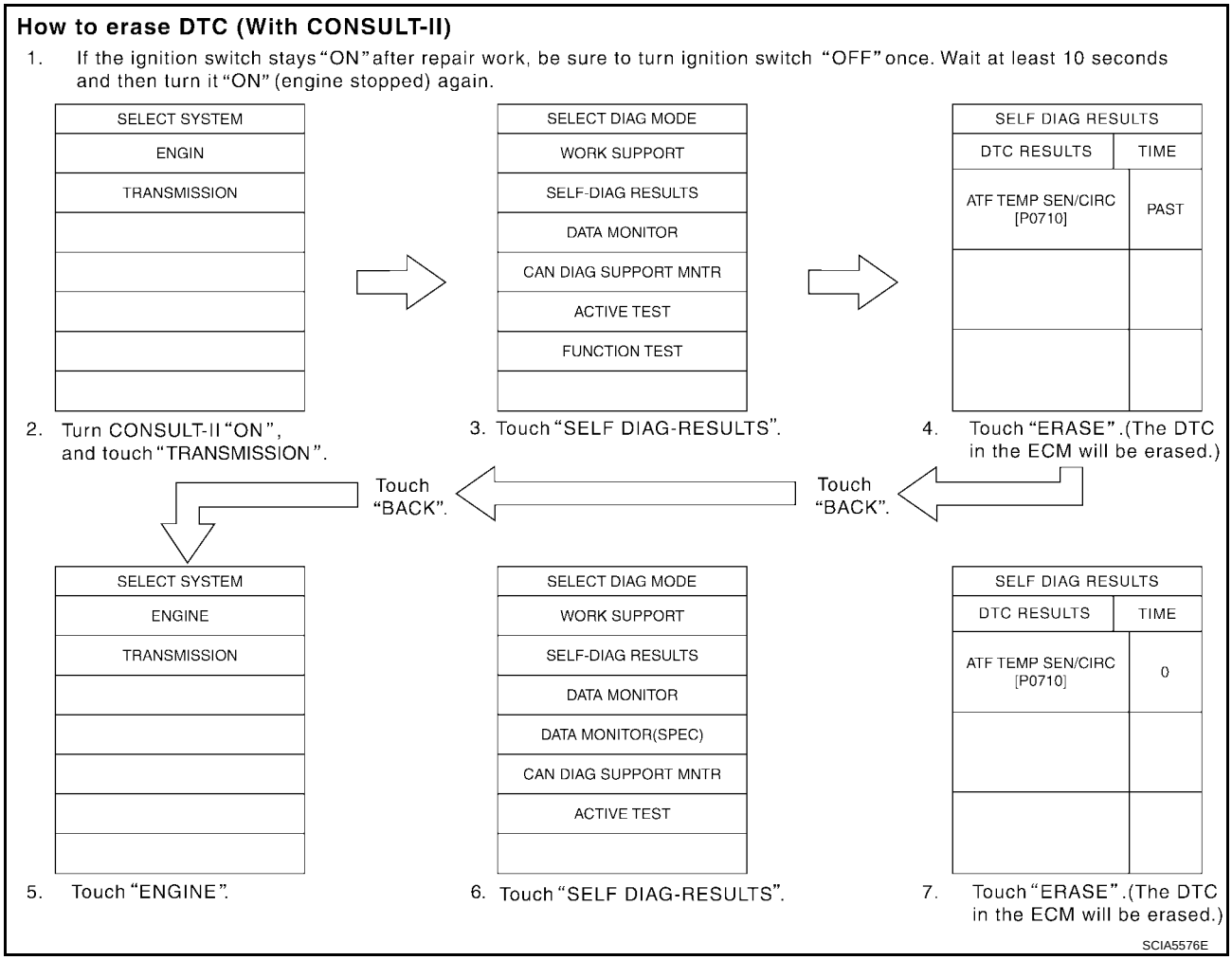

How to erase DTC (with GST)

1. If the ignition switch stays “ON” after repair work, be sure to turn ignition switch “OFF” once. Wait at least 10 seconds and then turn it “ON” (engine stopped) again.
2. Erase DTC with TCM. Refer to AT-451, "ERASE SELF-DIAGNOSIS" . (The engine warm-up step can be skipped when performing the diagnosis only to erase the DTC.)
3. Select Mode 4 with Generic Scan Tool (GST). For details, refer to EC-127, "Generic Scan Tool (GST) Function" .

How to erase DTC (no tools)

The O/D OFF indicator lamp is located on the instrument panel.

1. If the ignition switch stays “ON” after repair work, be sure to turn ignition switch “OFF” once. Wait at least 10 seconds and then turn it “ON” (engine stopped) again.
2. Erase DTC with TCM. Refer to AT-451, "ERASE SELF-DIAGNOSIS" . (The engine warm-up step can be skipped when performing the diagnosis only to erase the DTC.)
3. Erase DTC with ECM. Refer to EC-69, "How to Erase DTC" .

Malfunction Indicator Lamp (MIL)

UCS000TH

DESCRIPTION

The MIL is located on the instrument panel.

1. The MIL will light up when the ignition switch is turned “ON” without the engine running. This is a bulb check.

- If the MIL does not light up, refer to DI-22, "WARNING LAMPS" , or see EC-698, "MIL AND DATA LINK CONNECTOR" .

2. When the engine is started, the MIL should go off.
   If the MIL remains on, the on board diagnostic system has detected an engine system malfunction.

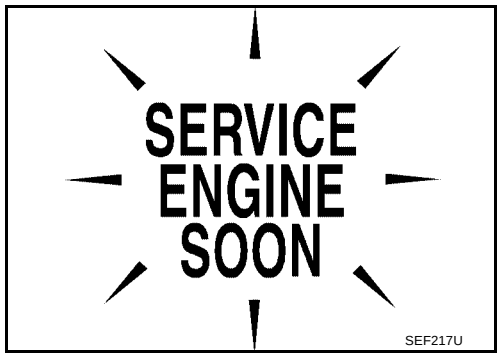

TROUBLE DIAGNOSIS

PFP:00004

DTC Inspection Priority Chart

UCS000TI

If some DTCs are displayed at the same time, perform inspections one by one based on the following priority chart.

NOTE:
If DTC U1000 is displayed with other DTCs, first perform the trouble diagnosis for DTC U1000. Refer to AT-452 .

Priority	Detected items (DTC)
1	U1000 CAN communication line
2	Except above

Fail-Safe

UCS000TJ

The TCM has an electrical fail-safe mode. This mode makes it possible to operate even if there is a malfunction in a main electronic control input/output signal circuit.
In fail-safe mode, a driving condition is selected according to the malfunctioning location, and line pressure is set at the maximum. For this reason, the customer will be subjected to uncomfortable “slipping” or “poor acceleration” of the vehicle.
In that case, handle according to the “diagnostics flow” (Refer to AT-416).

FAIL-SAFE FUNCTION

If any malfunction occurs in a sensor or solenoid, this function controls the A/T to make driving possible.

NOTE:
Line pressure is set at the maximum in fail-safe mode. Although gear position differs depending on the type of fail-safe modes, CONSULT-II indicates “5th”.

DTC	Malfunction items	Fail-safe*
P0500	Vehicle speed signal	No learning control.
P0613	TCM processor	Fail-safe mode 4
P0705	PNP switch	Fail-safe mode 4
P0710	ATF temperature sensor circuit	Sets ATF temperature data at 111°C (232°F) after 15 minutes. Inhibits lock-up control.
P0711	ATF temperature sensor function	Sets ATF temperature data at 111°C (232°F) after 15 minutes. Inhibits lock-up control.
P0717	Turbine revolution sensor	Fail-safe mode 1
P0722	Revolution sensor	Uses vehicle speed signal from combination meter as a substitute. Inhibits learning control.
P0726	Engine speed signal input circuit performance	Fail-safe mode 1
P0731	1st gear function	No 1st gear, no control for N-D shift.
P0732	2nd gear function	Fail-safe mode 1. Also, ECM restricts engine torque to prevent clutch slipping.
P0733	3rd gear function	Fail-safe mode 1. Also, ECM restricts engine torque to prevent clutch slipping.
P0734	4th gear function	Fail-safe mode 1. Also, ECM restricts engine torque to prevent clutch slipping.
P0735	5th gear function	Fail-safe mode 1. Also, ECM restricts engine torque to prevent clutch slipping.
P0744	Lock-up function	Fail-safe mode 1
P0745	Pressure control solenoid valve A	Fail-safe mode 1. Also, ECM restricts engine torque to prevent clutch slipping.

DTC	Malfunction items	Fail-safe*
P0750	Shift solenoid valve A	Any one of fail-safe modes ● Fail-safe mode 1 ● Fail-safe mode 7. Also, ECM restricts input torque to prevent clutch slipping.
P0755	Shift solenoid valve B	Any one of fail-safe modes ● Fail-safe mode 1 ● Fail-safe mode 8
P0760	Shift solenoid valve C	Any one of fail-safe modes ● Fail-safe mode 2 ● Fail-safe mode 5 ● Fail-safe mode 9
P0762	Shift solenoid valve C stuck ON	Fail-safe mode 2. Also, ECM restricts engine torque to prevent clutch slipping.
P0765	Shift solenoid valve D	Any one of fail-safe modes ● Fail-safe mode 1 ● Fail-safe mode 10. Also, ECM restricts input torque to prevent clutch slipping.
P0770	Shift solenoid valve E	Any one of fail-safe modes ● Fail-safe mode 1. Also, ECM restricts engine torque to prevent clutch slipping. ● Fail-safe mode 6. Also, ECM restricts engine torque to prevent clutch slipping.
P0775	Pressure control solenoid valve B	Fail-safe mode 3
P0780	Shift function	Fail-safe mode 1. Also, ECM restricts input torque to prevent clutch slipping.
P0795	Pressure control solenoid valve C	Fail-safe mode 1
P0797	Pressure control solenoid valve C stuck ON	Fail-safe mode 1
P0825	Lever switch	No lever switch control.
P0882	TCM power input signal	Fail-safe mode 1
P1726	Electric throttle control	● The accelerator opening angle is controlled by ECM according to a pre-determined accelerator angle to make driving possible. ● No lock-up, no learning control.
U1000	CAN communication circuit	Any one of fail-safe modes ● Fail-safe mode 1 ● Fail-safe mode 1. Also, ECM restricts engine torque to prevent clutch slipping. ● No learning control. ● No lock-up, no learning control, no special shift mode control.

*: For fail-safe modes 1 to 10, refer to AT-413, "Fail-safe mode list" .

Fail-safe mode list

Fail-safe mode	Selector lever	Gear position*1	Shift solenoid valve					Pressure control solenoid valve		
			A	B	C	D	E	A	B	C
Fail-safe mode 1	D position	4th	OFF	OFF	OFF	OFF	OFF	OFF	OFF	OFF
	L position	2nd	OFF	OFF	ON	OFF	OFF	OFF	OFF	OFF
	R position	Reverse	OFF	OFF	OFF	OFF	ON	OFF	OFF	OFF
Fail-safe mode 2 (CONSULT-II displays “8”)	D position	3rd	OFF	OFF	ON	ON	OFF	OFF	OFF	OFF
	L position	2nd	OFF	OFF	ON	OFF	OFF	OFF	OFF	OFF
	R position	Reverse	OFF	OFF	ON	OFF	ON	OFF	OFF	OFF

Fail-safe mode	Selector lever	Gear position*1	Shift solenoid valve					Pressure control solenoid valve		
			A	B	C	D	E	A	B	C
Fail-safe mode 3	D position	4th	OFF	OFF	OFF	OFF	OFF	OFF	OFF	OFF
	L position	2nd	OFF	OFF	ON	OFF	ON	OFF	OFF	OFF
	R position	Reverse	OFF	OFF	OFF	OFF	ON	OFF	OFF	OFF
Fail-safe mode 4	D position	4th	OFF	OFF	OFF	OFF	OFF	OFF	OFF	OFF
	L position	4th	OFF	OFF	OFF	OFF	OFF	OFF	OFF	OFF
	R position	Reverse	OFF	OFF	OFF	OFF	OFF	OFF	OFF	OFF
Fail-safe mode 5	D position	4th	OFF	OFF	OFF	OFF	OFF	OFF	OFF	OFF
	L position	4th	OFF	OFF	OFF	OFF	OFF	OFF	OFF	OFF
	R position	Reverse	OFF	OFF	OFF	OFF	ON	OFF	OFF	OFF
Fail-safe mode 6	D position	4th	OFF	OFF	OFF	OFF	OFF	OFF	OFF	OFF
	L position	2nd	OFF	OFF	ON	OFF	OFF	OFF	OFF	OFF
	R position	Reverse	OFF	OFF	ON	OFF	OFF	OFF	OFF	OFF
Fail-safe mode 7	D position	4th	ON	OFF	OFF	OFF	OFF	OFF	OFF	OFF
	L position	2nd	ON	OFF	ON	OFF	OFF	OFF	OFF	OFF
	R position	Reverse*2	ON	OFF	ON	ON	OFF	OFF	OFF	OFF
Fail-safe mode 8 (CONSULT-II displays “1”)	D position	5th	OFF	ON	OFF	OFF	OFF	OFF	OFF	OFF
	L position	(2nd)*3	OFF	ON	ON	OFF	OFF	OFF	OFF	OFF
	R position	Reverse	OFF	ON	OFF	OFF	ON	OFF	OFF	OFF
Fail-safe mode 9 (CONSULT-II displays “8”)	D position	4th	OFF	OFF	OFF	ON	OFF	OFF	OFF	OFF
	L position	4th	OFF	OFF	OFF	OFF	OFF	OFF	OFF	OFF
	R position	Reverse	OFF	OFF	OFF	OFF	ON	OFF	OFF	OFF
Fail-safe mode 10 (CONSULT-II displays “6”)	D position	4th	OFF	OFF	OFF	ON	OFF	OFF	OFF	OFF
	L position	3rd	OFF	OFF	ON	ON	OFF	OFF	OFF	OFF
	R position	Reverse*2	OFF	OFF	ON	ON	OFF	OFF	OFF	OFF

*1: CONSULT-II indicates “5th”.
*2: Reverse gear ratio difference (Gear ratio: 3.342)
*3: 3rd gear ratio difference (Gear ratio: 2.301)

How To Perform Trouble Diagnosis For Quick and Accurate Repair

UCS000TK

INTRODUCTION

The TCM receives a signal from the vehicle speed signal, ECM (throttle opening) or PNP switch and provides shift control or lock-up control via A/T solenoid valves.

The TCM also communicates with the ECM by means of a signal sent from sensing elements used with the OBD-related parts of the A/T system for malfunction-diagnostic purposes. The TCM is capable of diagnosing malfunctioning parts while the ECM can store malfunctions in its memory.

Input and output signals must always be correct and stable in the operation of the A/T system. The A/T system must be in good operating condition and be free of valve seizure, solenoid valve malfunction, etc.

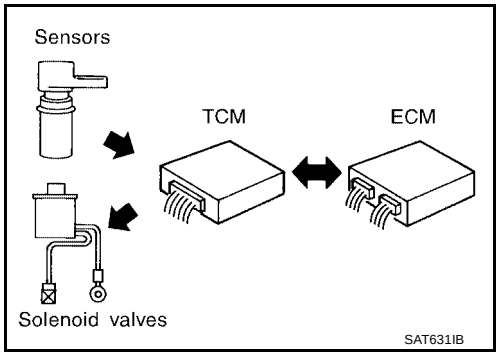

It is much more difficult to diagnose an error that occurs intermittently rather than continuously. Most intermittent errors are caused by poor electric connections or improper wiring. In this case, careful checking of suspected circuits may help prevent the replacement of good parts.
A visual check only may not find the cause of the errors. A road test with CONSULT-II (or GST) or a circuit tester connected should be performed. Follow the AT-416, "WORK FLOW" .

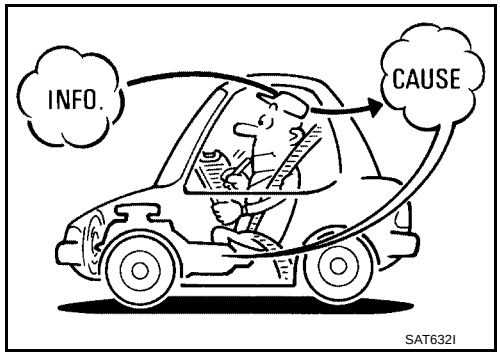

Before undertaking actual checks, take a few minutes to talk with a customer who approaches with a driveability complaint. The customer can supply good information about such errors, especially intermittent ones. Find out what symptoms are present and under what conditions they occur. A “Diagnostic Worksheet” as shown on the example (Refer to AT-417) should be used.
Start your diagnosis by looking for “conventional” errors first. This will help troubleshoot driveability errors on an electronically controlled engine vehicle.
Also check related Service bulletins.

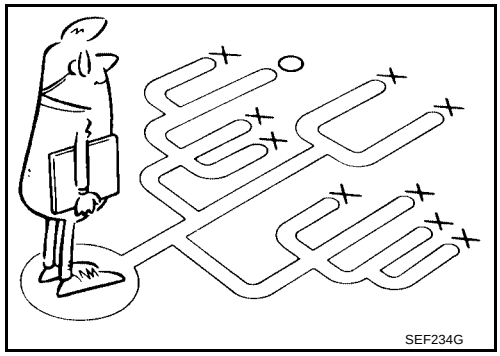

WORK FLOW

A good understanding of the malfunction conditions can make troubleshooting faster and more accurate.
In general, each customer feels differently about a malfunction. It is important to fully understand the symptoms or conditions for a customer complaint.
Make good use of the two sheets provided, “Information From Customer” (Refer to AT-417) and “Diagnostic Worksheet” (Refer to AT-417), to perform the best troubleshooting possible.

Work Flow Chart

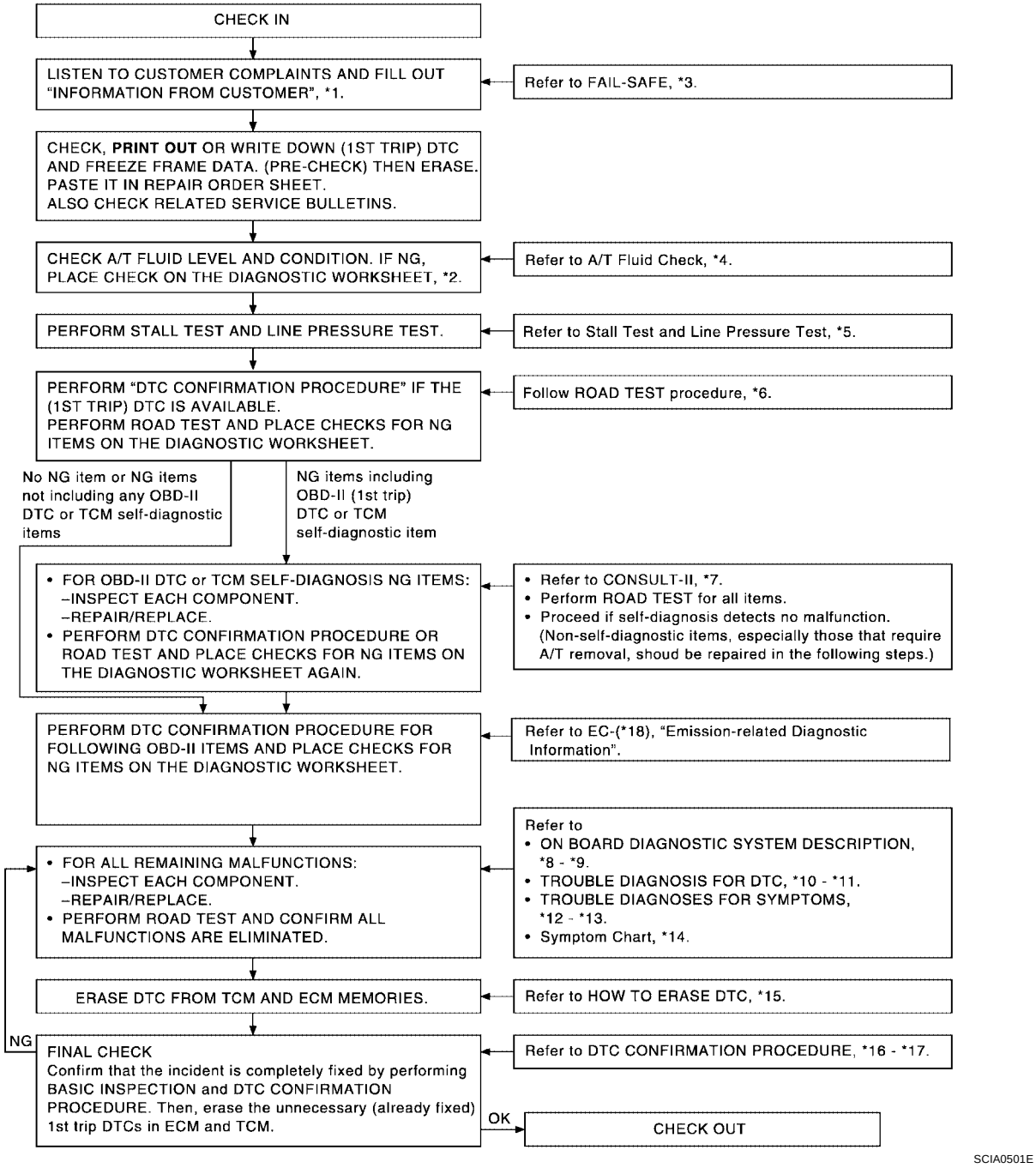

*1. AT-417	*2. AT-417	*3. AT-412
*4. AT-422	*5. AT-422, AT-424	*6. AT-425
*7. AT-442	*8. AT-408	*9. AT-411
*10. AT-452	*11. AT-577	*12. AT-578
*13. AT-598	*14. AT-432	*15. AT-409
*16. AT-452	*17. AT-577	*18. EC-55

DIAGNOSTIC WORKSHEET

Information From Customer

KEY POINTS

- **WHAT**..... Vehicle & A/T model
- **WHEN**..... Date, Frequencies
- **WHERE**..... Road conditions
- **HOW**..... Operating conditions, Symptoms

Customer name MR/MS	Model & Year	VIN
Trans. Model	Engine	Mileage
Incident Date	Manuf. Date	In Service Date
Frequency	❑ Continuous ❑ Intermittent (times a day)	
Symptoms	❑ Vehicle does not move. (❑ Any position ❑ Particular position)	
	❑ No up-shift (❑ 1st → 2nd ❑ 2nd → 3rd ❑ 3rd → 4th ❑ 4th → 5th)	
	❑ No down-shift (❑ 5th → 4th ❑ 4th → 3rd ❑ 3rd → 2nd ❑ 2nd → 1st)	
	❑ Lock-up malfunction	
	❑ Shift point too high or too low.	
	❑ Shift shock or slip (❑ N → D ❑ Lock-up ❑ Any drive position)	
	❑ Noise or vibration	
	❑ No kick down	
	❑ No pattern select	
	❑ Others ( )	
Malfunction indicator lamp (MIL)	❑ Continuously lit	❑ Not lit

Diagnostic Worksheet Chart

1	❑ Read the item on cautions concerning fail-safe and understand the customer's complaint.			AT-412
2	❑ A/T fluid inspection			AT-422
		❑ Leak (Repair leak location.) ❑ State ❑ Amount		
3	❑ Stall test, time lag test and line pressure test			AT-422, AT-424
		❑ Stall test		
			❑ Engine ❑ Torque converter one-way clutch ❑ Line pressure is low ❑ Forward clutch ❑ Direct clutch ❑ 1st and reverse brake	❑ B5 brake ❑ One-way clutch No. 2 ❑ Oil pump ❑ Oil strainer ❑ Oil leak for each range circuit
		❑ Time lag test		
			❑ Line pressure is low ❑ Forward clutch ❑ Direct clutch ❑ 1st and reverse brake ❑ One-way clutch No. 2	❑ Oil pump ❑ Oil strainer ❑ Oil leak for “D” position circuit ❑ Oil leak for “R” position circuit
		❑ Line pressure inspection - Suspected part:		

4	❏ Perform all road tests and enter checks in required inspection items.			AT-425
	4-1.	Check before engine is started		AT-426
		❏ The O/D OFF indicator lamp does not come on. AT-578 . ❏ Perform self-diagnostics. Enter checks for detected items.		
			❏ Vehicle speed sensor·MTR. AT-455 . ❏ TCM processor. AT-457 . ❏ PNP switch. AT-459 . ❏ A/T fluid temperature sensor circuit. AT-465 . ❏ A/T fluid temperature sensor performance. AT-470 . ❏ Turbine revolution sensor circuit. AT-475 . ❏ Vehicle speed sensor·A/T (revolution sensor) circuit. AT-479 . ❏ Engine speed input circuit performance. AT-483 . ❏ 1st gear function. AT-485 . ❏ 2nd gear function. AT-488 . ❏ 3rd gear function. AT-494 . ❏ 4th gear function. AT-500 . ❏ 5th gear function. AT-505 . ❏ Lock-up function. AT-511 . ❏ Shift function. AT-554 . ❏ Pressure control solenoid valve A. AT-514 . ❏ Pressure control solenoid valve B. AT-549 . ❏ Pressure control solenoid valve C. AT-558 . ❏ Shift solenoid valve A. AT-519 . ❏ Shift solenoid valve B. AT-524 . ❏ Shift solenoid valve C. AT-529 . ❏ Shift solenoid valve D. AT-539 . ❏ Shift solenoid valve E. AT-544 . ❏ Pressure control solenoid valve C stuck ON. AT-563 . ❏ Shift solenoid valve C stuck ON. AT-534 . ❏ Lever switch circuit. AT-568 . ❏ TCM power input signal. AT-572 . ❏ Electric throttle control system. AT-577 . ❏ CAN communication. AT-452 . ❏ Battery ❏ Other	
	4-2.	Idle inspection		AT-426
		❏ Engine cannot be started in “P” and “N” position. AT-580 . ❏ In “ P” position, vehicle moves when pushed. AT-580 . ❏ In “N” position, vehicle moves. AT-581 . ❏ Large shock when shifted from “N” to “D” position. AT-582 . ❏ Vehicle does not creep backward in “R” position. AT-583 . ❏ Vehicle does not creep forward in “D” or “L” position. AT-584 .		
	4-3.	Driving tests		AT-428
		Part 1		
		❏ Vehicle cannot be started from D1. AT-585 . ❏ A/T does not shift: D1 → D2. AT-585 . ❏ A/T does not shift: D2 → D3. AT-586 . ❏ A/T does not shift: D3 → D4. AT-587 . ❏ A/T does not shift: D4 → D5. AT-588 . ❏ A/T does not perform lock-up. AT-589 ❏ A/T does not hold lock-up condition. AT-590 . ❏ Lock-up is not released. AT-591 .		

4	4-3	Part 2		AT-429
		❏ Vehicle cannot be started from D1. AT-585 . ❏ A/T does not shift: D1 → D2. AT-585 . ❏ A/T does not shift: D2 → D3. AT-586 . ❏ A/T does not shift: D3 → D4. AT-587 .		
		Part 3		AT-430
		❏ A/T does not shift: 5th gear → 4th gear, when lever switch “OFF” → “ON”. AT-592 . ❏ A/T does not shift: 4th gear → 3rd gear, when selector lever “D” → “L”. AT-593 . ❏ A/T does not shift: 3rd gear → 2nd gear, when lever switch “OFF” → “ON”. AT-595 . ❏ A/T does not shift: 2nd gear → 1st gear, when release accelerator pedal. AT-596 . ❏ Vehicle does not decelerate by engine brake. AT-597 . ❏ Perform self-diagnostics. Enter checks for detected items.		
			❏ Vehicle speed sensor·MTR. AT-455 . ❏ TCM processor. AT-457 . ❏ PNP switch. AT-459 . ❏ A/T fluid temperature sensor circuit. AT-465 . ❏ A/T fluid temperature sensor performance. AT-470 . ❏ Turbine revolution sensor circuit. AT-475 . ❏ Vehicle speed sensor·A/T (revolution sensor) circuit. AT-479 . ❏ Engine speed input circuit performance. AT-483 . ❏ 1st gear function. AT-485 . ❏ 2nd gear function. AT-488 . ❏ 3rd gear function. AT-494 . ❏ 4th gear function. AT-500 . ❏ 5th gear function. AT-505 . ❏ Lock-up function. AT-511 . ❏ Shift function. AT-554 . ❏ Pressure control solenoid valve A. AT-514 . ❏ Pressure control solenoid valve B. AT-549 . ❏ Pressure control solenoid valve C. AT-558 . ❏ Shift solenoid valve A. AT-519 . ❏ Shift solenoid valve B. AT-524 . ❏ Shift solenoid valve C. AT-529 . ❏ Shift solenoid valve D. AT-539 . ❏ Shift solenoid valve E. AT-544 . ❏ Pressure control solenoid valve C stuck ON. AT-563 . ❏ Shift solenoid valve C stuck ON. AT-534 . ❏ Lever switch circuit. AT-568 . ❏ TCM power input signal. AT-572 . ❏ Electric throttle control system. AT-577 . ❏ CAN communication. AT-452 . ❏ Battery ❏ Other	
5	❏ Inspect each system for items found to be NG in the self-diagnostics and repair or replace the malfunction parts.			
6	❏ Perform all road tests and enter the checks again for the required items.			AT-425
7	❏ For any remaining NG items, perform the “diagnostics procedure” and repair or replace the malfunction parts. See the chart for diagnostics by symptoms. (This chart also contains other symptoms and inspection procedures.)			AT-432
8	❏ Erase the results of the self-diagnostics from the TCM.			AT-451

A/T Electrical Parts Location

UCS000TL

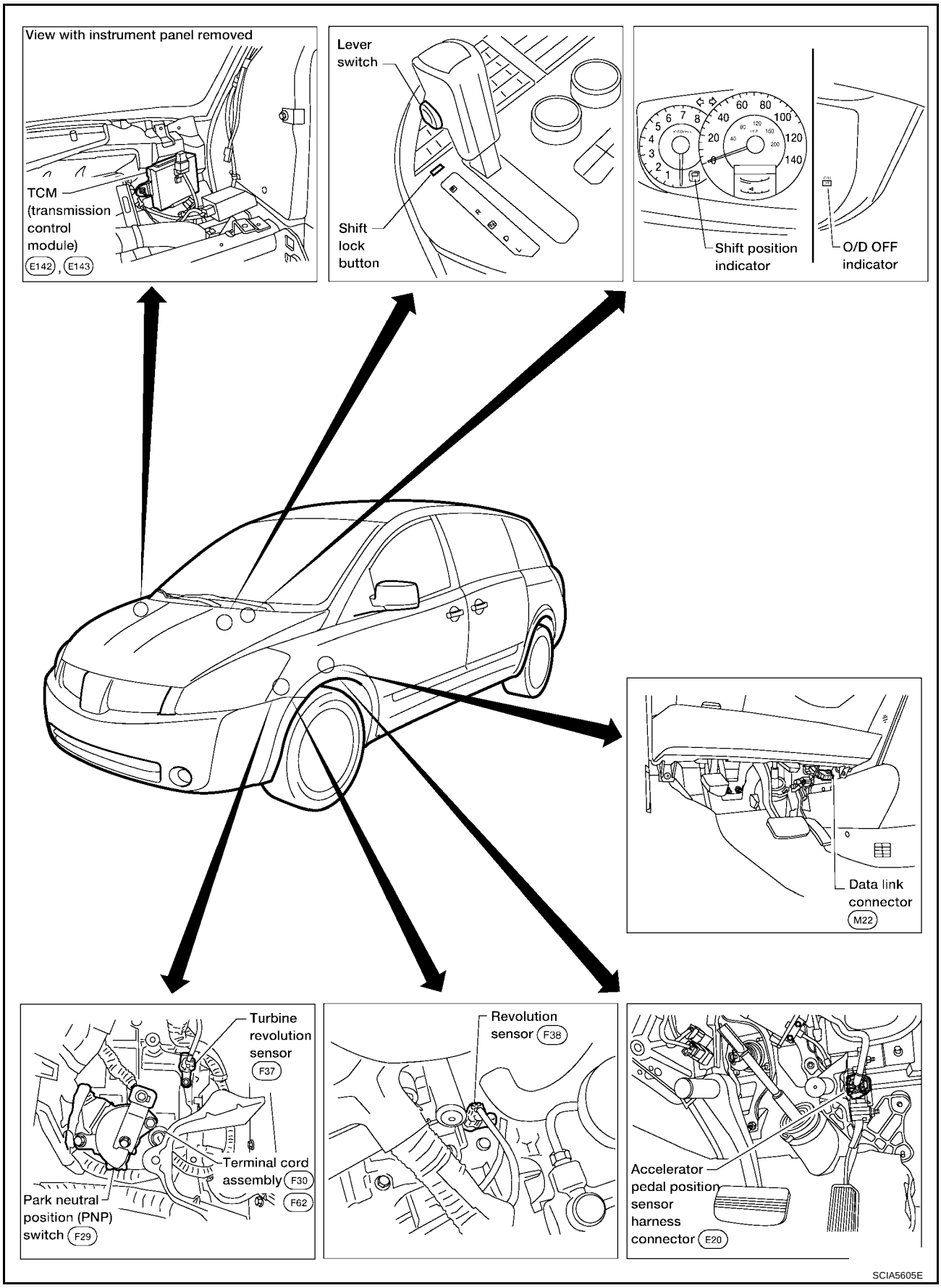

Circuit Diagram

UCS000TM

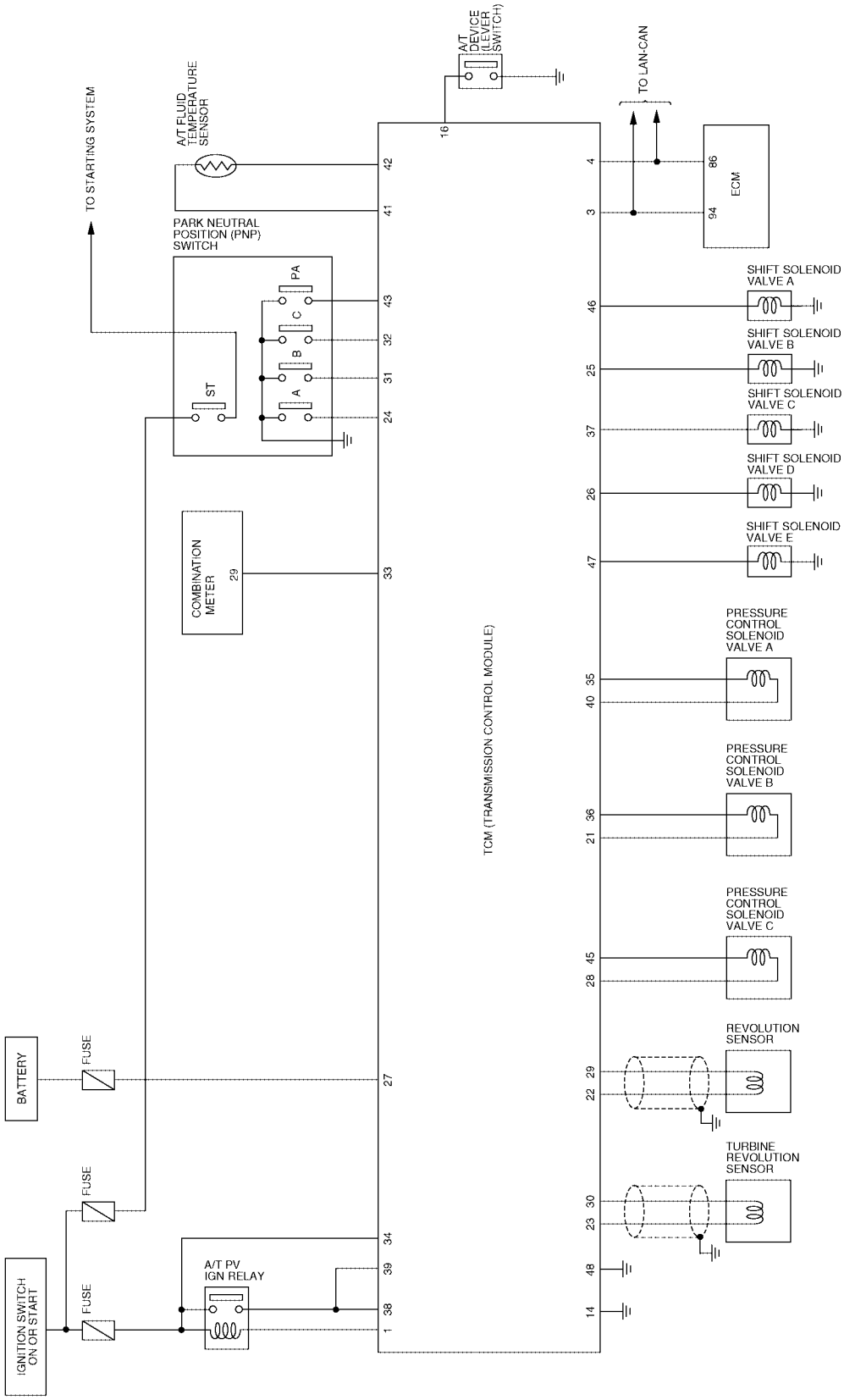

BCWA0191E

Inspections Before Trouble Diagnosis

UCS000TN

A/T FLUID CHECK

Fluid leakage and fluid level check

- Inspect for fluid leakage and check the fluid level. Refer to MA-21, "Checking A/T Fluid" .

Fluid condition check

Inspect the fluid condition.

Fluid status	Conceivable Cause	Required Operation
Varnished (viscous varnish state)	Clutch, brake scorched	Replace the A/T fluid and check the A/T main unit and the vehicle for malfunctions (wire harnesses, cooler pipes, etc.)
Milky white or cloudy	Water in the fluid	Replace the A/T fluid and check for places where water is getting in.
Large amount of metal powder mixed in	Unusual wear of sliding parts within A/T	Replace the A/T fluid and check for improper operation of the A/T.

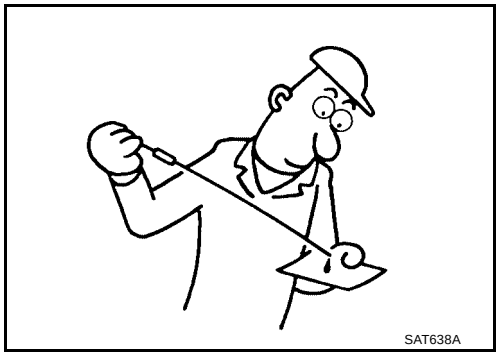

STALL TEST

Stall test procedure

1. Inspect the amount of engine oil. Replenish the engine oil if necessary.
2. Drive for about 10 minutes to warm up the vehicle so that the A/T fluid temperature is 50 to 80°C (122 to 176°F). Inspect the amount of A/T fluid. Replenish if necessary.
3. Switch of A/C and light etc. are off.

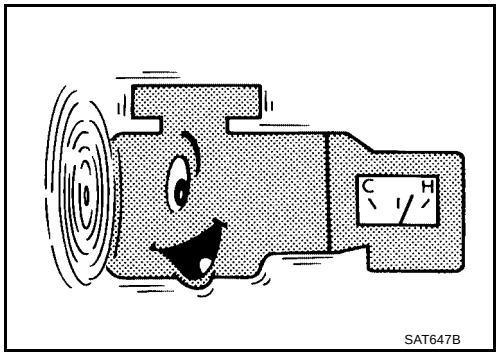

4. Securely engage the parking brake so that the tires do not turn.

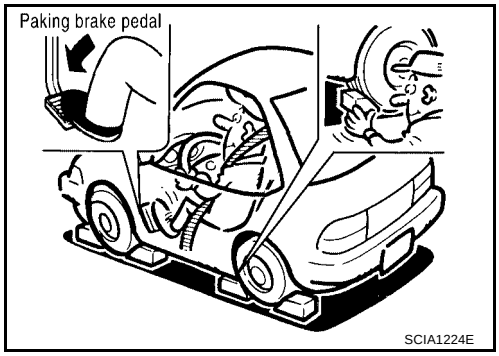

5. Engine start, apply foot brake, and place selector lever in “D” position.
6. While holding down the foot brake, gradually press down the accelerator pedal.
7. Quickly read off the stall speed, then quickly remove your foot from the accelerator pedal.

   CAUTION:
   Do not hold down the accelerator pedal for more than 5 seconds during this test.
8. Move the selector lever to the “N” position.
9. Cool down the A/T fluid.

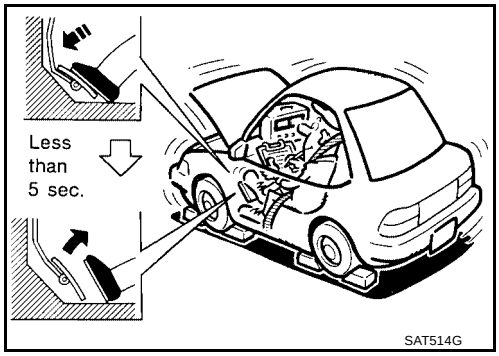

CAUTION:
Run the engine at idle for at least one minute.

10. Repeat step 5 through 9 with selector lever in “L” and “R” positions.

Stall speed: 2,430 - 2,730 rpm

Judgement stall test

	Selector lever position		Possible cause
	D, L	R	
Stall rotation	H	O	● Line pressure is low (pressure control solenoid valve A malfunction, primary regulator valve malfunction) ● Forward clutch (slipping) ● One-way clutch No. 2
	O	H	● Line pressure is low (pressure control solenoid valve A malfunction, primary regulator valve malfunction) ● Direct clutch (slipping) ● 1st and reverse brake (slipping)
	L	L	● Engine or torque converter one-way clutch
	H	H	● Line pressure is low (pressure control solenoid valve A malfunction, primary regulator valve malfunction) ● B5 brake (slipping) ● Oil pump ● Oil strainer (clogging) ● Oil leak for each range circuit

O: Stall speed within standard value position
H: Stall speed higher than standard value
L: Stall speed lower than standard value

TIME LAG TEST

Time lag test procedure

1. Inspect the amount of engine oil. Replenish the engine oil if necessary.
2. Drive for about 10 minutes to warm up the vehicle so that the A/T fluid temperature is 50 to 80°C (122 to 176°F). Check the amount of A/T fluid. Replenish if necessary.
3. Switch of A/C and light etc. are off.

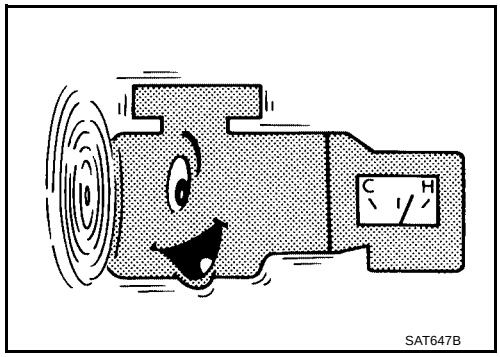

4. Securely engage the parking brake so that the tires do not turn.
5. Engine start, apply foot brake.
6. Measure time lag by using stopwatch from moment when shift lever is shifted in “N” to “D” position and “N” to “R” position until moment slightly shock can be felt.

CAUTION:
- **Make sure to take 3 measurement and take the average value.**
- **Make sure to keep interval for more than one minute between time lag tests.**
  (That purpose is to remove clutch/brake pressure was left unfinished.)

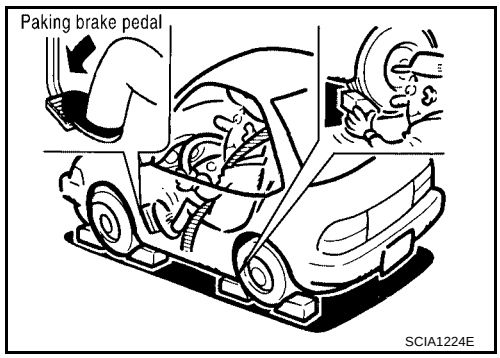

Time lag:

"N" to "D" position: Less than 0.7 sec.

"N" to "R" position: Less than 1.2 sec.

Judgement time lag test

Result of time lag test	Possible cause
Longer than standards "N" to "D" position	● Line pressure is low (pressure control solenoid valve A malfunction, primary regulator valve malfunction) ● Forward clutch (slipping) ● One-way clutch No. 2 ● Oil leak for "D" range circuit
Longer than standards "N" to "R" position	● Line pressure is low ● Direct clutch (slipping) ● 1st and reverse brake (slipping) ● Oil leak for "R" range circuit ● Oil pump ● Oil strainer (clogging)

LINE PRESSURE TEST

Line pressure test port

Location of line pressure test port is show in the figure.

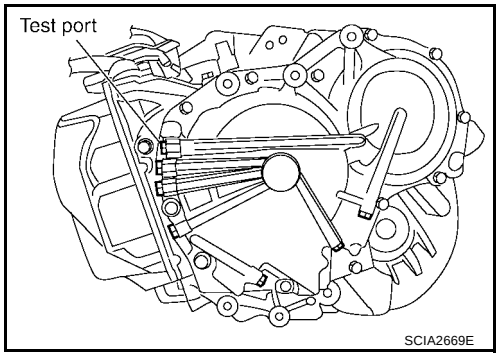

Line pressure test procedure

1. Inspect the amount of engine oil and replenish if necessary.
2. Drive the car for about 10 minutes to warm it up so that the A/T fluid reaches in range of 50 to 80°C (122 to 176°F), then inspect the amount of A/T fluid and replenish if necessary.

   NOTE:
   The automatic fluid temperature rises in range of 50 to 80°C (122 to 176°F) during 10 minutes of driving.
3. Switch of A/C and light etc. are off.
4. After warming up A/T, remove the oil pressure detection plug and install the oil pressure gauge [SST: (J-34301-C)] and adapter [SST: (J-45542)].

   CAUTION:
   Make sure to check no oil leak after installing oil pressure gage.
5. Securely engage the parking brake so that the tires do not turn.

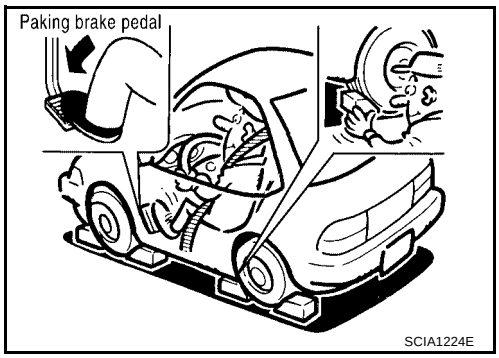

6. Start the engine, then measure the line pressure at both idle and the stall speed.

   CAUTION:
   - **Keep the brake pedal pressed all the way down during measurement.**
   - **When measuring the line pressure at the stall speed, refer to AT-422, "STALL TEST" .**

7. After the measurements are complete, install the oil pressure detection plug and tighten to the specified torque.

   :7.4 N·m (0.75 kg-m, 65 in-lb)

   CAUTION:
   Do not reuse O-ring.

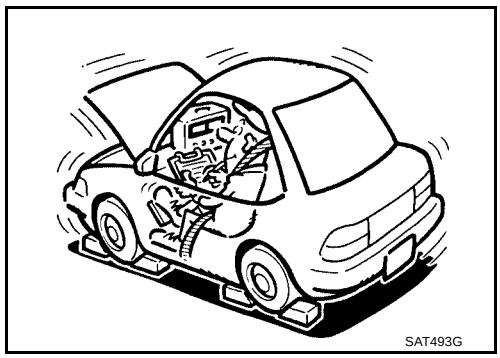

Line pressure

Engine speed	Line pressure kPa (kg/cm^2 , psi)	
	D, L positions	R position
At idle speed	333 - 392 (3.4 - 4.0, 48 - 57)	500 - 608 (5.1 - 6.2, 73 - 88)
At stall speed	1,285 - 1,393 (13.1 - 14.2, 186 - 202)	1,706 - 1,981 (17.4 - 20.2, 247 - 287)

Judgement of line pressure test

Judgement	Possible cause
Higher than standards both “D”, “L” and “R” positions	● Pressure control solenoid valve A malfunction ● Primary regulator valve malfunction
Lower than standards both “D”, “L” and “R” positions	● Pressure control solenoid valve A malfunction ● Primary regulator valve malfunction ● Oil pump malfunction ● B5 bake malfunction ● Oil leak for each range circuit malfunction
Lower than standards only “D” position	● Oil leak for “D” range circuit malfunction ● Forward clutch malfunction
Lower than standards only “R” position	● Oil leak for “R” range circuit malfunction ● Direct clutch malfunction ● 1st and reverse brake malfunction

ROAD TEST

Description

- The road test inspects overall performance of the A/T and analyzes possible malfunction causes.
- The road test is perform in the following three stages.

1. Check before engine is started. Refer to AT-426 .
2. Check at idle. Refer to AT-426 .
3. Cruise test
   - Inspect all the items from Part 1 to Part 3. Refer to AT-428 , AT-429 , AT-430 .

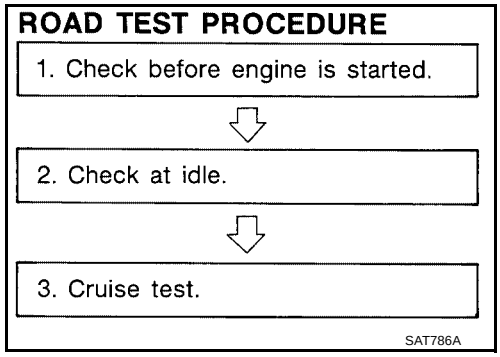

- Before beginning the road test, check the test procedure and inspection items.
- Test all inspection items until the symptom is uncovered. Diagnose NG items when all road tests are complete.

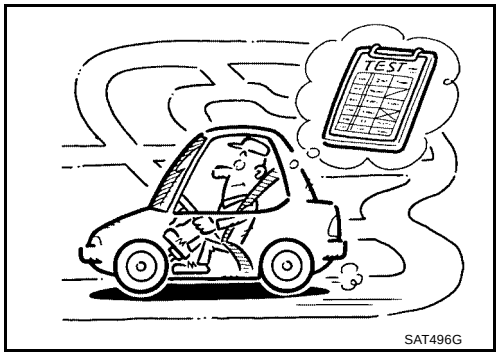

Check Before Engine is Started

UCS000TO

1. CHECK O/D OFF INDICATOR LAMP

1. Park vehicle on level surface.
2. Move selector lever to “P” position.
3. Turn ignition switch “OFF” and wait at least 10 seconds.
4. Turn ignition switch “ON”. (Do not start engine.)

Does O/D OFF indicator lamp light up for about 2 seconds?

YES >> 1. Turn ignition switch “OFF”.
2. Perform the self-diagnostics and record all NG items on the diagnostics worksheet. Refer to AT-448, "Diagnostic Procedure" .
3. Go to AT-426, "Check at Idle" .

No >> Stop the road test and go to AT-578, "O/D OFF Indicator Lamp Does Not Come On" .

Check at Idle

UCS000TP

1. CHECK STARTING THE ENGINE

1. Park vehicle on level surface.
2. Move selector lever to “P” position.
3. Turn ignition switch “OFF”.
4. Turn ignition switch “START”.

Does the engine start?

YES >> GO TO 2.
No >> Stop the road test and go to AT-580, "Engine Cannot Be Started In “P” or “N” Position" .

2. CHECK STARTING THE ENGINE

1. Push and hold shift lock release button.
2. Move selector lever in “D”, “L” or “R” position.
3. Turn ignition switch “START”.

Does the engine start in either position?

YES >> Stop the road test and go to AT-580, "Engine Cannot Be Started In “P” or “N” Position" .
No >> GO TO 3.

3. CHECK “P” POSITION FUNCTIONS

1. Move selector lever to “P” position.
2. Turn ignition switch “OFF”.
3. Release the parking brake.
4. Push the vehicle forward or backward.
5. Engage the parking brake.

When you push the vehicle with disengaging the parking brake, does it move?

YES >> Enter a check mark at “In P position, vehicle moves when pushed” on the diagnostics worksheet, then continue the road test.
No >> GO TO 4.

4. CHECK “N” POSITION FUNCTIONS

1. Start the engine.
2. Move selector lever to “N” position.
3. Release the parking brake.

Does vehicle move forward or backward?

YES >> Enter a check mark at “In N position, vehicle moves” on the diagnostics worksheet, then continue the road test.
No >> GO TO 5.

5. CHECK SHIFT SHOCK

1. Engage the brake.
2. Move selector lever to “D” position.

When the transaxle is shifted from “N” to “D”, is there an excessive shock?

YES >> Enter a check mark at “Large shock when shifted from N to D position” on the diagnostics worksheet, then continue the road test.
No >> GO TO 6.

6. CHECK “R” POSITION FUNCTIONS

1. Engage the brake.
2. Move selector lever to “R” position.
3. Disengage the brake for 4 to 5 seconds.

Does the vehicle creep backward?

YES >> GO TO 7.
No >> Enter a check mark at “Vehicle does not creep backward in R position” on the diagnostics worksheet, then continue the road test.

7. CHECK “D” AND “L” POSITIONS FUNCTIONS

Inspect whether the vehicle moves forward when the transaxle is put into the “D” and “L” positions.

Does the vehicle move forward in the “D” and “L” positions?

YES >> Go to AT-428, "Cruise Test - Part 1" , AT-429, "Cruise Test - Part 2" , and AT-430, "Cruise Test - Part 3" .
No >> Enter a check mark at “Vehicle does not creep forward in D or L position” on the diagnostics worksheet, then continue the road test.

Cruise Test - Part 1

UCS000TQ

1. CHECK STARTING OUT FROM D1

1. Drive the vehicle for about 10 minutes to warm up the engine oil and A/T fluid.
   Appropriate temperature for the A/T fluid: 50 - 80°C (122 - 176°F)
2. Park the vehicle on a level surface.
3. Move selector lever to “P” position.
4. Start the engine.
5. Move selector lever to “D” position.
6. Press the accelerator pedal about half way down to accelerate the vehicle.

With CONSULT-II

Read off the gear positions.

Starts from D1?

YES >> GO TO 2.
No >> Enter a check mark at “Vehicle cannot be started from D1” on the diagnostics worksheet, then continue the road test.

2. CHECK SHIFT-UP D1 → D2

Press down the accelerator pedal about half way and inspect if the vehicle shifts up (D1 → D2) at the appropriate speed.

- Refer to AT-432 .

With CONSULT-II

Read the gear position, throttle degree of opening, and vehicle speed.

Does the A/T shift-up D1 → D2 at the correct speed?

YES >> GO TO 3.
No >> Enter a check mark at “A/T does not shift D1 → D2” on the diagnostics worksheet, then continue the road test.

3. CHECK SHIFT-UP D2 → D3

Press down the accelerator pedal about half way and inspect if the vehicle shifts up (D2 → D3) at the appropriate speed.

- Refer to AT-432 .

With CONSULT-II

Read the gear position, throttle degree of opening, and vehicle speed.

Does the A/T shift-up D2 → D3 at the correct speed?

YES >> GO TO 4.
No >> Enter a check mark at “A/T does not shift D2 → D3” on the diagnostics worksheet, then continue the road test.

4. CHECK SHIFT-UP D3 → D4

Press down the accelerator pedal about half way and inspect if the vehicle shifts up (D3 → D4) at the appropriate speed.

- Refer to AT-432 .

With CONSULT-II

Read the gear position, throttle degree of opening, and vehicle speed.

Does the A/T shift-up D3 → D4 at the correct speed?

YES >> GO TO 5.
NO >> Enter a check mark at “A/T does not shift D3 → D4” on the diagnostics worksheet, then continue the road test.

5. CHECK SHIFT-UP D4 → D5

Press down the accelerator pedal about half way and inspect if the vehicle shifts up (D4 → D5) at the appropriate speed.

- Refer to AT-432 .

With CONSULT-II

Read the gear position, throttle degree of opening, and vehicle speed.

Does the A/T shift-up D4 → D5 at the correct speed?

YES >> GO TO 6.
NO >> Enter a check mark at “A/T does not shift D4 → D5” on the diagnostics worksheet, then continue the road test.

6. CHECK LOCK-UP

When releasing accelerator pedal from D5, check lock-up from D5 to L/U.

- Refer to AT-432 .

With CONSULT-II

Read the lock-up status.

Does it lock-up?

YES >> GO TO 7.
NO >> Enter a check mark at “A/T does not perform lock-up” on the diagnostics worksheet, then continue the road test.

7. CHECK LOCK-UP HOLD

Check lock–up hold.

Does it maintain lock-up status?

YES >> GO TO 8.
NO >> Enter a check mark at “A/T does not hold lock-up condition” on the diagnostics worksheet, then continue the road test.

8. CHECK LOCK-UP RELEASE

Check lock-up cancellation by depressing brake pedal lightly to decelerate.

With CONSULT-II

Read the lock-up status.

Does lock-up cancel?

YES >> 1. Stop the vehicle.
2. Go to Cruise test - Part 2 (Refer to AT-429).
NO >> Enter a check mark at “Lock-up is not released” on the diagnostics worksheet, then continue the road test. Go to Cruise test - Part 2 (Refer to AT-429).

Cruise Test - Part 2

UCS000TR

1. CHECK STARTING FROM D1

1. Move selector lever the “D” position.
2. Accelerate at half throttle.

With CONSULT-II

Read the gear position.

Does it start from D1?

YES >> GO TO 2.
NO >> Enter a check mark at “Vehicle cannot be started from D1” on the diagnostics worksheet, then continue the road test.

2. CHECK SHIFT-UP D1 → D2

Press the accelerator pedal down all the way and inspect whether or not the transaxle shifts up (D1 → D2) at the correct speed.

- Refer to AT-432 .

With CONSULT-II

Read the gear position, accelerator angle and vehicle speed.

Does the A/T shift-up D1 → D2 at the correct speed?

YES >> GO TO 3.
NO >> Enter a check mark at “A/T does not shift D1 → D2” on the diagnostics worksheet, then continue the road test.

3. CHECK SHIFT-UP D2 → D3

Press the accelerator pedal down all the way and inspect whether or not the transaxle shifts up (D2 → D3) at the correct speed.

- Refer to AT-432 .

With CONSULT-II

Read the gear position, accelerator angle and vehicle speed.

Does the A/T shift-up D2 → D3 at the correct speed?

YES >> GO TO 4.
NO >> Enter a check mark at “A/T does not shift D2 → D3” on the diagnostics worksheet, then continue the road test.

4. CHECK SHIFT-UP D3 → D4 AND ENGINE BRAKE

When the transaxle changes speed D2 → D3, return the accelerator pedal.

Does the A/T shift-up D3 → D4 and apply the engine brake?

YES >> 1. Stop the vehicle.
2. Go to Cruise test - Part 3 (Refer to AT-430).
NO >> Enter a check mark at “A/T does not shift D3 → D4” on the diagnostics worksheet, then continue the road test.

Cruise Test - Part 3

UCS000TS

1. CHECK SHIFT DOWN (D5 TO D4)

1. Confirm lever switch is in OFF position. (O/D OFF indicator lamp “OFF”.)
2. Confirm gear selector lever is in D position.
3. Accelerate vehicle using half-throttle to D5.
4. Release accelerator pedal.
5. Push lever switch while driving in D5. (O/D OFF indicator lamp “ON” and A/T indicator “4”.)

With CONSULT-II

Read the gear position, throttle degree of opening, and vehicle speed.

Does A/T shift from D5 to D4?

YES >> GO TO 2.
NO >> Enter a check mark at “Vehicle does not shift: 5th gear → 4th gear, when lever switch OFF → ON” on diagnostics worksheet, then continue the road test.

2. CHECK SHIFT DOWN (D4 TO L3)

1. Driving in D4.
2. Move selector lever from D to L position while D4.
3. Release accelerator pedal.

With CONSULT-II

Read the gear position, throttle degree of opening, and vehicle speed.

Does A/T shift from D4 to L3?

YES >> GO TO 3.

NO >> Enter a check mark at “Vehicle does not shift: 4th gear → 3rd gear, when selector lever D → L position” on diagnostics worksheet, then continue the road test.

3. CHECK SHIFT DOWN (L3 TO L2)

1. Confirm lever switch is in OFF position. (A/T indicator “3”.)
2. Confirm gear selector lever is in L position.
3. Accelerate vehicle using half-throttle to L3.
4. Release accelerator pedal.
5. Push lever switch while driving in L3. (A/T indicator “2”.)

With CONSULT-II

Read the gear position, throttle degree of opening, and vehicle speed.

Does A/T shift from L3 to L2?

YES >> GO TO 4.

NO >> Enter a check mark at “Vehicle does not shift: 3rd gear → 2nd gear, when lever switch OFF → ON” on diagnostics worksheet, then continue the road test.

4. CHECK SHIFT DOWN (L2 TO L1)

Release accelerator pedal.

With CONSULT-II

Read the gear position, throttle degree of opening, and vehicle speed.

Does A/T shift from L2 to L1?

YES >> GO TO 5.

NO >> Enter a check mark at “Vehicle does not shift: 2nd gear → 1st gear, when release accelerator pedal” on diagnostics worksheet, then continue the road test.

5. CHECK ENGINE BRAKE

Depress and release accelerator pedal while driving in L1.

With CONSULT-II

Read the gear position.

Does engine braking effectively reduce speed in L1 position?

YES >> 1. Stop the vehicle.
2. Perform the self-diagnostics. Refer to AT-448, "Diagnostic Procedure" .

NO >> Enter a check mark at “Vehicle does not decelerate by engine brake” on the diagnostics worksheet, then continue trouble diagnosis.

Shift Schedule

UCS000TT

VEHICLE SPEED WHEN SHIFTING GEARS

Accelerator angle	Vehicle speed km/h (MPH) (Approx.)							
	D1 →D2	D2 →D3	D3 →D4	D4 →D5	D5 →D4	D4 →D3	D3 →D2	D2 →D1
100 %	67 (42)	105 (65)	170 (106)	241 (150)	230 (143)	160 (99)	92 (57)	45 (28)
90 %	67 (42)	105 (65)	170 (106)	241 (150)	230 (143)	160 (99)	92 (57)	45 (28)
80 %	65 (40)	100 (62)	152 (94)	227 (141)	178 (111)	142 (88)	86 (53)	45 (28)
70 %	53 (33)	80 (50)	125 (78)	185 (115)	147 (91)	137 (85)	68 (42)	38 (24)
60 %	46 (29)	71 (44)	106 (66)	156 (97)	108 (67)	78 (48)	46 (29)	22 (14)
50 %	43 (27)	67 (42)	97 (60)	145 (90)	98 (61)	68 (42)	40 (25)	18 (11)
40 %	38 (24)	60 (37)	89 (55)	130 (81)	89 (55)	56 (35)	30 (19)	13 (8)
30 %	33 (21)	50 (31)	70 (43)	108 (67)	68 (42)	45 (28)	25 (16)	12 (7)
20 %	23 (14)	35 (22)	49 (30)	77 (48)	49 (30)	32 (20)	22 (14)	8 (5)
10 %	17 (11)	29 (18)	39 (24)	58 (36)	44 (27)	32 (20)	22 (14)	8 (5)

VEHICLE SPEED WHEN PERFORMING AND RELEASING COMPLETE LOCK-UP

Accelerator angle	Vehicle speed km/h (MPH) (Approx.)	
	Lock-up “ON”	Lock-up “OFF”
50 %	190 (118)	137 (85)
15%	101 (63)	72 (45)
0 - 8 %	73 (45)	70 (43)

- Lock-up vehicle speed indicates the speed in D position.
- Perform lock-up inspection after warming up engine.
- Lock-up vehicle speed may vary depending on the driving conditions and circumstances.

VEHICLE SPEED WHEN PERFORMING AND RELEASING SLIP LOCK-UP

Accelerator angle	Gear position	Vehicle speed km/h (MPH) (Approx.)	
		Slip lock-up “ON”	Slip lock-up “OFF”
0 - 10 %	4th	45 (28)	42 (26)
	5th	58 (36)	55 (34)

- Slip lock-up vehicle speed indicates the speed in D position.
- Perform slip lock-up inspection after warming up engine.
- Slip lock-up vehicle speed may vary depending on the driving conditions and circumstances.

Symptom Chart

UCS002K4

Numbers are arranged in order of inspection.
Perform inspections starting with number one and work up.

CAUTION:

Do not remove or disassemble any RE5F22A model transaxle parts unless specified to do so in AT section.

Symptom	Condition	Diagnostic Item	Reference page
With selector lever in D position, driving is not possible.	ON vehicle	1. Fluid level and state	AT-422
		2. Control cable and PNP switch adjustment	AT-610, AT-608
		3. TCM	AT-439
		4. Pressure control solenoid valve A	AT-514
		5. Control valve assembly	AT-611
	OFF vehicle	6. Torque converter	AT-613
		7. Forward and direct clutch assembly	AT-628
		8. B5 brake	AT-657
		9. One-way clutch No.2	AT-628
With selector lever in R position, driving is not possible.	ON vehicle	1. Fluid level and state	AT-422
		2. Control cable and PNP switch adjustment	AT-610, AT-608
		3. TCM	AT-439
		4. Shift solenoid valve A	AT-519
		5. Shift solenoid valve B	AT-524
		6. Pressure control solenoid valve A	AT-514
		7. Control valve assembly	AT-611
	OFF vehicle	8. Torque converter	AT-628
		9. Forward and direct clutch assembly	AT-628
		10. 1st and reverse brake	AT-628
		11. B5 brake	AT-657
No shock at all or the clutch slips when vehicle changes speed.	ON vehicle	1. Fluid level and state	AT-422
		2. Control cable and PNP switch adjustment	AT-610, AT-608
		3. TCM	AT-439
		4. Shift solenoid valve A	AT-519
		5. Shift solenoid valve B	AT-524
		6. Shift solenoid valve E	AT-544
		7. Pressure control solenoid valve A	AT-514
		8. Pressure control solenoid valve C	AT-558
		9. Control valve assembly	AT-611
	OFF vehicle	10. Accumulator	AT-628
Time lag is large. (“N” →“ D” position)	ON vehicle	1. Fluid level and state	AT-422
		2. Actual engine torque signal	AT-483
		3. Turbine revolution sensor	AT-475
		4. TCM	AT-439
		5. Control valve assembly	AT-611
	OFF vehicle	6. Accumulator	AT-628
		7. Forward and direct clutch assembly	AT-628

Symptom	Condition	Diagnostic Item	Reference page
Time lag is large. (“N” →“ R” position)	ON vehicle	1. Fluid level and state	AT-422
		2. Actual engine torque signal	AT-483
		3. Turbine revolution sensor	AT-475
		4. TCM	AT-439
		5. Shift solenoid valve E	AT-544
		6. Control valve assembly	AT-611
	OFF vehicle	7. Forward and direct clutch assembly	AT-628
		8. 1st and reverse brake	AT-628
Engine does not start in “N”, “P” position.	ON vehicle	1. Ignition switch and starter	PG-4, SC-10
		2. Control cable adjustment	AT-610
		3. PNP switch	AT-459
Engine starts in positions other than “N” or “P”.	ON vehicle	1. Ignition switch and starter	PG-4, SC-10
		2. Control cable adjustment	AT-610
		3. PNP switch	AT-459
Engine stalls when selector lever shifted “N” → “D”, “R”.	ON vehicle	1. Fluid level and state	AT-422
		2. TCM	AT-439
		3. Shift solenoid valve D	AT-539
		4. Pressure control solenoid valve C	AT-558
		5. Control valve assembly	AT-611
Engine stall when vehicle slow down.	ON vehicle	1. Fluid level and state	AT-422
		2. TCM	AT-439
		3. Shift solenoid valve D	AT-539
		4. Shift solenoid valve E	AT-544
		5. Pressure control solenoid valve C	AT-558
		6. Control valve assembly	AT-611
Acceleration is extremely poor.	ON vehicle	1. Fluid level and state	AT-422
		2. Control cable and PNP switch adjustment	AT-610, AT-608
		3. Engine speed signal	AT-483
		4. Electric throttle control signal	AT-577
Gear does not change from $D_1 \rightarrow D_2$.	ON vehicle	1. Fluid level and state	AT-422
		2. TCM	AT-439
		3. Electric throttle control signal	AT-577
		4. Shift solenoid valve A	AT-519
		5. Shift solenoid valve B	AT-524
		6. Shift solenoid valve C	AT-529
		7. Shift solenoid valve D	AT-539
		8. Control valve assembly	AT-611
	OFF vehicle	9. 2nd coast brake	AT-648, AT-654
		10. 2nd brake	AT-648
		11. One-way clutch No.1	AT-654
		12. One-way clutch No.2	AT-628

Symptom	Condition	Diagnostic Item	Reference page
Gear does not change from D2 → D3 .	ON vehicle	1. Fluid level and state	AT-422
		2. TCM	AT-439
		3. Electric throttle control signal	AT-577
		4. Shift solenoid valve B	AT-524
		5. Shift solenoid valve C	AT-529
		6. Shift solenoid valve D	AT-539
		7. Pressure control solenoid valve A	AT-514
		8. Control valve assembly	AT-611
	OFF vehicle	9. U/D brake	AT-628
		10. B5 brake	AT-657
Gear does not change from D3 → D4 .	ON vehicle	1. Fluid level and state	AT-422
		2. TCM	AT-439
		3. Electric throttle control signal	AT-577
		4. Shift solenoid valve B	AT-524
		5. Shift solenoid valve C	AT-529
		6. Shift solenoid valve D	AT-539
		7. Control valve assembly	AT-611
	OFF vehicle	8. U/D clutch	AT-628
		9. U/D brake	AT-628
Gear does not change from D4 → D5 .	ON vehicle	1. Fluid level and state	AT-422
		2. TCM	AT-439
		3. Electric throttle control signal	AT-577
		4. Shift solenoid valve B	AT-524
		5. Shift solenoid valve C	AT-529
		6. Control valve assembly	AT-611
	OFF vehicle	7. Forward and direct clutch assembly	AT-628
		8. 2nd coast brake	AT-648, AT-654
		9. One-way clutch No.1	AT-654
In D range, does not downshift to 1st gear.	ON vehicle	1. Fluid level and state	AT-422
		2. TCM	AT-439
		3. Electric throttle control signal	AT-577
		4. Shift solenoid valve A	AT-519
		5. Shift solenoid valve B	AT-524
		6. Shift solenoid valve C	AT-529
		7. Shift solenoid valve D	AT-539
		8. Control valve assembly	AT-611
	OFF vehicle	9. 2nd coast brake	AT-648, AT-654
		10. 2nd brake	AT-648
		11. One-way clutch No.1	AT-654
		12. One-way clutch No.2	AT-628

Symptom	Condition	Diagnostic Item	Reference page
In D range, does not downshift to 2nd gear.	ON vehicle	1. Fluid level and state	AT-422
		2. TCM	AT-439
		3. Electric throttle control signal	AT-577
		4. Shift solenoid valve B	AT-524
		5. Shift solenoid valve C	AT-529
		6. Shift solenoid valve D	AT-539
		7. Pressure control solenoid valve A	AT-514
		8. Control valve assembly	AT-611
	OFF vehicle	9. U/D brake	AT-628
		10. B5 brake	AT-657
In D range, does not downshift to 3rd gear.	ON vehicle	1. Fluid level and state	AT-422
		2. TCM	AT-439
		3. Electric throttle control signal	AT-577
		4. Shift solenoid valve B	AT-524
		5. Shift solenoid valve C	AT-529
		6. Shift solenoid valve D	AT-539
		7. Control valve assembly	AT-611
	OFF vehicle	8. U/D clutch	AT-628
		9. U/D brake	AT-628
In D range, does not downshift to 4th gear.	ON vehicle	1. Fluid level and state	AT-422
		2. TCM	AT-439
		3. Electric throttle control signal	AT-577
		4. Shift solenoid valve B	AT-524
		5. Shift solenoid valve C	AT-529
		6. Control valve assembly	AT-611
	OFF vehicle	7. Forward and direct clutch assembly	AT-628
		8. 2nd coast brake	AT-648, AT-654
		9. One-way clutch No.1	AT-654
Does not lock-up or lock-up is not released.	ON vehicle	1. Fluid level and state	AT-422
		2. Stop lamp switch signal	AT-598
		3. ATF temperature sensor	AT-465
		4. TCM	AT-439
		5. Shift solenoid valve C	AT-529
		6. Shift solenoid valve D	AT-539
		7. Pressure control solenoid valve C	AT-558
		8. Control valve assembly	AT-611
	OFF vehicle	9. Torque converter	AT-613

Symptom	Condition	Diagnostic Item	Reference page
Engine brake does not work.	ON vehicle	1. Fluid level and state	AT-422
		2. TCM	AT-439
		3. Shift solenoid valve E	AT-544
		4. Electric throttle control signal	AT-577
		5. Control valve assembly	AT-611
	OFF vehicle	6. 2nd coast brake	AT-648, AT-654
		7. U/D brake	AT-628
		8. B5 brake	AT-657
Shift point is high or low.	ON vehicle	1. Pressure control solenoid valve A	AT-514
		2. Engine speed signal	AT-483
		3. Electric throttle control signal	AT-577
		4. Revolution sensor	AT-479
		5. TCM	AT-439
		6. Control valve assembly	AT-611
Large shock. (“N” →“ D” position)	ON vehicle	1. Fluid level and state	AT-422
		2. Actual engine torque signal	AT-483
		3. Turbine revolution sensor	AT-475
		4. ATF temperature sensor	AT-465
		5. Shift solenoid valve A	AT-519
		6. Shift solenoid valve B	AT-524
		7. Pressure control solenoid valve A	AT-514
		8. TCM	AT-439
		9. Control valve assembly	AT-611
	OFF vehicle	10. Accumulator	AT-628
		11. Forward and direct clutch assembly	AT-628
Large shock. (“N” →“ R” position)	ON vehicle	1. Fluid level and state	AT-422
		2. Actual engine torque signal	AT-483
		3. Turbine revolution sensor	AT-475
		4. ATF temperature sensor	AT-465
		5. Shift solenoid valve E	AT-544
		6. Pressure control solenoid valve B	AT-549
		7. TCM	AT-439
		8. Control valve assembly	AT-611
	OFF vehicle	9. Forward and direct clutch assembly	AT-628
		10. 1st and reverse brake	AT-628

Symptom	Condition	Diagnostic Item	Reference page
Shock is too large when shift up.	ON vehicle	1. Fluid level and state	AT-422
		2. Actual engine torque signal	AT-483
		3. Turbine revolution sensor	AT-475
		4. ATF temperature sensor	AT-465
		5. TCM power input signal	AT-572
		6. Shift solenoid valve A	AT-519
		7. Shift solenoid valve B	AT-524
		8. Shift solenoid valve C	AT-529
		9. Shift solenoid valve D	AT-539
		10. Shift solenoid valve E	AT-544
		11. Pressure control solenoid valve A	AT-514
		12. Pressure control solenoid valve B	AT-549
		13. Pressure control solenoid valve C	AT-558
		14. TCM	AT-439
		15. Control valve assembly	AT-611
Shock is too large for coast down.	ON vehicle	1. Fluid level and state	AT-422
		2. Actual engine torque signal	AT-483
		3. Turbine revolution sensor	AT-475
		4. ATF temperature sensor	AT-465
		5. TCM power input signal	AT-572
		6. Shift solenoid valve A	AT-519
		7. Shift solenoid valve B	AT-524
		8. Shift solenoid valve C	AT-529
		9. Shift solenoid valve D	AT-539
		10. Shift solenoid valve E	AT-544
		11. Pressure control solenoid valve A	AT-514
		12. Pressure control solenoid valve B	AT-549
		13. Pressure control solenoid valve C	AT-558
		14. TCM	AT-439
		15. Control valve assembly	AT-611

Symptom	Condition	Diagnostic Item	Reference page
Shock is too large for kick down.	ON vehicle	1. Fluid level and state	AT-422
		2. Actual engine torque signal	AT-483
		3. Turbine revolution sensor	AT-475
		4. ATF temperature sensor	AT-465
		5. TCM power input signal	AT-572
		6. Shift solenoid valve A	AT-519
		7. Shift solenoid valve B	AT-524
		8. Shift solenoid valve C	AT-529
		9. Shift solenoid valve D	AT-539
		10. Shift solenoid valve E	AT-544
		11. Pressure control solenoid valve A	AT-514
		12. Pressure control solenoid valve B	AT-549
		13. Pressure control solenoid valve C	AT-558
		14. TCM	AT-439
		15. Control valve assembly	AT-611
Strange noise in “R”,“N” or“ D” position.	ON vehicle	1. Fluid level and state	AT-422
		2. Control valve assembly	AT-611
	OFF vehicle	3. Torque convertor	AT-628
		4. Parking component	AT-614
		5. Gear system	AT-628
With selector lever in P position, vehicle does not enter parking condition or, with selector lever in another position, parking condition is not cancelled.	ON vehicle	1. PNP switch	AT-459
		2. Control cable adjustment	AT-610
		3. Control valve assembly	AT-611
	OFF vehicle	4. Parking component	AT-614
Vehicle runs with transaxle in “ P” position.	ON vehicle	1. Fluid level and state	AT-422
		2. PNP switch	AT-459
		3. Control cable and PNP switch adjustment	AT-610, AT-608
		4. Line pressure test	AT-424
Vehicle runs with transaxle in “N” position.	ON vehicle	1. Fluid level and state	AT-422
		2. PNP switch	AT-459
		3. Control cable and PNP switch adjustment	AT-610, AT-608
		4. Line pressure test	AT-424

TCM Input/Output Signal Reference Values

UCS000TX

TCM TERMINAL CONNECTOR LAYOUT

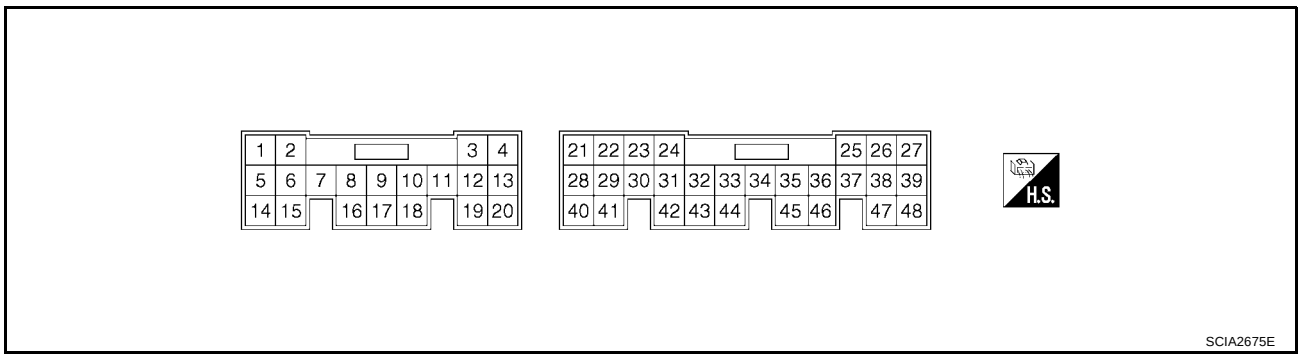

TCM INSPECTION TABLE

Data are reference value and are measured between each terminal and ground.

Terminal	Wire color	Item	Condition		Data (Approx.)
1	Y/W	A/T PV IGN relay		When turning ignition switch ON.	0 - 1.5V
				When turning ignition switch OFF.	0V
3	L	CAN H	–		–
4	Y	CAN L	–		–
14	B	Ground	–		0V
16	O	Lever switch		Lever switch: “ON” position	0V
				Lever switch: “OFF” position	Battery voltage
21	G/B	Pressure control solenoid valve B ground		When engine is running with idle speed and setting selector lever to “P” position.	0V
22	L	Revolution sensor power supply		When turning ignition switch ON.	Battery voltage
				When turning ignition switch OFF.	0V
23	G	Turbine revolution sensor power supply		When turning ignition switch ON.	Battery voltage
				When turning ignition switch OFF.	0V
24	BR	PNP switch A		Selector lever: “P”, “R” and “L” position	0V
				Other than the above	Battery voltage
25	G/R	Shift solenoid valve B		When shift solenoid valve B operates. (When driving in 1st or 5th gear.)	Battery voltage
				When shift solenoid valve B does not operate.	0V
26	G	Shift solenoid valve D		When shift solenoid valve D operates. (When driving in 3rd, 4th or 5th gear.)	Battery voltage
				When shift solenoid valve D does not operate.	0V
27	Y/R	Power supply (Memory back-up)		When turning ignition switch ON.	Battery voltage
				When turning ignition switch OFF.	Battery voltage
28	W	Pressure control solenoid valve C ground		When engine is running with idle speed and setting selector lever to “P” position.	0V

Terminal	Wire color	Item	Condition		Data (Approx.)
29	R	Revolution sensor		When moving at 20 km/h (12 MPH) in 1st gear.	119Hz
30	R	Turbine revolution sensor		When moving at 20 km/h (12 MPH) in 1st gear.	371Hz
31	G/Y	PNP switch B		Selector lever: “R”, “N”, “D” and “L” position	0V
				Other than the above	Battery voltage
32	P/B	PNP switch C		Selector lever: “D” and “L” position	0V
				Other than the above	Battery voltage
33	R/V	PNP switch PN		Selector lever: “P” and “N” position	Battery voltage
				Other than the above	0V
34	P	Power supply		When turning ignition switch ON.	Battery voltage
				When turning ignition switch OFF.	0V
35	L/Y	Pressure control solenoid valve A		When engine is running with idle speed and setting selector lever to “P” position.	300Hz
36	W/L	Pressure control solenoid valve B		When engine is running with idle speed and setting selector lever to “P” position.	300Hz
37	R/B	Shift solenoid valve C		When shift solenoid valve C operates. (When driving in 1st, 2nd, 3rd or reverse gear.)	Battery voltage
				When shift solenoid valve C does not operate.	0V
38	Y/B	Power supply (A/T PV IGN relay)		When turning ignition switch ON.	Battery voltage
				Measure 3 seconds after switching “OFF” the ignition switch.	0V
39	Y/B	Power supply (A/T PV IGN relay)		When turning ignition switch ON.	Battery voltage
				Measure 3 seconds after switching “OFF” the ignition switch.	0V
40	L/G	Pressure control solenoid valve A ground		When engine is running with idle speed and setting selector lever to “P” position.	0V
41	R/Y	Fluid temperature sensor		When ATF temperature 0°C (32°F)	4.0V
				When ATF temperature 20°C (68°F)	3.0V
				When ATF temperature 80°C (176°F)	0.8V
				When ATF temperature 100°C (212°F)	0.5V
42	LG/B	Fluid temperature sensor ground	–		0V
43	V/W	PNP switch PA		Selector lever: “P”, “N” and “L” position	0V
				Other than the above	Battery voltage

Terminal	Wire color	Item	Condition		Data (Approx.)
45	O/B	Pressure control solenoid valve C		When engine is running with idle speed and setting selector lever to “P” position.	300Hz
46	W/G	Shift solenoid valve A		When shift solenoid valve A operates. (When driving in 1st gear.)	Battery voltage
				When shift solenoid valve A does not operate.	0V
47	BR/Y	Shift solenoid valve E		When shift solenoid valve E operates. (When driving in reverse gear.)	Battery voltage
				When shift solenoid valve E does not operate.	0V
48	B	Ground	–		0V

CONSULT-II Function (TCM)

UCS000TY

CONSULT-II can display each diagnostic item using the diagnostic test modes shown following.

TCM diagnostic mode	Description
WORK SUPPORT	Supports inspections and adjustments. Commands are transmitted to the TCM for setting the status suitable for required operation, input/output signals are received from the TCM and received data is displayed.
SELF-DIAG RESULTS	Displays TCM self-diagnosis results.
DATA MONITOR	Displays TCM input/output data in real time.
CAN DIAG SUPPORT MNTR	The result of transmit/receive diagnosis of CAN communication can be read.
ACTIVE TEST	Operation of electrical loads can be checked by sending drive signal to them.
FUNCTION TEST	Conducted by CONSULT-II instead of a technician to determine whether each system is "OK" or "NG".
ECU PART NUMBER	TCM part number can be read.

After performing “SELF-DIAGNOSTIC PROCEDURE (WITH CONSULT-II)” (Refer to AT-443), place check marks for results on the AT-417, "DIAGNOSTIC WORKSHEET" . Reference pages are provided following the items.

NOTICE:

1. The CONSULT-II electrically displays shift timing and lock-up timing (that is, operation timing of each solenoid).
   Check for time difference between actual shift timing and the CONSULT-II display. If the difference is noticeable, mechanical parts (except solenoids, sensors, etc.) may be malfunctioning. Check mechanical parts using applicable diagnostic procedures.
2. Shift schedule (which implies gear position) displayed on CONSULT-II and that indicated in Service Manual may differ slightly. This occurs because of the following reasons:

- Actual shift schedule has more or less tolerance or allowance,
- Shift schedule indicated in Service Manual refers to the point where shifts start, and
- Gear position displayed on CONSULT-II indicates the point where shifts are completed.

3. Display of solenoid valves on CONSULT-II changes at the start of shifting, while gear position is displayed upon completion of shifting (which is computed by TCM).

CONSULT-II SETTING PROCEDURE

CAUTION:

If CONSULT-II is used with no connection of CONSULT-II CONVERTER, malfunctions might be detected in self-diagnosis depending on control unit which carries out CAN communication.

- For details, refer to the separate “CONSULT-II Operations Manual”.

1. Turn ignition switch “OFF”.
2. Connect CONSULT-II and CONSULT-II CONVERTER to data link connector, which is located in driver instrument panel (lower).
3. Turn ignition switch “ON”.

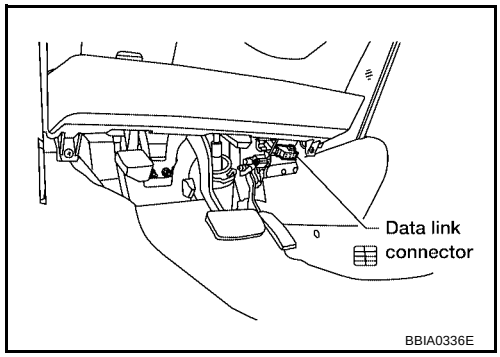

4. Touch “START (NISSAN BASED VHCL)”.

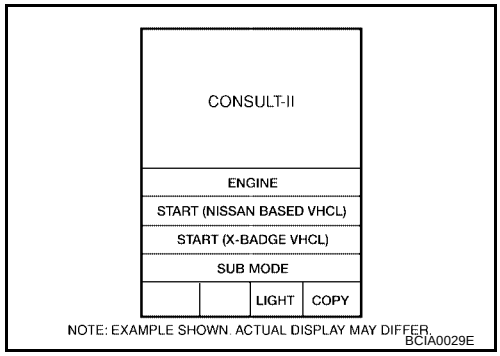

5. Touch “A/T”.
   If “A/T” is not indicated, go to GI-37, "CONSULT-II Data Link Connector (DLC) Circuit" .
6. Perform each diagnostic test mode according to each service procedure.

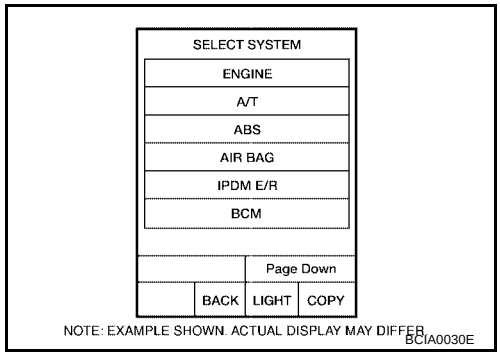

WORK SUPPORT MODE

Work item

Work item	Condition	Usage
INITIALIZATION	Under the following conditions. ● Ignition switch “ON”. ● Selector lever “P” or “N” position. ● Engine not running. ● Vehicle speed is 0 km/h (0 MPH). ● Ignition voltage is more than 10.5V. ● Malfunction was not detected.	Use to initialize TCM in a case of replacing transaxle or TCM. Refer to AT-376, "Precautions for A/T Assembly or TCM Replacement" .

SELF-DIAG RESULT MODE

Operation procedure

1. Perform “CONSULT-II SETTING PROCEDURE”. Refer to AT-443, "CONSULT-II SETTING PROCEDURE" .

2. Touch “SELF-DIAG RESULTS”.
   Display shows malfunction experienced since the last erasing operation.

   NOTE:
   - **The details for “TIME” are as follow:**
   - **“CRNT”: Error currently detected with TCM.**
   - **“PAST”: Error detected in the past and memorized with TCM.**
   - **Touch “F.F.DATA” on “SELF-DIAG RESULTS” screen to display freeze frame data. Freeze frame data shows driving condition when malfunction is detected.**
     For freeze frame data items, refer to AT-446, "Display item list" .

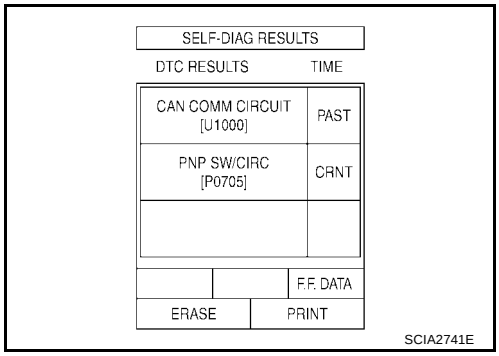

Display item list

X: Applicable —: Not applicable

Items (CONSULT-II screen terms)	Malfunction is detected when...	TCM self-diagnosis		OBD-II (DTC)
		O/D OFF indicator lamp*3	“TRANSMISSION” with CONSULT-II	MIL indicator lamp*1 , “ENGINE” with CONSULT-II or GST
CAN COMM CIRCUIT	● When a malfunction is detected in CAN communications	X	U1000*4	U1000*4
VEH SPD SE/CIR-MTR	● ECM detects a malfunction in vehicle speed sensor signal, after that TCM inputs the result by CAN communication.	X	P0500	P0500
TCM PROCESSOR	● TCM processor is malfunctioning.	—	P0613	—
PNP SW/CIRC	● PNP switch signals input with impossible pattern	X	P0705	P0705
ATF TEMP SEN/ CIRC	● Normal voltage is not applied to ATF temperature sensor due to open, short, and so on. ● During running, the ATF temperature sensor signal voltage is excessively high or low.	X	P0710	P0710
FLUID TEMP SEN	● ATF temperature signal does not change.	—	P0711	P0711*2
TURBINE SENSOR	● Signal from turbine revolution sensor does not input due to open, short, and so on. ● Unexpected signal input during running.	X	P0717	P0717
VHCL SPEED SEN-A/T	● Signal from revolution sensor does not input due to open, short, and so on. ● Unexpected signal input during running.	X	P0722	P0722
ENG SPD INP PERFOR	● Malfunction is detected in engine speed signal, actual engine torque signal or torque reduction signal that is output from ECM through CAN communication.	X	P0726	P0726
A/T 1ST GR FNCTN	● A/T cannot be shifted to the 1st gear position even if electrical circuit is good.	X	P0731	P0731*2
A/T 2ND GR FNCTN	● A/T cannot be shifted to the 2nd gear position even if electrical circuit is good.	X	P0732	P0732*2
A/T 3RD GR FNCTN	● A/T cannot be shifted to the 3rd gear position even if electrical circuit is good.	X	P0733	P0733*2
A/T 4TH GR FNCTN	● A/T cannot be shifted to the 4th gear position even if electrical circuit is good.	X	P0734	P0734*2
A/T 5TH GR FNCTN	● A/T cannot be shifted to the 5th gear position even if electrical circuit is good.	X	P0735	P0735*2
A/T TCC S/V FNCTN	● A/T cannot perform lock-up even if electrical circuit is good.	X	P0744	P0744*2

Items (CONSULT-II screen terms)	Malfunction is detected when...	TCM self-diagnosis		OBD-II (DTC)
		O/D OFF indicator lamp*3	"TRANSMISSION" with CONSULT-II	MIL indicator lamp*1 , "ENGINE" with CONSULT-II or GST
PC SOL A(L/PRESS)	● Normal voltage is not applied to solenoid due to open, short, and so on. ● TCM detects as irregular by comparing target value with monitor value.	X	P0745	P0745
SHIFT SOL A		X	P0750	P0750
SHIFT SOL B		X	P0755	P0755
SHIFT SOL C		X	P0760	P0760
SFT SOL C STUCK ON	● Condition of shift solenoid valve C is different from monitor value, and relation between gear position and actual gear ratio is irregular.	X	P0762	P0762*2
SHIFT SOL D	● Normal voltage is not applied to solenoid due to open, short, and so on. ● TCM detects as irregular by comparing target value with monitor value.	X	P0765	P0765
SHIFT SOL E		X	P0770	P0770
PC SOL B(SFT/PRS)		X	P0775	P0775
SHIFT	● No rotation change occurs between input (turbine revolution sensor) and output (revolution sensor) and shifting time is long. ● Shifting ends immediately. ● Condition in malfunction engine revs up usually shifting.	X	P0780	P0780*2
PC SOL C(TCC&SFT)	● Normal voltage is not applied to solenoid due to open, short, and so on. ● TCM detects as irregular by comparing target value with monitor value.	X	P0795	P0795
PC SOL C STC ON	● Condition of pressure control solenoid valve C is different from monitor value, and relation between gear position and actual gear ratio or lock-up status is irregular.	X	P0797	P0797*2
GEAR LEVER SWITCH	● Lever switch signal is incorrectly input due to open, short, and so on.	—	P0825	—
TCM POWER INPT SIG	● Voltage supplied to TCM is too low.	—	P0882	P0882
ELEC TH CONTROL	● The electric throttle control system for ECM is in a malfunction, after that TCM inputs the result by CAN commnication.	X	P1726	P1726
NO DTC IS DETECTED. FURTHER TESTING MAY BE REQUIRED.	● No NG item has been detected.	—	X	X

*1: Refer to AT-411, "Malfunction Indicator Lamp (MIL)" .
*2: These malfunctions cannot be displayed MIL if another malfunction is assigned to MIL.
*3: Indicate it when performing TCM SELF-DIAGNOSTIC PROCEDURE (NO TOOLS). Refer to AT-450, "TCM SELF-DIAGNOSTIC PROCEDURE (NO TOOLS)" .
*4: If DTC U1000 is displayed with other DTCs, first perform the trouble diagnosis for DTC U1000. Refer to AT-452 .

CAN DIAGNOSTIC SUPPORT MONITOR

Operation procedure

1. Perform "CONSULT-II SETTING PROCEDURE". Refer to AT-443, "CONSULT-II SETTING PROCEDURE" .

2. Touch “CAN DIAGNOSTIC SUPPORT MONITOR”.

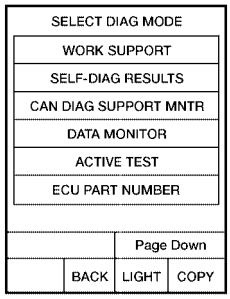

NOTE: EXAMPLE SHOWN. ACTUAL DISPLAY MAY DIFFER.
BCIA0031E

DATA MONITOR MODE

Operation procedure

1. Perform “CONSULT-II SETTING PROCEDURE”. Refer to AT-443, "CONSULT-II SETTING PROCEDURE" .
2. Touch “DATA MONITOR”.

   NOTE:
   When malfunction is detected, CONSULT-II performs REAL-TIME DIAGNOSIS.
   Also, any malfunction detected while in this mode will be displayed at real time.

Display item list

X: Standard —: Not applicable

Monitored item (Unit)	Monitor item selection			Remarks
	ECU INPUT SIGNALS	MAIN SIGNALS	SELECTION FROM MENU	
VHCL/S SE-A/T (km/h)	X	X	X	Vehicle speed recognized by the TCM.
VHCL/S SE-MTR* (km/h)	X	—	X	
FLUID TEMP SE* (V)	X	—	X	
FLUID TEMP* (°C)	—	—	X	
COOLAN TEMP* (°C)	—	—	X	Displays status of engine coolant temperature. Signal input with CAN communication line.
BATTERY VOLT* (V)	X	—	X	
ENGINE SPEED* (rpm)	X	X	X	Signal input with CAN communication line.
TURBINE REV* (rpm)	X	—	X	Turbine revolution computed from signal of turbine revolution sensor is displayed.
OUTPUT REV* (rpm)	—	—	X	Output revolution computed from signal of revolution sensor is displayed.
PNP SW A* (ON/OFF)	X	—	X	
PNP SW B* (ON/OFF)	X	—	X	
PNP SW C* (ON/OFF)	X	—	X	
PNP SW PA* (ON/OFF)	X	—	X	
PNP SW PN (ON/OFF)	X	—	X	
MANU MODE SW* (ON/OFF)	X	—	X	Not mounted but displayed.
NON M-MODE SW* (ON/OFF)	X	—	X	
UP SW* (ON/OFF)	X	—	X	
DOWN SW* (ON/OFF)	X	—	X	
RANGE SLCT SW (ON/OFF)	X	—	X	This means lever switch.
BRAKE SW* (ON/OFF)	X	—	X	This means stop lamp switch signal via CAN communication line.

Monitored item (Unit)	Monitor item selection			Remarks
	ECU INPUT SIGNALS	MAIN SIGNALS	SELECTION FROM MENU	
CLSO THL POS (ON/OFF)	X	—	X	Signal input with CAN communication line.
ASCD SIGNAL (ON/OFF)	X	—	X	
ASCD OD OFF (ON/OFF)	X	—	X	
ABS SIGNAL (ON/OFF)	X	—	X	
TCS SIGNAL (ON/OFF)	X	—	X	
TCS GEAR HOLD (ON/OFF)	X	—	X	
TCS SFT CNG (ON/OFF)	—	—	X	Requests TCM for shift schedule change.
LOCK-UP* (ON/OFF)	—	—	X	Always “ON” during lock-up, regardless of types.
SLCT LVR POSI*	—	—	X	Displays “##” when TCM can not judge selector lever position.
MANU GR POSI	—	—	X	Always displays “##”.
GEAR*	—	—	X	Indicates current gear position. When setting in P or N position, indicate by shift solenoid valves. When setting in R position, displays “1”. Displays “##” when TCM can not judge gear position.
NEXT GR POSI	—	—	X	Displays “##” when TCM can not judge gear position.
REDCT DEM SIG (ON/OFF)	—	—	X	Displays status of engine torque reduction demand signal.
TC SLIP RATIO	—	—	X	
SLIP REV (rpm)	—	—	X	Difference between engine speed and torque converter input shaft speed.
ACCELE ANGLE* (%)	X	X	X	Degree of opening for accelerator recognized by the TCM. For fail-safe operation, the specific value used for control is displayed.
PC SOL A OUT* (A)	—	—	X	
PC SOL A MON* (A)	—	X	X	
PC SOL B OUT* (A)	—	—	X	
PC SOL B MON* (A)	—	X	X	
PC SOL C OUT* (A)	—	—	X	
PC SOL C MON* (A)	—	X	X	
SFT SOL A OUT* (ON/OFF)	—	—	X	
SFT SOL B OUT* (ON/OFF)	—	—	X	
SFT SOL C OUT* (ON/OFF)	—	—	X	
SFT SOL D OUT* (ON/OFF)	—	—	X	
SFT SOL E OUT* (ON/OFF)	—	—	X	
SFT SOL A MON* (ON/OFF)	—	X	X	
SFT SOL B MON* (ON/OFF)	—	X	X	
SFT SOL C MON* (ON/OFF)	—	X	X	
SFT SOL D MON* (ON/OFF)	—	X	X	
SFT SOL E MON* (ON/OFF)	—	X	X	

Monitored item (Unit)	Monitor item selection			Remarks
	ECU INPUT SIGNALS	MAIN SIGNALS	SELECTION FROM MENU	
G-RATE (G)	—	—	X	
F-SAFE MODE (OK/1 to 10)	—	X	X	Numbers indicate types of fail-safe modes. Refer to AT-413, "Fail-safe mode list" .
VDC SIGNAL (ON/OFF)	X	—	X	Signal input with CAN communication line.
SHIFT SCHDULE	—	—	X	The details for data of shift schedule are as follow: NOR: Normal mode UP1: Upslope 1 mode UP2: Upslope 2 mode (steeper then “UP1”) DOWN: Downslope mode HOT1: Hot 1 mode HOT2: Hot 2 mode (higher temperature than “HOT1”)
Voltage (V)	—	—	X	Displays the value measured by the voltage probe.
Frequency (Hz)	—	—	X	The value measured by the pulse probe is displayed.
DUTY-HI (high) (%)	—	—	X	
DUTY-LOW (low) (%)	—	—	X	
PLS WIDTH-HI (ms)	—	—	X	
PLS WIDTH-LOW (ms)	—	—	X	

*: Also, the items appear on CONSULT-II screen in freeze frame data mode of self-diagnostic results only if DTC is detected. For details, refer to AT-443, "SELF-DIAG RESULT MODE" .

ACTIVE TEST MODE

Test item

Test item	Condition	Description
SHIFT SOLENOID A	Under the following conditions. ● Ignition switch “ON” ● Selector lever “P” or “N” position ● Engine not running ● Vehicle speed is 0 km/h (0 MPH). ● Ignition voltage is more than 10.5V. ● Malfunction was not detected.*	Each shift solenoid operate ON/OFF by receiving the drive signal.
SHIFT SOLENOID B		
SHIFT SOLENOID C		
SHIFT SOLENOID D		
SHIFT SOLENOID E		
PRESSURE CONTROL SOL A		Each pressure control solenoid is activated by receiving the drive signal.
PRESSURE CONTROL SOL B		
PRESSURE CONTROL SOL C		

*: Except when P0711, P0731, P0732, P0733, P0734, P0735, P0744, P0762, P0780 or P0797 is detected.

NOTE:
Approximately 10 seconds after the operation is begun, “TEST IS STOPPED” will be displayed.

Diagnostic Procedure

UCS000TZ

OBD-II SELF-DIAGNOSTIC PROCEDURE (WITH CONSULT-II)

Refer to EC-114, "CONSULT-II Function" .

OBD-II SELF-DIAGNOSTIC PROCEDURE (WITH GST)

Refer to EC-127, "Generic Scan Tool (GST) Function" .

OBD-II SELF-DIAGNOSTIC PROCEDURE (NO TOOLS)

Refer to EC-71, "Malfunction Indicator Lamp (MIL)" .

TCM SELF-DIAGNOSTIC PROCEDURE (WITH CONSULT-II)

Refer to AT-443, "SELF-DIAG RESULT MODE" .

TCM SELF-DIAGNOSTIC PROCEDURE (NO TOOLS)

Description

As a method for locating the suspect system, when the self-diagnostics start signal is input, the memory for the malfunction location is output and the O/D OFF indicator lamp flashes to display the corresponding DTC.

Diagnostic procedure

1. CHECK O/D OFF INDICATOR LAMP

1. Start the engine with selector lever in “P” position. Warm engine to normal operating temperature.
2. Turn ignition switch “ON” and “OFF” at least twice, then leave it in the “OFF” position.
3. Wait 10 seconds.
4. Turn ignition switch “ON”. (Do not start engine.)

Does O/D OFF indicator lamp come on for about 2 seconds?

YES >> GO TO 2.
NO >> GO TO AT-578, "O/D OFF Indicator Lamp Does Not Come On" .

2. JUDGEMENT PROCEDURE

NOTE:
After turning ignition switch “ON” (at step 6), perform within 2 seconds (while O/D OFF indicator lamp come on.).

1. Turn ignition switch “OFF”.
2. Push shift lock release button.
3. Move selector lever from “P” to “D” position.
4. Release accelerator pedal. (Set the closed throttle position signal “ON”.)
5. Depress brake pedal. (Stop lamp switch signal “ON”.)
6. Turn ignition switch “ON”.
7. Move the selector lever to the “N” position and release brake pedal. (Stop lamp switch signal “OFF”.)
8. Move the selector lever to “D” position and depress brake pedal. (Stop lamp switch signal “ON”.)
9. Release brake pedal. (Stop lamp switch signal “OFF”.)
10. Depress accelerator pedal fully and release it.

>> GO TO 3.

3. CHECK SELF-DIAGNOSIS CODE

Check O/D OFF indicator lamp.
Refer to AT-451, "Judgement self-diagnosis code" .
If the system does not go into self-diagnostics, refer to AT-598, "TCM Self-diagnosis Does Not Activate" .

>> **DIAGNOSIS END**

Judgement self-diagnosis code

When a malfunction is detected, the malfunction route is indicated by longer illumination of the indicator lamp.

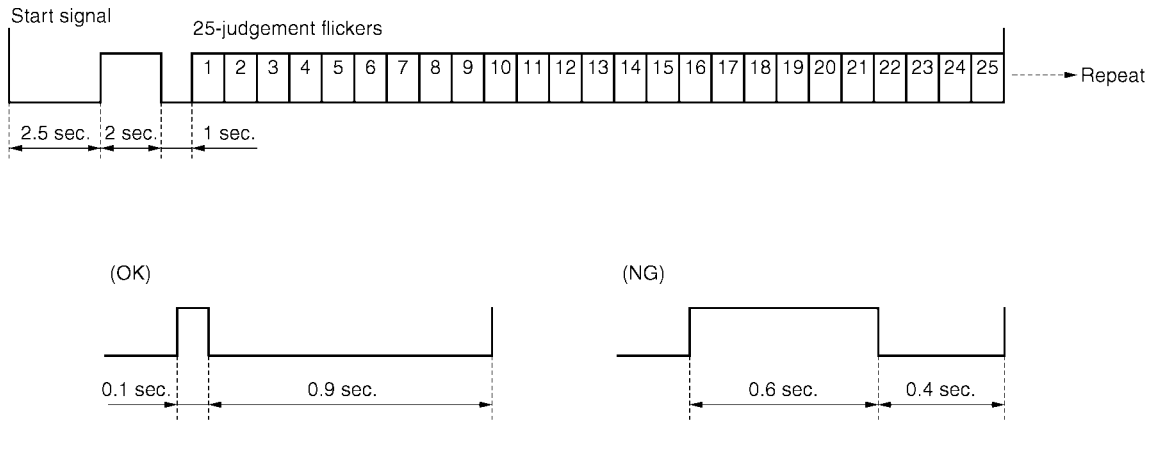

1	Revolution sensor	14	Engine speed signal
2	Turbine revolution sensor	15	Vehicle speed signal
3	Pressure control solenoid valve A	16	CAN communication
4	Pressure control solenoid valve B	17	1st gear function
5	Pressure control solenoid valve C	18	2nd gear function
6	Shift solenoid valve A	19	3rd gear function
7	Shift solenoid valve B	20	4th gear function
8	Shift solenoid valve C	21	5th gear function
9	Shift solenoid valve D	22	Shift solenoid valve C stuck ON
10	Shift solenoid valve E	23	Shift function
11	PNP switch	24	Lock-up function
12	A/T fluid temperature sensor	25	Pressure contnal solenoid valve C stuck ON
13	Electric throttle control system		

If the lamp flashes at 4Hz frequency, the most likely cause is EEP ROM error (Poor memory back up).

SCIA2758E

ERASE SELF-DIAGNOSIS

- In order to make it easier to find the cause of hard-to-duplicate malfunctions, malfunction information is stored into the control unit as necessary during use by the user. This memory is not erased no matter how many times the ignition switch is turned ON and OFF.
- However, this information is erased by turning ignition switch “OFF” after executing self-diagnostics or by erasing the memory using the CONSULT-II.

DTC U1000 CAN COMMUNICATION LINE

PFP:23710

Description

UCS000U0

CAN (Controller Area Network) is a serial communication line for real time application. It is an on-vehicle multiplex communication line with high data communication speed and excellent malfunction detection ability. Many electronic control units are equipped onto a vehicle, and each control unit shares information and links with other control units during operation (not independent). In CAN communication, control units are connected with 2 communication lines (CAN H line, CAN L line) allowing a high rate of information transmission with less wiring. Each control unit transmits/receives data but selectively reads required data only.

On Board Diagnosis Logic

UCS000U1

- This is an OBD-II self-diagnostic item.
- Diagnostic trouble code “CAN COMM CIRCUIT” with CONSULT-II or U1000 without CONSULT-II is detected when TCM cannot communicate to other control units.

Possible Cause

UCS000U2

Harness or connectors
(CAN communication line is open or shorted.)

DTC Confirmation Procedure

UCS000U3

NOTE:
If “DTC Confirmation Procedure” has been previously performed, always turn ignition switch “OFF” and wait at least 10 seconds before performing the next test.
After the repair, perform the following procedure to confirm the malfunction is eliminated.

WITH CONSULT-II

1. Turn ignition switch “ON”. (Do not start engine.)
2. Select “DATA MONITOR” mode for “A/T” with CONSULT-II.
3. Start engine.
4. Drive vehicle and maintain the following condition for at least 6 seconds.
   SLCT LVR POSI: “D” position
5. If DTC is detected, go to AT-454, "Diagnostic Procedure" .

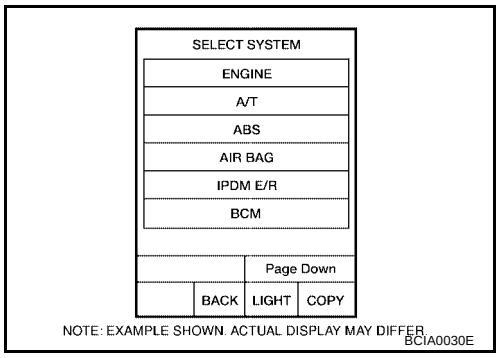

WITH GST

Follow the procedure “WITH CONSULT-II”.

Wiring Diagram — AT — CAN

UCS000U4

AT-CAN-01

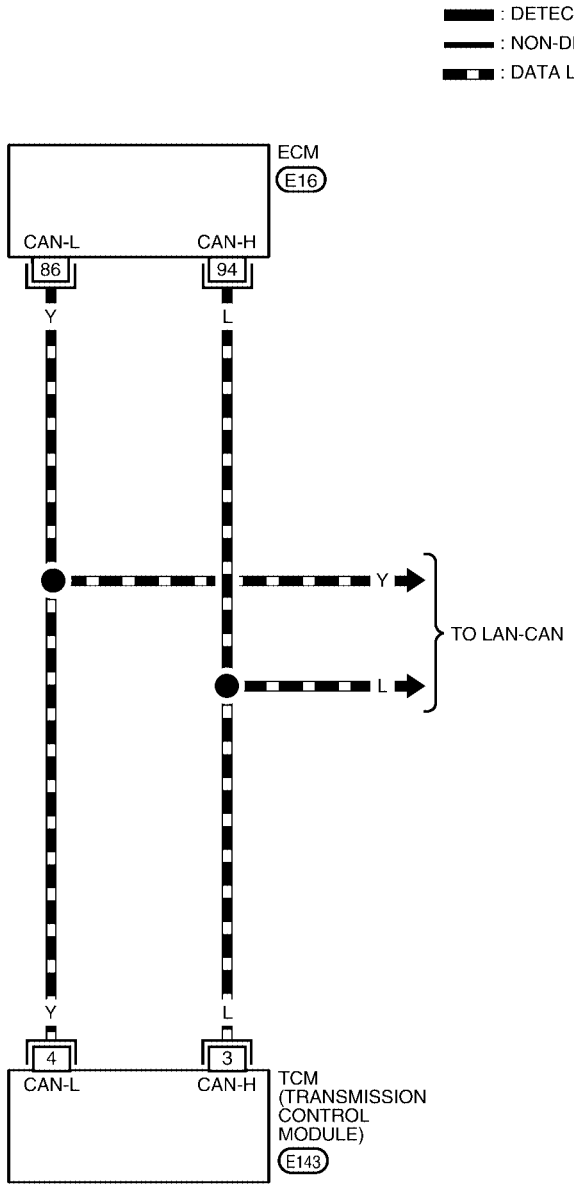

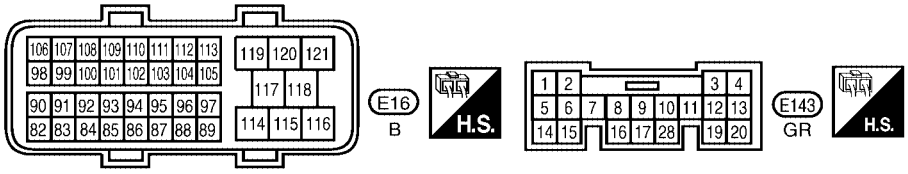

BCWA0421E

TCM terminals and data are reference value.

Terminal	Wire color	Item	Condition	Data (Approx.)
3	L	CAN H	–	–
4	Y	CAN L	–	–

Diagnostic Procedure

UCS000U5

1. CHECK CAN COMMUNICATION CIRCUIT

With CONSULT-II

1. Turn ignition switch “ON” and start engine.
2. Select “SELF-DIAG RESULTS” mode for “A/T” with in CONSULT-II.
3. The “CAN COMM CIRCUIT” is detected.

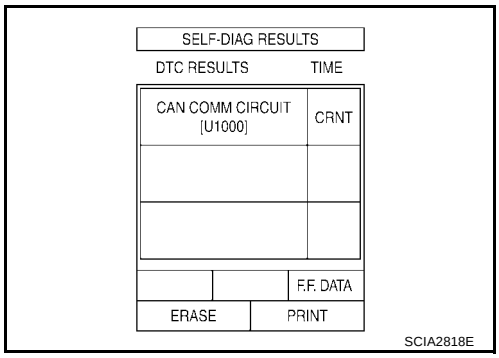

Yes or No?

Yes >> Print out CONSULT-II screen, GO TO LAN-4, "Precautions When Using CONSULT-II" .

No >> **INSPECTION END**

DTC P0500 VEHICLE SPEED SENSOR MTR

PFP:24814

Description

UCS0015A

The vehicle speed sensor·MTR signal is transmitted from combination meter to TCM by CAN communication line. The signal functions as an auxiliary device to the revolution sensor when it is malfunctioning. The TCM will then use the vehicle speed sensor·MTR signal.

On Board Diagnosis Logic

UCS0015B

- This is not an OBD-II self-diagnostic item.
- Diagnostic trouble code “VEH SPD SE/CIR-MTR” with CONSULT-II or 15th judgement flicker without CONSULT-II is detected when TCM does not receive the proper vehicle speed sensor MTR signal (input by CAN communication) from combination meter.

Possible Cause

UCS0015C

- Harness or connectors
  (The signal circuit is open or shorted.)
- Combination meter
- ABS actuator and electric unit (control unit)
- Wheel sensor

DTC Confirmation Procedure

UCS0015D

CAUTION:
Always drive vehicle at a safe speed.

NOTE:
If “DTC Confirmation Procedure” has been previously performed, always turn ignition switch “OFF” and wait at least 10 seconds before performing the next test.
After the repair, perform the following procedure to confirm the malfunction is eliminated.

WITH CONSULT-II

1. Turn ignition switch “ON” and select “DATA MONITOR” mode for “A/T” with CONSULT-II.
2. Start engine.
3. Drive vehicle and maintain the following conditions for at least 5 consecutive seconds.
   VHCL/S SE-A/T: 30 km/h (17 MPH) or more
   ACCELE ANGLE: 10 % or less
4. If DTC is detected, go to AT-456, "Diagnostic Procedure" .

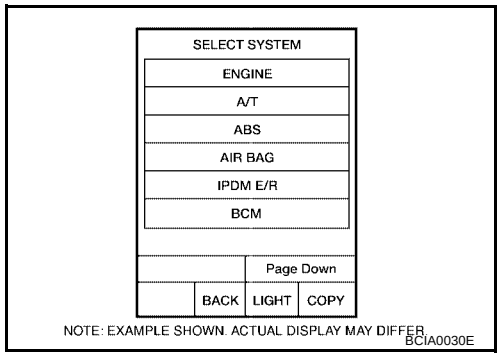

Diagnostic Procedure

UCS0015E

1. CHECK INPUT SIGNALS

With CONSULT-II

1. Start engine.
2. Select “DATA MONITOR” mode for “A/T” with CONSULT-II.
3. Drive vehicle, and then make sure that the values of “VHCL/S SE-A/T” and “VHCL/S SE-MTR” are same.

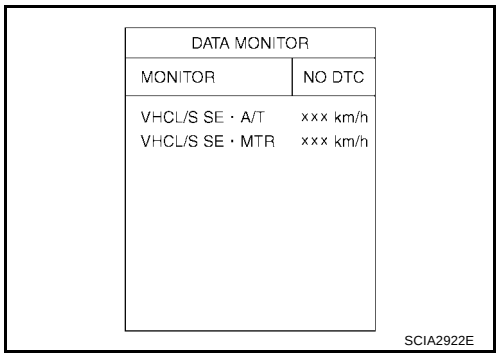

OK or NG

OK >> GO TO 4.
NG >> GO TO 2.

2. CHECK DTC WITH ABS ACTUATOR AND ELECTRIC UNIT (CONTROL UNIT)

Refer to BRC-11, "TROUBLE DIAGNOSIS" (with TCS/ABS) or BRC-55, "TROUBLE DIAGNOSIS" (with VDC/TCS/ABS).

OK or NG

OK >> GO TO 3.
NG >> If NG, recheck pin terminals for damage or loose connection with harness connector.

3. CHECK DTC WITH COMBINATION METER

Refer to DI-5, "COMBINATION METERS" .

OK or NG

OK >> GO TO 4.
NG >> If NG, recheck pin terminals for damage or loose connection with harness connector.

4. CHECK DTC

Perform “DTC Confirmation Procedure”. Refer to AT-455, "DTC Confirmation Procedure" .

OK or NG

OK >> **INSPECTION END**
NG >> GO TO 5.

5. CHECK TCM

1. Check TCM input/output signal.
2. If NG, recheck TCM pin terminals for damage or loose connection with harness connector.

OK or NG

OK >> **INSPECTION END**
NG >> Repair or replace damaged parts.

DTC P0613 TCM PROCESSOR

PFP:31036

Description

UCS0011Q

The TCM consists of a microcomputer and connectors for signal input and output and for power supply. The TCM controls the A/T.

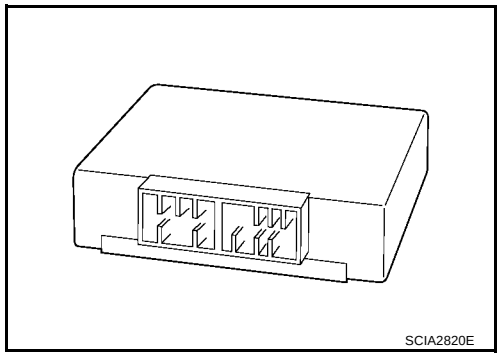

On Board Diagnosis Logic

UCS0011R

- This is not an OBD-II self-diagnostic item.
- Diagnostic trouble code “TCM PROCESSOR” with CONSULT-II is detected when TCM processor is malfunctioning.

Possible Cause

UCS0011S

TCM

DTC Confirmation Procedure

UCS0011T

NOTE:
If “DTC Confirmation Procedure” has been previously performed, always turn ignition switch “OFF” and wait at least 10 seconds before performing the next test.
After the repair, perform the following procedure to confirm the malfunction is eliminated.

WITH CONSULT-II

1. Turn ignition switch “ON”. (Do not start engine.)
2. Select “DATA MONITOR” mode for “A/T” with CONSULT-II.
3. Start engine.
4. Run engine for at least 2 consecutive seconds at idle speed.
5. If DTC is detected, go to AT-458, "Diagnostic Procedure" .

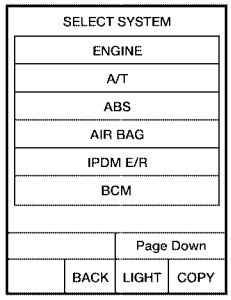

NOTE: EXAMPLE SHOWN. ACTUAL DISPLAY MAY DIFFER.
BCIA0030E

Diagnostic Procedure

UCS0011U

1. CHECK DTC

With CONSULT-II

1. Turn ignition switch “ON”. (Do not start engine.)
2. Select “SELF-DIAG RESULTS” mode for “A/T” with CONSULT-II.
3. Touch “ERASE”.
4. Turn ignition switch “OFF” and wait at least 10 seconds.
5. Perform DTC confirmation procedure, AT-457, "DTC Confirmation Procedure" .

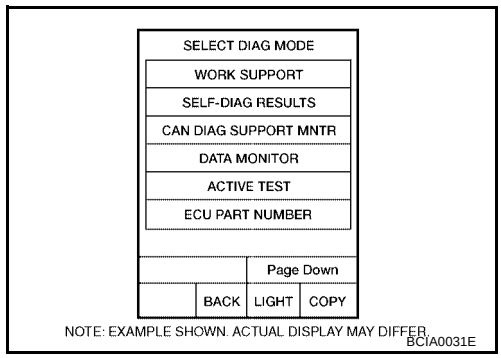

Is the “TCM PROCESSOR” displayed again?

YES >> Replace TCM.
NO >> **INSPECTION END**

DTC P0705 PARK/NEUTRAL POSITION SWITCH

PFP:32006

Description

UCS000UC

- The park/neutral position (PNP) switch includes a transmission range switch.
- The transmission range switch detects the selector lever position and sends a signal to the TCM.
- TCM judges the selector lever position by the park/neutral position (PNP) switch signal.

Selector lever	PNP switch A	PNP switch B	PNP switch C	PNP switch PA	PNP switch PN
P	ON	OFF	OFF	ON	ON
R	ON	ON	OFF	OFF	OFF
N	OFF	ON	OFF	ON	ON
D	OFF	ON	ON	OFF	OFF
L	ON	ON	ON	ON	OFF

On Board Diagnosis Logic

UCS000UD

- This is an OBD-II self-diagnostic item.
- Diagnostic trouble code “PNP SW/CIRC” with CONSULT-II or P0705 without CONSULT-II is detected when PNP switch signals input with impossible pattern.

Possible Cause

UCS000UE

- Harness or connectors
  [The park/neutral position (PNP) switch and TCM circuit is open or shorted.]
- Park/neutral position (PNP) switch

DTC Confirmation Procedure

UCS000UF

NOTE:
If “DTC Confirmation Procedure” has been previously performed, always turn ignition switch “OFF” and wait at least 10 seconds before performing the next test.
After the repair, perform the following procedure to confirm the malfunction is eliminated.

WITH CONSULT-II

1. Turn ignition switch “ON”. (Do not start engine.)
2. Select “DATA MONITOR” mode for “A/T” with CONSULT-II.
3. Move selector lever to each position.
   SLCT LVR POSI: “P”, “R”, “N”, “D” or “L” position
4. Wait for at least 5 consecutive seconds at each position.
5. If DTC is detected, go to AT-462, "Diagnostic Procedure" .

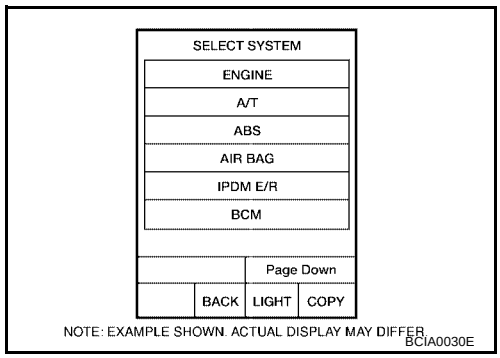

WITH GST

Follow the procedure “With CONSULT-II”.

Wiring Diagram — AT — PNP/SW

UCS000UG

AT-PNP/SW-01

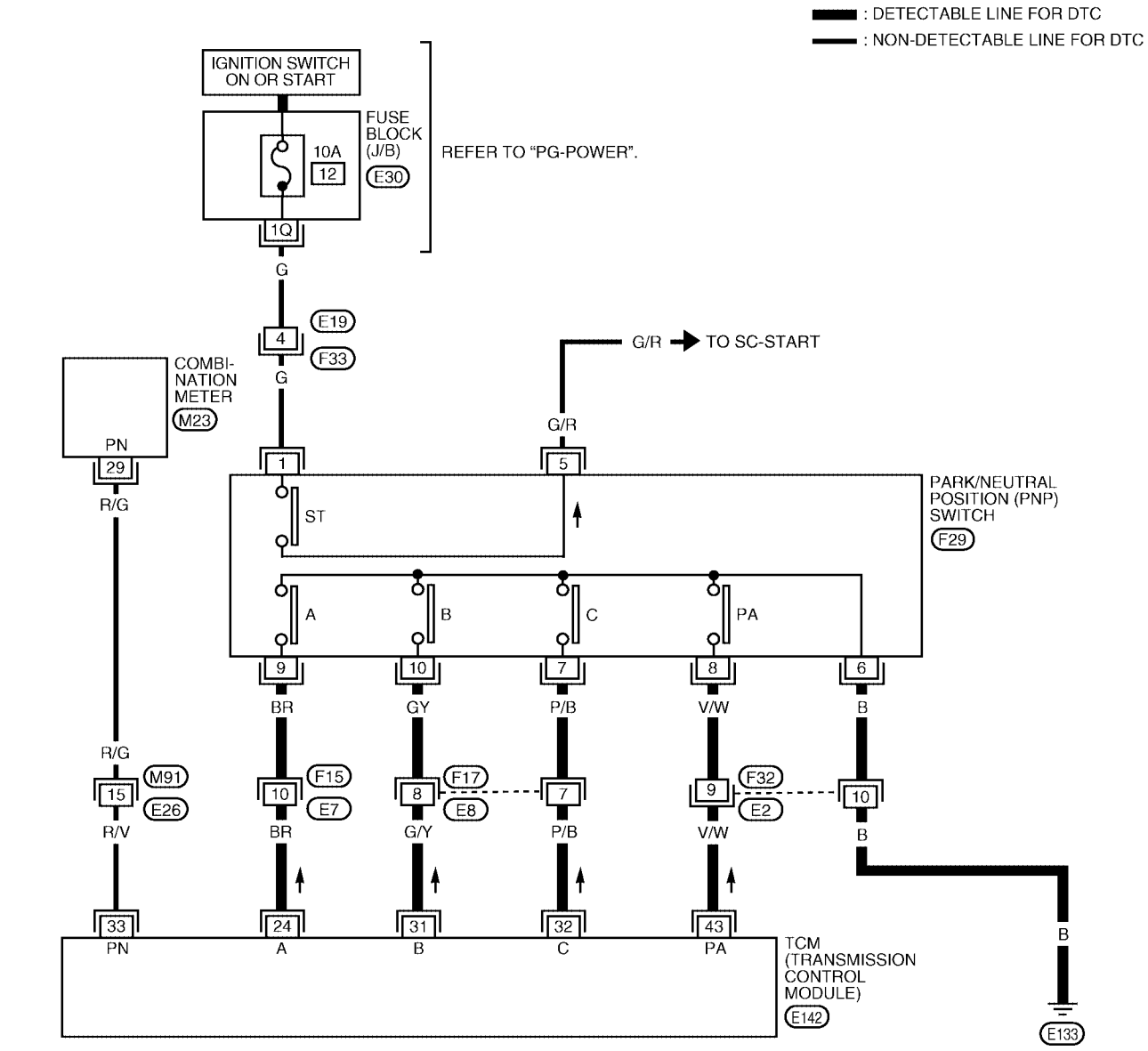

BCWA0193E

TCM terminals and data are reference value. Measured between each terminal and ground.

Terminal	Wire color	Item	Condition		Data (Approx.)
24	BR	PNP switch A		Selector lever: “P”, “R” and “L” position	0V
				Other than the above	Battery voltage
31	G/Y	PNP switch B		Selector lever: “R”, “N”, “D” and “L” position	0V
				Other than the above	Battery voltage
32	P/B	PNP switch C		Selector lever: “D” and “L” position	0V
				Other than the above	Battery voltage
33	R/V	PNP switch PN		Selector lever: “P” and “N” position	Battery voltage
				Other than the above	0V
43	V/W	PNP switch PA		Selector lever: “P”, “N” and “L” position	0V
				Other than the above	Battery voltage

Diagnostic Procedure

UCS000UH

1. CHECK PNP SWITCH CIRCUIT

With CONSULT-II

1. Turn ignition switch “ON”. (Do not start engine.)
2. Select “DATA MONITOR” mode for “A/T” with CONSULT-II.
3. Move selector lever to “P”, “R”, “N”, “D” and “L” position and check the value of “PNP SW A”, “PNP SW B”, “PNP SW C”, “PNP SW PA” and “PNP SW PN”.

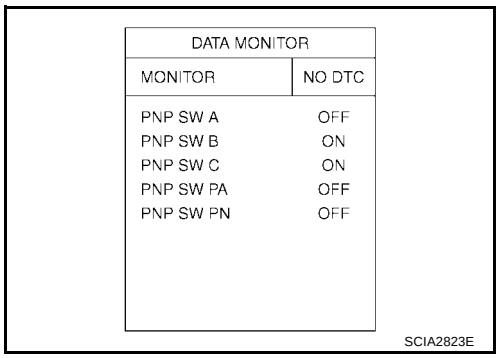

Selector lever	“PNP SW A”	“PNP SW B”	“PNP SW C”	“PNP SW PA”	“PNP SW PN”
P	ON	OFF	OFF	ON	ON
R	ON	ON	OFF	OFF	OFF
N	OFF	ON	OFF	ON	ON
D	OFF	ON	ON	OFF	OFF
L	ON	ON	ON	ON	OFF

Without CONSULT-II

1. Turn ignition switch “ON”. (Do not start engine.)
2. Move selector lever to “P”, “R”, “N”, “D” and “L” position and check voltage between the TCM connector terminals and ground.

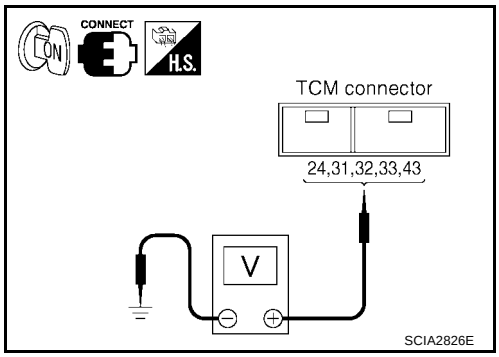

Selector lever	Connector No.		E142		
	Terminal (Wire color)				
	24 (BR) - Ground	31 (G/Y) - Ground	32 (P/B) - Ground	33 (P/V) - Ground	43 (V/W) - Ground
P	0V	Battery voltage	Battery voltage	Battery voltage	0V
R	0V	0V	Battery voltage	0V	Battery voltage
N	Battery voltage	0V	Battery voltage	Battery voltage	0V
D	Battery voltage	0V	0V	0V	Battery voltage
L	0V	0V	0V	0V	0V

OK or NG

OK >> GO TO 5.
NG >> GO TO 2.

2. CHECK PNP SWITCH POWER SOURCE CIRCUIT

1. Turn ignition switch “OFF”.
2. Disconnect the PNP switch connector.
3. Turn ignition switch “ON”. (Do not start engine.)
4. Check the voltage between PNP switch connector terminal 1 and ground.

Connector	Terminal (Wire color)	Voltage
F29	1 (G) - Ground	Battery voltage

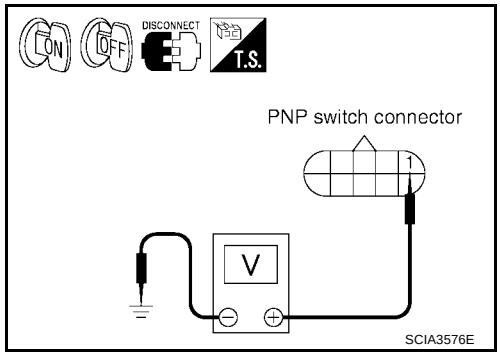

5. Turn ignition switch “OFF”.
6. Check voltage between PNP switch connector terminal 1 and ground.

Connector	Terminal (Wire color)	Voltage
F29	1 (G) - Ground	0V

7. If OK, check harness for short-circuit to ground or power source.

OK or NG

OK >> GO TO 3.
NG >> Check the following. If any items are damaged, repair or replace damaged parts.
- Harness for short or open between ignition switch and PNP switch
- Ignition switch and fuse
  Refer to PG-4, "POWER SUPPLY ROUTING CIRCUIT" .

3. CHECK HARNESS BETWEEN TCM AND PNP SWITCH

1. Turn ignition switch “OFF”.
2. Disconnect the TCM connector and PNP switch connector.
3. Check continuity between TCM connector terminals 24, 31, 32, 43 and ground.

Connector	Terminal (Wire color)	Condition	Continuity
E142	24 (BR) - Ground	Selector lever: “P”, “R” and “L” position	Yes
		Other than the above	No
	31 (G/Y) - Ground	Selector lever: “R”, “N”, “D” and “L” position	Yes
		Other than the above	No
	32 (P/B) - Ground	Selector lever: “D” and “L” position	Yes
		Other than the above	No
	43 (V/W) - Ground	Selector lever: “P”, “N” and “L” position	Yes
		Other than the above	No

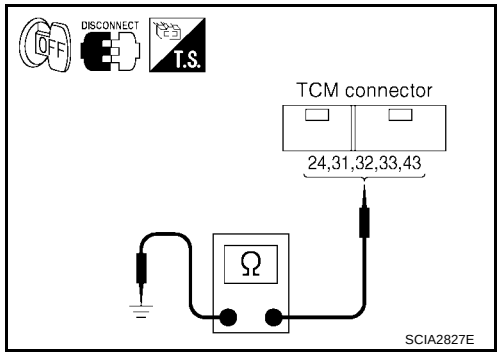

4. If OK, check the following.
- Harness for short-circuit to ground or power source.
- Open or short-circuit in the harness between combination meter and TCM.

OK or NG

OK >> GO TO 5.
NG >> GO TO 4.

4. DETECT MALFUNCTIONING ITEM

Check the following.

- Open or short-circuit in the harness between TCM and PNP switch A, B, C, PA.
- Open or short-circuit in the harness for ground of PNP switch.
- PNP switch. Refer to AT-464, "Component Inspection" .

OK or NG

OK >> GO TO 6.
NG >> Repair or replace damaged parts.

5. CHECK DTC

Perform “DTC Confirmation Procedure”. Refer to AT-459, "DTC Confirmation Procedure" .

OK or NG

OK >> **INSPECTION END**
NG >> GO TO 6.

6. CHECK TCM

1. Check TCM input/output signal. Refer to AT-439, "TCM Input/Output Signal Reference Values" .
2. If NG, recheck TCM pin terminals for damage or loose connection with harness connector.

OK or NG

OK >> **INSPECTION END**
NG >> Repair or replace damaged parts.

Component Inspection

UCS000UI

PNP SWITCH

1. Check continuity between PNP switch terminals while moving selector lever. Refer to the following table.

Circuit	Starter		Reverse		Position				
	+	−	+	−	−	A	B	C	PA
Terminal / Lever position	1	5	2	4	6	9	10	7	8
P	○—○				○—○				○
R			○—○		○—○		○		
N	○—○				○		○		○
D					○		○	○	
L					○	○	○	○	○

○—○ : Continuity

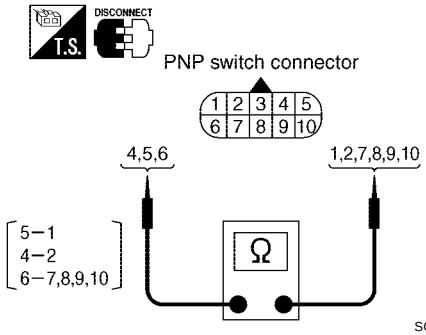

2. If NG, check again with control cable disconnected. (Refer to step 1 above.)
3. If OK on step 2, adjust control cable. Refer to AT-610, "Control Cable Adjustment" .
4. If NG on step 2, remove park/neutral position (PNP) switch from A/T and check continuity of park/neutral position (PNP) switch terminals. (Refer to step 1 above.)
5. If OK on step 4, adjust park/neutral position (PNP) switch. Refer to AT-608, "Park/Neutral Position (PNP) Switch Adjustment" .
6. If NG on step 4, replace park/neutral position (PNP) switch.

DTC P0710 A/T FLUID TEMPERATURE SENSOR CIRCUIT

PFP:31940

Description

UCS000W4

The A/T fluid temperature sensor detects the A/T fluid temperature and sends a signal to the TCM.

On Board Diagnosis Logic

UCS000W6

- This is an OBD-II self-diagnostic item.
- Diagnostic trouble code “ATF TEMP SEN/CIRC” with CONSULT-II or P0710 without CONSULT-II is detected under the following conditions.
  - When normal voltage not applied to ATF temperature sensor due to open, short, and so on.
  - When during running, the ATF temperature sensor signal voltage is excessively high or low.

Possible Cause

UCS000W7

- Harness or connectors
  (The sensor circuit is open or shorted.)
- A/T fluid temperature sensor

DTC Confirmation Procedure

UCS000W8

NOTE:
If “DTC Confirmation Procedure” has been previously performed, always turn ignition switch “OFF” and wait at least 10 seconds before performing the next test.
After the repair, perform the following procedure to confirm the malfunction is eliminated.

WITH CONSULT-II

1. Turn ignition switch “ON”. (Do not start engine.)
2. Select “DATA MONITOR” mode for “A/T” with CONSULT-II.
3. Start engine.
4. Warm up engine so that engine coolant temperature is more than 50°C (122°F).
   COOLAN TEMP: More than 50°C (122°F)
5. Maintain the following conditions for at least 16 minutes (Total). (It is not necessary to drive vehicle.)
   COOLAN TEMP: More than 50°C (122°F)
   SLCT LVR POSI: “D” position
6. If DTC is detected, go to AT-467, "Diagnostic Procedure" .

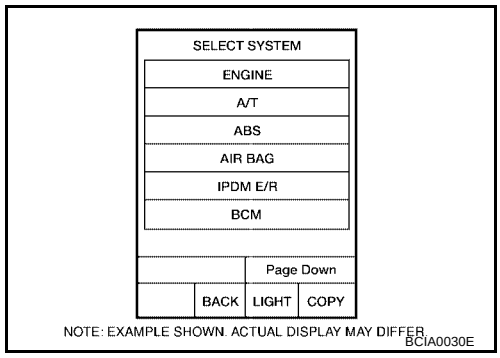

WITH GST

Follow the procedure “With CONSULT-II”.

Wiring Diagram — AT — FTS

UCS000W9

AT-FTS-01

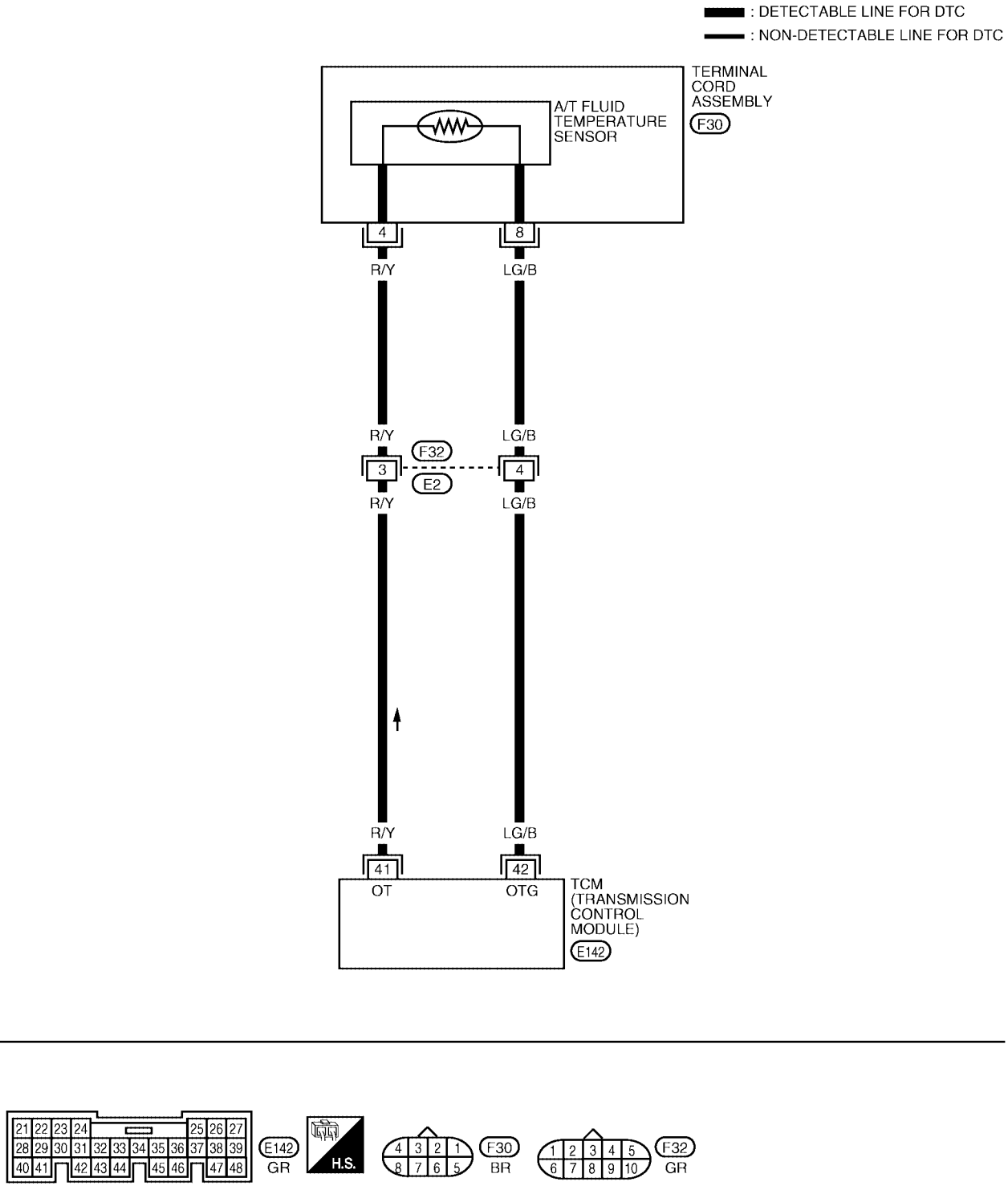

BCWA0194E

TCM terminals and data are reference value. Measured between each terminal and ground.

Terminal	Wire color	Item	Condition		Data (Approx.)
41	R/Y	Fluid temperature sensor		When ATF temperature 0°C (32°F)	4.0V
				When ATF temperature 20°C (68°F)	3.0V
				When ATF temperature 80°C (176°F)	0.8V
				When ATF temperature 100°C (212°F)	0.5V
42	LG/B	Fluid temperature sensor ground	–		0V

Diagnostic Procedure

UCS002LE

1. CHECK FLUID TEMPERATURE SENSOR SIGNAL

With CONSULT-II

1. Start engine.
2. Select “A/T” with “DATA MONITOR” mode in CONSULT-II.
3. Read out the value of “FLUID TEMP SE”.

Item name	Condition	Display value (Approx.)
Fluid temperature sensor	0°C (32°F)	4.0V
	20°C (68°F)	3.0V
	80°C (176°F)	0.8V
	100°C (212°F)	0.5V

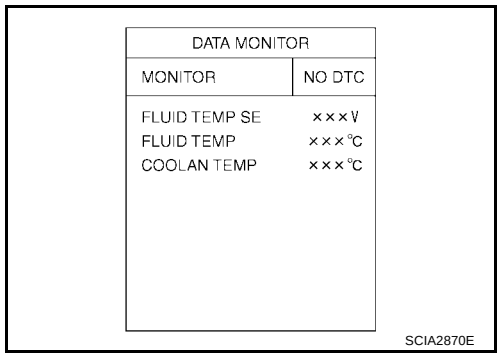

Without CONSULT-II

1. Start engine.
2. Check voltage between TCM connector terminals 41 and 42 while warming up A/T. Refer to AT-466, "Wiring Diagram — AT — FTS" .

Connector	Terminal (Wire color)	Temperature	Voltage (Approx.)
E142	41 (R/Y) - 42 (LG/B) (ground)	0°C (32°F)	4.0V
		20°C (68°F)	3.0V
		80°C (176°F)	0.8V
		100°C (212°F)	0.5V

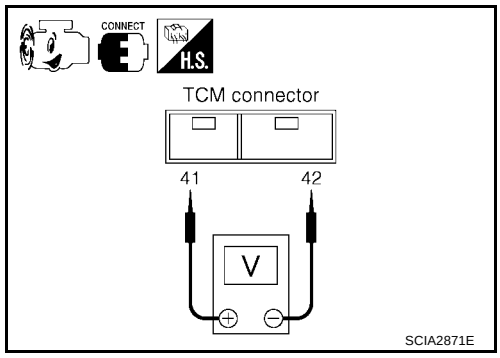

3. Turn ignition switch “OFF”.
4. Disconnect the TCM connector.
5. Check if there is continuity between the connector terminal and ground.

OK or NG

OK >> GO TO 6.
NG >> GO TO 2.

2. CHECK FLUID TEMPERATURE SENSOR CIRCUIT

1. Turn ignition switch “OFF”.
2. Disconnect the TCM connector.
3. Check resistance between terminals 41 and 42.

Connector	Terminal (Wire color)	Temperature	Resistance (Approx.)
E142	41 (R/Y) - 42 (LG/B) (ground)	0°C (32°F)	9.8 kΩ
		20°C (68°F)	4.2 kΩ
		80°C (176°F)	0.54 kΩ
		100°C (212°F)	0.31 kΩ

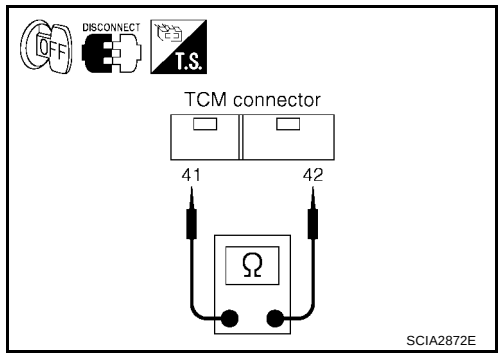

4. Check if there is continuity between the connector terminal and ground.

OK or NG

OK >> GO TO 6.
NG >> GO TO 3.

3. CHECK TERMINAL CORD ASSEMBLY WITH A/T FLUID TEMPERATURE SENSOR

1. Turn ignition switch “OFF”.
2. Disconnect terminal cord assembly harness connector.
3. Check resistance between terminals 4 and 8.

Connector	Terminal	Temperature	Resistance (Approx.)
F30	4 - 8	0°C (32°F)	9.8 kΩ
		20°C (68°F)	4.2 kΩ
		80°C (176°F)	0.54 kΩ
		100°C (212°F)	0.31 kΩ

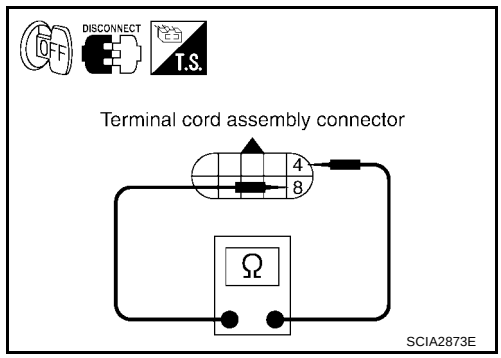

OK or NG

OK >> GO TO 4.
NG >> GO TO 5.

4. CHECK HARNESS BETWEEN TCM AND TERMINAL CORD ASSEMBLY

Check the following.

- Open or short-circuit in the harness between TCM and terminal cord assembly.

OK or NG

OK >> GO TO 6.
NG >> Repair or replace damaged parts.

5. CHECK A/T FLUID TEMPERATURE SENSOR

1. Remove side cover. Refer to AT-611, "Side cover" .
2. Disconnect A/T fluid temperature sensor.
3. Check resistance between terminals 4 and 8.

Connector	Terminal	Temperature	Resistance
F30	4 - 8	10°C (°F)	5.80 - 7.09kΩ
		110°C (°F)	0.23 - 0.26kΩ

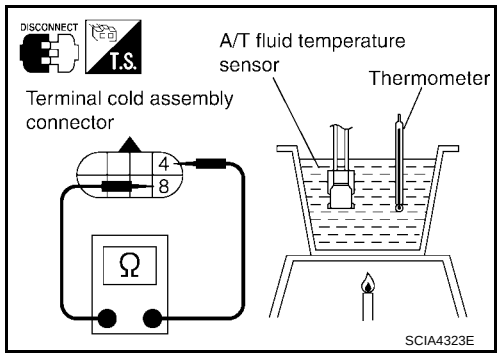

OK or NG

OK >> GO TO 6.
NG >> Repair or replace transmission wire. Refer to AT-611, "Transmission wire" .

6. CHECK DTC

Perform “DTC Confirmation Procedure”. Refer to AT-465, "DTC Confirmation Procedure" .

OK or NG

OK >> **INSPECTION END**
NG >> GO TO 7.

7. CHECK TCM

1. Check TCM input/output signal. Refer to AT-439, "TCM Input/Output Signal Reference Values" .
2. If NG, recheck TCM pin terminals for damage or loose connection with harness connector.

OK or NG

OK >> **INSPECTION END**
NG >> Repair or replace damaged parts.

Component Inspection

UCS002LF

A/T FLUID TEMPERATURE SENSOR

1. Remove side cover. Refer to AT-611, "Side cover" .
2. Disconnect A/T fluid temperature sensor.
3. Check resistance between terminals 4 and 8.

Connector	Terminal	Temperature	Resistance
F30	4 - 8	10°C (°F)	5.80 - 7.09kΩ
		110°C (°F)	0.23 - 0.26kΩ

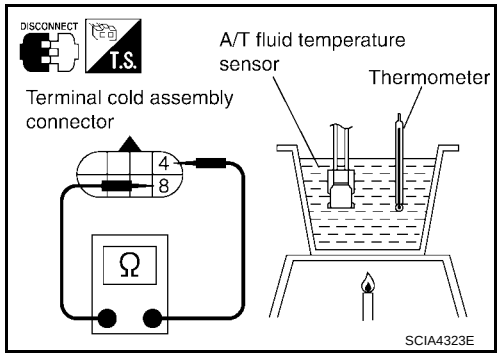

4. If NG, repair and replace transmission wire. Refer to AT-611, "Transmission wire" .

DTC P0711 FLUID TEMPERATURE SENSOR PERFORMANCE

PFP:31940

Description

UCS0011V

The A/T fluid temperature sensor detects the A/T fluid temperature and sends a signal to the TCM.

On Board Diagnosis Logic

UCS0011W

- This is an OBD-II self-diagnostic item.
- Diagnostic trouble code “FLUID TEMP SEN” with CONSULT-II or P0711 without CONSULT-II is detected when ATF temperature signal does not change.

Possible Cause

UCS0011X

- Harness or connectors
  (The sensor circuit is open or shorted.)
- A/T fluid temperature sensor

DTC Confirmation Procedure

UCS0011Y

CAUTION:
Always drive vehicle at a safe speed.

NOTE:
If “DTC Confirmation Procedure” has been previously performed, always turn ignition switch “OFF” and wait at least 10 seconds before performing the next test.
After the repair, perform the following procedure to confirm the malfunction is eliminated.

WITH CONSULT-II

1. Turn ignition switch “ON”. (Do not start engine.)
2. Select “DATA MONITOR” mode for “A/T” with CONSULT-II.
3. Start engine.
4. Drive vehicle and maintain the following conditions for at least 15 minutes (Total). (It is not necessary to maintain continuously.)
   VHCL SPEED SE-A/T: 40 km/h (25 MPH) or more
   SLCT LVR POSI: “D” position
5. If DTC is detected, go to AT-472, "Diagnostic Procedure" .

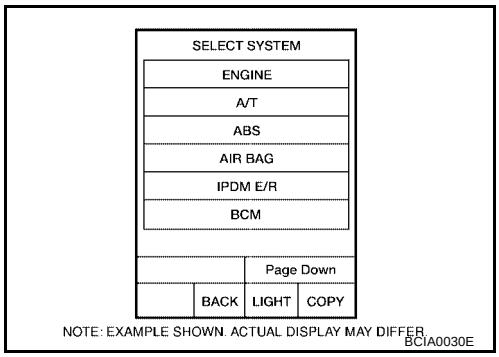

WITH GST

Follow the procedure “With CONSULT-II”.

Wiring Diagram — AT — FTSP

UCS0011Z

AT-FTSP-01

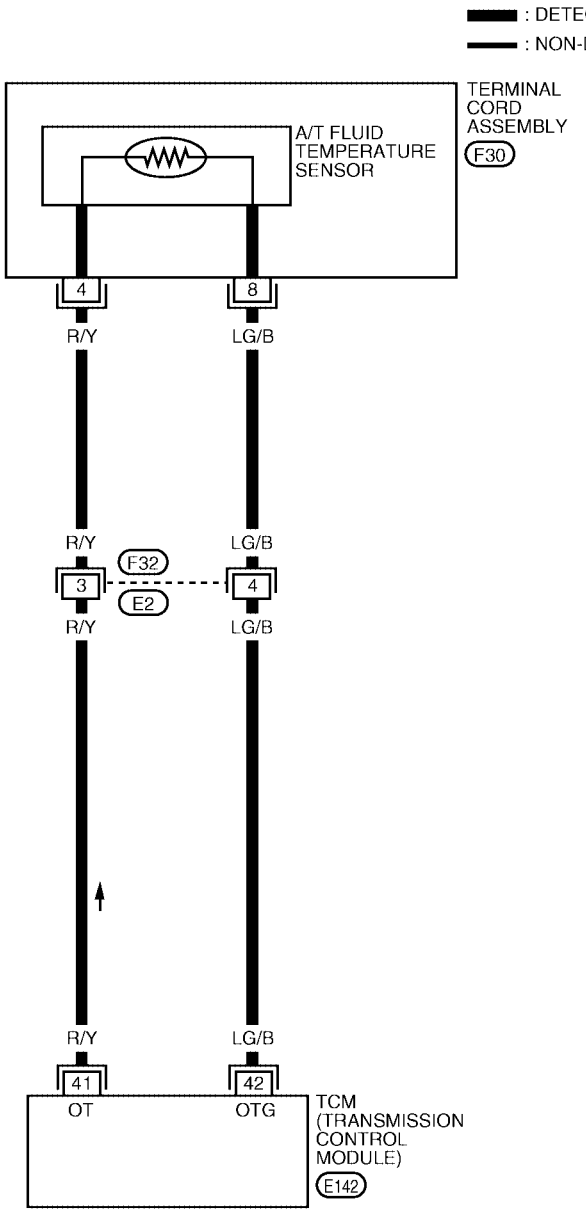

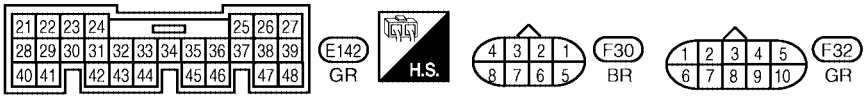

BCWA0195E

TCM terminals and data are reference value. Measured between each terminal and ground.

Terminal	Wire color	Item	Condition		Data (Approx.)
41	R/Y	Fluid temperature sensor		When ATF temperature 0°C (32°F)	4.0V
				When ATF temperature 20°C (68°F)	3.0V
				When ATF temperature 80°C (176°F)	0.8V
				When ATF temperature 100°C (212°F)	0.5V
42	LG/B	Fluid temperature sensor ground	–		0V

Diagnostic Procedure

UCS002LG

1. CHECK FLUID TEMPERATURE SENSOR SIGNAL

With CONSULT-II

1. Start engine.
2. Select “A/T” with “DATA MONITOR” mode in CONSULT-II.
3. Read out the value of “FLUID TEMP SE”.

Item name	Condition	Display value (Approx.)
Fluid temperature sensor	0°C (32°F)	4.0V
	20°C (68°F)	3.0V
	80°C (176°F)	0.8V
	100°C (212°F)	0.5V

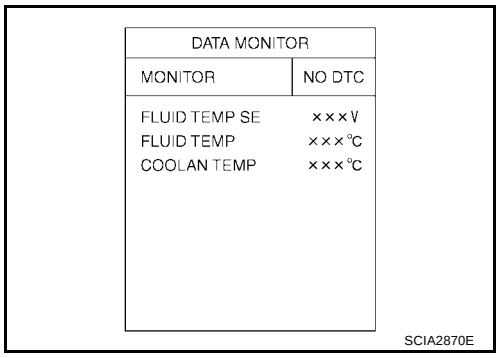

Without CONSULT-II

1. Start engine.
2. Check voltage between TCM connector terminals 41 and 42 while warming up A/T. Refer to AT-471, "Wiring Diagram — AT — FTSP" .

Connector	Terminal (Wire color)	Temperature	Voltage (Approx.)
E142	41 (R/Y) - 42 (LG/B) (ground)	0°C (32°F)	4.0V
		20°C (68°F)	3.0V
		80°C (176°F)	0.8V
		100°C (212°F)	0.5V

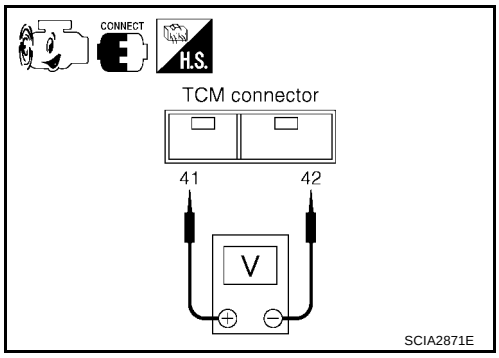

3. Turn ignition switch “OFF”.
4. Disconnect the TCM connector.
5. Check if there is continuity between the connector terminal and ground.

OK or NG

OK >> GO TO 6.
NG >> GO TO 2.

2. CHECK FLUID TEMPERATURE SENSOR CIRCUIT

1. Turn ignition switch “OFF”.
2. Disconnect the TCM connector.
3. Check resistance between terminals 41 and 42.

Connector	Terminal (Wire color)	Temperature	Resistance (Approx.)
E142	41 (R/Y) - 42 (LG/B) (ground)	0°C (32°F)	9.8 kΩ
		20°C (68°F)	4.2 kΩ
		80°C (176°F)	0.54 kΩ
		100°C (212°F)	0.31 kΩ

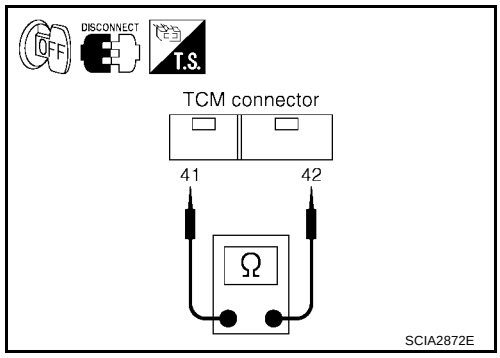

4. Check if there is continuity between the connector terminal and ground.

OK or NG

OK >> GO TO 6.
NG >> GO TO 3.

3. CHECK TERMINAL CORD ASSEMBLY WITH A/T FLUID TEMPERATURE SENSOR

1. Turn ignition switch “OFF”.
2. Disconnect terminal cord assembly harness connector.
3. Check resistance between terminals 4 and 8.

Connector	Terminal	Temperature	Resistance (Approx.)
F30	4 - 8	0°C (32°F)	9.8 kΩ
		20°C (68°F)	4.2 kΩ
		80°C (176°F)	0.54 kΩ
		100°C (212°F)	0.31 kΩ

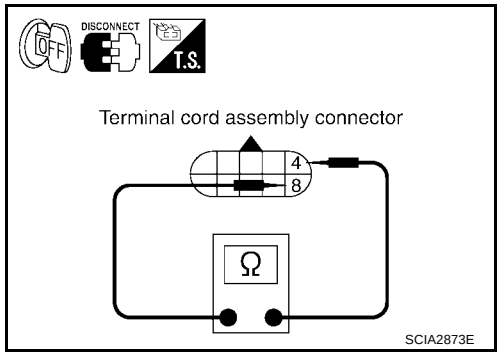

4. Reinstall any part removed.

OK or NG

OK >> GO TO 4.
NG >> GO TO 5.

4. CHECK HARNESS BETWEEN TCM AND TERMINAL CORD ASSEMBLY

Check the following.

- Open or short-circuit in the harness between TCM and terminal cord assembly.

OK or NG

OK >> GO TO 6.
NG >> Repair or replace damaged parts.

5. CHECK A/T FLUID TEMPERATURE SENSOR

1. Remove side cover. Refer to AT-611, "Side cover" .
2. Disconnect A/T fluid temperature sensor.
3. Check resistance between terminals 4 and 8.

Connector	Terminal)	Temperature	Resistance
F30	4 - 8	10°C (°F)	5.80 - 7.09kΩ
		110°C (°F)	0.23 - 0.26kΩ

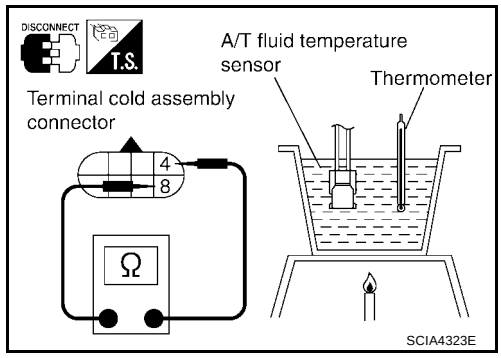

OK or NG

OK >> GO TO 6.
NG >> Repair or replace transmission wire. Refer to AT-611, "Transmission wire" .

6. CHECK DTC

Perform “DTC Confirmation Procedure”. Refer to AT-470, "DTC Confirmation Procedure" .

OK or NG

OK >> **INSPECTION END**
NG >> GO TO 7.

7. CHECK TCM

1. Check TCM input/output signal. Refer to AT-439, "TCM Input/Output Signal Reference Values" .
2. If NG, recheck TCM pin terminals for damage or loose connection with harness connector.

OK or NG

OK >> **INSPECTION END**
NG >> Repair or replace damaged parts.

Component Inspection

UCS002LH

A/T FLUID TEMPERATURE SENSOR

1. Remove side cover. Refer to AT-611, "Side cover" .
2. Disconnect A/T fluid temperature sensor.
3. Check resistance between terminals 4 and 8.

Connector	Terminal)	Temperature	Resistance
F30	4 - 8	10°C (°F)	5.80 - 7.09kΩ
		110°C (°F)	0.23 - 0.26kΩ

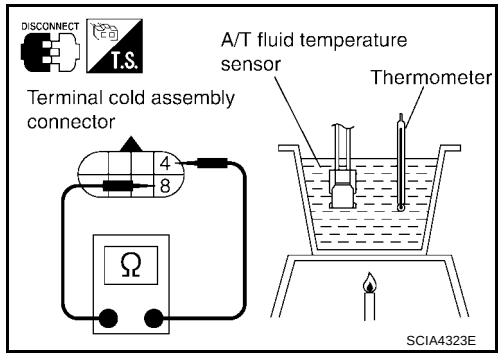

4. If NG, repair or replace transmission wire. Refer to AT-611, "Transmission wire" .

DTC P0717 TURBINE REVOLUTION SENSOR CIRCUIT

PFP:31935

Description

UCS000WB

- The turbine revolution sensor detects forward clutch drum rpm (revolutions per minute). It is located on the input side of the automatic transaxle. The revolution sensor is located on the output side of the automatic transaxle. With the two sensors, input and output rpms are accurately detected. The result is optimal shift timing during deceleration and improved shifting.
- Hall IC is installed in turbine revolution sensor, it itself handles in pulse of rectangular wave signal and transmits it to TCM due to hall effect. TCM recognizes the pulse with input rpm speed. Size of output doesn't depend on a rotation number and is fixed.

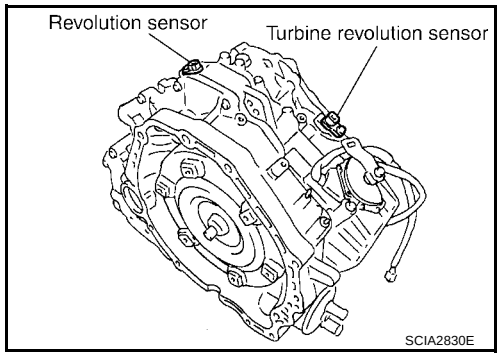

On Board Diagnosis Logic

UCS000WC

- This is an OBD-II self-diagnostic item.
- Diagnostic trouble code “TURBINE SENSOR” with CONSULT-II or P0717 without CONSULT-II is detected under the following conditions.
  - When signal from turbine revolution sensor does not input due to open, short, and so on.
  - When unexpected signal input during running.

Possible Cause

UCS000WD

- Harness or connectors
  (The sensor circuit is open or shorted.)
- Turbine revolution sensor

DTC Confirmation Procedure

UCS000WE

CAUTION:
Always drive vehicle at a safe speed.

NOTE:
If “DTC Confirmation Procedure” has been previously performed, always turn ignition switch “OFF” and wait at least 10 seconds before performing the next test.
After the repair, perform the following procedure to confirm the malfunction is eliminated.

WITH CONSULT-II

1. Turn ignition switch “ON”. (Do not start engine.)
2. Select “DATA MONITOR” mode for “A/T” with CONSULT-II.
3. Start engine.
4. Drive vehicle and maintain the following conditions for at least 1 consecutive minute.
   FLUID TEMP: More than 20°C (68°F)
   VHCL/S SE-A/T: 70 km/h (43 MPH) or more
   SLCT LVR POSI: “D” position
   GEAR: Except 1st position
5. If DTC is detected, go to AT-477, "Diagnostic Procedure" .

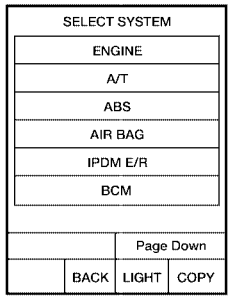

NOTE: EXAMPLE SHOWN. ACTUAL DISPLAY MAY DIFFER
BCIA0030E

WITH GST

Follow the procedure “With CONSULT-II”.

Wiring Diagram — AT — TRSC

UCS000WF

AT-TRSC-01

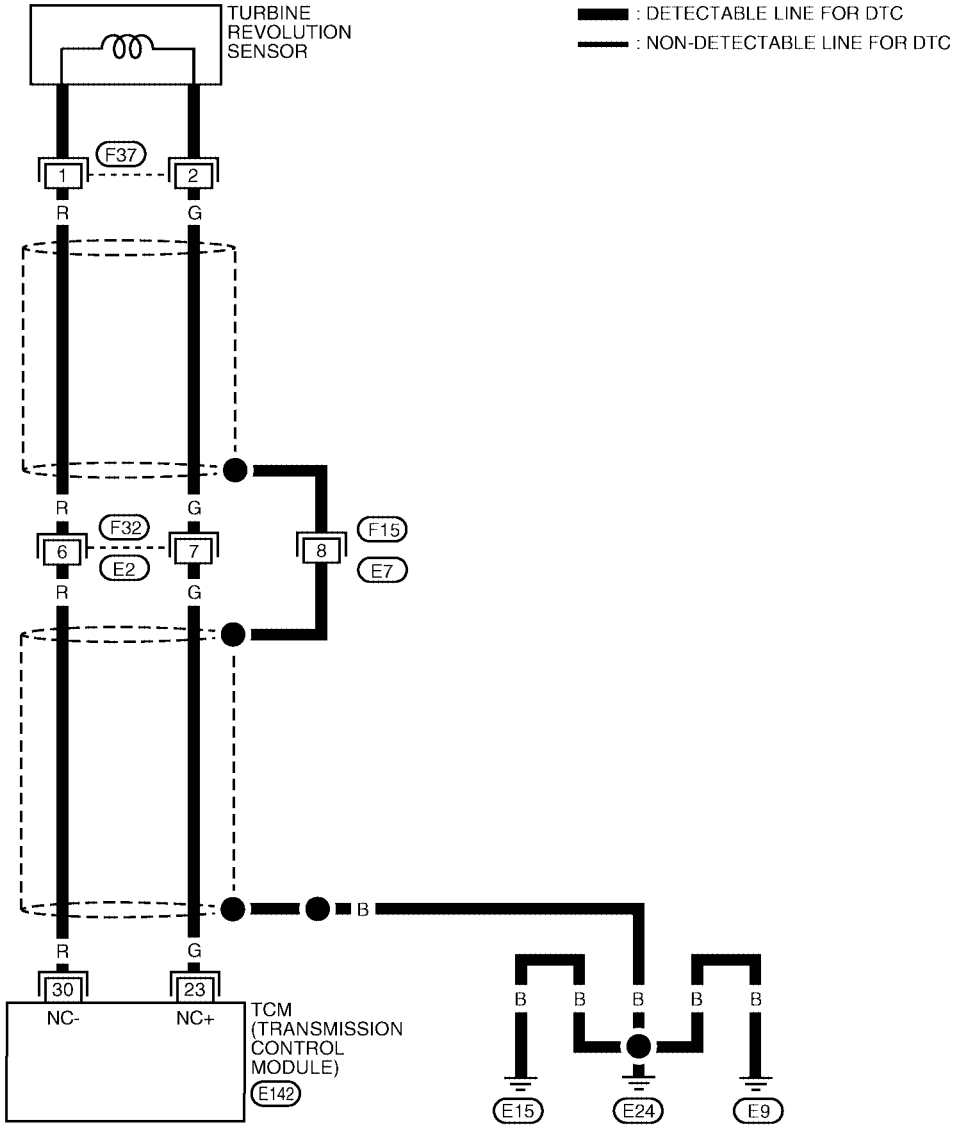

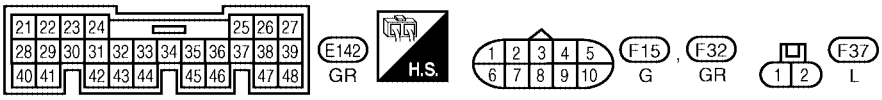

BCWA0196E

TCM terminals and data are reference value. Measured between each terminal and ground.

Terminal	Wire color	Item	Condition		Data (Approx.)
23	G	Turbine revolution sensor power supply		When turning ignition switch ON.	Battery voltage
				When turning ignition switch OFF.	0V
30	R	Turbine revolution sensor		When moving at 20 km/h (12 MPH) in 1st gear.	371Hz

Diagnostic Procedure

UCS000WG

1. CHECK TURBINE REVOLUTION SENSOR CIRCUIT

With CONSULT-II

1. Start engine.
2. Select “DATA MONITOR” mode for “A/T” with CONSULT-II.
3. Drive vehicle and read out the value of “TURBINE REV”.

Monitor item	Condition	Specification
TURBINE REV	During driving (lock-up ON)	Approximately matches the engine speed.

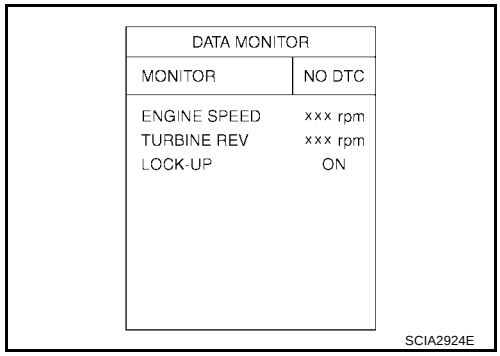

Without CONSULT-II

1. Start the engine.
2. Check pulse between TCM connector terminals 23 and 30.

Connector	Terminal (Wire color)	Condition	Data (Approx.)
E142	23 (G) - 30 (R) (ground)	When moving at 20 km/h (12 MPH) in 1st gear.	371 Hz

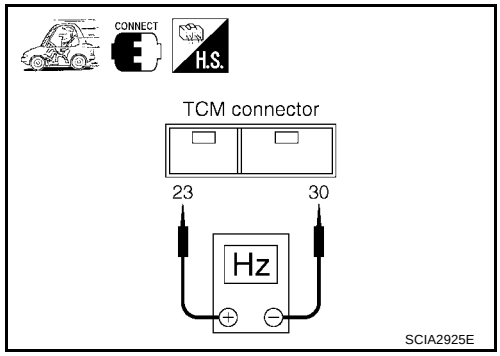

OK or NG

OK >> GO TO 3.
NG >> GO TO 2.

2. DETECT MALFUNCTIONING ITEM

Check the following.

- Open or short-circuit in the harness between TCM and turbine revolution sensor.
- Turbine revolution sensor. Refer to AT-478, "Component Inspection" .

OK or NG

OK >> GO TO 3.
NG >> Repair or replace damaged parts.

3. CHECK DTC

Perform “DTC Confirmation Procedure”. Refer to AT-475, "DTC Confirmation Procedure" .

OK or NG

OK >> **INSPECTION END**
NG >> GO TO 4.

4. CHECK TCM

1. Check TCM input/output signal. Refer to AT-439, "TCM Input/Output Signal Reference Values" .
2. If NG, recheck TCM pin terminals for damage or loose connection with harness connector.

OK or NG

OK >> **INSPECTION END**
NG >> Repair or replace damaged parts.

Component Inspection

UCS0015F

TURBINE REVOLUTION SENSOR

1. Remove turbine revolution sensor.
2. Connect 12V power supply and 100 Ω resistance to the terminal. (Do not mistake polarity)
3. Inspect the voltage of HIGH and LOW signal by shaking magnetic body from side to side at turbine revolution sensor tip [gap is within 5 mm (0.20 in)].

   CAUTION:
   Make sure to shake direction from bolt hole to sensor-self when shaking magnetic body. If not, voltage value cannot change.

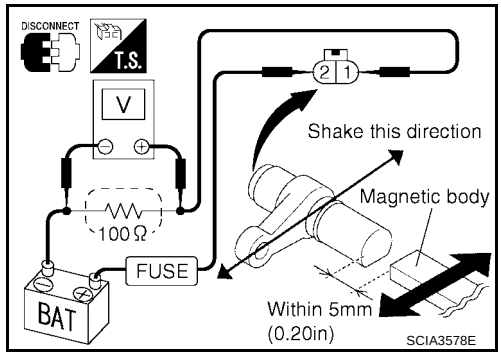

Signal	Voltage (Approx.)
HIGH	1.2 - 1.6V
LOW	0.4 - 0.8V

4. If NG, replace turbine revolution sensor.

DTC P0722 VEHICLE SPEED SENSOR A/T (REVOLUTION SENSOR) CIRCUIT

PFP:31935

Description

UCS000UJ

- The revolution sensor detects the revolution of the idler gear parking pawl lock gear and emits a pulse signal. The pulse signal is sent to the TCM which converts it into vehicle speed.
- Hall IC is installed in revolution sensor, it itself handles in pulse of rectangular wave signal and transmits it to TCM due to hall effect. TCM recognizes the pulse with vehicle speed. Size of output doesn't depend on a rotation number and is fixed.

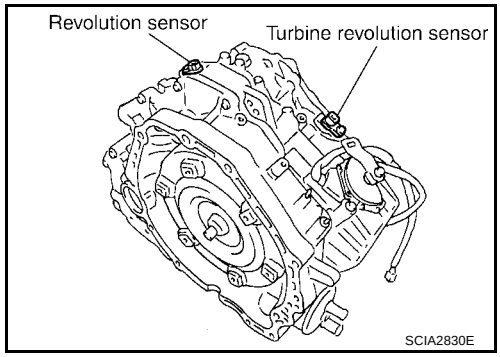

On Board Diagnosis Logic

UCS000UK

- This is an OBD-II self-diagnostic item.
- Diagnostic trouble code “VHCL SPEED SEN-A/T” with CONSULT-II or P0722 without CONSULT-II is detected under the following conditions.
  - When signal from revolution sensor does not input due to open, short, and so on.
  - When unexpected signal input during running.

Possible Cause

UCS000UL

- Harness or connectors
  (The sensor circuit is open or shorted.)
- Revolution sensor

DTC Confirmation Procedure

UCS000UM

CAUTION:

- **Always drive vehicle at a safe speed.**
- **Be careful not to rev engine into the red zone on the tachometer.**

NOTE:

If “DTC Confirmation Procedure” has been previously performed, always turn ignition switch “OFF” and wait at least 10 seconds before performing the next test.

After the repair, perform the following procedure to confirm the malfunction is eliminated.

WITH CONSULT-II

1. Turn ignition switch “ON”. (Do not start engine.)
2. Select “DATA MONITOR” mode for “A/T” with CONSULT-II.
3. Start engine.
4. Drive vehicle and check for an increase of “VHCL/S SE-A/T” value in response to “VHCL/S SE-MTR” value.
   If the check result is NG, go to AT-481, "Diagnostic Procedure" .
   If the check result is OK, go to following step.
5. Maintain the following conditions for at least 2 consecutive minutes.
   FLUID TEMP: More than 20°C (68°F)
   VHCL/S SE-A/T: 70 km/h (43 MPH) or more
   SLCT LVR POSI: “D” position
   If the check result is NG, go to AT-481, "Diagnostic Procedure" .

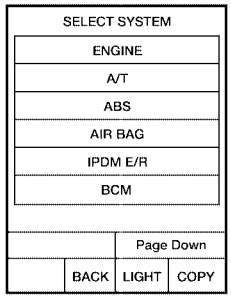

NOTE: EXAMPLE SHOWN. ACTUAL DISPLAY MAY DIFFER
BCIA0030E

WITH GST

Follow the procedure “With CONSULT-II”.

Wiring Diagram — AT — VSSATC

UCS000UN

AT-VSSATC-01

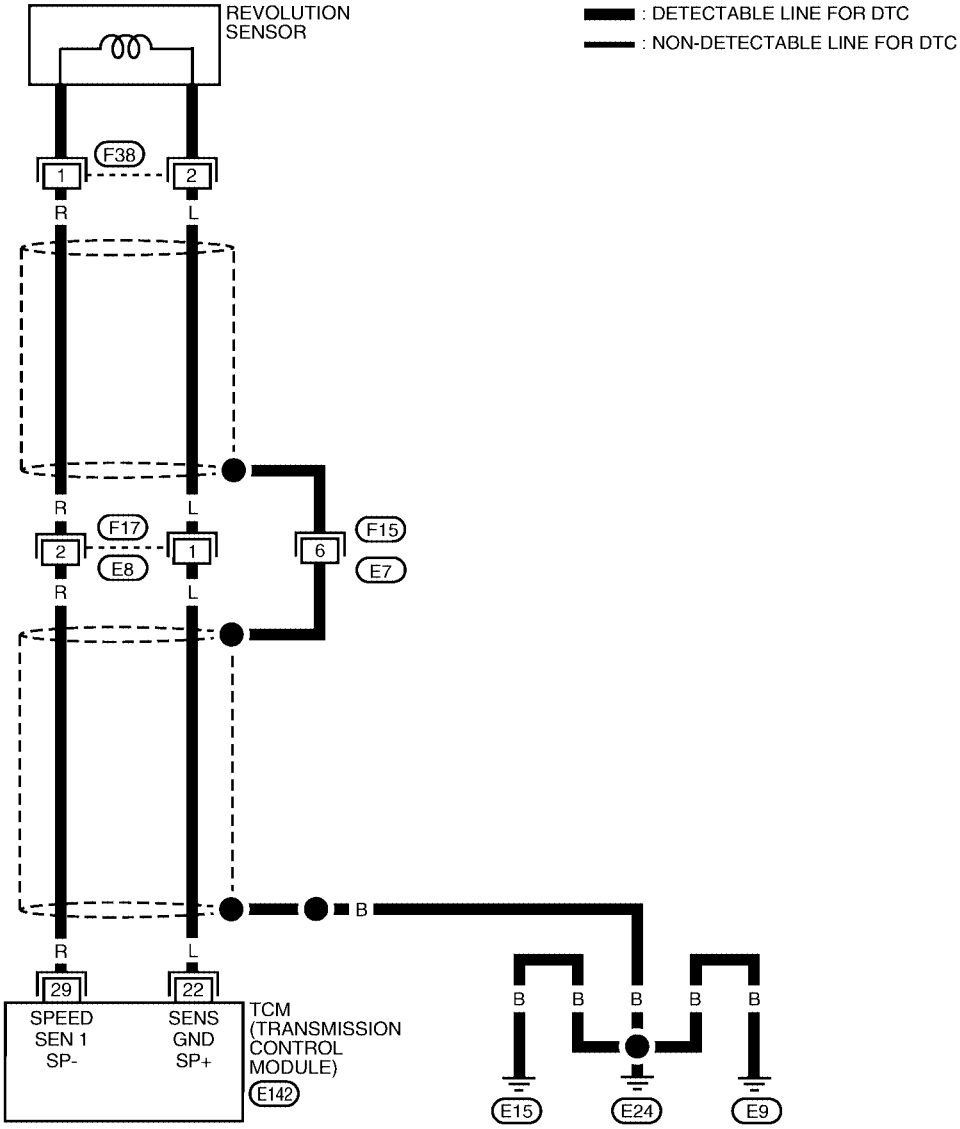

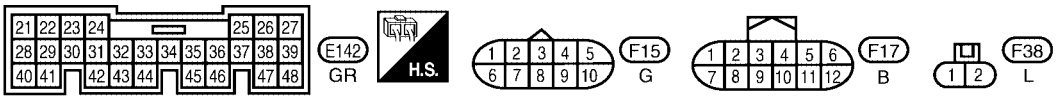

BCWA0422E

TCM terminals and data are reference value. Measured between each terminal and ground.

Terminal	Wire color	Item	Condition		Data (Approx.)
22	L	Revolution sensor power supply		When turning ignition switch ON.	Battery voltage
				When turning ignition switch OFF.	0V
29	R	Revolution sensor		When moving at 20 km/h (12 MPH) in 1st gear.	119Hz

Diagnostic Procedure

UCS000UO

1. CHECK REVOLUTION SENSOR CIRCUIT

With CONSULT-II

1. Start engine.
2. Select “DATA MONITOR” mode for “A/T” with CONSULT-II.
3. Drive vehicle and read out the value of “VHCL/S SE-AT”.

Monitor item	Condition	Specification
VHCL/S SE-AT	During driving	Approximately matches the speedometer reading.

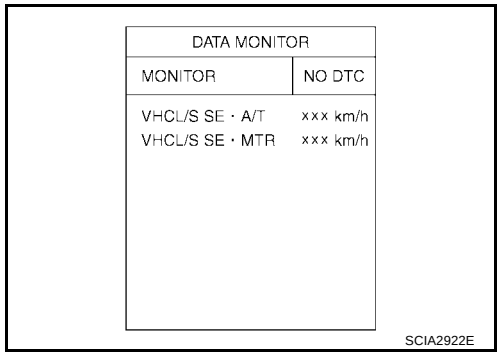

Without CONSULT-II

1. Start the engine.
2. Check pulse between TCM connector terminals 22 and 29.

Connector	Terminal (Wire color)	Condition	Data (Approx.)
E142	22 (L) - 29 (R) (ground)	When moving at 20 km/h (12 MPH) in 1st gear.	119 Hz

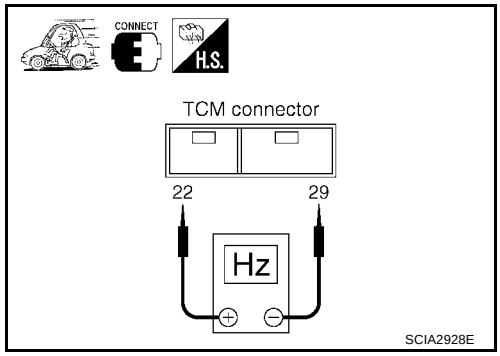

OK or NG

OK >> GO TO 3.
NG >> GO TO 2.

2. DETECT MALFUNCTIONING ITEM

Check the following.

- Open or short-circuit in the harness between TCM and revolution sensor.
- Revolution sensor. Refer to AT-482, "Component Inspection" .

OK or NG

OK >> GO TO 3.
NG >> Repair or replace damaged parts.

3. CHECK DTC

Perform “DTC Confirmation Procedure”. Refer to AT-479, "DTC Confirmation Procedure" .

OK or NG

OK >> **INSPECTION END**
NG >> GO TO 4.

4. CHECK TCM

1. Check TCM input/output signal. Refer to AT-439, "TCM Input/Output Signal Reference Values" .
2. If NG, recheck TCM pin terminals for damage or loose connection with harness connector.

OK or NG

OK >> **INSPECTION END**
NG >> Repair or replace damaged parts.

Component Inspection

UCS0015G

REVOLUTION SENSOR

1. Remove revolution sensor.
2. Connect 12V power supply and 100 Ω resistance to the terminal. (Do not mistake polarity)
3. Inspect the voltage of HIGH and LOW signal by shaking magnetic body from side to side at revolution sensor tip [gap is within 5mm (0.20 in)].

   CAUTION:
   Make sure to shake direction from bolt hole to sensor-self when shaking magnetic body. If not, voltage value cannot change.

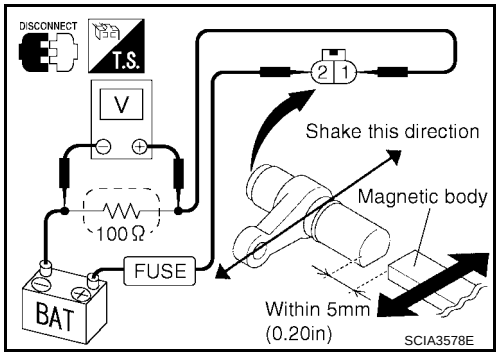

Signal	Voltage (Approx.)
HIGH	1.2 - 1.6V
LOW	0.4 - 0.8V

4. If NG, replace revolution sensor.

DTC P0726 ENGINE SPEED INPUT CIRCUIT PERFORMANCE

PFP:31036

Description

UCS000UP

The engine speed signal is sent from the ECM to the TCM.

On Board Diagnosis Logic

UCS000UQ

- This is not an OBD-II self-diagnostic item.
- Diagnostic trouble code “ENG SPD INP PERFOR” with CONSULT-II or 14th judgement flicker without CONSULT-II is detected when malfunction is detected in engine speed signal, actual engine torque signal or torque reduction signal that is output from ECM through CAN communication.

Possible Cause

UCS000UR

- Harness or connectors
  (The signal circuit is open or shorted.)
- ECM

DTC Confirmation Procedure

UCS000US

CAUTION:
Always drive vehicle at a safe speed.

NOTE:
If “DTC Confirmation Procedure” has been previously performed, always turn ignition switch “OFF” and wait at least 10 seconds before performing the next test.
After the repair, perform the following procedure to confirm the malfunction is eliminated.

WITH CONSULT-II

1. Turn ignition switch “ON” and select “DATA MONITOR” mode for “A/T” with CONSULT-II.
2. Start engine.
3. Drive vehicle and maintain the following conditions for at least 10 consecutive seconds.
   VHCL/S SE-A/T: 10 km/h (6 MPH) or more
   ACCELE ANGLE: More than 10 %
   SLCT LVR POSI: “D” position
4. If DTC is detected, go to AT-483, "Diagnostic Procedure" .

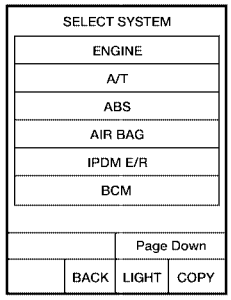

NOTE: EXAMPLE SHOWN. ACTUAL DISPLAY MAY DIFFER
BCIA0030E

Diagnostic Procedure

UCS000UT

1. CHECK DTC WITH ECM

With CONSULT-II

1. Turn ignition switch “ON”. (Do not start engine.)
2. Select “SELF-DIAG RESULTS” mode for “ENGINE” with CONSULT-II. Refer to EC-114, "CONSULT-II Function" .

OK or NG

OK >> GO TO 2.
NG >> Check the DTC detected item, go to EC-10, "INDEX FOR DTC" .
- If CAN communication line is detected, go to AT-452, "DTC U1000 CAN COMMUNICATION LINE" .

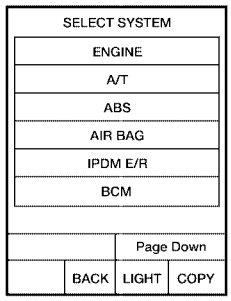

NOTE: EXAMPLE SHOWN. ACTUAL DISPLAY MAY DIFFER
BCIA0030E

2. CHECK DTC WITH TCM

With CONSULT-II

1. Start engine.
2. Select “DATA MONITOR” mode for “A/T” with CONSULT-II.
3. While monitoring “ENGINE SPEED”, check for engine speed change corresponding to “ACCELE ANGLE”.

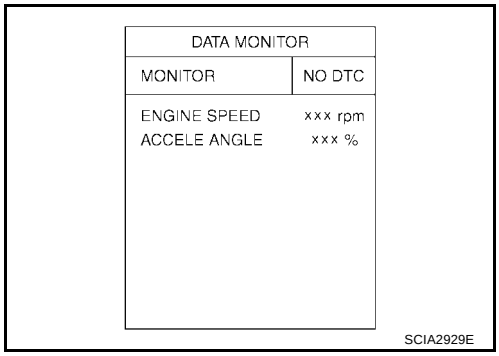

OK or NG

OK >> GO TO 3.
NG >> Check the ignition signal circuit.
- Refer to EC-645, "IGNITION SIGNAL" .

3. CHECK DTC

Perform “DTC Confirmation Procedure”. Refer to AT-483, "DTC Confirmation Procedure" .

OK or NG

OK >> **INSPECTION END**
NG >> GO TO 4.

4. CHECK TCM

1. Check TCM input/output signal. Refer to AT-439, "TCM Input/Output Signal Reference Values" .
2. If NG, recheck TCM pin terminals for damage or loose connection with harness connector.

OK or NG

OK >> **INSPECTION END**
NG >> Repair or replace damaged parts.

DTC P0731 A/T 1ST GEAR FUNCTION

PFP:31940

Description

UCS00121

- This malfunction will not be detected while the O/D OFF indicator lamp is indicating another self-diagnosis malfunction.
- This malfunction is detected when the A/T does not shift into first gear position as instructed by the TCM. This is not caused by electrical malfunction (circuits open or shorted) but by mechanical malfunction such as control valve sticking, improper solenoid valve operation, etc.

Gear position		Shift solenoid valve				
		A	B	C	D	E
1st	D	ON (Closed)	ON (Open)	ON (Open)	OFF (Open)	OFF (Closed)
	L	ON (Closed)	ON (Open)	ON (Open)	OFF (Open)	OFF (Closed)

On Board Diagnosis Logic

UCS00122

- This is an OBD-II self-diagnostic item.
- Diagnostic trouble code “A/T 1ST GR FNCTN” with CONSULT-II or P0731 without CONSULT-II is detected when A/T cannot be shifted to the 1st gear position even if electrical circuit is good.

Possible Cause

UCS002LP

- Shift solenoid valve A
  (Off stick.)
- 2nd brake
- 2nd coast brake
- One-way clutch No.1
- One-way clutch No.2
- Hydraulic control circuit

DTC Confirmation Procedure

UCS00124

CAUTION:

- **Always drive vehicle at a safe speed.**
- **Be careful not to rev engine into the red zone on the tachometer.**

NOTE:

If “DTC Confirmation Procedure” has been previously performed, always turn ignition switch “OFF” and wait at least 10 seconds before performing the next test.

After the repair, perform the following procedure to confirm the malfunction is eliminated.

WITH CONSULT-II

1. Start engine and select “DATA MONITOR” mode for “A/T” with CONSULT-II.
2. Make sure that ATF temperature is within the range below.
   FLUID TEMP: More than 20°C (68°F)
   If out of range, drive the vehicle to warm up the fluid.
3. Accelerate vehicle to maintain the following conditions for at least 12 consecutive seconds.
   SLCT LVR POSI: “D” position
   GEAR: 1st position
   [Vehicle speed and accelerator angle: 1st gear position retainable condition. (Refer to AT-695, "VEHICLE SPEED WHEN SHIFTING GEARS" .)]
   Driving location: Driving the vehicle uphill (increased engine load) will help maintain the driving conditions required for this test.

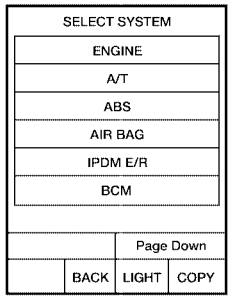

NOTE: EXAMPLE SHOWN. ACTUAL DISPLAY MAY DIFFER
BCIA0030E

4. If DTC is detected, go to AT-487, "Diagnostic Procedure" .

WITH GST

Follow the procedure “With CONSULT-II”.

Wiring Diagram — AT — 1STSIG

UCS00125

AT-1STSIG-01

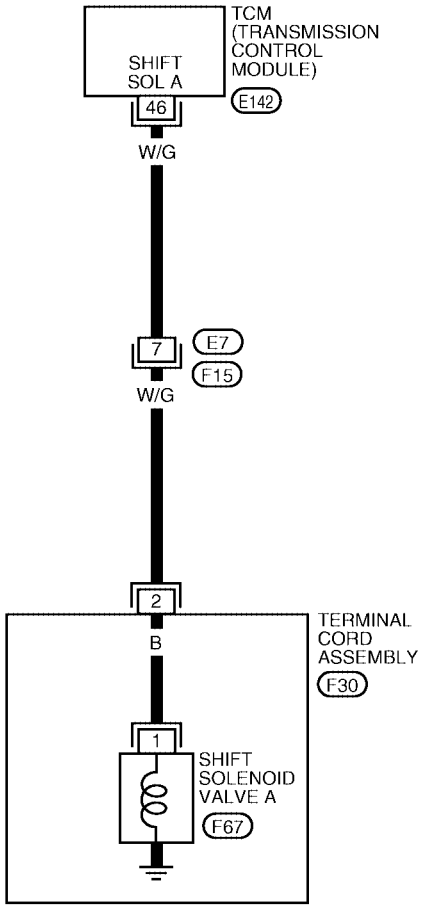

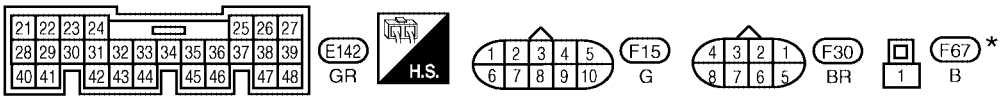

*: THIS CONNECTOR IS NOT SHOWN IN "HARNESS LAYOUT" OF PG SECTION.

BCWA0198E

TCM terminal and data are reference value. Measured between each terminal and ground.

Terminal	Wire color	Item	Condition		Data (Approx.)
46	W/G	Shift solenoid valve A		When shift solenoid valve A operates. (When driving in 1st gear.)	Battery voltage
				When shift solenoid valve A does not operate.	0V

Diagnostic Procedure

UCS002LI

1. CHECK SHIFT SOLENOID VALVE A CIRCUIT

Perform “Diagnostic Procedure” for DTC P0750. Refer to AT-521, "Diagnostic Procedure" .

OK or NG

OK >> GO TO 2.
NG >> Repair or replace damaged parts.

2. CHECK MALFUNCTIONING ITEM

1. Control valve assembly. Refer to AT-611, "Control Valve Assembly" .
2. Disassembly A/T. Refer to AT-628, "DISASSEMBLY" .
3. Check the following item:

- 2nd brake. Refer to AT-648, "Oil Pump, 2nd Coast Brake & 2nd Brake" .
- 2nd coast brake. Refer to AT-648, "Oil Pump, 2nd Coast Brake & 2nd Brake" , AT-654, "One-Way Clutch Outer Race Sub Assembly & 2nd Coast Brake Hub & One-Way Clutch No.1" .
- One-way clutch No.1. Refer to AT-654, "One-Way Clutch Outer Race Sub Assembly & 2nd Coast Brake Hub & One-Way Clutch No.1" .
- One-way clutch No.2. Refer to AT-628, "DISASSEMBLY" .

OK or NG

OK >> GO TO 3.
NG >> Repair or replace damaged parts.

3. CHECK DTC

Perform “DTC Confirmation Procedure”. Refer to AT-485, "DTC Confirmation Procedure" .

OK or NG

OK >> **INSPECTION END**
NG >> Replace control valve assembly. Refer to AT-611, "Control Valve Assembly" .

DTC P0732 A/T 2ND GEAR FUNCTION

PFP:31940

Description

UCS0024A

- This malfunction will not be detected while the O/D OFF indicator lamp is indicating another self-diagnosis malfunction.
- This malfunction is detected when the A/T does not shift into second gear position as instructed by the TCM. This is not caused by electrical malfunction (circuits open or shorted) but by mechanical malfunction such as control valve sticking, improper solenoid valve operation, etc.

Gear position		Shift solenoid valve				
		A	B	C	D	E
2nd	D	OFF (Open)	OFF (Closed)	ON (Open)	OFF (Open)	OFF (Closed)
	L	OFF (Open)	OFF (Closed)	ON (Open)	OFF (Open)	OFF (Closed)

On Board Diagnosis Logic

UCS0024B

- This is an OBD-II self-diagnostic item.
- Diagnostic trouble code “A/T 2ND GR FNCTN” with CONSULT-II or P0732 without CONSULT-II is detected when A/T cannot be shifted to the 2nd gear position even if electrical circuit is good.

Possible Cause

UCS002LQ

- Shift solenoid valve A
  (On stick.)
- Shift solenoid valve B
  (On stick.)
- Shift solenoid valve C
  (Off stick.)
- Shift solenoid valve D
  (On stick.)
- Pressure control solenoid valve A
  (On stick.)
- Pressure control solenoid valve C
  (On stick.)
- U/D brake
- 2nd coast brake
- 2nd brake
- One-way clutch No.1
- One-way clutch No.2
- B5 brake
- Hydraulic control circuit

DTC Confirmation Procedure

UCS0024D

CAUTION:

- **Always drive vehicle at a safe speed.**
- **Be careful not to rev engine into the red zone on the tachometer.**

NOTE:

If “DTC Confirmation Procedure” has been previously performed, always turn ignition switch “OFF” and wait at least 10 seconds before performing the next test.

After the repair, perform the following procedure to confirm the malfunction is eliminated.

WITH CONSULT-II

1. Start engine and select “DATA MONITOR” mode for “A/T” with CONSULT-II.
2. Make sure that ATF temperature is within the range below.
   FLUID TEMP: More than 20°C (68°F)
   If out of range, drive the vehicle to warm up the fluid.
3. Accelerate vehicle to maintain the following conditions for at least 12 consecutive seconds.
   SLCT LVR POSI: “D” position
   GEAR: 2nd position
   [Vehicle speed and accelerator angle: 2nd gear position retainable condition. (Refer to AT-695, "VEHICLE SPEED WHEN SHIFTING GEARS" .)]
   Driving location: Driving the vehicle uphill (increased engine load) will help maintain the driving conditions required for this test.
4. If DTC is detected, go to AT-492, "Diagnostic Procedure" .

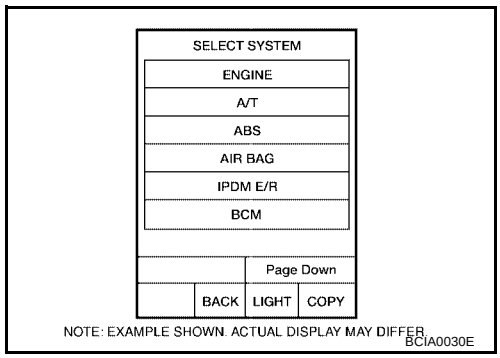

WITH GST

Follow the procedure “With CONSULT-II”.

Wiring Diagram — AT — 2NDSIG

UCS0024E

AT-2NDSIG-01

: DETECTABLE LINE FOR DTC
: NON-DETECTABLE LINE FOR DTC

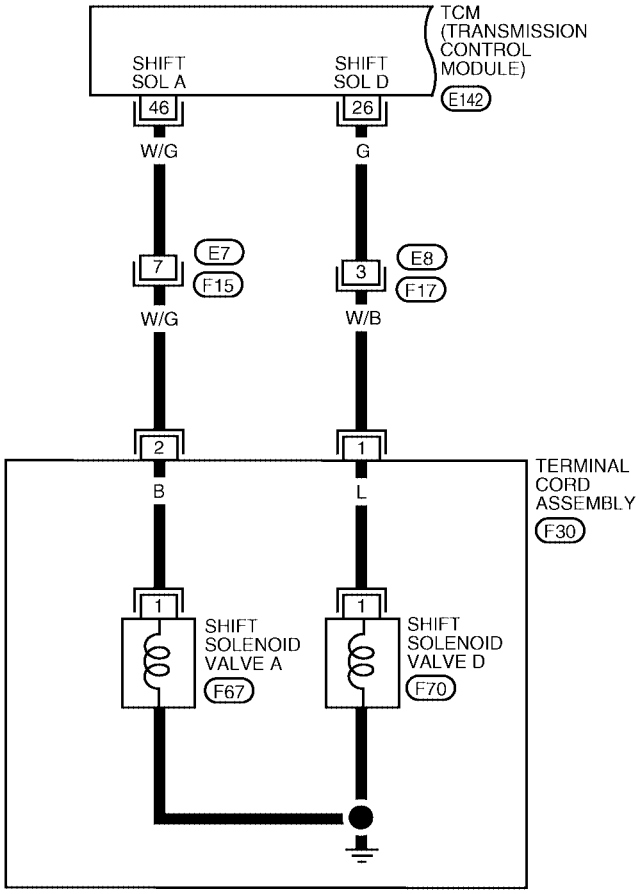

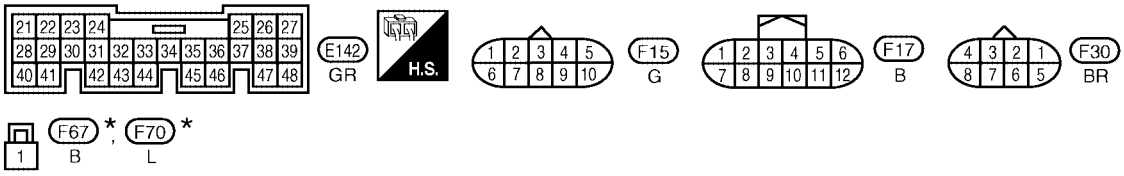

*: THIS CONNECTOR IS NOT SHOWN IN "HARNESS LAYOUT".

BCWA0199E

AT-2NDSIG-02

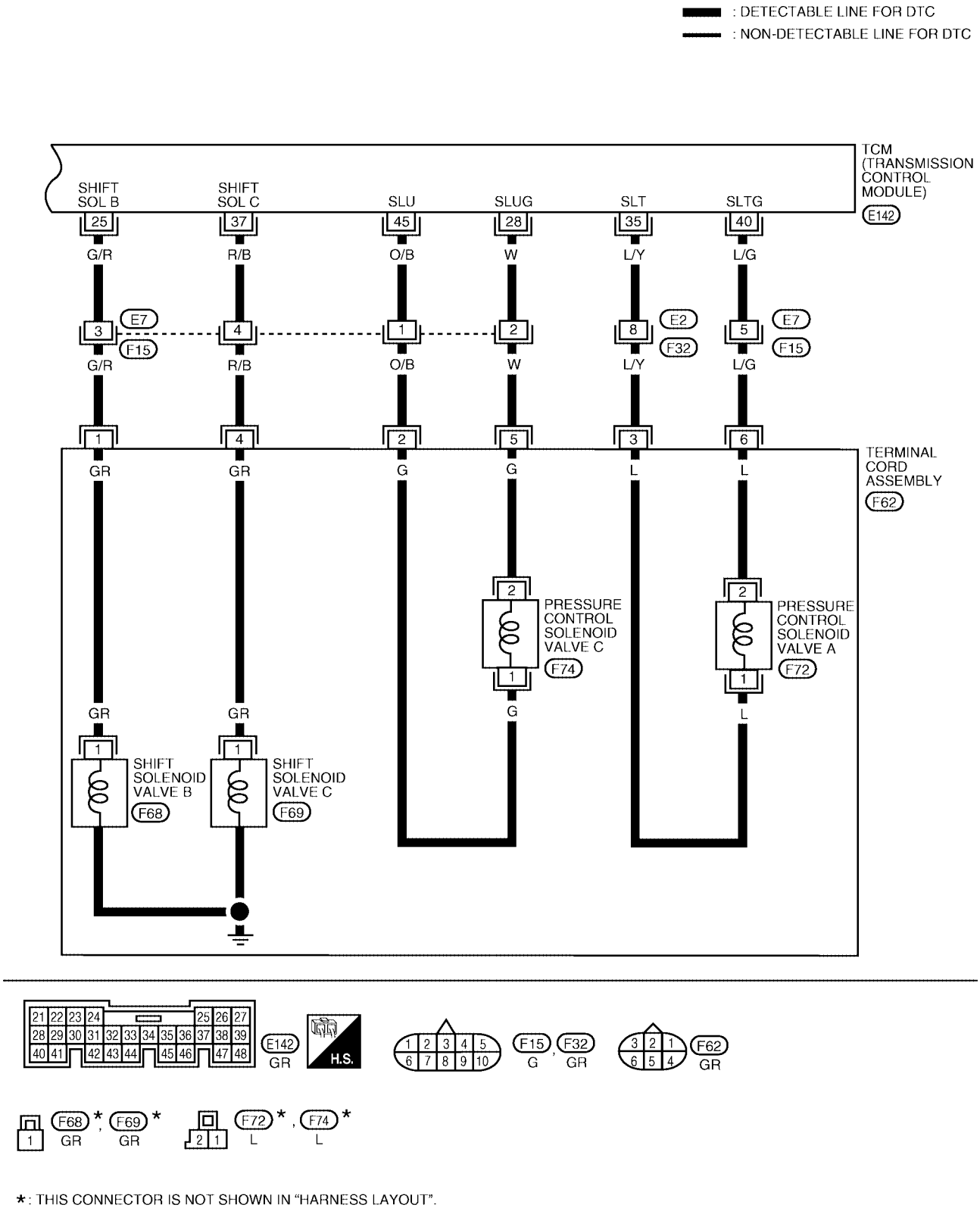

*: THIS CONNECTOR IS NOT SHOWN IN "HARNESS LAYOUT".

BCWA0200E

TCM terminals and data are reference value. Measured between each terminal and ground.

Terminal	Wire color	Item	Condition		Data (Approx.)
25	G/R	Shift solenoid valve B		When shift solenoid valve B operates. (When driving in 1st or 5th gear.)	Battery voltage
				When shift solenoid valve B does not operate.	0V
26	G	Shift solenoid valve D		When shift solenoid valve D operates. (When driving in 3rd, 4th or 5th gear.)	Battery voltage
				When shift solenoid valve D does not operate.	0V
28	W	Pressure control solenoid valve C ground		When engine is running with idle speed and setting selector lever to “P” position.	0V
35	L/Y	Pressure control solenoid valve A		When engine is running with idle speed and setting selector lever to “P” position.	300Hz
37	R/B	Shift solenoid valve C		When shift solenoid valve C operates. (When driving in 1st, 2nd, 3rd or reverse gear.)	Battery voltage
				When shift solenoid valve C does not operate.	0V
40	L/G	Pressure control solenoid valve A ground		When engine is running with idle speed and setting selector lever to “P” position.	0V
45	O/B	Pressure control solenoid valve C		When engine is running with idle speed and setting selector lever to “P” position.	300Hz
46	W/G	Shift solenoid valve A		When shift solenoid valve A operates. (When driving in 1st gear.)	Battery voltage
				When shift solenoid valve A does not operate.	0V

Diagnostic Procedure

UCS002LJ

1. CHECK EACH SHIFT SOLENOID VALVE CIRCUIT

Perform “Diagnostic Procedure” for the following DTCs.

- “DTC P0750 SHIFT SOLENOID VALVE A” (Refer to AT-521, "Diagnostic Procedure" .)
- “DTC P0755 SHIFT SOLENOID VALVE B” (Refer to AT-526, "Diagnostic Procedure" .)
- “DTC P0760 SHIFT SOLENOID VALVE C” (Refer to AT-531, "Diagnostic Procedure" .)
- “DTC P0765 SHIFT SOLENOID VALVE D” (Refer to AT-541, "Diagnostic Procedure" .)

OK or NG

OK >> GO TO 2.
NG >> Repair or replace damaged parts.

2. CHECK EACH PRESSURE CONTROL SOLENOID VALVE CIRCUIT

Perform “Diagnostic Procedure” for the following DTCs.

- “DTC P0745 PRESSURE CONTROL SOLENOID VALVE A” (Refer to AT-516, "Diagnostic Procedure" .)
- “DTC P0795 PRESSURE CONTROL SOLENOID VALVE C” (Refer to AT-560, "Diagnostic Procedure" .)

OK or NG

OK >> GO TO 3.
NG >> Repair or replace damaged parts.

3. CHECK MALFUNCTIONING ITEM

1. Control valve assembly. Refer to AT-611, "Control Valve Assembly" .
2. Disassembly A/T. Refer to AT-628, "DISASSEMBLY" .
3. Check the following item:

- U/D brake. Refer to AT-628, "DISASSEMBLY" .
- 2nd coast brake. Refer to AT-648, "Oil Pump, 2nd Coast Brake & 2nd Brake" , AT-654, "One-Way Clutch Outer Race Sub Assembly & 2nd Coast Brake Hub & One-Way Clutch No.1" .
- 2nd brake. Refer to AT-648, "Oil Pump, 2nd Coast Brake & 2nd Brake" .
- One-way clutch No.1. Refer to AT-654, "One-Way Clutch Outer Race Sub Assembly & 2nd Coast Brake Hub & One-Way Clutch No.1" .
- One-way clutch No.2. Refer to AT-628, "DISASSEMBLY" .
- B5 brake. Refer to AT-657, "Transaxle Case Cover & B5 Brake" .

OK or NG

OK >> GO TO 4.
NG >> Repair or replace damaged parts.

4. CHECK DTC

Perform “DTC Confirmation Procedure”. Refer to AT-488, "DTC Confirmation Procedure" .

OK or NG

OK >> **INSPECTION END**
NG >> Replace control valve assembly. Refer to AT-611, "Control Valve Assembly" .

DTC P0733 A/T 3RD GEAR FUNCTION

PFP:31940

Description

UCS0012D

- This malfunction will not be detected while the O/D OFF indicator lamp is indicating another self-diagnosis malfunction.
- This malfunction is detected when the A/T does not shift into third gear position as instructed by the TCM. This is not caused by electrical malfunction (circuits open or shorted) but by mechanical malfunction such as control valve sticking, improper solenoid valve operation, etc.

Gear position		Shift solenoid valve				
		A	B	C	D	E
3rd	D	OFF (Open)	OFF (Closed)	ON (Open)	ON (Closed)	OFF (Closed)
	L	OFF (Open)	OFF (Closed)	ON (Open)	ON (Closed)	OFF (Closed)

On Board Diagnosis Logic

UCS0012E

- This is an OBD-II self-diagnostic item.
- Diagnostic trouble code “A/T 3RD GR FNCTN” with CONSULT-II or P0733 without CONSULT-II is detected when A/T cannot be shifted to the 3rd gear position even if electrical circuit is good.

Possible Cause

UCS002LR

- Shift solenoid valve A
  (On stick.)
- Shift solenoid valve B
  (On stick.)
- Shift solenoid valve C
  (Off stick.)
- Shift solenoid valve D
  (Off stick.)
- Pressure control solenoid valve A
  (On stick.)
- B5 brake
- U/D clutch
- U/D brake
- Hydraulic control circuit

DTC Confirmation Procedure

UCS0014O

CAUTION:

- **Always drive vehicle at a safe speed.**
- **Be careful not to rev engine into the red zone on the tachometer.**

NOTE:

If “DTC Confirmation Procedure” has been previously performed, always turn ignition switch “OFF” and wait at least 10 seconds before performing the next test.

After the repair, perform the following procedure to confirm the malfunction is eliminated.

WITH CONSULT-II

1. Start engine and select “DATA MONITOR” mode for “A/T” with CONSULT-II.
2. Make sure that ATF temperature is within the range below.
   FLUID TEMP: More than 20°C (68°F)
   If out of range, drive the vehicle to warm up the fluid.
3. Accelerate vehicle to maintain the following conditions for at least 12 consecutive seconds.
   SLCT LVR POSI: “D” position
   GEAR: 3rd position

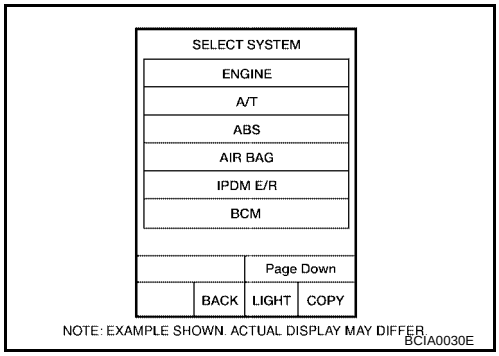

[Vehicle speed and accelerator angle: 3rd gear position retainable condition. (Refer to AT-695, "VEHICLE SPEED WHEN SHIFTING GEARS" .)]
Driving location: Driving the vehicle uphill (increased engine load) will help maintain the driving conditions required for this test.

4. If DTC is detected, go to AT-498, "Diagnostic Procedure" .

WITH GST

Follow the procedure “With CONSULT-II”.

Wiring Diagram — AT — 3RDSIG

UCS0012H

AT-3RDSIG-01

: DETECTABLE LINE FOR DTC
: NON-DETECTABLE LINE FOR DTC

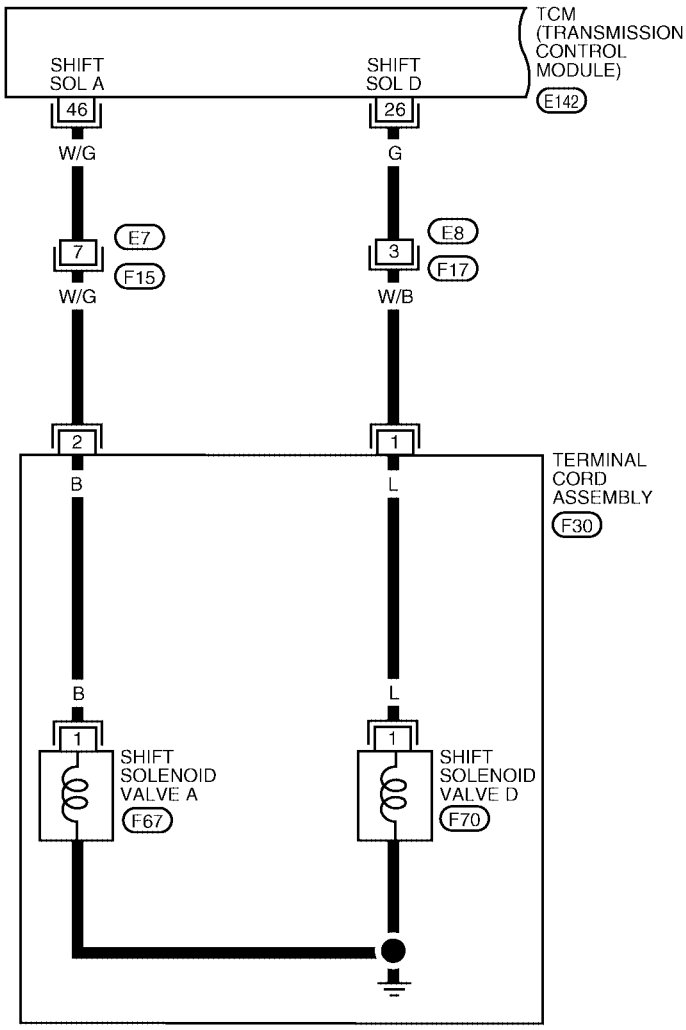

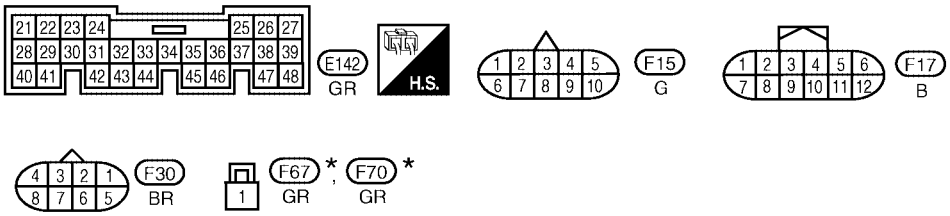

*: THIS CONNECTOR IS NOT SHOWN IN “HARNESS LAYOUT”.

BCWA0201E

AT-3RDSIG-02

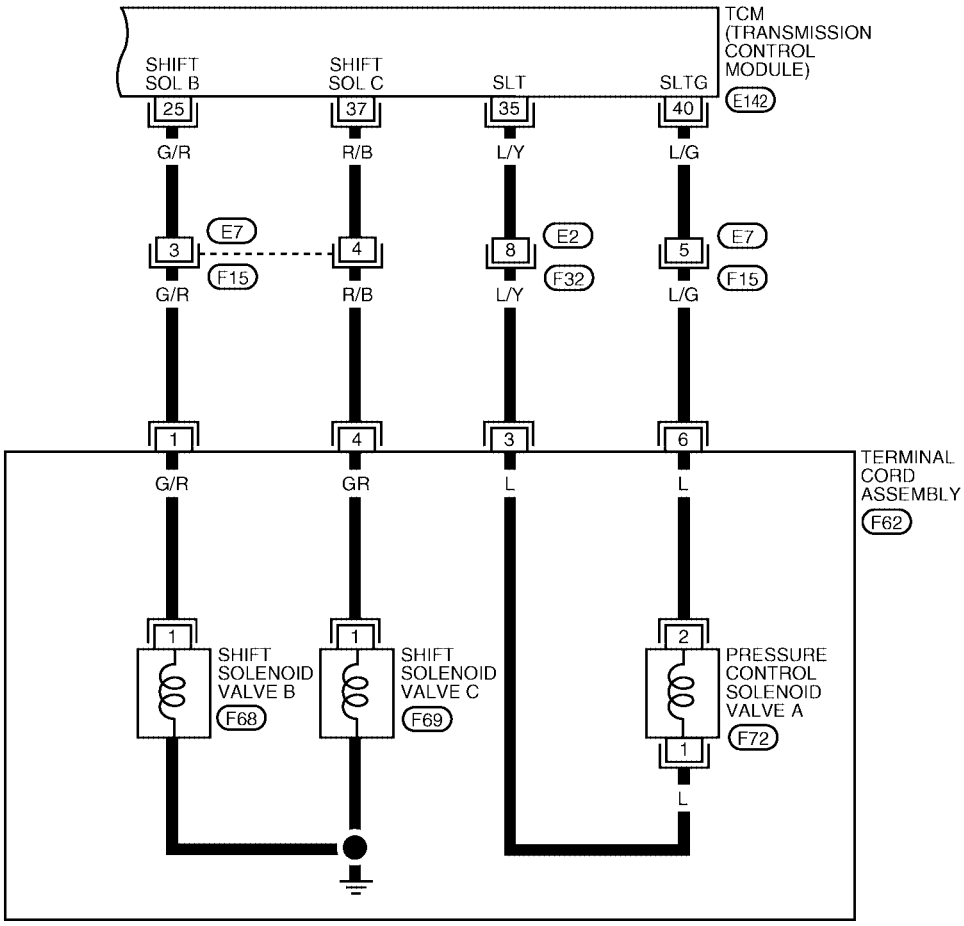

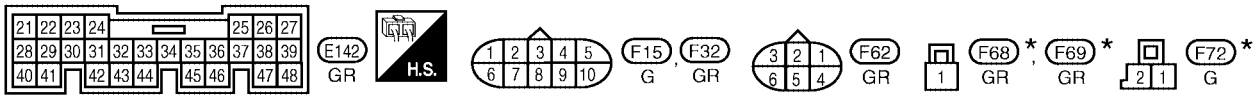

*: THIS CONNECTOR IS NOT SHOWN IN "HARNESS LAYOUT".

BCWA0202E

TCM terminals and data are reference value. Measured between each terminal and ground.

Terminal	Wire color	Item	Condition		Data (Approx.)
25	G/R	Shift solenoid valve B		When shift solenoid valve B operates. (When driving in 1st or 5th gear.)	Battery voltage
				When shift solenoid valve B does not operate.	0V
26	G	Shift solenoid valve D		When shift solenoid valve D operates. (When driving in 3rd, 4th or 5th gear.)	Battery voltage
				When shift solenoid valve D does not operate.	0V
35	L/Y	Pressure control solenoid valve A		When engine is running with idle speed and setting selector lever to “P” position.	300Hz
37	R/B	Shift solenoid valve C		When shift solenoid valve C operates. (When driving in 1st, 2nd, 3rd or reverse gear.)	Battery voltage
				When shift solenoid valve C does not operate.	0V
40	L/G	Pressure control solenoid valve A ground		When engine is running with idle speed and setting selector lever to “P” position.	0V
46	W/G	Shift solenoid valve A		When shift solenoid valve A operates. (When driving in 1st gear.)	Battery voltage
				When shift solenoid valve A does not operate.	0V

Diagnostic Procedure

UCS002LK

1. CHECK EACH SHIFT SOLENOID VALVE CIRCUIT

Perform “Diagnostic Procedure” for the following DTCs.

- “DTC P0750 SHIFT SOLENOID VALVE A” (Refer to AT-521, "Diagnostic Procedure" .)
- “DTC P0755 SHIFT SOLENOID VALVE B” (Refer to AT-526, "Diagnostic Procedure" .)
- “DTC P0760 SHIFT SOLENOID VALVE C” (Refer to AT-531, "Diagnostic Procedure" .)
- “DTC P0765 SHIFT SOLENOID VALVE D” (Refer to AT-541, "Diagnostic Procedure" .)

OK or NG

OK >> GO TO 2.
NG >> Repair or replace damaged parts.

2. CHECK PRESSURE CONTROL SOLENOID VALVE A CIRCUIT

Perform “Diagnostic Procedure” for DTC P0745. Refer to AT-516, "Diagnostic Procedure" .

OK or NG

OK >> GO TO 3.
NG >> Repair or replace damaged parts.

3. CHECK MALFUNCTIONING ITEM

1. Control valve assembly. Refer to AT-611, "Control Valve Assembly" .
2. Disassembly A/T. Refer to AT-628, "DISASSEMBLY" .
3. Check the following item:

- B5 brake. Refer to AT-657, "Transaxle Case Cover & B5 Brake" .
- U/D clutch. Refer to AT-628, "DISASSEMBLY" .
- U/D brake. Refer to AT-628, "DISASSEMBLY" .

OK or NG

OK >> GO TO 4.
NG >> Repair or replace damaged parts.

4. CHECK DTC

Perform “DTC Confirmation Procedure”. Refer to AT-494, "DTC Confirmation Procedure" .

OK or NG

OK >> **INSPECTION END**
NG >> Replace the control valve assembly. Refer to AT-611, "Control Valve Assembly" .

DTC P0734 A/T 4TH GEAR FUNCTION

PFP:31940

Description

UCS0012J

- This malfunction will not be detected while the O/D OFF indicator lamp is indicating another self-diagnosis malfunction.
- This malfunction is detected when the A/T does not shift into fourth gear position as instructed by the TCM. This is not caused by electrical malfunction (circuits open or shorted) but by mechanical malfunction such as control valve sticking, improper solenoid valve operation, etc.

Gear position		Shift solenoid valve				
		A	B	C	D	E
4th	D	OFF (Open)	OFF (Closed)	OFF (Closed)	ON (Closed)	OFF (Closed)

On Board Diagnosis Logic

UCS0012K

- This is an OBD-II self-diagnostic item.
- Diagnostic trouble code “A/T 4TH GR FNCTN” with CONSULT-II or P0734 without CONSULT-II is detected when A/T cannot be shifted to the 4th gear position even if electrical circuit is good.

Possible Cause

UCS002LS

- Shift solenoid valve A
  (On stick.)
- Shift solenoid valve B
  (On stick.)
- Shift solenoid valve C
  (On stick.)
- Pressure control solenoid valve A
  (On stick.)
- Forward and direct clutch assembly
- U/D clutch
- U/D brake
- 2nd coast brake
- One-way clutch No.1
- Hydraulic control circuit

DTC Confirmation Procedure

UCS0014P

CAUTION:

- **Always drive vehicle at a safe speed.**
- **Be careful not to rev engine into the red zone on the tachometer.**

NOTE:
If “DTC Confirmation Procedure” has been previously performed, always turn ignition switch “OFF” and wait at least 10 seconds before performing the next test.
After the repair, perform the following procedure to confirm the malfunction is eliminated.

WITH CONSULT-II

1. Start engine and select “DATA MONITOR” mode for “A/T” with CONSULT-II.
2. Make sure that ATF temperature is within the range below.
   FLUID TEMP: More than 20°C (68°F)
   If out of range, drive the vehicle to warm up the fluid.
3. Accelerate vehicle to maintain the following conditions for at least 12 consecutive seconds.
   SLCT LVR POSI: “D” position
   GEAR: 4th position
   [Vehicle speed and accelerator angle: 4th gear position retainable condition. (Refer to AT-695, "VEHICLE SPEED WHEN SHIFTING GEARS" .)]

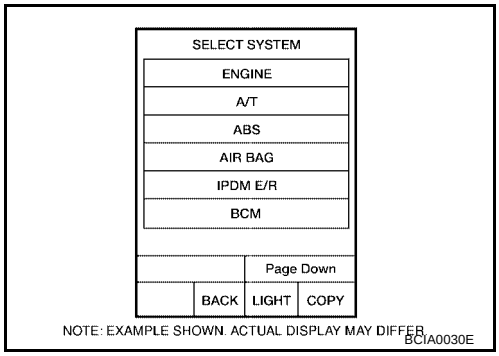

Driving location: Driving the vehicle uphill (increased engine load) will help maintain the driving conditions required for this test.

4. If DTC is detected, go to AT-503, "Diagnostic Procedure" .

WITH GST

Follow the procedure “With CONSULT-II”.

Wiring Diagram — AT — 4THSIG

UCS0012N

AT-4THSIG-01

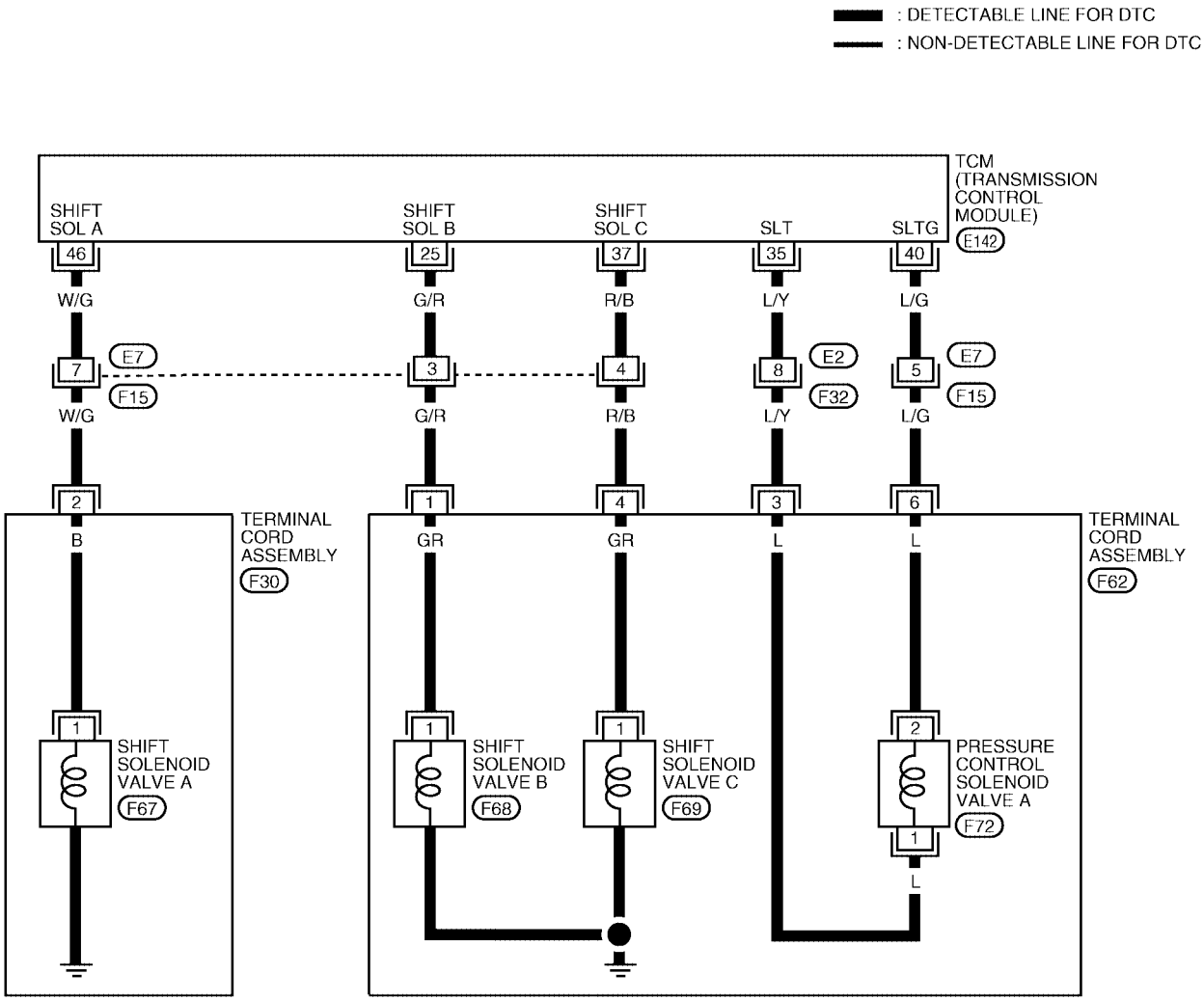

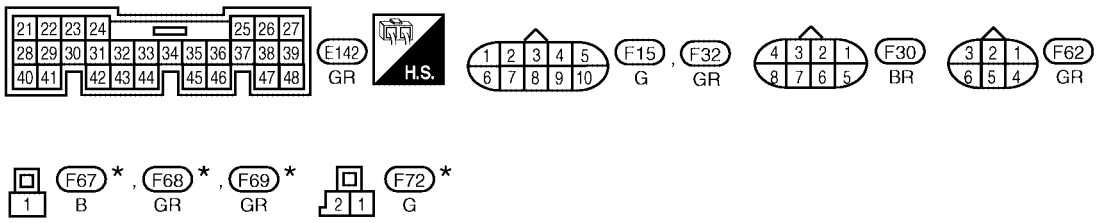

*: THIS CONNECTOR IS NOT SHOWN IN "HARNESS LAYOUT" OF PG SECTION.

BCWA0203E

TCM terminals and data are reference value. Measured between each terminal and ground.

Terminal	Wire color	Item	Condition		Data (Approx.)
25	G/R	Shift solenoid valve B		When shift solenoid valve B operates. (When driving in 1st or 5th gear.)	Battery voltage
				When shift solenoid valve B does not operate.	0V
35	L/Y	Pressure control solenoid valve A		When engine is running with idle speed and setting selector lever to “P” position.	300Hz
37	R/B	Shift solenoid valve C		When shift solenoid valve C operates. (When driving in 1st, 2nd, 3rd or reverse gear.)	Battery voltage
				When shift solenoid valve C does not operate.	0V
40	L/G	Pressure control solenoid valve A ground		When engine is running with idle speed and setting selector lever to “P” position.	0V
46	W/G	Shift solenoid valve A		When shift solenoid valve A operates. (When driving in 1st gear.)	Battery voltage
				When shift solenoid valve A does not operate.	0V

Diagnostic Procedure

UCS002LL

1. CHECK EACH SHIFT SOLENOID VALVE CIRCUIT

Perform “Diagnostic Procedure” for the following DTCs.

- “DTC P0750 SHIFT SOLENOID VALVE A” (Refer to AT-521, "Diagnostic Procedure" .)
- “DTC P0755 SHIFT SOLENOID VALVE B” (Refer to AT-526, "Diagnostic Procedure" .)
- “DTC P0760 SHIFT SOLENOID VALVE C” (Refer to AT-531, "Diagnostic Procedure" .)

OK or NG

OK >> GO TO 2.
NG >> Repair or replace damaged parts.

2. CHECK PRESSURE CONTROL SOLENOID VALVE A CIRCUIT

Perform “Diagnostic Procedure” for DTC P0745. Refer to AT-516, "Diagnostic Procedure" .

OK or NG

OK >> GO TO 3.
NG >> Repair or replace damaged parts.

3. CHECK MALFUNCTIONING ITEM

1. Control valve assembly. Refer to AT-611, "Control Valve Assembly" .
2. Disassembly A/T. Refer to AT-628, "DISASSEMBLY" .
3. Check the following item:

- Forward and direct clutch assembly. Refer to AT-628, "DISASSEMBLY" .
- 2nd coast brake. Refer to AT-648, "Oil Pump, 2nd Coast Brake & 2nd Brake" , AT-654, "One-Way Clutch Outer Race Sub Assembly & 2nd Coast Brake Hub & One-Way Clutch No.1" .
- U/D brake. Refer to AT-628, "DISASSEMBLY" .
- U/D clutch. Refer to AT-628, "DISASSEMBLY" .
- One-way clutch No.1. Refer to AT-654, "One-Way Clutch Outer Race Sub Assembly & 2nd Coast Brake Hub & One-Way Clutch No.1" .

OK or NG

OK >> GO TO 4.
NG >> Repair or replace damaged parts.

4. CHECK DTC

Perform “DTC Confirmation Procedure”. Refer to AT-500, "DTC Confirmation Procedure" .

OK or NG

OK >> **INSPECTION END**
NG >> Replace the control valve assembly. Refer to AT-611, "Control Valve Assembly" .

DTC P0735 A/T 5TH GEAR FUNCTION

PFP:31940

Description

UCS0012P

- This malfunction will not be detected while the O/D OFF indicator lamp is indicating another self-diagnosis malfunction.
- This malfunction is detected when the A/T does not shift into fifth gear position as instructed by the TCM. This is not caused by electrical malfunction (circuits open or shorted) but by mechanical malfunction such as control valve sticking, improper solenoid valve operation, etc.

Gear position		Shift solenoid valve				
		A	B	C	D	E
5th	D	OFF (Open)	ON (Open)	OFF (Closed)	ON (Closed)	OFF (Closed)

On Board Diagnosis Logic

UCS0012Q

- This is an OBD-II self-diagnostic item.
- Diagnostic trouble code “A/T 5TH GR FNCTN” with CONSULT-II or P0735 without CONSULT-II is detected when A/T cannot be shifted to the 5th gear position even if electrical circuit is good.

Possible Cause

UCS002LT

- Shift solenoid valve B
  (Off stick.)
- Shift solenoid valve C
  (On stick.)
- Shift solenoid valve E
  (On stick.)
- Pressure control solenoid valve A
  (On stick.)
- Pressure control solenoid valve B
  (On stick.)
- Forward and direct clutch assembly
- Direct clutch
- 2no coast brake
- One-way clutch No.1
- Hydraulic control circuit

DTC Confirmation Procedure

UCS0014Q

CAUTION:

- **Always drive vehicle at a safe speed.**
- **Be careful not to rev engine into the red zone on the tachometer.**

NOTE:

If “DTC Confirmation Procedure” has been previously performed, always turn ignition switch “OFF” and wait at least 10 seconds before performing the next test.

After the repair, perform the following procedure to confirm the malfunction is eliminated.

WITH CONSULT-II

1. Start engine and select “DATA MONITOR” mode for “A/T” with CONSULT-II.
2. Make sure that ATF temperature is within the range below.
   FLUID TEMP: More than 20°C (68°F)
   If out of range, drive the vehicle to warm up the fluid.
3. Accelerate vehicle to maintain the following conditions for at least 12 consecutive seconds.
   SLCT LVR POSI: “D” position
   GEAR: 5th position

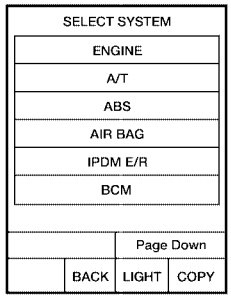

NOTE: EXAMPLE SHOWN. ACTUAL DISPLAY MAY DIFFER.
BCIA0030E

[Vehicle speed and accelerator angle: 5th gear position retainable condition. (Refer to AT-695, "VEHICLE SPEED WHEN SHIFTING GEARS" .)]
Driving location: Driving the vehicle uphill (increased engine load) will help maintain the driving conditions required for this test.

4. If DTC is detected, go to AT-509, "Diagnostic Procedure" .

WITH GST

Follow the procedure “With CONSULT-II”.

Wiring Diagram — AT — 5THSIG

UCS0012T

AT-5THSIG-01

: DETECTABLE LINE FOR DTC
: NON-DETECTABLE LINE FOR DTC

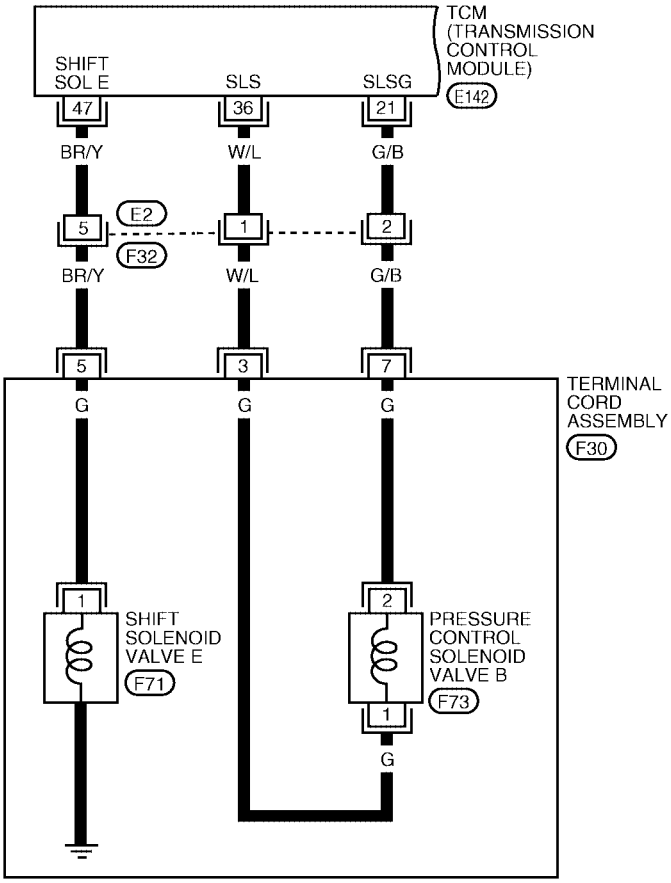

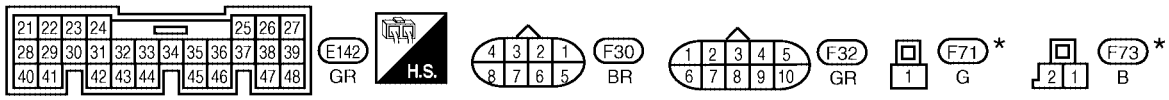

*: THIS CONNECTOR IS NOT SHOWN IN "HARNESS LAYOUT" OF PG SECTION.

BCWA0204E

AT-5THSIG-02

: DETECTABLE LINE FOR DTC
: NON-DETECTABLE LINE FOR DTC

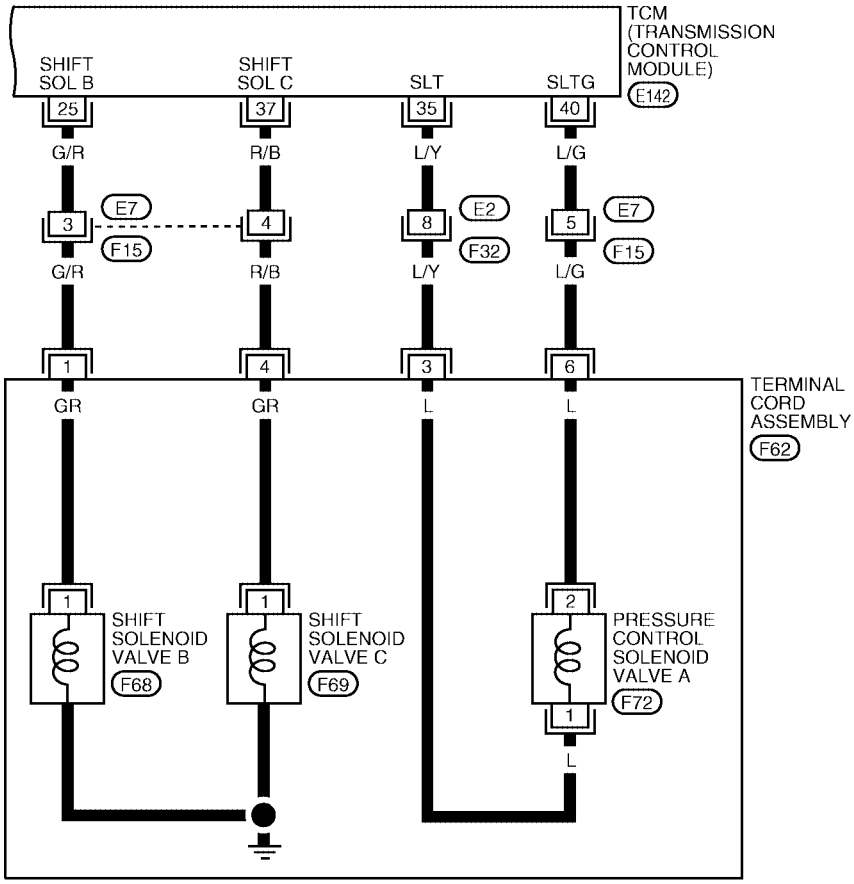

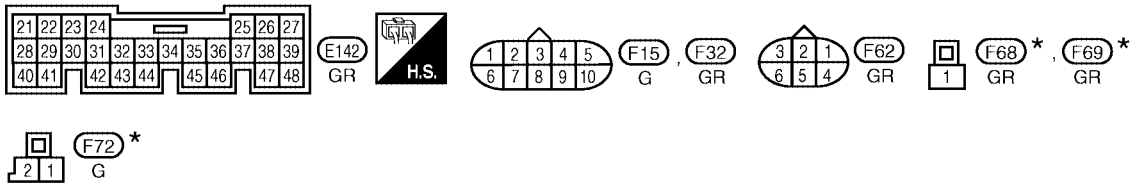

*: THIS CONNECTOR IS NOT SHOWN IN "HARNESS LAYOUT" OF PG SECTION.

BCWA0205E

TCM terminals and data are reference value. Measured between each terminal and ground.

Terminal	Wire color	Item	Condition		Data (Approx.)
21	G/B	Pressure control solenoid valve B ground		When engine is running with idle speed and setting selector lever to “P” position.	0V
25	G/R	Shift solenoid valve B		When shift solenoid valve B operates. (When driving in 1st or 5th gear.)	Battery voltage
				When shift solenoid valve B does not operate.	0V
35	L/Y	Pressure control solenoid valve A		When engine is running with idle speed and setting selector lever to “P” position.	300Hz
36	W/L	Pressure control solenoid valve B		When engine is running with idle speed and setting selector lever to “P” position.	300Hz
37	R/B	Shift solenoid valve C		When shift solenoid valve C operates. (When driving in 1st, 2nd, 3rd or reverse gear.)	Battery voltage
				When shift solenoid valve C does not operate.	0V
40	L/G	Pressure control solenoid valve A ground		When engine is running with idle speed and setting selector lever to “P” position.	0V
47	BR/Y	Shift solenoid valve E		When shift solenoid valve E operates. (When driving in reverse gear.)	Battery voltage
				When shift solenoid valve E does not operate.	0V

Diagnostic Procedure

UCS002LM

1. CHECK EACH SHIFT SOLENOID VALVE CIRCUIT

Perform “Diagnostic Procedure” for the following DTCs.

- “DTC P0755 SHIFT SOLENOID VALVE B” (Refer to AT-526, "Diagnostic Procedure" .)
- “DTC P0760 SHIFT SOLENOID VALVE C” (Refer to AT-531, "Diagnostic Procedure" .)
- “DTC P0770 SHIFT SOLENOID VALVE E” (Refer to AT-546, "Diagnostic Procedure" .)

OK or NG

OK >> GO TO 2.
NG >> Repair or replace damaged parts.

2. CHECK EACH PRESSURE CONTROL SOLENOID VALVE CIRCUIT

Perform “Diagnostic Procedure” for the following DTCs.

- “DTC P0745 PRESSURE CONTROL SOLENOID VALVE A” (Refer to AT-516, "Diagnostic Procedure" .)
- “DTC P0775 PRESSURE CONTROL SOLENOID VALVE B” (Refer to AT-551, "Diagnostic Procedure" .)

OK or NG

OK >> GO TO 3.
NG >> Repair or replace damaged parts.

3. CHECK MALFUNCTIONING ITEM

1. Control valve assembly. Refer to AT-611, "Control Valve Assembly" .
2. Disassembly A/T. Refer to AT-628, "DISASSEMBLY" .
3. Check the following item:

- Forward and direct clutch assembly. Refer to AT-628, "DISASSEMBLY" .
- 2nd brake. Refer to AT-648, "Oil Pump, 2nd Coast Brake & 2nd Brake" .
- One-way clutch No.1. Refer to AT-654, "One-Way Clutch Outer Race Sub Assembly & 2nd Coast Brake Hub & One-Way Clutch No.1" .

OK or NG

OK >> GO TO 4.
NG >> Repair or replace damaged parts.

4. CHECK DTC

Perform “DTC Confirmation Procedure”. Refer to AT-505, "DTC Confirmation Procedure" .

OK or NG

OK >> **INSPECTION END**
NG >> Replace the control valve assembly. Refer to AT-611, "Control Valve Assembly" .

DTC P0744 A/T TCC S/V FUNCTION (LOCK-UP)

PFP:31940

Description

UCS000V1

- This malfunction will not be detected while the O/D OFF indicator lamp is indicating another self-diagnosis malfunction.
- This malfunction is detected when the torque converter clutch does not lock up as instructed by the TCM. This is not caused by electrical malfunction (circuits open or shorted) but by mechanical malfunction such as control valve sticking, improper solenoid valve operation, malfunctioning oil pump or torque converter clutch, etc.

On Board Diagnosis Logic

UCS000V2

- This is an OBD-II self-diagnostic item.
- Diagnostic trouble code “A/T TCC S/V FNCTN” with CONSULT-II or P0744 without CONSULT-II is detected when A/T cannot perform lock-up even if electrical circuit is good.

Possible Cause

UCS000V3

- Shift solenoid valve D
  (Off stick.)
- Pressure control solenoid valve C
  (Off stick.)
- Torque converter clutch
- Hydraulic control circuit

DTC Confirmation Procedure

UCS000V4

CAUTION:

- **Always drive vehicle at a safe speed.**
- **Be careful not to rev engine into the red zone on the tachometer.**

NOTE:
If “DTC Confirmation Procedure” has been previously performed, always turn ignition switch “OFF” and wait at least 10 seconds before performing the next test.
After the repair, perform the following procedure to confirm the malfunction is eliminated.

WITH CONSULT-II

1. Start engine and select “DATA MONITOR” mode for “A/T” with CONSULT-II.
2. Make sure that ATF temperature is within the range below.
   FLUID TEMP: More than 20°C (68°F)
   If out of range, drive the vehicle to warm up the fluid.
3. Accelerate vehicle to more than 100 km/h (62 MPH) and maintain the following conditions for at least 12 consecutive seconds.
   SLCT LVR POSI: “D” position
   GEAR: 5th position
   SLIP REV: Less than 100 rpm
   ACCELE ANGLE: More than 5 %
   LOCK-UP: ON (Refer to **AT-696, "VEHICLE SPEED WHEN PERFORMING AND RELEASING COMPLETE LOCK-UP"** **.)**
   [Vehicle speed: Constant speed of more than 100 km/h (62 MPH).]
   Driving location: Driving the vehicle uphill (increased engine load) will help maintain the driving conditions required for this test.

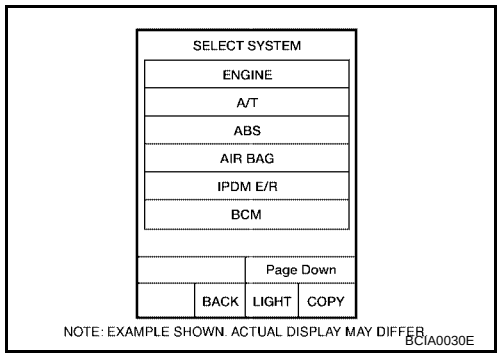

4. If DTC is detected, go to AT-513, "Diagnostic Procedure" .

WITH GST

Follow the procedure “With CONSULT-II”.

Wiring Diagram — AT — TCCSIG

UCS000V5

AT-TCCSIG-01

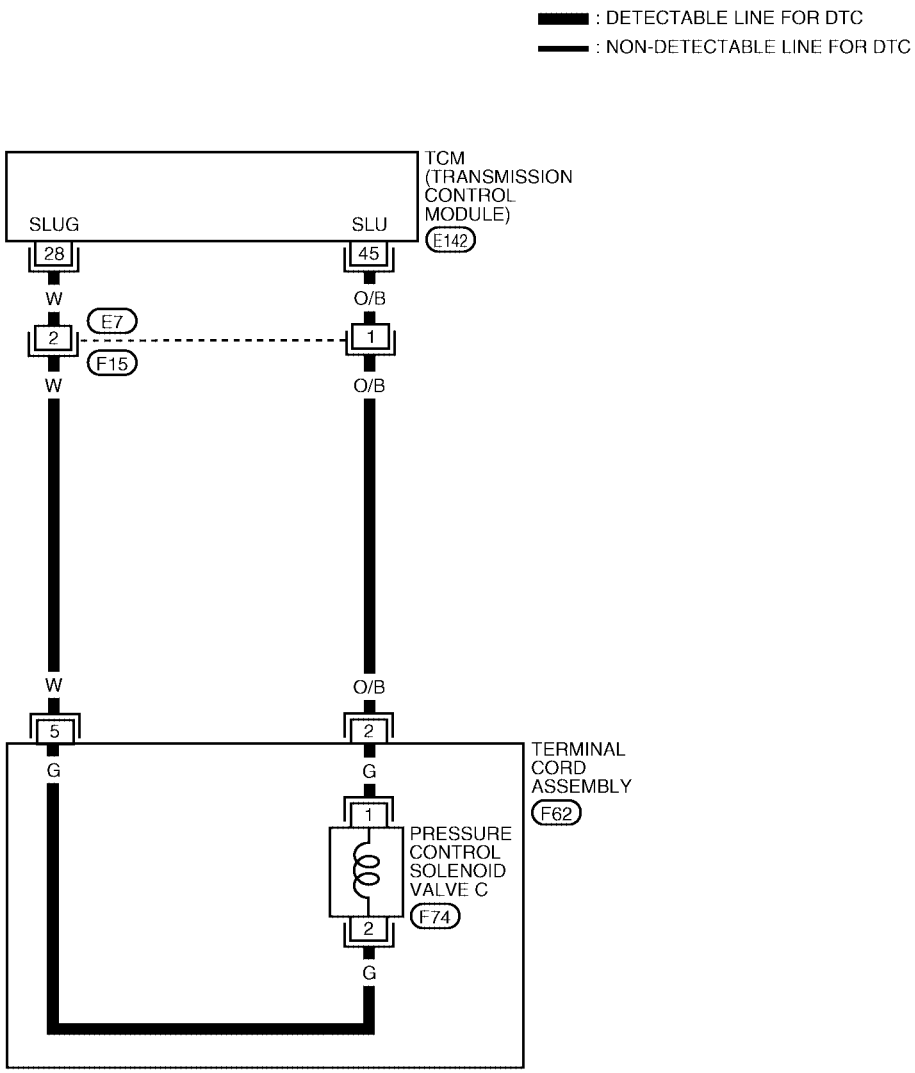

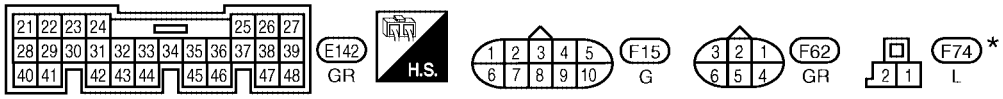

*: THIS CONNECTOR IS NOT SHOWN IN "HARNESS LAYOUT" OF PG SECTION.

BCWA0206E

TCM terminals and data are reference value. Measured between each terminal and ground.

Terminal	Wire color	Item	Condition		Data (Approx.)
28	W	Pressure control solenoid valve C ground		When engine is running with idle speed and setting selector lever to “P” position.	0V
45	O/B	Pressure control solenoid valve C		When engine is running with idle speed and setting selector lever to “P” position.	300Hz

Diagnostic Procedure

UCS002LN

1. CHECK SHIFT SOLENOID VALVE D CIRCUIT

Perform “Diagnostic Procedure” for DTC P0765. Refer to AT-541, "Diagnostic Procedure" .

OK or NG

OK >> GO TO 2.
NG >> Repair or replace damaged parts.

2. CHECK PRESSURE CONTROL SOLENOID VALVE C CIRCUIT

Perform “Diagnostic Procedure” for DTC P0795. Refer to AT-560, "Diagnostic Procedure" .

OK or NG

OK >> GO TO 3.
NG >> Repair or replace damaged parts.

3. CHECK MALFUNCTIONING ITEM

1. Control valve assembly. Refer to AT-611, "Control Valve Assembly" .
2. Disassembly A/T. Refer to AT-628, "DISASSEMBLY" .
3. Check the following item:

– Torque converter clutch. Refer to AT-628, "DISASSEMBLY" .

OK or NG

OK >> GO TO 4.
NG >> Repair or replace damaged parts.

4. CHECK DTC

Perform “DTC Confirmation Procedure”. Refer to AT-511, "DTC Confirmation Procedure" .

OK or NG

OK >> **INSPECTION END**
NG >> Replace the control valve assembly. Refer to AT-611, "Control Valve Assembly" .

DTC P0745 PRESSURE CONTROL SOLENOID VALVE A (LINE PRESSURE)

PFP:31940

Description

UCS000V7

- The pressure control solenoid valve A is normally high, 3-port linear pressure control solenoid.
- The pressure control solenoid valve A regulates the oil pump discharge pressure to suit the driving condition in response to a signal sent from the TCM.

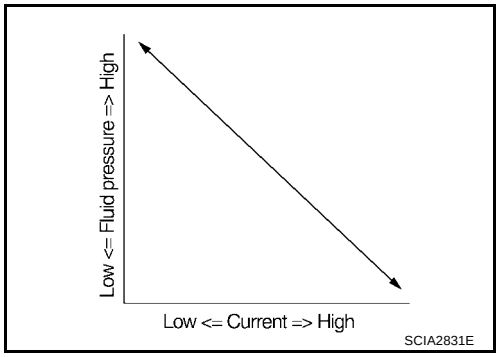

On Board Diagnosis Logic

UCS000V8

- This is an OBD-II self-diagnostic item.
- Diagnostic trouble code “PC SOL A(L/PRESS)” with CONSULT-II or P0745 without CONSULT-II is detected under the following conditions.
  - When normal voltage is not applied to solenoid due to open, short, and so on.
  - When TCM detects as irregular by comparing target value with monitor value.

Possible Cause

UCS000V9

- Harness or connectors
  (The solenoid circuit is open or shorted.)
- Pressure control solenoid valve A

DTC Confirmation Procedure

UCS000VA

NOTE:
If “DTC Confirmation Procedure” has been previously performed, always turn ignition switch “OFF” and wait at least 10 seconds before performing the next test.
After the repair, perform the following procedure to confirm the malfunction is eliminated.

WITH CONSULT-II

1. Turn ignition switch “ON”. (Do not start engine.)
2. Select “DATA MONITOR” mode for “A/T” with CONSULT-II.
3. Start engine.
4. Run engine for at least 13 consecutive seconds at idle speed.
5. If DTC is detected, go to AT-516, "Diagnostic Procedure" .

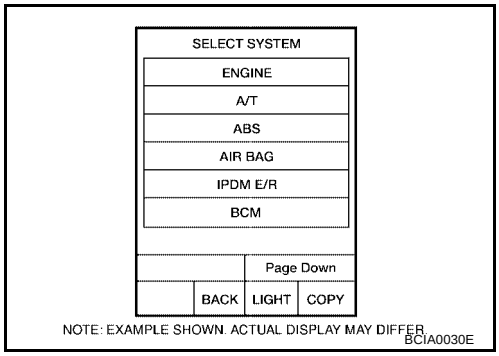

WITH GST

Follow the procedure “With CONSULT-II”.

Wiring Diagram — AT — PC/A

UCS000VB

AT-PC/A-01

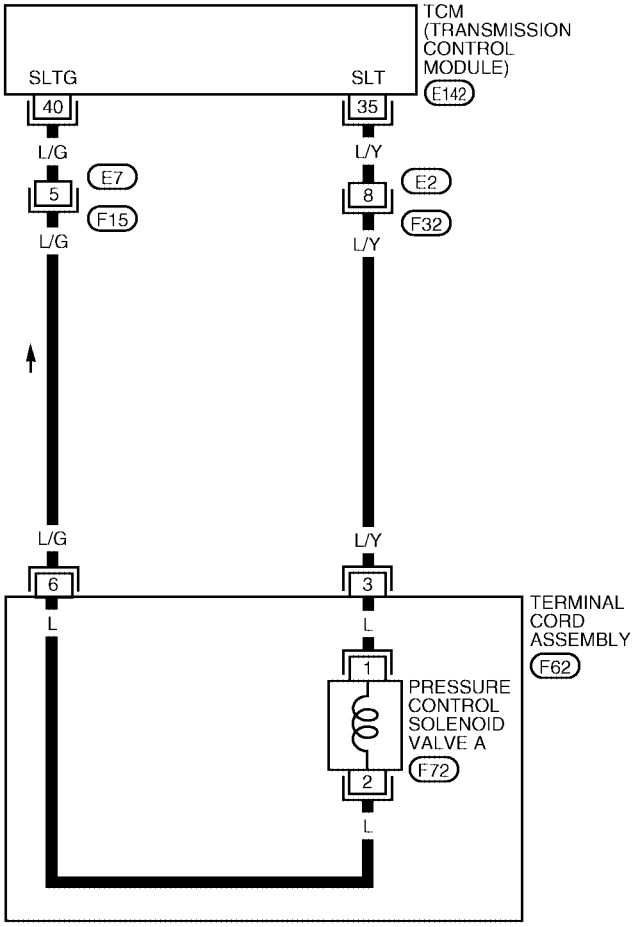

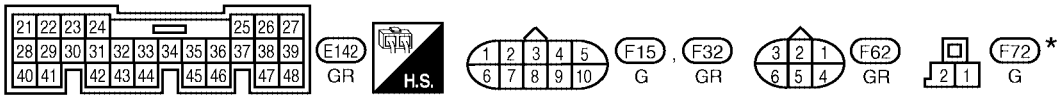

*: THIS CONNECTOR IS NOT SHOWN IN "HARNESS LAYOUT" OF PG SECTION.

BCWA0207E

TCM terminals and data are reference value. Measured between each terminal and ground.

Terminal	Wire color	Item	Condition		Data (Approx.)
35	L/Y	Pressure control solenoid valve A		When engine is running with idle speed and setting selector lever to “P” position.	300Hz
40	L/G	Pressure control solenoid valve A ground		When engine is running with idle speed and setting selector lever to “P” position.	0V

Diagnostic Procedure

UCS002LU

1. CHECK PRESSURE CONTROL SOLENOID VALVE A SIGNAL

With CONSULT-II

1. After warming up the engine and transaxle, turn ignition switch “OFF”.
2. Turn ignition switch “ON”. (Do not start engine.)
3. Select “DATA MONITOR” mode for “A/T” with CONSULT-II.
4. Read out the value of “PC SOL A OUT” and “PC SOL A MON”.

Monitor item	Condition	Display value (Approx.)
● PC SOL A OUT ● PC SOL A MON	When releasing accelerator pedal with setting selector lever to “P” position.	1.00 A
	When depressing accelerator pedal fully setting selector lever to “P” position.	0.32 A

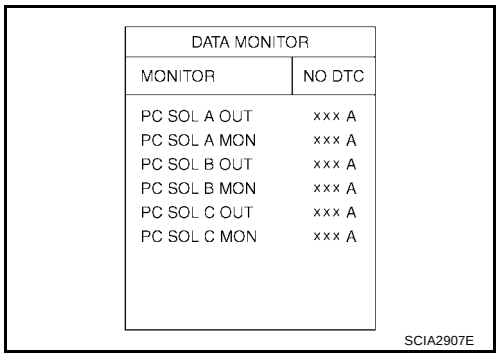

Without CONSULT-II

1. Start the engine.
2. Check pulse between TCM connector terminals 35 and 40.

Connector	Terminal (Wire color)	Condition	Data (Approx.)
E142	35 (L/Y) - 40 (L/G)	When engine is running with idle speed and setting selector lever to “P” position.	300 Hz

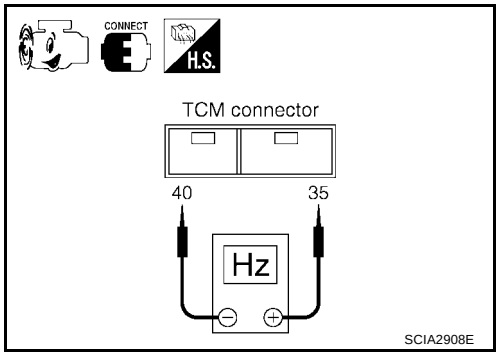

OK or NG

OK >> GO TO 7.
NG >> GO TO 2.

2. CHECK PRESSURE CONTROL SOLENOID VALVE A CIRCUIT

1. Turn ignition switch “OFF”.
2. Disconnect the TCM connector.
3. Check resistance between TCM connector terminals 35 and 40.

Connector	Terminal (Wire color)	Condition	Resistance (Approx.)
E142	35 (L/Y) - 40 (L/G)	Temperature: 20°C (68°F)	5.0 - 5.6 Ω

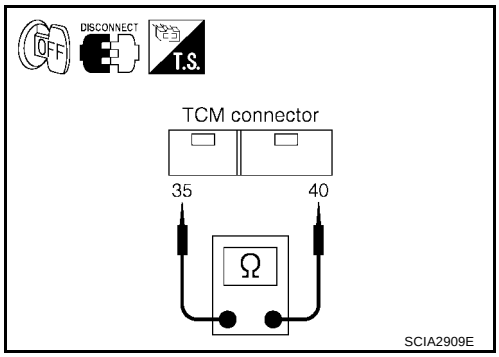

OK >> GO TO 7.
NG >> GO TO 3.

3. CHECK TERMINAL CORD ASSEMBLY WITH PRESSURE CONTROL SOLENOID VALVE A

1. Turn ignition switch “OFF”.
2. Disconnect terminal cord assembly harness connector.
3. Check resistance between terminals 3 and 6.

Connector	Terminal	Condition	Resistance (Approx.)
F62	3 - 6	Temperature: 20°C (68°F)	5.0 - 5.6 Ω

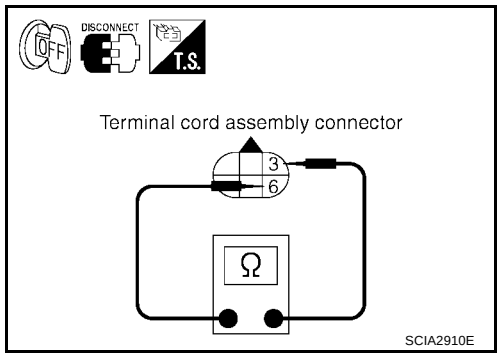

OK or NG

OK >> GO TO 4.
NG >> GO TO 5.

4. CHECK HARNESS BETWEEN TCM AND TERMINAL CORD ASSEMBLY

Check the following.

- Open or short-circuit in the harness between TCM and terminal cord assembly.

OK or NG

OK >> GO TO 7.
NG >> Repair or replace damaged parts.

5. CHECK PRESSURE CONTROL SOLENOID VALVE A

1. Remove side cover. Refer to AT-611, "Side cover" .
2. Disconnect pressure control solenoid valve A harness connector.
3. Check resistance between terminals 1 and 2.

Connector	Terminal	Condition	Resistance (Approx.)
F72	1 - 2	Temperature: 20°C (68°F)	5.0 - 5.6 Ω

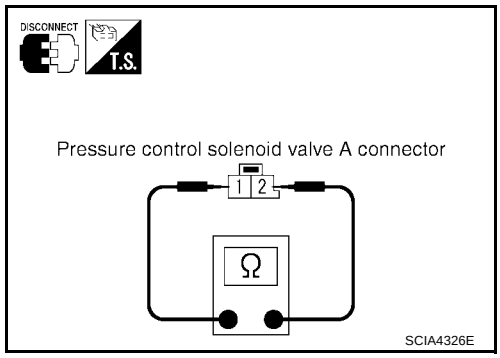

OK or NG

OK >> GO TO 6.
NG >> Replace the control valve assembly. Refer to AT-611, "Control Valve Assembly" .

6. CHECK HARNESS BETWEEN TERMINAL CORD ASSEMBLY AND PRESSURE CONTROL SOLENOID VALVE A

Check the following.

- Open or short-circuit in the harness between terminal cord assembly and pressure control solenoid valve A.

OK or NG

OK >> GO TO 7.
NG >> Repair or replace transmission wire. Refer to AT-611, "Transmission wire" .

7. CHECK DTC

Perform “DTC Confirmation Procedure”. Refer to AT-514, "DTC Confirmation Procedure" .

OK or NG

OK >> **INSPECTION END**
NG >> GO TO 8.

8. CHECK TCM

1. Check TCM input/output signal. Refer to AT-439, "TCM Input/Output Signal Reference Values" .
2. If NG, recheck TCM pin terminals for damage or loose connection with harness connector.

OK or NG

OK >> **INSPECTION END**
NG >> Repair or replace damaged parts.

Component Inspection

UCS002LV

PRESSURE CONTROL SOLENOID VALVE A

1. Remove side cover. Refer to AT-611, "Side cover" .
2. Disconnect pressure control solenoid valve A harness connector.
3. Check resistance between terminals 1 and 2.

Connector	Terminal	Condition	Resistance (Approx.)
F72	1 - 2	Temperature: 20°C (68°F)	5.0 - 5.6 Ω

4. If NG, replace the control valve assembly. Refer to AT-611, "Control Valve Assembly" .

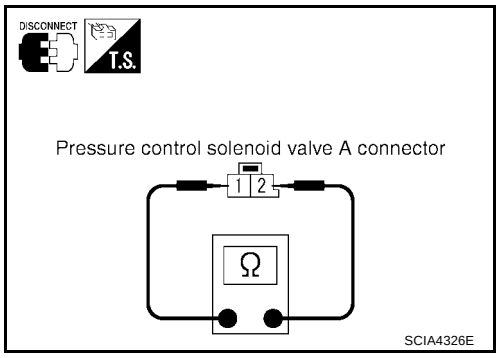

DTC P0750 SHIFT SOLENOID VALVE A

PFP:31940

Description

UCS00131

- Shift solenoid valves are installed directly in control valve body. The shift solenoid valves operates of ON and OFF by the control signal from TCM. Combinations of 5 shift solenoid valves, A, B, C, D and E, shifts gear positions.
- The shift solenoid valve A is a normally open, ON-OFF type solenoid.

Gear position	D_1 , L_1	D_2 , L_2	D_3 , L_3	D_4	D_5	Reverse
Shift solenoid valve A	ON (Closed)	OFF (Open)	OFF (Open)	OFF (Open)	OFF (Open)	OFF (Open)

On Board Diagnosis Logic

UCS00132

- This is an OBD-II self-diagnostic item.
- Diagnostic trouble code “SHIFT SOL A” with CONSULT-II or P0750 without CONSULT-II is detected under the following conditions.
  - When normal voltage is not applied to solenoid due to open, short, and so on.
  - When TCM detects as irregular by comparing target value with monitor value.

Possible Cause

UCS00133

- Harness or connectors
  (The solenoid circuit is open or shorted.)
- Shift solenoid valve A

DTC Confirmation Procedure

UCS00134

CAUTION:

- **Always drive vehicle at a safe speed.**
- **Be careful not to rev engine into the red zone on the tachometer.**

NOTE:

If “DTC Confirmation Procedure” has been previously performed, always turn ignition switch “OFF” and wait at least 10 seconds before performing the next test.

After the repair, perform the following procedure to confirm the malfunction is eliminated.

WITH CONSULT-II

1. Turn ignition switch “ON”. (Do not start engine.)
2. Select “DATA MONITOR” mode for “A/T” with CONSULT-II.
3. Start engine.
4. Drive vehicle and allow the following conditions.
   SLCT LVR POSI: “D” position
   GEAR: 1st ⇒ 2nd position
5. If DTC is detected, go to AT-521, "Diagnostic Procedure" .

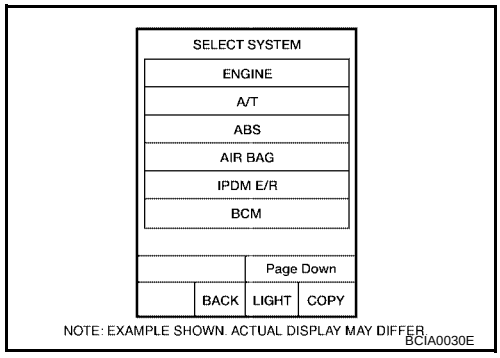

WITH GST

Follow the procedure “With CONSULT-II”.

Wiring Diagram — AT — SSV/A

UCS00135

AT-SSV/A-01

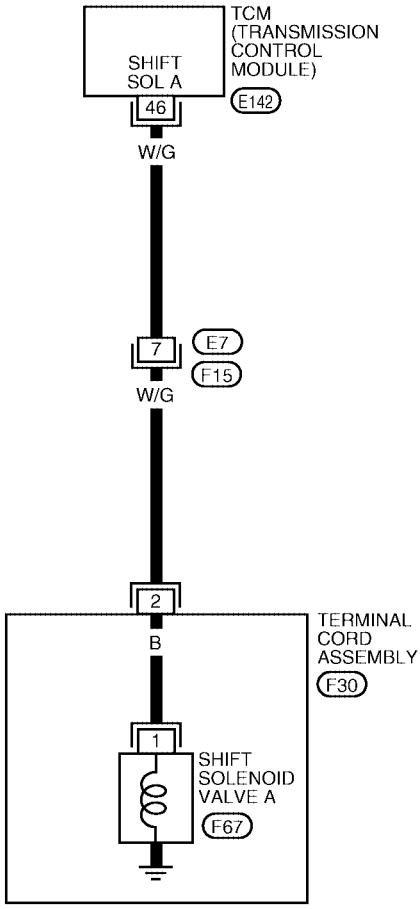

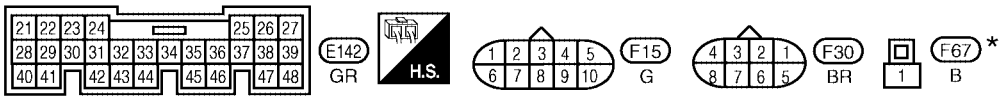

★: THIS CONNECTOR IS NOT SHOWN IN "HARNESS LAYOUT" OF PG SECTION.

BCWA0208E

TCM terminal and data are reference value. Measured between each terminal and ground.

Terminal	Wire color	Item	Condition		Data (Approx.)
46	W/G	Shift solenoid valve A		When shift solenoid valve A operates. (When driving in 1st gear.)	Battery voltage
				When shift solenoid valve A does not operate.	0V

Diagnostic Procedure

UCS002LW

1. CHECK SHIFT SOLENOID VALVE A SIGNAL

With CONSULT-II

1. Start engine.
2. Select “A/T” with “DATA MONITOR” mode in CONSULT-II.
3. Drive vehicle and read out the value of “SFT SOL A OUT” and “SFT SOL A MON”.

Monitor item	Condition	Indication
● SFT SOL A OUT ● SFT SOL A MON	When shift solenoid valve A operates. (When driving in 1st gear.)	ON
	When shift solenoid valve A does not operate.	OFF

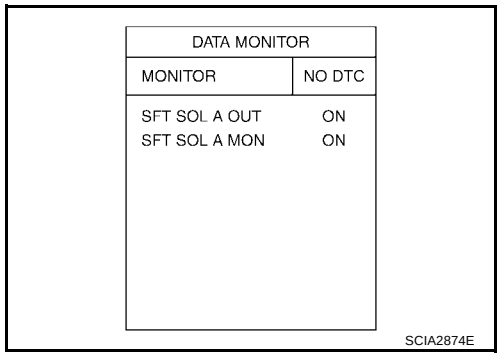

Without CONSULT-II

1. Drive vehicle.
2. Check voltage between TCM connector terminal and ground.

Connector	Terminal (Wire color)	Condition	Voltage (Approx.)
E142	46 (W/G) - Ground	When shift solenoid valve A operates. (When driving in 1st gear.)	Battery voltage
		When shift solenoid valve A does not operate.	0V

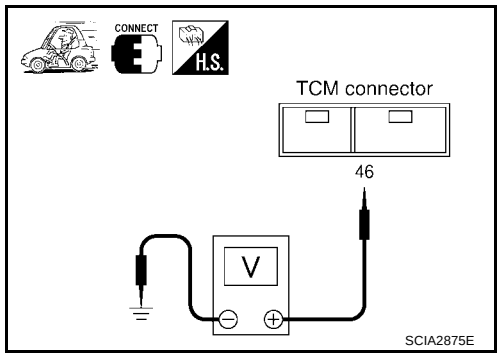

OK or NG

OK >> GO TO 7.
NG >> GO TO 2.

2. CHECK SHIFT SOLENOID VALVE A CIRCUIT

1. Turn ignition switch “OFF”.
2. Disconnect the TCM connector.
3. Check resistance between TCM connector terminal 46 and ground.

Connector	Terminal (Wire color)	Condition	Resistance (Approx.)
E142	46 (W/G) - Ground	Temperature: 20°C (68°F)	11 - 16 Ω

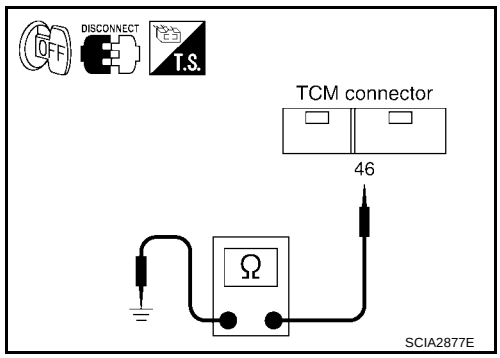

OK or NG

OK >> GO TO 7.
NG >> GO TO 3.

3. CHECK TERMINAL CORD ASSEMBLY WITH SHIFT SOLENOID VALVE A

1. Turn ignition switch “OFF”.
2. Disconnect terminal cord assembly harness connector.
3. Check resistance between terminal 2 and ground.

Connector	Terminal	Condition	Resistance (Approx.)
F30	2 - Ground	Temperature: 20°C (68°F)	11 - 16 Ω

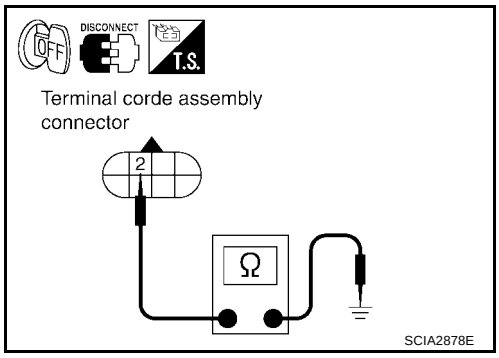

OK or NG

OK >> GO TO 4.
NG >> GO TO 5.

4. CHECK HARNESS BETWEEN TCM AND TERMINAL CORD ASSEMBLY

Check the following.

- Open or short-circuit in the harness between TCM and terminal cord assembly.

OK or NG

OK >> GO TO 7.
NG >> Repair or replace damaged parts.

5. CHECK SHIFT SOLENOID VALVE A

1. Remove side cover. Refer to AT-611, "Side cover" .
2. Disconnect shift solenoid valve A harness connector.
3. Check resistance between terminal 1 and ground.

Connector	Terminal	Condition	Resistance (Approx.)
F67	1 - Ground	Temperature: 20°C (68°F)	11 - 16 Ω

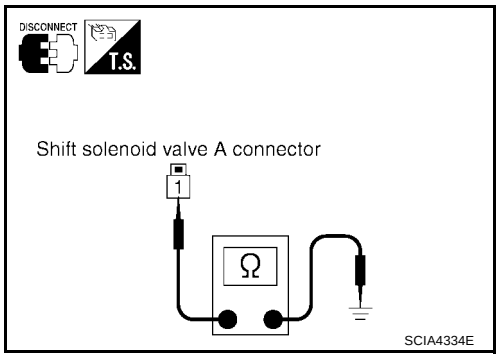

OK or NG

OK >> GO TO 6.
NG >> Replace the control valve assembly. Refer to AT-611, "Control Valve Assembly" .

6. CHECK HARNESS BETWEEN TERMINAL CORD ASSEMBLY AND SHIFT SOLENOID VALVE A

Check the following.

- Open or short-circuit in the harness between terminal cord assembly and shift solenoid valve A.

OK or NG

OK >> GO TO 7.
NG >> Repair or replace transmission wire. Refer to AT-611, "Transmission wire" .

7. CHECK DTC

Perform “DTC Confirmation Procedure”. Refer toAT-519, "DTC Confirmation Procedure" .

OK or NG

OK >> **INSPECTION END**
NG >> GO TO 8.

8. CHECK TCM

1. Check TCM input/output signal. Refer to AT-439, "TCM Input/Output Signal Reference Values" .
2. If NG, recheck TCM pin terminals for damage or loose connection with harness connector.

OK or NG

OK >> **INSPECTION END**
NG >> Repair or replace damaged parts.

Component Inspection

UCS002LX

SHIFT SOLENOID VALVE A

1. Remove side cover. Refer to AT-611, "Side cover" .
2. Disconnect shift solenoid valve A harness connector.
3. Check resistance between terminal 1 and ground.

Connector	Terminal	Condition	Resistance (Approx.)
F67	1 - Ground	Temperature: 20°C (68°F)	11 - 16 Ω

4. If NG, replace the control valve assembly. Refer to AT-611, "Control Valve Assembly" .

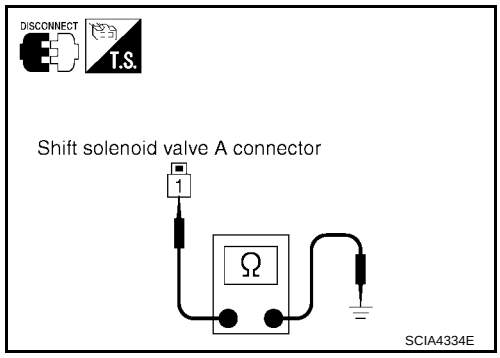

DTC P0755 SHIFT SOLENOID VALVE B

PFP:31940

Description

UCS0013D

- Shift solenoid valves are installed directly in control valve body. The shift solenoid valves operates of ON and OFF by the control signal from TCM. Combinations of 5 shift solenoid valves, A, B, C, D and E, shifts gear positions.
- The shift solenoid valve B is a normally closed, ON-OFF type solenoid.

Gear position	D_1 , L_1	D_2 , L_2	D_3 , L_3	D_4	D_5	Reverse
Shift solenoid valve B	ON (Open)	OFF (Closed)	OFF (Closed)	OFF (Closed)	ON (Open)	OFF (Closed)

On Board Diagnosis Logic

UCS0013E

- This is an OBD-II self-diagnostic item.
- Diagnostic trouble code “SHIFT SOL B” with CONSULT-II or P0755 without CONSULT-II is detected under the following conditions.
  - When normal voltage is not applied to solenoid due to open, short, and so on.
  - When TCM detects as irregular by comparing target value with monitor value.

Possible Cause

UCS0013F

- Harness or connectors
  (The solenoid circuit is open or shorted.)
- Shift solenoid valve B

DTC Confirmation Procedure

UCS0014R

CAUTION:

- **Always drive vehicle at a safe speed.**
- **Be careful not to rev engine into the red zone on the tachometer.**

NOTE:

If “DTC Confirmation Procedure” has been previously performed, always turn ignition switch “OFF” and wait at least 10 seconds before performing the next test.

After the repair, perform the following procedure to confirm the malfunction is eliminated.

WITH CONSULT-II

1. Turn ignition switch “ON”. (Do not start engine.)
2. Select “DATA MONITOR” mode for “A/T” with CONSULT-II.
3. Start engine.
4. Drive vehicle and allow the following conditions.
   SLCT LVR POSI: “D” position
   GEAR: 1st ⇒ 2nd and 4th ⇒ 5th position
5. If DTC is detected, go to AT-526, "Diagnostic Procedure" .

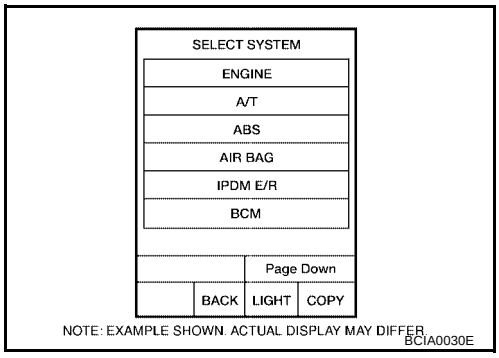

WITH GST

Follow the procedure “With CONSULT-II”.

Wiring Diagram — AT — SSV/B

UCS0013H

AT-SSV/B-01

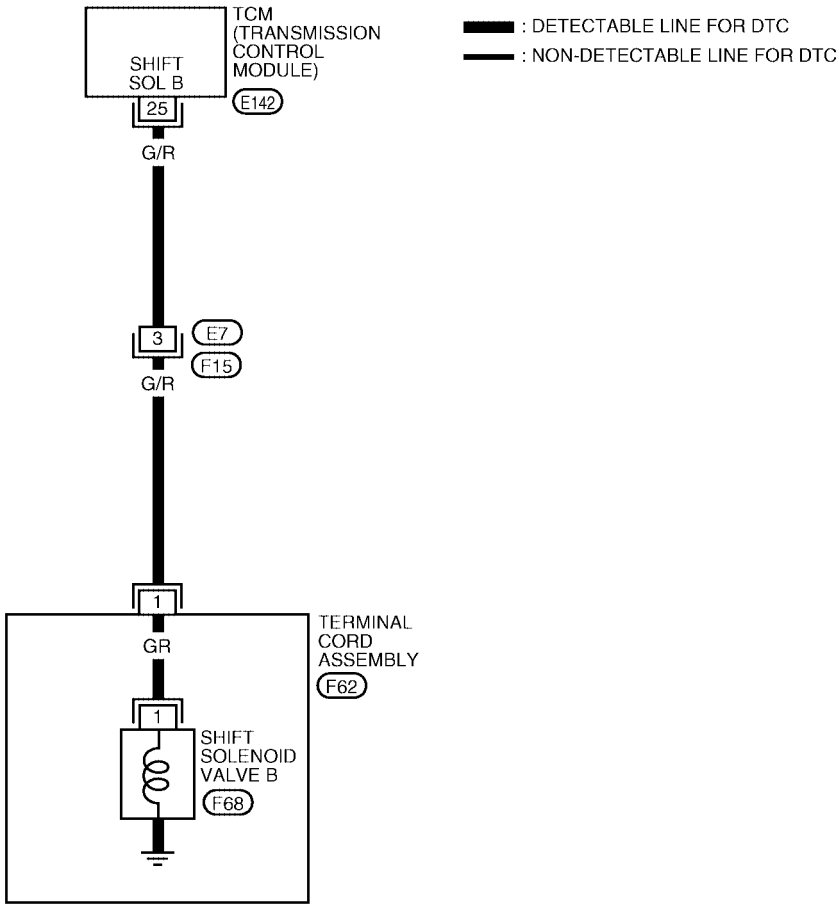

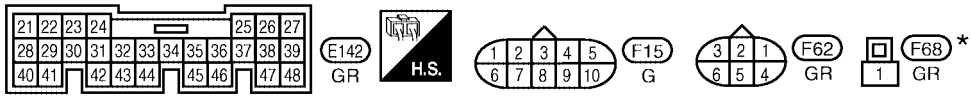

*: THIS CONNECTOR IS NOT SHOWN IN "HARNESS LAYOUT" OF PG SECTION.

BCWA0209E

TCM terminal and data are reference value. Measured between each terminal and ground.

Terminal	Wire color	Item	Condition		Data (Approx.)
25	G/R	Shift solenoid valve B		When shift solenoid valve B operates. (When driving in 1st or 5th gear.)	Battery voltage
				When shift solenoid valve B does not operate.	0V

Diagnostic Procedure

UCS002LY

1. CHECK SHIFT SOLENOID VALVE B SIGNAL

With CONSULT-II

1. Start engine.
2. Select “A/T” with “DATA MONITOR” mode in CONSULT-II.
3. Drive vehicle and read out the value of “SFT SOL B OUT” and “SFT SOL B MON”.

Monitor item	Condition	Indication
● SFT SOL B OUT ● SFT SOL B MON	When shift solenoid valve B operates. (When driving in 1st or 5th gear.)	ON
	When shift solenoid valve B does not operate.	OFF

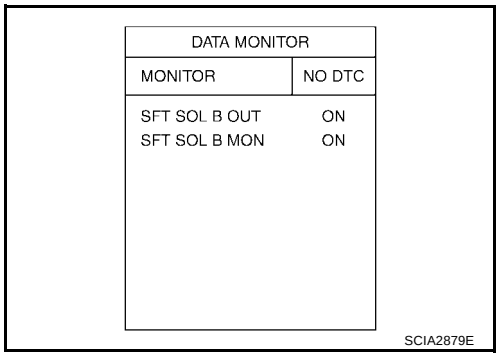

Without CONSULT-II

1. Drive vehicle.
2. Check voltage between TCM connector terminal and ground.

Connector	Terminal (Wire color)	Condition	Voltage (Approx.)
E142	25 (G/R) - Ground	When shift solenoid valve B operates. (When driving in 1st or 5th gear.)	Battery voltage
		When shift solenoid valve B does not operate.	0V

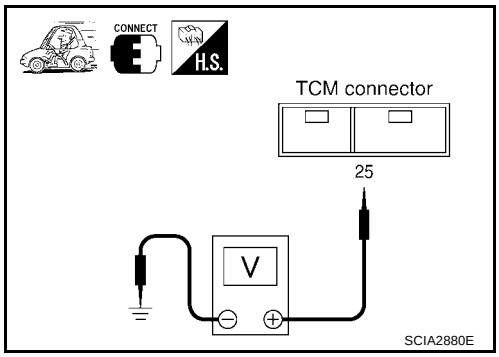

OK or NG

OK >> GO TO 7.
NG >> GO TO 2.

2. CHECK SHIFT SOLENOID VALVE B CIRCUIT

1. Turn ignition switch “OFF”.
2. Disconnect the TCM connector.
3. Check resistance between TCM connector terminal 25 and ground.

Connector	Terminal (Wire color)	Condition	Resistance (Approx.)
E142	25 (G/R) - Ground	Temperature: 20°C (68°F)	11 - 16 Ω

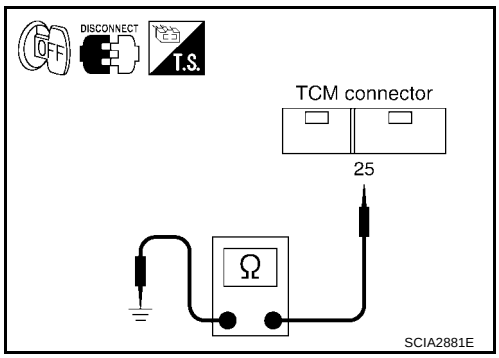

OK or NG

OK >> GO TO 7.
NG >> GO TO 3.

3. CHECK TERMINAL CORD ASSEMBLY WITH SHIFT SOLENOID VALVE B

1. Turn ignition switch “OFF”.
2. Disconnect terminal cord assembly harness connector.
3. Check resistance between terminal 1 and ground.

Connector	Terminal	Condition	Resistance (Approx.)
F62	1 - Ground	Temperature: 20°C (68°F)	11 - 16 Ω

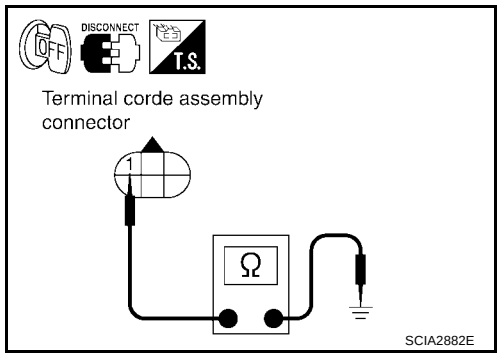

OK or NG

OK >> GO TO 4.
NG >> GO TO 5.

4. CHECK HARNESS BETWEEN TCM AND TERMINAL CORD ASSEMBLY

Check the following.

- Open or short-circuit in the harness between TCM and terminal cord assembly.

OK or NG

OK >> GO TO 7.
NG >> Repair or replace damaged parts.

5. CHECK SHIFT SOLENOID VALVE B

1. Remove side cover. Refer to AT-611, "Side cover" .
2. Disconnect shift solenoid valve B harness connector.
3. Check resistance between terminal 1 and ground.

Connector	Terminal	Condition	Resistance (Approx.)
F68	1 - Ground	Temperature: 20°C (68°F)	11 - 16 Ω

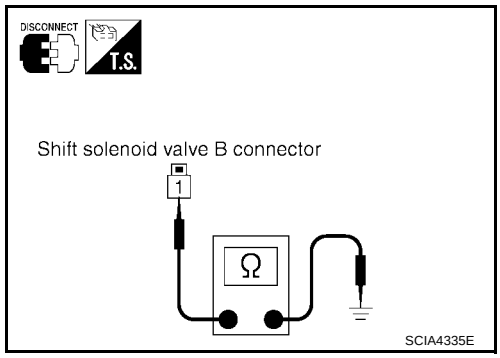

OK or NG

OK >> GO TO 6.
NG >> Replace the control valve assembly. Refer to AT-611, "Control Valve Assembly" .

6. CHECK HARNESS BETWEEN TERMINAL CORD ASSEMBLY AND SHIFT SOLENOID VALVE B

Check the following.

- Open or short-circuit in the harness between terminal cord assembly and shift solenoid valve B.

OK or NG

OK >> GO TO 7.
NG >> Repair or replace transmission wire. Refer to AT-611, "Transmission wire" .

7. CHECK DTC

Perform “DTC Confirmation Procedure”. Refer to AT-524, "DTC Confirmation Procedure" .

OK or NG

OK >> **INSPECTION END**
NG >> GO TO 8.

8. CHECK TCM

1. Check TCM input/output signal. Refer to AT-439, "TCM Input/Output Signal Reference Values" .
2. If NG, recheck TCM pin terminals for damage or loose connection with harness connector.

OK or NG

OK >> **INSPECTION END**
NG >> Repair or replace damaged parts.

Component Inspection

UCS002LZ

SHIFT SOLENOID VALVE B

1. Remove side cover. Refer to AT-611, "Side cover" .
2. Disconnect shift solenoid valve B harness connector.
3. Check resistance between terminal 1 and ground.

Connector	Terminal	Condition	Resistance (Approx.)
F68	1 - Ground	Temperature: 20°C (68°F)	11 - 16 Ω

4. If NG, replace the control valve assembly. Refer to AT-611, "Control Valve Assembly" .

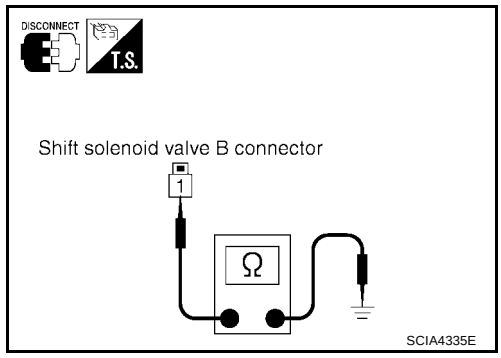

DTC P0760 SHIFT SOLENOID VALVE C

PFP:31940

Description

UCS0013J

- Shift solenoid valves are installed directly in control valve body. The shift solenoid valves operates of ON and OFF by the control signal from TCM. Combinations of 5 shift solenoid valves, A, B, C, D and E, shifts gear positions.
- The shift solenoid valve C is a normally closed, ON-OFF type solenoid.

Gear position	D_1 , L_1	D_2 , L_2	D_3 , L_3	D_4	D_5	Reverse
Shift solenoid valve C	ON (Open)	ON (Open)	ON (Open)	OFF (Closed)	OFF (Closed)	ON (Open)

On Board Diagnosis Logic

UCS0013K

- This is an OBD-II self-diagnostic item.
- Diagnostic trouble code “SHIFT SOL C” with CONSULT-II or P0760 without CONSULT-II is detected under the following conditions.
  - When normal voltage is not applied to solenoid due to open, short, and so on.
  - When TCM detects as irregular by comparing target value with monitor value.

Possible Cause

UCS0013L

- Harness or connectors
  (The solenoid circuit is open or shorted.)
- Shift solenoid valve C

DTC Confirmation Procedure

UCS0014S

CAUTION:

- **Always drive vehicle at a safe speed.**
- **Be careful not to rev engine into the red zone on the tachometer.**

NOTE:

If “DTC Confirmation Procedure” has been previously performed, always turn ignition switch “OFF” and wait at least 10 seconds before performing the next test.

After the repair, perform the following procedure to confirm the malfunction is eliminated.

WITH CONSULT-II

1. Turn ignition switch “ON”. (Do not start engine.)
2. Select “DATA MONITOR” mode for “A/T” with CONSULT-II.
3. Start engine.
4. Drive vehicle and allow the following conditions.
   SLCT LVR POSI: “D” position
   GEAR: 3rd ⇒ 4th position
5. If DTC is detected, go to AT-531, "Diagnostic Procedure" .

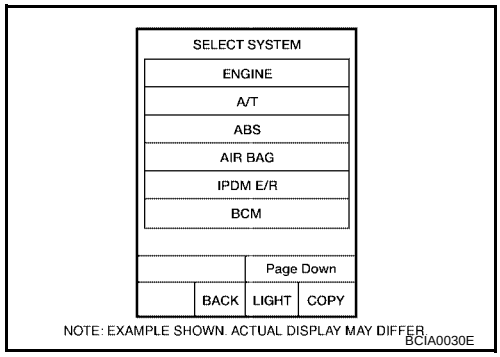

WITH GST

Follow the procedure “With CONSULT-II”.

Wiring Diagram — AT — SSV/C

UCS0013N

AT-SSV/C-01

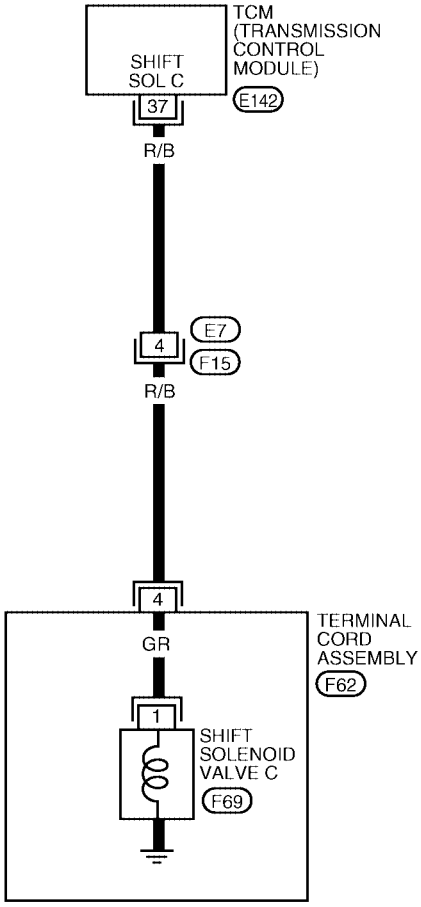

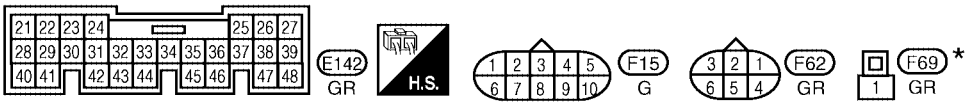

*: THIS CONNECTOR IS NOT SHOWN IN "HARNESS LAYOUT" OF PG SECTION.

BCWA0210E

TCM terminal and data are reference value. Measured between each terminal and ground.

Terminal	Wire color	Item	Condition		Data (Approx.)
37	R/B	Shift solenoid valve C		When shift solenoid valve C operates. (When driving in 1st, 2nd, 3rd or reverse gear.)	Battery voltage
				When shift solenoid valve C does not operate.	0V

Diagnostic Procedure

UCS002M0

1. CHECK SHIFT SOLENOID VALVE C SIGNAL

With CONSULT-II

1. Start engine.
2. Select “A/T” with “DATA MONITOR” mode in CONSULT-II.
3. Drive vehicle and read out the value of “SFT SOL C OUT” and “SFT SOL C MON”.

Monitor item	Condition	Indication
● SFT SOL C OUT ● SFT SOL C MON	When shift solenoid valve C operates. (When driving in 1st, 2nd, 3rd or reverse gear.)	ON
	When shift solenoid valve C does not operate.	OFF

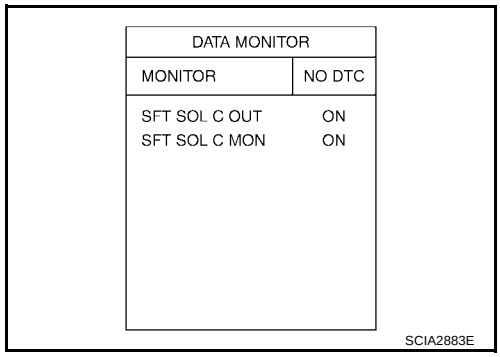

Without CONSULT-II

1. Drive vehicle.
2. Check voltage between TCM connector terminal and ground.

Connector	Terminal (Wire color)	Condition	Voltage (Approx.)
E142	37 (R/B) - Ground	When shift solenoid valve C operates. (When driving in 1st, 2nd, 3rd or reverse gear.)	Battery voltage
		When shift solenoid valve C does not operate.	0V

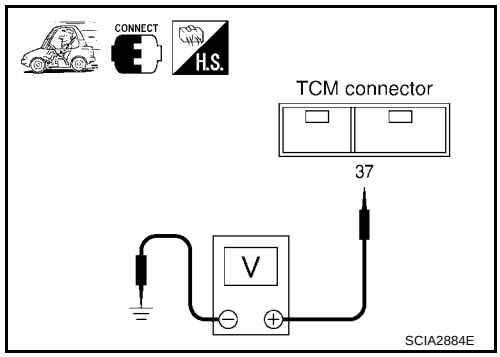

OK or NG

OK >> GO TO 7.
NG >> GO TO 2.

2. CHECK SHIFT SOLENOID VALVE C CIRCUIT

1. Turn ignition switch “OFF”.
2. Disconnect the TCM connector.
3. Check resistance between TCM connector terminal 37 and ground.

Connector	Terminal (Wire color)	Condition	Resistance (Approx.)
E142	37 (R/B) - Ground	Temperature: 20°C (68°F)	11 - 16 Ω

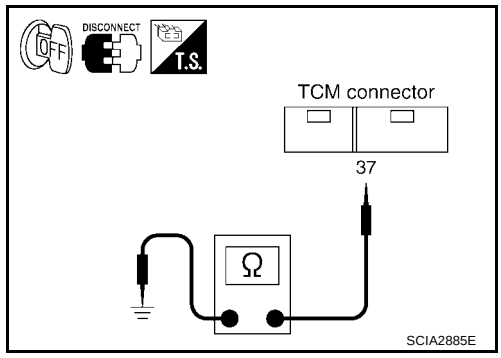

OK or NG

OK >> GO TO 7.
NG >> GO TO 3.

3. CHECK TERMINAL CORD ASSEMBLY WITH SHIFT SOLENOID VALVE C

1. Turn ignition switch “OFF”.
2. Disconnect terminal cord assembly harness connector.
3. Check resistance between terminal 4 and ground.

Connector	Terminal	Condition	Resistance (Approx.)
F62	4 - Ground	Temperature: 20°C (68°F)	11 - 16 Ω

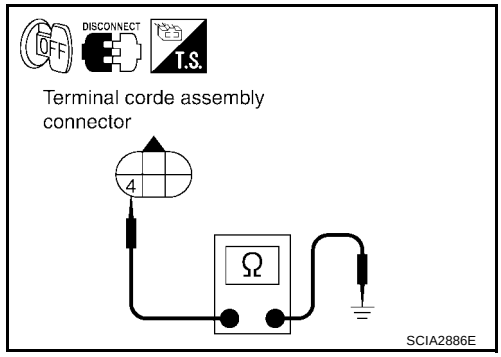

OK or NG

OK >> GO TO 4.
NG >> GO TO 5.

4. CHECK HARNESS BETWEEN TCM AND TERMINAL CORD ASSEMBLY

Check the following.

- Open or short-circuit in the harness between TCM and terminal cord assembly.

OK or NG

OK >> GO TO 7.
NG >> Repair or replace damaged parts.

5. CHECK SHIFT SOLENOID VALVE C

1. Remove side cover. Refer to AT-611, "Side cover" .
2. Disconnect shift solenoid valve C harness connector.
3. Check resistance between terminal 1 and ground.

Connector	Terminal	Condition	Resistance (Approx.)
F69	1 - Ground	Temperature: 20°C (68°F)	11 - 16 Ω

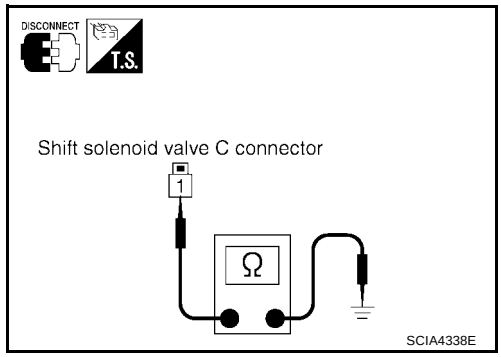

OK or NG

OK >> GO TO 6.
NG >> Replace the control valve assembly. Refer to AT-611, "Control Valve Assembly" .

6. CHECK HARNESS BETWEEN TERMINAL CORD ASSEMBLY AND SHIFT SOLENOID VALVE C

Check the following.

- Open or short-circuit in the harness between terminal cord assembly and shift solenoid valve C.

OK or NG

OK >> GO TO 7.
NG >> Repair or replace transmission wire.

7. CHECK DTC

Perform “DTC Confirmation Procedure”. Refer to AT-529, "DTC Confirmation Procedure" .

OK or NG

OK >> **INSPECTION END**
NG >> GO TO 8.

8. CHECK TCM

1. Check TCM input/output signal. Refer to AT-439, "TCM Input/Output Signal Reference Values" .
2. If NG, recheck TCM pin terminals for damage or loose connection with harness connector.

OK or NG

OK >> **INSPECTION END**
NG >> Repair or replace damaged parts.

Component Inspection

UCS002M1

SHIFT SOLENOID VALVE C

1. Remove side cover. Refer to AT-611, "Side cover" .
2. Disconnect shift solenoid valve C harness connector.
3. Check resistance between terminal 1 and ground.

Connector	Terminal	Condition	Resistance (Approx.)
F69	1 - Ground	Temperature: 20°C (68°F)	11 - 16 Ω

4. If NG, replace the control valve assembly. Refer to AT-611, "Control Valve Assembly" .

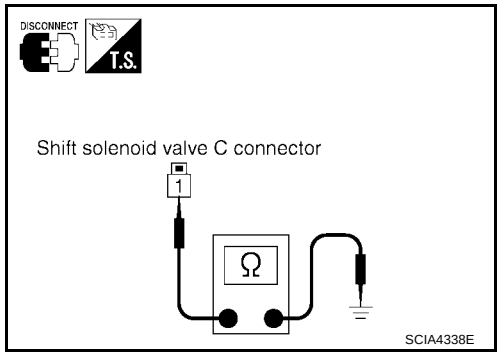

DTC P0762 SHIFT SOLENOID VALVE C STUCK ON

PFP:31940

Description

UCS00141

- This malfunction will not be detected while the O/D OFF indicator lamp is indicating another self-diagnosis malfunction.
- This is not caused by electrical malfunction (circuits open or shorted) but by mechanical malfunction such as control valve sticking, improper solenoid valve operation, etc.
- Shift solenoid valves are installed directly in control valve body. The shift solenoid valves operates of ON and OFF by the control signal from TCM. Combinations of 5 shift solenoid valves, A, B, C, D and E, shifts gear positions.
- The shift solenoid valve C is a normally closed, ON-OFF type solenoid.

Gear position	D_1 , L_1	D_2 , L_2	D_3 , L_3	D_4	D_5	Reverse
Shift solenoid valve C	ON (Open)	ON (Open)	ON (Open)	OFF (Closed)	OFF (Closed)	ON (Open)

On Board Diagnosis Logic

UCS00142

- This is an OBD-II self-diagnostic item.
- Diagnostic trouble code “SFT SOL C STUCK ON” with CONSULT-II or P0762 without CONSULT-II is detected when condition of shift solenoid valve C is different from monitor value, and relation between gear position and actual gear ratio is irregular.

Possible Cause

UCS00143

- Shift solenoid valve C
  (On stick.)
- Hydraulic control circuit

DTC Confirmation Procedure

UCS0014V

CAUTION:

- **Always drive vehicle at a safe speed.**
- **Be careful not to rev engine into the red zone on the tachometer.**

NOTE:
If “DTC Confirmation Procedure” has been previously performed, always turn ignition switch “OFF” and wait at least 10 seconds before performing the next test.
After the repair, perform the following procedure to confirm the malfunction is eliminated.

WITH CONSULT-II

1. Turn ignition switch “ON”. (Do not start engine.)
2. Select “DATA MONITOR” mode for “A/T” with CONSULT-II.
3. Start engine.
4. Drive vehicle and allow the following conditions.
   SLCT LVR POSI: “D” position
   GEAR: 3rd ⇒ 4th position
   ACCELE ANGLE: More than 10 %
5. If DTC is detected, go to AT-536, "Diagnostic Procedure" .

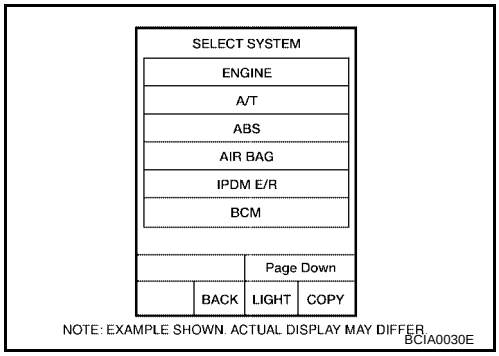

WITH GST

Follow the procedure “With CONSULT-II”.

Wiring Diagram — AT — SSV/CS

UCS00145

AT-SSV/CS-01

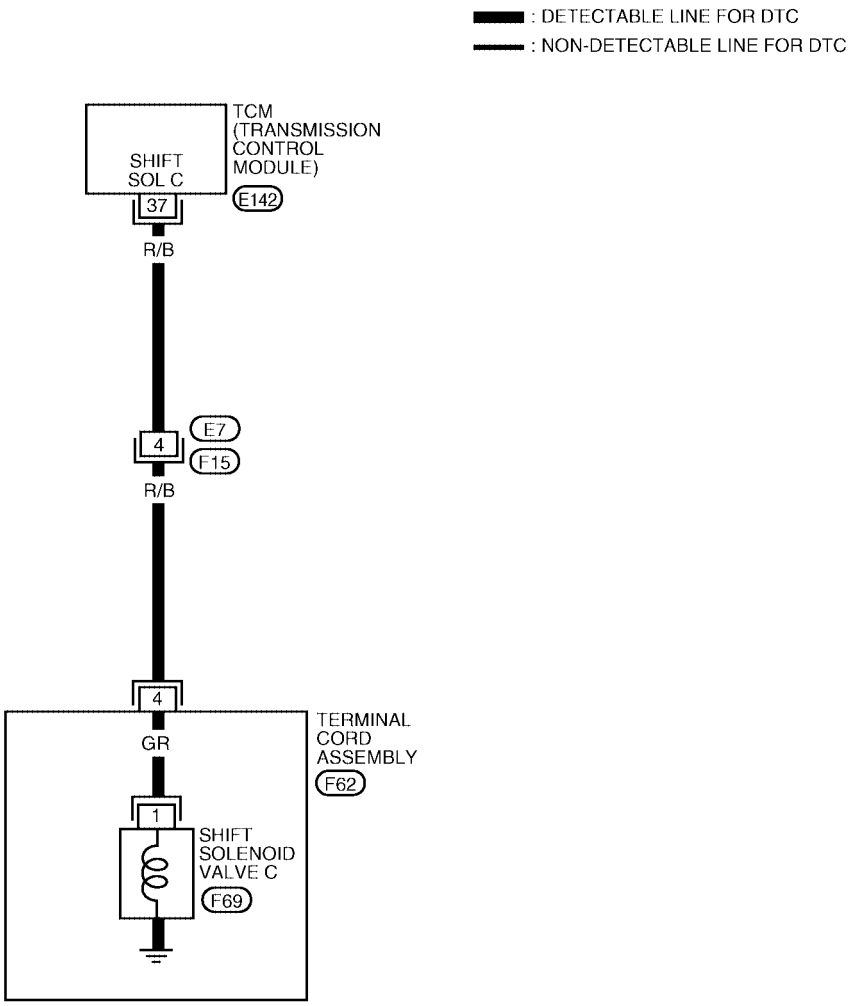

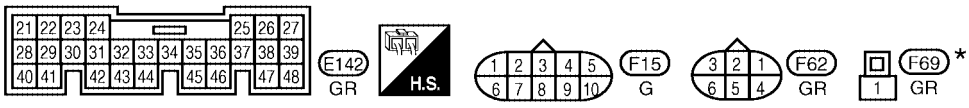

*: THIS CONNECTOR IS NOT SHOWN IN "HARNESS LAYOUT" OF PG SECTION.

BCWA0211E

TCM terminal and data are reference value. Measured between each terminal and ground.

Terminal	Wire color	Item	Condition		Data (Approx.)
37	R/B	Shift solenoid valve C		When shift solenoid valve C operates. (When driving in 1st, 2nd, 3rd or reverse gear.)	Battery voltage
				When shift solenoid valve C does not operate.	0V

Diagnostic Procedure

UCS002M2

1. CHECK SHIFT SOLENOID VALVE C SIGNAL

With CONSULT-II

1. Start engine.
2. Select “A/T” with “DATA MONITOR” mode in CONSULT-II.
3. Drive vehicle and read out the value of “SFT SOL C OUT” and “SFT SOL C MON”.

Monitor item	Condition	Indication
● SFT SOL C OUT ● SFT SOL C MON	When shift solenoid valve C operates. (When driving in 1st, 2nd, 3rd or reverse gear.)	ON
	When shift solenoid valve C does not operate.	OFF

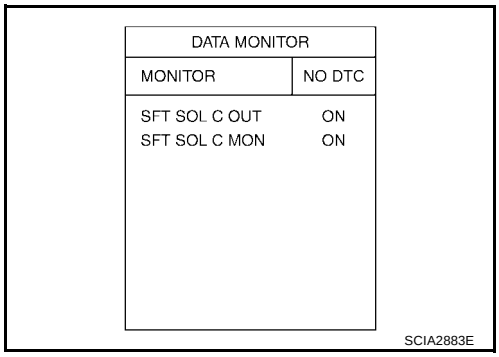

Without CONSULT-II

1. Drive vehicle.
2. Check voltage between TCM connector terminal and ground.

Connector	Terminal (Wire color)	Condition	Voltage (Approx.)
E142	37 (R/B) - Ground	When shift solenoid valve C operates. (When driving in 1st, 2nd, 3rd or reverse gear.)	Battery voltage
		When shift solenoid valve C does not operate.	0V

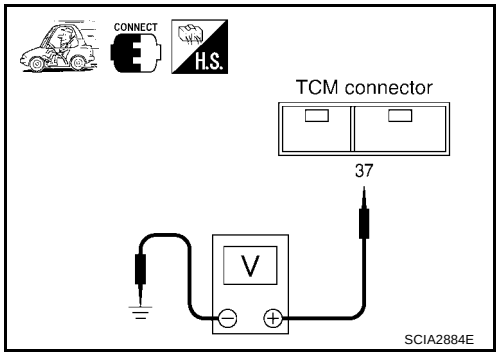

OK or NG

OK >> GO TO 7.
NG >> GO TO 2.

2. CHECK SHIFT SOLENOID VALVE C CIRCUIT

1. Turn ignition switch “OFF”.
2. Disconnect the TCM connector.
3. Check resistance between TCM connector terminal 37 and ground.

Connector	Terminal (Wire color)	Condition	Resistance (Approx.)
E142	37 (R/B) - Ground	Temperature: 20°C (68°F)	11 - 16 Ω

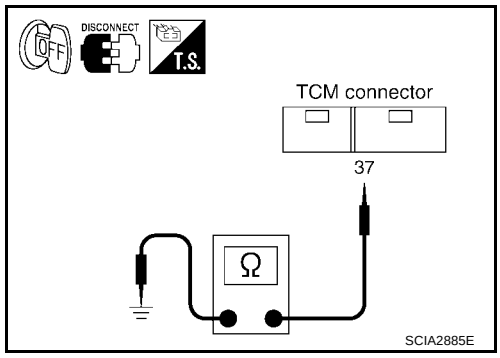

OK or NG

OK >> GO TO 7.
NG >> GO TO 3.

3. CHECK TERMINAL CORD ASSEMBLY WITH SHIFT SOLENOID VALVE C

1. Turn ignition switch “OFF”.
2. Disconnect terminal cord assembly harness connector.
3. Check resistance between terminal 4 and ground.

Connector	Terminal	Condition	Resistance (Approx.)
F62	4 - Ground	Temperature: 20°C (68°F)	11 - 16 Ω

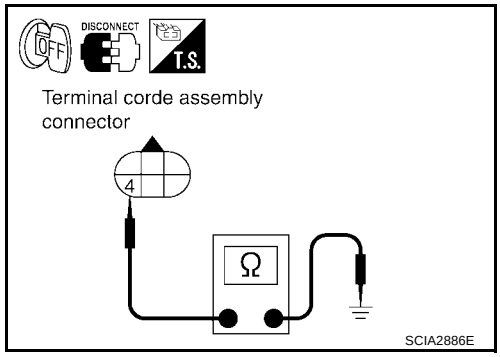

OK or NG

OK >> GO TO 4.
NG >> GO TO 5.

4. CHECK HARNESS BETWEEN TCM AND TERMINAL CORD ASSEMBLY

Check the following.

- Open or short-circuit in the harness between TCM and terminal cord assembly.

OK or NG

OK >> GO TO 7.
NG >> Repair or replace damaged parts.

5. CHECK SHIFT SOLENOID VALVE C

1. Remove side cover. Refer to AT-611, "Side cover" .
2. Disconnect shift solenoid valve C harness connector.
3. Check resistance between terminal 1 and ground.

Connector	Terminal	Condition	Resistance (Approx.)
F69	1 - Ground	Temperature: 20°C (68°F)	11 - 16 Ω

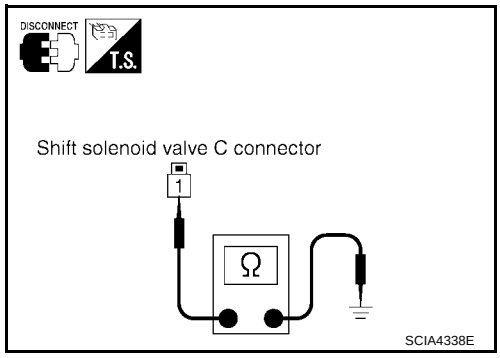

OK or NG

OK >> GO TO 6.
NG >> Replace the control valve assembly. Refer to AT-611, "Control Valve Assembly" .

6. CHECK HARNESS BETWEEN TERMINAL CORD ASSEMBLY AND SHIFT SOLENOID VALVE C

Check the following.

- Open or short-circuit in the harness between terminal cord assembly and shift solenoid valve C.

OK or NG

OK >> GO TO 7.
NG >> Repair or replace transmission wire.

7. CHECK DTC

Perform “DTC Confirmation Procedure”. Refer to AT-534, "DTC Confirmation Procedure" .

OK or NG

OK >> **INSPECTION END**
NG >> GO TO 8.

8. CHECK TCM

1. Check TCM input/output signal. Refer to AT-439, "TCM Input/Output Signal Reference Values" .
2. If NG, recheck TCM pin terminals for damage or loose connection with harness connector.

OK or NG

OK >> **INSPECTION END**
NG >> Repair or replace damaged parts.

Component Inspection

UCS002M3

SHIFT SOLENOID VALVE C

1. Remove side cover. Refer to AT-611, "Side cover" .
2. Disconnect shift solenoid valve C harness connector.
3. Check resistance between terminal 1 and ground.

Connector	Terminal	Condition	Resistance (Approx.)
F69	1 - Ground	Temperature: 20°C (68°F)	11 - 16 Ω

4. If NG, replace the control valve assembly. Refer to AT-611, "Control Valve Assembly" .

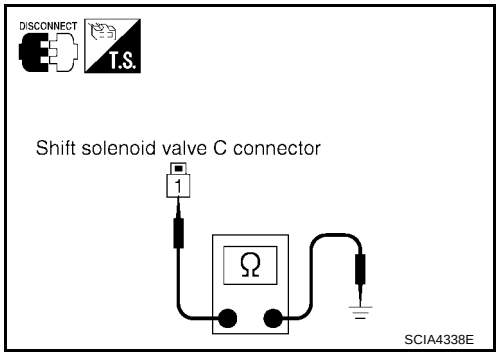

DTC P0765 SHIFT SOLENOID VALVE D

PFP:31940

Description

UCS0013P

- Shift solenoid valves are installed directly in control valve body. The shift solenoid valves operates of ON and OFF by the control signal from TCM. Combinations of 5 shift solenoid valves, A, B, C, D and E, shifts gear positions.
- The shift solenoid valve D is a normally open, ON-OFF type solenoid.

Gear position	D_1 , L_1	D_2 , L_2	D_3 , L_3	D_4	D_5	Reverse
Shift solenoid valve D	OFF (Open)	OFF (Open)	ON (Closed)	ON (Closed)	ON (Closed)	OFF (Open)

On Board Diagnosis Logic

UCS0013Q

- This is an OBD-II self-diagnostic item.
- Diagnostic trouble code “SHIFT SOL D” with CONSULT-II or P0765 without CONSULT-II is detected under the following conditions.
  - When normal voltage is not applied to solenoid due to open, short, and so on.
  - When TCM detects as irregular by comparing target value with monitor value.

Possible Cause

UCS0013R

- Harness or connectors
  (The solenoid circuit is open or shorted.)
- Shift solenoid valve D

DTC Confirmation Procedure

UCS0014T

CAUTION:

- **Always drive vehicle at a safe speed.**
- **Be careful not to rev engine into the red zone on the tachometer.**

NOTE:
If “DTC Confirmation Procedure” has been previously performed, always turn ignition switch “OFF” and wait at least 10 seconds before performing the next test.
After the repair, perform the following procedure to confirm the malfunction is eliminated.

WITH CONSULT-II

1. Turn ignition switch “ON”. (Do not start engine.)
2. Select “DATA MONITOR” mode for “A/T” with CONSULT-II.
3. Start engine.
4. Drive vehicle and allow the following conditions.
   SLCT LVR POSI: “D” position
   GEAR: 2nd ⇒ 3rd position
5. If DTC is detected, go to AT-541, "Diagnostic Procedure" .

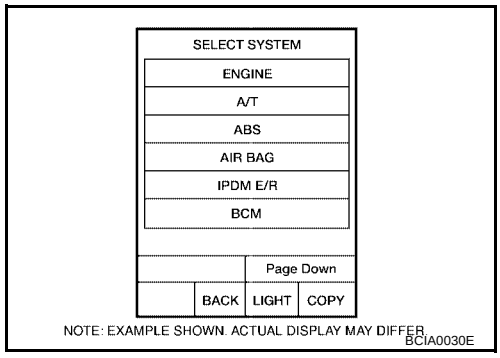

WITH GST

Follow the procedure “With CONSULT-II”.

Wiring Diagram — AT — SSV/D

UCS0013T

AT-SSV/D-01

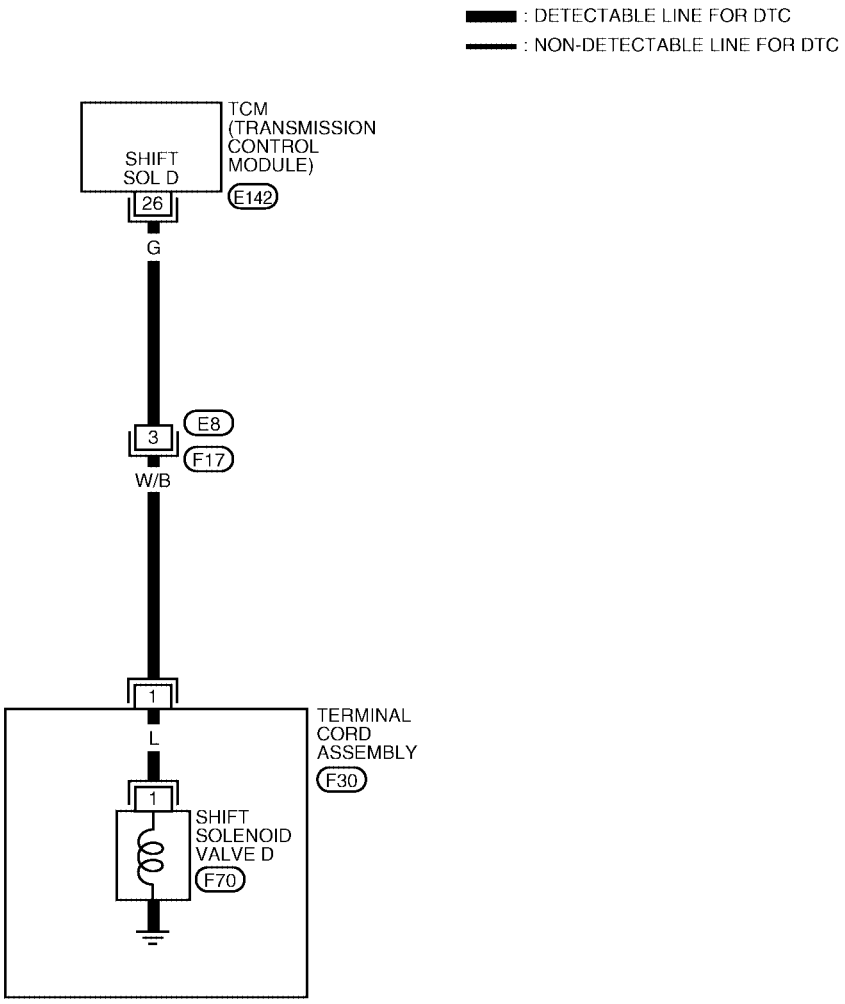

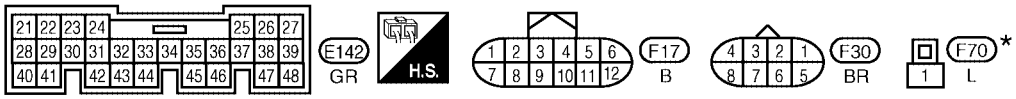

★: THIS CONNECTOR IS NOT SHOWN IN "HARNESS LAYOUT" OF PG SECTION.

BCWA0212E

TCM terminal and data are reference value. Measured between each terminal and ground.

Terminal	Wire color	Item	Condition		Data (Approx.)
26	G	Shift solenoid valve D		When shift solenoid valve D operates. (When driving in 3rd, 4th or 5th gear.)	Battery voltage
				When shift solenoid valve D does not operate.	0V

Diagnostic Procedure

UCS002M4

1. CHECK SHIFT SOLENOID VALVE D SIGNAL

With CONSULT-II

1. Start engine.
2. Select “A/T” with “DATA MONITOR” mode in CONSULT-II.
3. Drive vehicle and read out the value of “SFT SOL D OUT” and “SFT SOL D MON”.

Monitor item	Condition	Indication
● SFT SOL D OUT ● SFT SOL D MON	When shift solenoid valve D operates. (When driving in 3rd, 4th or 5th gear.)	ON
	When shift solenoid valve D does not operate.	OFF

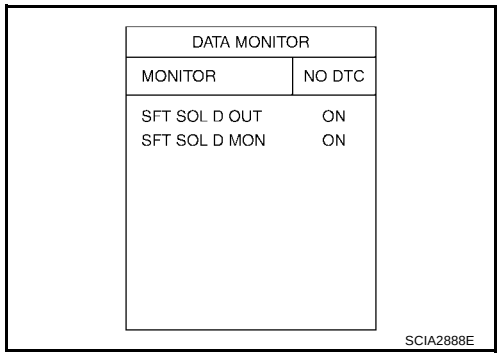

Without CONSULT-II

1. Drive vehicle.
2. Check voltage between TCM connector terminal and ground.

Connector	Terminal (Wire color)	Condition	Voltage (Approx.)
E142	26 (G) - Ground	When shift solenoid valve D operates. (When driving in 3rd, 4th or 5th gear.)	Battery voltage
		When shift solenoid valve D does not operate.	0V

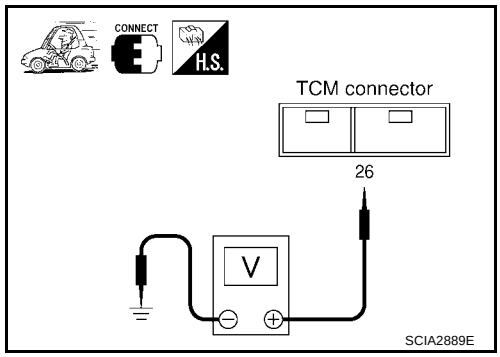

OK or NG

OK >> GO TO 7.
NG >> GO TO 2.

2. CHECK SHIFT SOLENOID VALVE D CIRCUIT

1. Turn ignition switch “OFF”.
2. Disconnect the TCM connector.
3. Check resistance between TCM connector terminal 26 and ground.

Connector	Terminal (Wire color)	Condition	Resistance (Approx.)
E142	26 (G) - Ground	Temperature: 20°C (68°F)	11 - 16 Ω

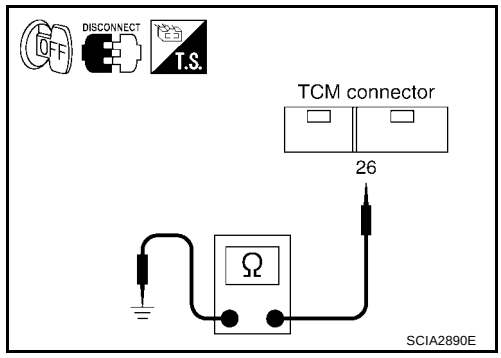

OK or NG

OK >> GO TO 7.
NG >> GO TO 3.

3. CHECK TERMINAL CORD ASSEMBLY WITH SHIFT SOLENOID VALVE D

1. Turn ignition switch “OFF”.
2. Disconnect terminal cord assembly harness connector.
3. Check resistance between terminal 1 and ground.

Connector	Terminal	Condition	Resistance (Approx.)
F30	1 - Ground	Temperature: 20°C (68°F)	11 - 16 Ω

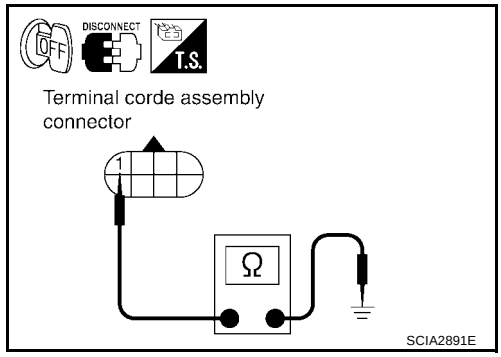

OK or NG

OK >> GO TO 4.
NG >> GO TO 5.

4. CHECK HARNESS BETWEEN TCM AND TERMINAL CORD ASSEMBLY

Check the following.

- Open or short-circuit in the harness between TCM and terminal cord assembly.

OK or NG

OK >> GO TO 7.
NG >> Repair or replace damaged parts.

5. CHECK SHIFT SOLENOID VALVE D

1. Remove side cover. Refer to AT-611, "Side cover" .
2. Disconnect shift solenoid valve D harness connector.
3. Check resistance between terminal 1 and ground.

Connector	Terminal	Condition	Resistance (Approx.)
F70	1 - Ground	Temperature: 20°C (68°F)	11 - 16 Ω

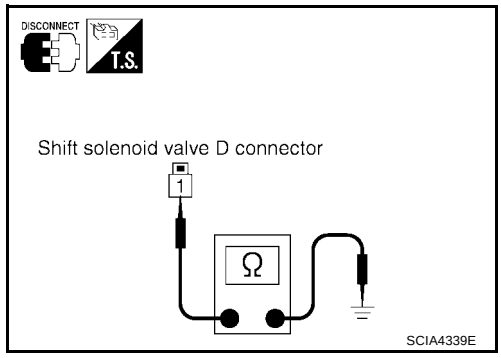

OK or NG

OK >> GO TO 6.
NG >> Replace the control valve assembly. Refer to AT-611, "Control Valve Assembly" .

6. CHECK HARNESS BETWEEN TERMINAL CORD ASSEMBLY AND SHIFT SOLENOID VALVE D

Check the following.

- Open or short-circuit in the harness between terminal cord assembly and shift solenoid valve D.

OK or NG

OK >> GO TO 7.
NG >> Repair or replace transmission wire. Refer to AT-611, "Transmission wire" .

7. CHECK DTC

Perform “DTC Confirmation Procedure”. Refer to AT-539, "DTC Confirmation Procedure" .

OK or NG

OK >> **INSPECTION END**
NG >> GO TO 8.

8. CHECK TCM

1. Check TCM input/output signal. Refer to AT-439, "TCM Input/Output Signal Reference Values" .
2. If NG, recheck TCM pin terminals for damage or loose connection with harness connector.

OK or NG

OK >> **INSPECTION END**
NG >> Repair or replace damaged parts.

Component Inspection

UCS002M5

SHIFT SOLENOID VALVE D

1. Remove side cover. Refer to AT-611, "Side cover" .
2. Disconnect shift solenoid valve D harness connector.
3. Check resistance between terminal 1 and ground.

Connector	Terminal	Condition	Resistance (Approx.)
F70	1 - Ground	Temperature: 20°C (68°F)	11 - 16 Ω

4. If NG, replace the control valve assembly. Refer to AT-611, "Control Valve Assembly" .

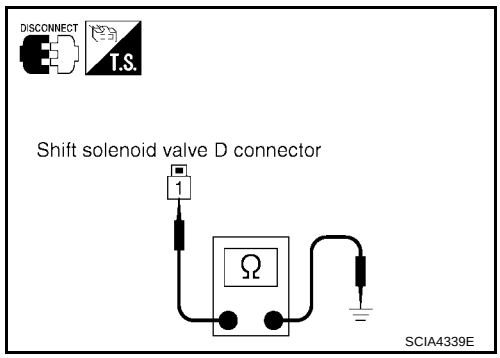

DTC P0770 SHIFT SOLENOID VALVE E

PFP:31940

Description

UCS00137

- Shift solenoid valves are installed directly in control valve body. The shift solenoid valves operates of ON and OFF by the control signal from TCM. Combinations of 5 shift solenoid valves, A, B, C, D and E, shifts gear positions.
- The shift solenoid valve E is a normally closed, ON-OFF type solenoid.

Gear position	D_1 , L_1	D_2 , L_2	D_3 , L_3	D_4	D_5	Reverse
Shift solenoid valve E	OFF (Closed)	OFF (Closed)	OFF (Closed)	OFF (Closed)	OFF (Closed)	ON (Open)

NOTE:
The condition of shift solenoid valve E is ON (Open) with shifting $D_2 \Leftrightarrow D_3$ ($L_2 \Leftrightarrow L_3$) and $D_3 \Leftrightarrow D_4$.

On Board Diagnosis Logic

UCS00138

- This is an OBD-II self-diagnostic item.
- Diagnostic trouble code “SHIFT SOL E” with CONSULT-II or P0770 without CONSULT-II is detected under the following conditions.
  - When normal voltage is not applied to solenoid due to open, short, and so on.
  - When TCM detects as irregular by comparing target value with monitor value.

Possible Cause

UCS00139

- Harness or connectors
  (The solenoid circuit is open or shorted.)
- Shift solenoid valve E

DTC Confirmation Procedure

UCS0014U

CAUTION:
- **Always drive vehicle at a safe speed.**
- **Be careful not to rev engine into the red zone on the tachometer.**

NOTE:
If “DTC Confirmation Procedure” has been previously performed, always turn ignition switch “OFF” and wait at least 10 seconds before performing the next test.
After the repair, perform the following procedure to confirm the malfunction is eliminated.

WITH CONSULT-II

1. Turn ignition switch “ON”. (Do not start engine.)
2. Select “DATA MONITOR” mode for “A/T” with CONSULT-II.
3. Start engine.
4. Move selector lever between “N” and “R”.
   SLCT LVR POSI: “N” ⇔ “R” position
5. If DTC is detected, go to AT-546, "Diagnostic Procedure" .

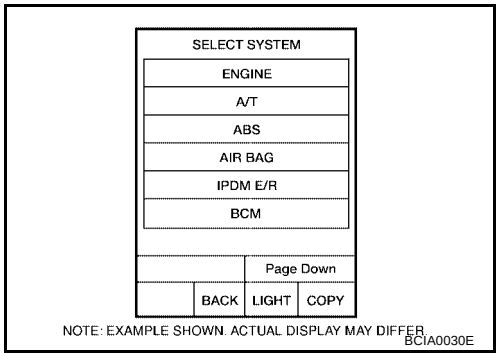

WITH GST

Follow the procedure “With CONSULT-II”.

Wiring Diagram — AT — SSV/E

UCS0013B

AT-SSV/E-01

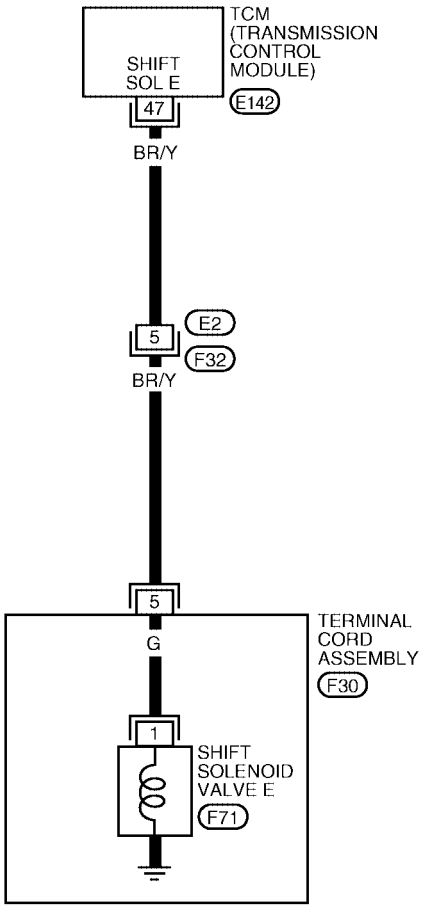

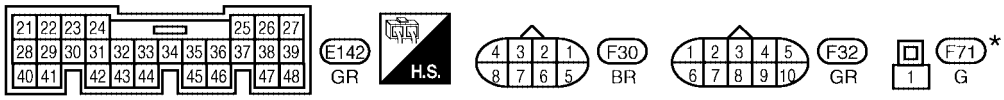

*: THIS CONNECTOR IS NOT SHOWN IN "HARNESS LAYOUT" OF PG SECTION.

BCWA0213E

TCM terminal and data are reference value. Measured between each terminal and ground.

Terminal	Wire color	Item	Condition		Data (Approx.)
47	BR/Y	Shift solenoid valve E		When shift solenoid valve E operates. (When driving in reverse gear.)	Battery voltage
				When shift solenoid valve E does not operate.	0V

Diagnostic Procedure

UCS002M6

1. CHECK SHIFT SOLENOID VALVE E SIGNAL

With CONSULT-II

1. Start engine.
2. Select “A/T” with “DATA MONITOR” mode in CONSULT-II.
3. Drive vehicle and read out the value of “SFT SOL E OUT” and “SFT SOL E MON”.

Monitor item	Condition	Indication
● SFT SOL E OUT ● SFT SOL E MON	When shift solenoid valve E operates. (When driving in reverse gear.)	ON
	When shift solenoid valve E does not operate.	OFF

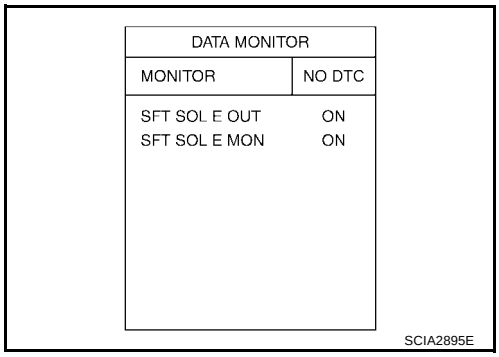

Without CONSULT-II

1. Drive vehicle.
2. Check voltage between TCM connector terminal and ground.

Connector	Terminal (Wire color)	Condition	Voltage (Approx.)
E142	47 (BR/Y) - Ground	When shift solenoid valve E operates. (When driving in reverse gear.)	Battery voltage
		When shift solenoid valve E does not operate.	0V

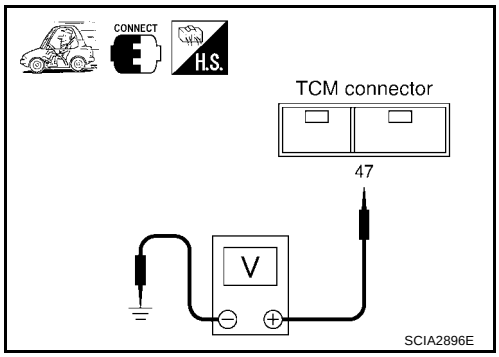

OK or NG

OK >> GO TO 7.
NG >> GO TO 2.

2. CHECK SHIFT SOLENOID VALVE E CIRCUIT

1. Turn ignition switch “OFF”.
2. Disconnect the TCM connector.
3. Check resistance between TCM connector terminal 47 and ground.

Connector	Terminal (Wire color)	Condition	Resistance (Approx.)
E142	47 (BR/Y) - Ground	Temperature: 20°C (68°F)	11 - 16 Ω

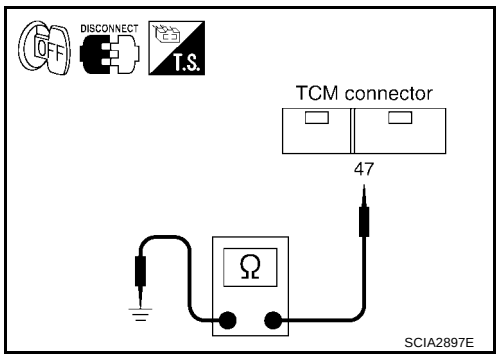

OK or NG

OK >> GO TO 7.
NG >> GO TO 3.

3. CHECK TERMINAL CORD ASSEMBLY WITH SHIFT SOLENOID VALVE E

1. Turn ignition switch “OFF”.
2. Disconnect terminal cord assembly harness connector.
3. Check resistance between terminal 5 and ground.

Connector	Terminal	Condition	Resistance (Approx.)
F30	5 - Ground	Temperature: 20°C (68°F)	11 - 16 Ω

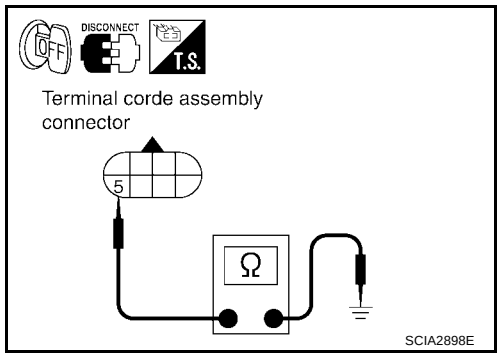

OK or NG

OK >> GO TO 4.
NG >> GO TO 5.

4. CHECK HARNESS BETWEEN TCM AND TERMINAL CORD ASSEMBLY

Check the following.

- Open or short-circuit in the harness between TCM and terminal cord assembly.

OK or NG

OK >> GO TO 7.
NG >> Repair or replace damaged parts.

5. CHECK SHIFT SOLENOID VALVE E

1. Remove side cover. Refer to AT-611, "Side cover"
2. Disconnect shift solenoid valve E harness connector.
3. Check resistance between terminal 1 and ground.

Connector	Terminal	Condition	Resistance (Approx.)
F71	1 - Ground	Temperature: 20°C (68°F)	11 - 16 Ω

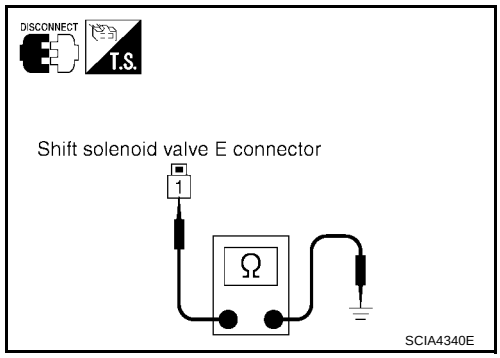

OK or NG

OK >> GO TO 6.
NG >> Replace the control valve assembly. Refer to AT-611, "Control Valve Assembly" .

6. CHECK HARNESS BETWEEN TERMINAL CORD ASSEMBLY AND SHIFT SOLENOID VALVE E

Check the following.

- Open or short-circuit in the harness between terminal cord assembly and shift solenoid valve E.

OK or NG

OK >> GO TO 7.
NG >> Repair or replace transmission wire. Refer to AT-611, "Transmission wire" .

7. CHECK DTC

Perform “DTC Confirmation Procedure”. Refer to AT-544, "DTC Confirmation Procedure" .

OK or NG

OK >> **INSPECTION END**
NG >> GO TO 8.

8. CHECK TCM

1. Check TCM input/output signal. Refer to AT-439, "TCM Input/Output Signal Reference Values" .
2. If NG, recheck TCM pin terminals for damage or loose connection with harness connector.

OK or NG

OK >> **INSPECTION END**
NG >> Repair or replace damaged parts.

Component Inspection

UCS002M7

SHIFT SOLENOID VALVE E

1. Remove side cover. Refer to AT-611, "Side cover" .
2. Disconnect shift solenoid valve E harness connector.
3. Check resistance between terminal 1 and ground.

Connector	Terminal	Condition	Resistance (Approx.)
F71	1 - Ground	Temperature: 20°C (68°F)	11 - 16 Ω

4. If NG, replace the control valve assembly. Refer to AT-611, "Control Valve Assembly" .

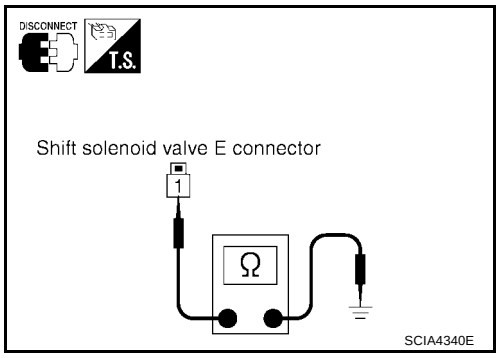

DTC P0775 PRESSURE CONTROL SOLENOID VALVE B (SHIFT PRESSURE)

PFP:31940

Description

UCS0012V

- The pressure control solenoid valve B is normally high, 3-port linear pressure control solenoid.
- The pressure control solenoid valve B controls linear shift pressure by control signal from TCM and controls 2nd coast brake directly under 2nd, 3rd, 4th and direct clutch directly under 5th and reverse.

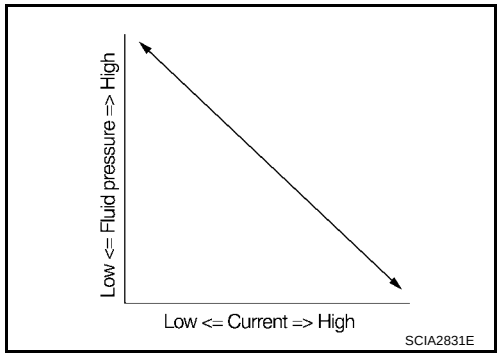

On Board Diagnosis Logic

UCS0012W

- This is an OBD-II self-diagnostic item.
- Diagnostic trouble code “PC SOL B(SFT/PRS)” with CONSULT-II or P0775 without CONSULT-II is detected under the following conditions.
  - When normal voltage is not applied to solenoid due to open, short, and so on.
  - When TCM detects as irregular by comparing target value with monitor value.

Possible Cause

UCS0012X

- Harness or connectors
  (The solenoid circuit is open or shorted.)
- Pressure control solenoid valve B

DTC Confirmation Procedure

UCS0012Y

NOTE:
If “DTC Confirmation Procedure” has been previously performed, always turn ignition switch “OFF” and wait at least 10 seconds before performing the next test.
After the repair, perform the following procedure to confirm the malfunction is eliminated.

WITH CONSULT-II

1. Turn ignition switch “ON”. (Do not start engine.)
2. Select “DATA MONITOR” mode for “A/T” with CONSULT-II.
3. Start engine.
4. Run engine for at least 13 consecutive seconds at idle speed.
5. If DTC is detected, go to AT-551, "Diagnostic Procedure" .

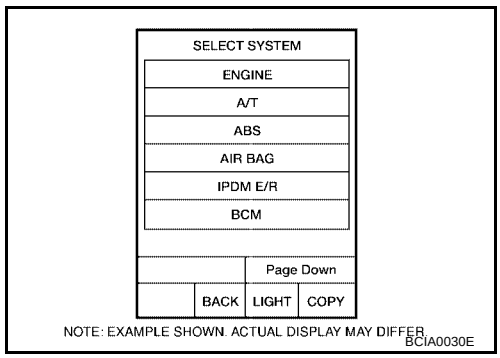

WITH GST

Follow the procedure “With CONSULT-II”.

Wiring Diagram — AT — PC/B

UCS0012Z

AT-PC/B-01

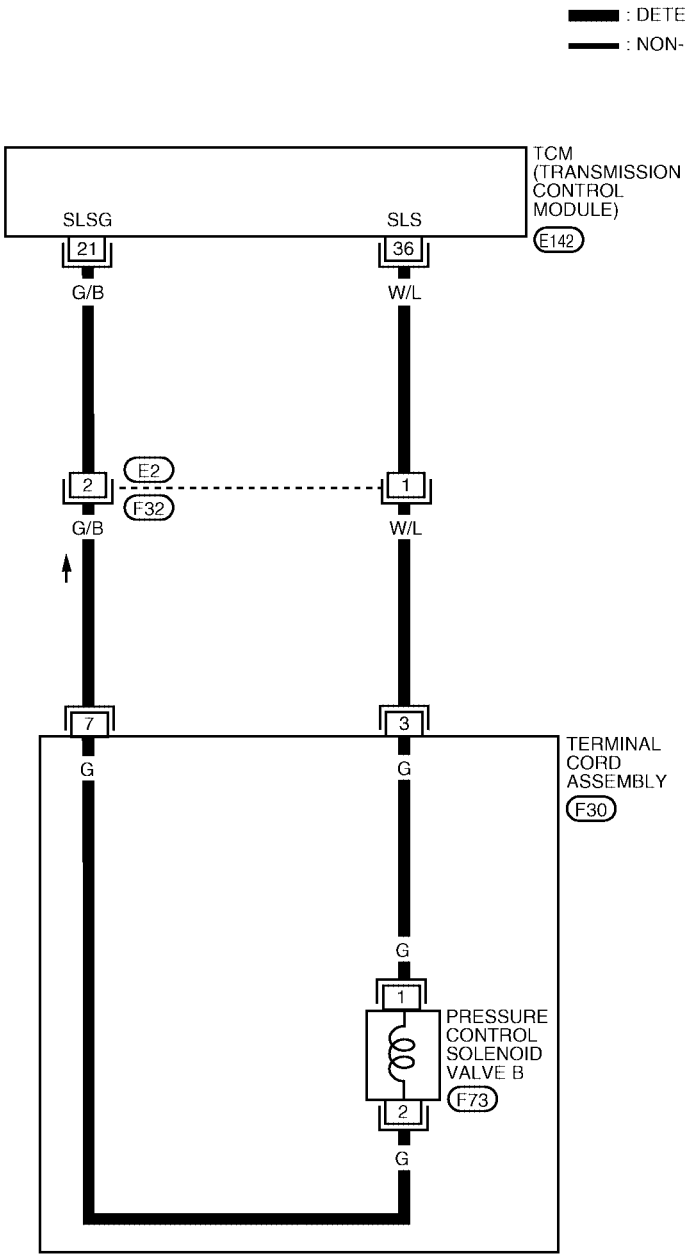

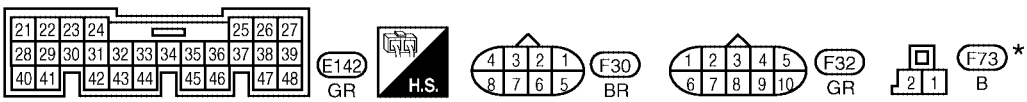

*: THIS CONNECTOR IS NOT SHOWN IN "HARNESS LAYOUT" OF PG SECTION.

BCWA0214E

TCM terminals and data are reference value. Measured between each terminal and ground.

Terminal	Wire color	Item	Condition		Data (Approx.)
21	G/B	Pressure control solenoid valve B ground		When engine is running with idle speed and setting selector lever to “P” position.	0V
36	W/L	Pressure control solenoid valve B		When engine is running with idle speed and setting selector lever to “P” position.	300Hz

Diagnostic Procedure

UCS002M8

1. CHECK PRESSURE CONTROL SOLENOID VALVE B SIGNAL

With CONSULT-II

1. After warming up the engine and transaxle, turn ignition switch “OFF”.
2. Turn ignition switch “ON”. (Do not start engine.)
3. Select “DATA MONITOR” mode for “A/T” with CONSULT-II.
4. Read out the value of “PC SOL B OUT” and “PC SOL B MON”.

Monitor item	Condition	Display value (Approx.)
● PC SOL B OUT	Selector lever: Manual shift gate position	1.00 A
● PC SOL B MON	Other than the above.	0.30 A

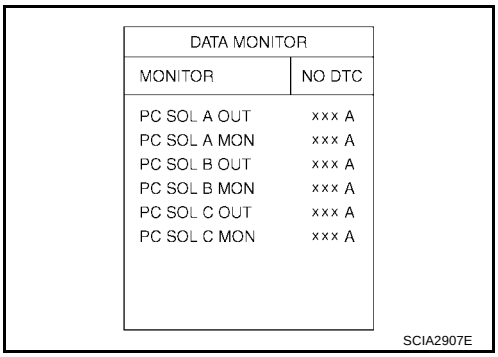

Without CONSULT-II

1. Start the engine.
2. Check pulse between TCM connector terminals 21 and 36.

Connector	Terminal (Wire color)	Condition	Data (Approx.)
E142	36 (W/L) - 21 (G/B) (Ground)	When engine is running with idle speed and setting selector lever to “P” position.	300 Hz

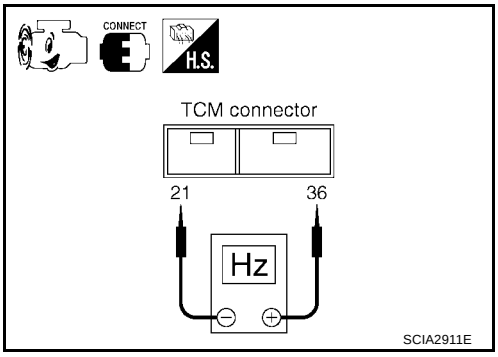

OK or NG

OK >> GO TO 7.
NG >> GO TO 2.

2. CHECK PRESSURE CONTROL SOLENOID VALVE B CIRCUIT

1. Turn ignition switch “OFF”.
2. Disconnect the TCM connector.
3. Check resistance between TCM connector terminals 21 and 36.

Connector	Terminal (Wire color)	Condition	Resistance (Approx.)
E142	36 (W/L) - 21 (G/B) (Ground)	Temperature: 20°C (68°F)	5.0 - 5.6 Ω

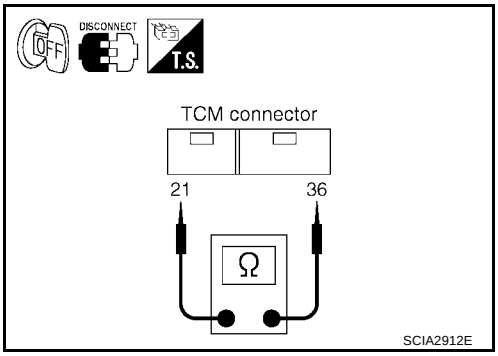

OK or NG

OK >> GO TO 7.
NG >> GO TO 3.

3. CHECK TERMINAL CORD ASSEMBLY WITH PRESSURE CONTROL SOLENOID VALVE B

1. Turn ignition switch “OFF”.
2. Disconnect terminal cord assembly harness connector.
3. Check resistance between terminals 3 and 7.

Connector	Terminal	Condition	Resistance (Approx.)
F30	3 - 7	Temperature: 20°C (68°F)	5.0 - 5.6 Ω

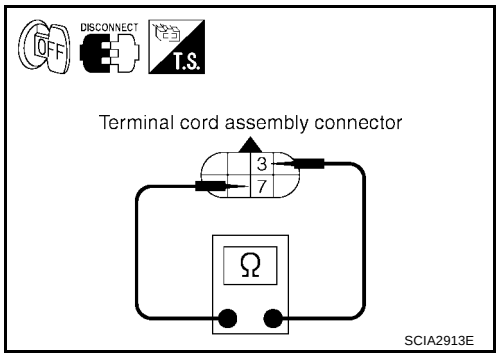

OK or NG

OK >> GO TO 4.
NG >> GO TO 5.

4. CHECK HARNESS BETWEEN TCM AND TERMINAL CORD ASSEMBLY

Check the following.

- Open or short-circuit in the harness between TCM and terminal cord assembly.

OK or NG

OK >> GO TO 7.
NG >> Repair or replace damaged parts.

5. CHECK PRESSURE CONTROL SOLENOID VALVE B

1. Remove side cover. Refer to AT-611, "Side cover" .
2. Disconnect pressure control solenoid valve B harness connector.
3. Check resistance between terminals 1 and 2.

Connector	Terminal	Condition	Resistance (Approx.)
F73	1 - 2	Temperature: 20°C (68°F)	5.0 - 5.6 Ω

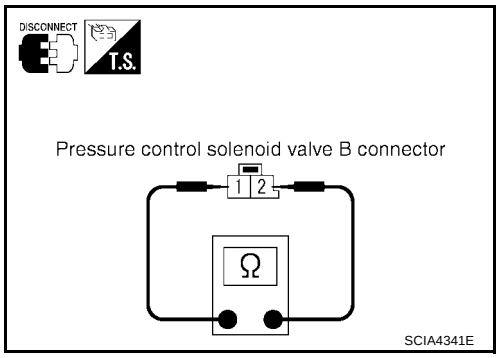

OK or NG

OK >> GO TO 6.
NG >> Replace the control valve assembly. Refer to AT-611, "Control Valve Assembly" .

6. CHECK HARNESS BETWEEN TERMINAL CORD ASSEMBLY AND PRESSURE CONTROL SOLENOID VALVE B

Check the following.

- Open or short-circuit in the harness between terminal cord assembly and pressure control solenoid valve B.

OK or NG

OK >> GO TO 7.
NG >> Repair or replace transmission wire. Refer to AT-611, "Transmission wire" .

7. CHECK DTC

Perform “DTC Confirmation Procedure”. Refer to AT-549, "DTC Confirmation Procedure" .

OK or NG

OK >> **INSPECTION END**
NG >> GO TO 8.

8. CHECK TCM

1. Check TCM input/output signal. Refer to AT-439, "TCM Input/Output Signal Reference Values" .
2. If NG, recheck TCM pin terminals for damage or loose connection with harness connector.

OK or NG

OK >> **INSPECTION END**
NG >> Repair or replace damaged parts.

Component Inspection

UCS002M9

PRESSURE CONTROL SOLENOID VALVE B

1. Remove side cover. Refer to AT-611, "Side cover" .
2. Disconnect pressure control solenoid valve B harness connector.
3. Check resistance between terminals 1 and 2.

Connector	Terminal	Condition	Resistance (Approx.)
F73	1 - 2	Temperature: 20°C (68°F)	5.0 - 5.6 Ω

4. If NG, replace the control valve assembly. Refer to AT-611, "Control Valve Assembly" .

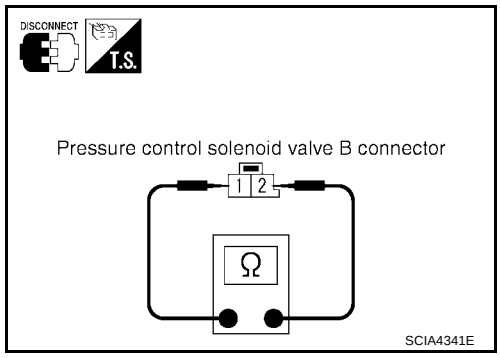

DTC P0780 SHIFT

PFP:31940

Description

UCS0014D

- This malfunction will not be detected while the O/D OFF indicator lamp is indicating another self-diagnosis malfunction.
- This malfunction is detected when the A/T does not shift as instructed by the TCM. This is not caused by electrical malfunction (circuits open or shorted) but by mechanical malfunction such as control valve sticking, improper solenoid valve operation, etc.

On Board Diagnosis Logic

UCS0014E

- This is an OBD-II self-diagnostic item.
- Diagnostic trouble code “SHIFT” with CONSULT-II or P0780 without CONSULT-II is detected under the following conditions.
  - When no rotation change occurs between input (turbine revolution sensor) and output (revolution sensor) and shifting time is long.
  - When shifting ends immediately.
  - When engine revs up unusually during shifting.

Possible Cause

UCS0014F

- Shift solenoid valve D
  (Off error.)
- Shift solenoid valve E
  (Off error.)
- Pressure control solenoid valve A
  (On/Off error.)
- Pressure control solenoid valve B
  (On/Off error.)
- Pressure control solenoid valve C
  (On/Off error.)
- Hydraulic control circuit

DTC Confirmation Procedure

UCS0014W

CAUTION:

- **Always drive vehicle at a safe speed.**
- **Be careful not to rev engine into the red zone on the tachometer.**

NOTE:

If “DTC Confirmation Procedure” has been previously performed, always turn ignition switch “OFF” and wait at least 10 seconds before performing the next test.

After the repair, perform the following procedure to confirm the malfunction is eliminated.

WITH CONSULT-II

1. Start engine and select “DATA MONITOR” mode for “A/T” with CONSULT-II.
2. Make sure that ATF temperature is within the range below.
   FLUID TEMP: More than 60°C (140°F)
   If out of range, drive the vehicle to warm up the fluid.
3. Drive vehicle and allow the following conditions.
   SLCT LVR POSI: “D” position
   GEAR: 1st ⇒ 2nd ⇒ 3rd ⇒ 4th ⇒ 5th position
   (Vehicle speed: Refer to AT-695, "VEHICLE SPEED WHEN SHIFTING GEARS" .)
4. If DTC is detected, go to AT-557, "Diagnostic Procedure" .

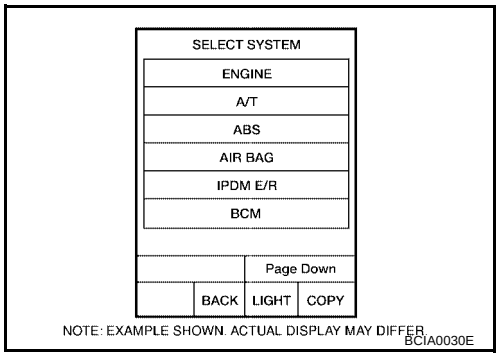

WITH GST

Follow the procedure “With CONSULT-II”.

Wiring Diagram — AT — SFTFNC

UCS0014H

AT-SFTFNC-01

: DETECTABLE LINE FOR DTC
: NON-DETECTABLE LINE FOR DTC

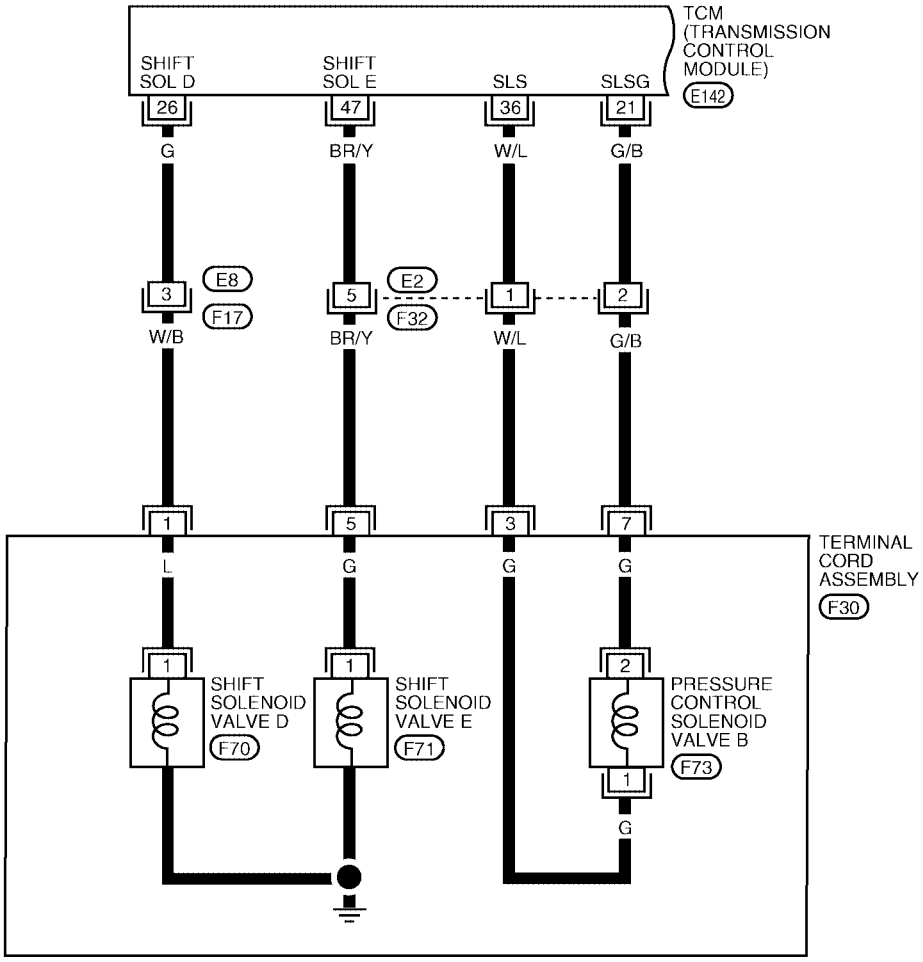

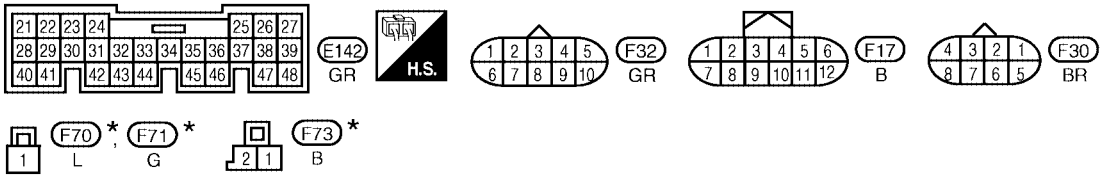

*: THIS CONNECTOR IS NOT SHOWN IN "HARNESS LAYOUT".

BCWA0215E

AT-SFTFNC-02

: DETECTABLE LINE FOR DTC
: NON-DETECTABLE LINE FOR DTC

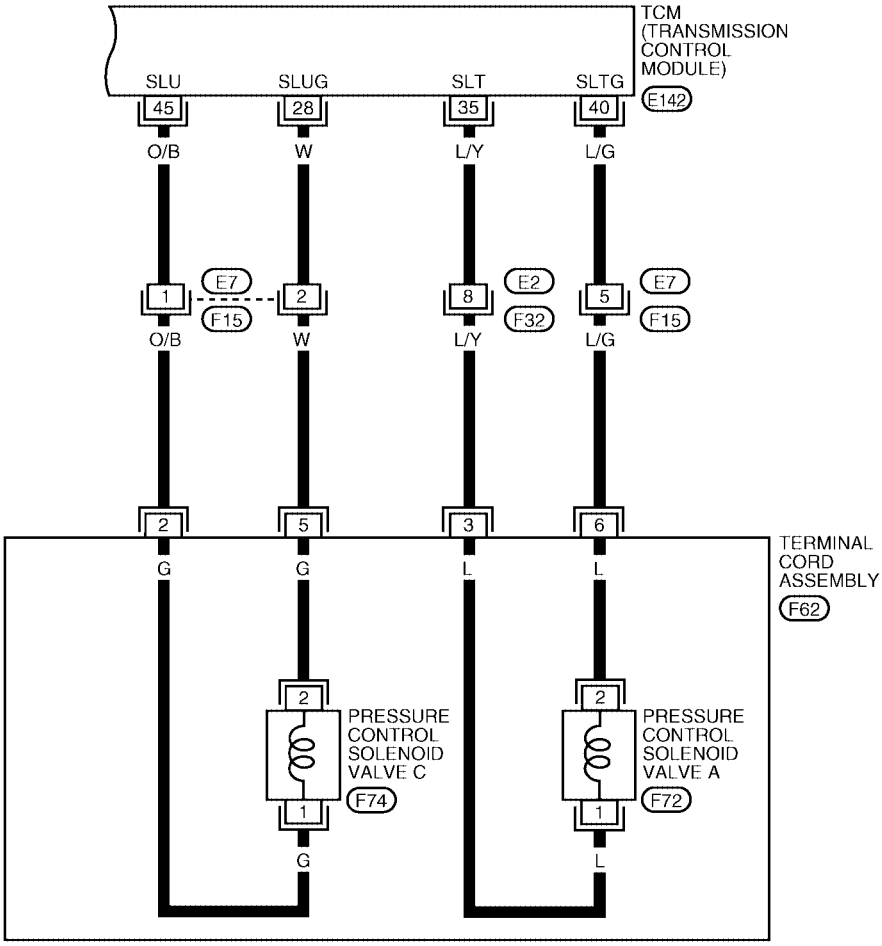

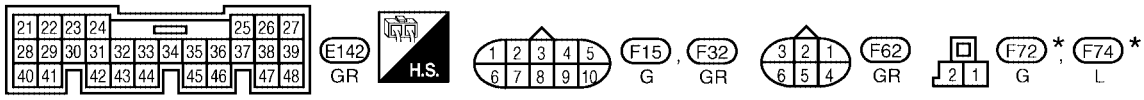

*: THIS CONNECTOR IS NOT SHOWN IN “HARNESS LAYOUT”.

BCWA0216E

TCM terminals and data are reference value. Measured between each terminal and ground.

Terminal	Wire color	Item	Condition		Data (Approx.)
21	G/B	Pressure control solenoid valve B ground		When engine is running with idle speed and setting selector lever to “P” position.	0V
26	G	Shift solenoid valve D		When shift solenoid valve D operates. (When driving in 3rd, 4th or 5th gear.)	Battery voltage
				When shift solenoid valve D does not operate.	0V
28	W	Pressure control solenoid valve C ground		When engine is running with idle speed and setting selector lever to “P” position.	0V
35	L/Y	Pressure control solenoid valve A		When engine is running with idle speed and setting selector lever to “P” position.	300Hz
36	W/L	Pressure control solenoid valve B		When engine is running with idle speed and setting selector lever to “P” position.	300Hz
40	L/G	Pressure control solenoid valve A ground		When engine is running with idle speed and setting selector lever to “P” position.	0V
45	O/B	Pressure control solenoid valve C		When engine is running with idle speed and setting selector lever to “P” position.	300Hz
47	BR/Y	Shift solenoid valve E		When shift solenoid valve E operates. (When driving in reverse gear.)	Battery voltage
				When shift solenoid valve E does not operate.	0V

Diagnostic Procedure

UCS0014I

1. CHECK EACH SHIFT SOLENOID VALVE CIRCUIT

Perform “Diagnostic Procedure” for the following DTCs.

- “DTC P0765 SHIFT SOLENOID VALVE D” (Refer to AT-541, "Diagnostic Procedure" .)
- “DTC P0770 SHIFT SOLENOID VALVE E” (Refer to AT-546, "Diagnostic Procedure" .)

OK or NG

OK >> GO TO 2.
NG >> Repair or replace damaged parts.

2. CHECK EACH PRESSURE CONTROL SOLENOID VALVE CIRCUIT

Perform “Diagnostic Procedure” for the following DTCs.

- “DTC P0745 PRESSURE CONTROL SOLENOID VALVE A” (Refer to AT-516, "Diagnostic Procedure" .)
- “DTC P0775 PRESSURE CONTROL SOLENOID VALVE B” (Refer to AT-551, "Diagnostic Procedure" .)
- “DTC P0795 PRESSURE CONTROL SOLENOID VALVE C” (Refer to AT-560, "Diagnostic Procedure" .)

OK or NG

OK >> GO TO 3.
NG >> Repair or replace damaged parts.

3. CHECK DTC

Perform “DTC Confirmation Procedure”. Refer to AT-554, "DTC Confirmation Procedure" .

OK or NG

OK >> **INSPECTION END**
NG >> Replace transmission wire or control valve assembly. Refer to AT-611, "Transmission wire" or AT-611, "Control Valve Assembly" .

DTC P0795 PRESSURE CONTROL SOLENOID VALVE C (TCC AND SHIFT PRESSURE)

PFP:31940

Description

UCS000UU

- The pressure control solenoid valve C is normally low, 3-port linear pressure control solenoid.
- The pressure control solenoid valve C is activated to control the apply and release of the 2nd brake and 1st and reverse brake, and torque converter clutch.
- Lock-up operation, however, is prohibited when A/T fluid temperature is too low.
- When the accelerator pedal is depressed (less than 1/8) in lock-up condition, the engine speed should not change abruptly. If there is a big jump in engine speed, there is no lock-up.

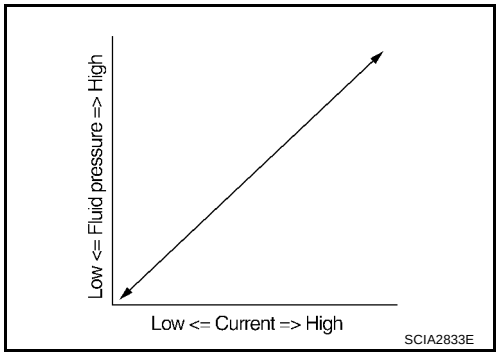

On Board Diagnosis Logic

UCS000UW

- This is an OBD-II self-diagnostic item.
- Diagnostic trouble code “PC SOL C(TCC&SFT)” with CONSULT-II or P0795 without CONSULT-II is detected under the following conditions.
  - When normal voltage is not applied to solenoid due to open, short, and so on.
  - When TCM detects as irregular by comparing target value with monitor value.

Possible Cause

UCS000UX

- Harness or connectors
  (The solenoid circuit is open or shorted.)
- Pressure control solenoid valve C

DTC Confirmation Procedure

UCS000UY

NOTE:
If “DTC Confirmation Procedure” has been previously performed, always turn ignition switch “OFF” and wait at least 10 seconds before performing the next test.
After the repair, perform the following procedure to confirm the malfunction is eliminated.

WITH CONSULT-II

1. Turn ignition switch “ON”. (Do not start engine.)
2. Select “DATA MONITOR” mode for “A/T” with CONSULT-II.
3. Start engine.
4. Run engine for at least 13 consecutive seconds at idle speed.
5. If DTC is detected, go to AT-560, "Diagnostic Procedure" .

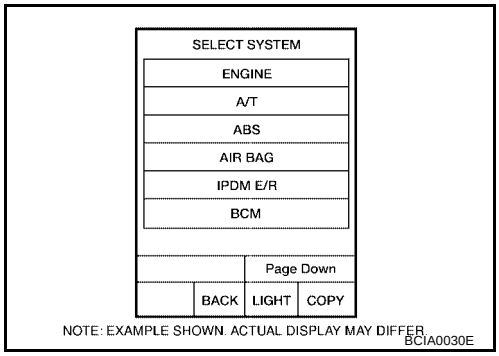

WITH GST

Follow the procedure “With CONSULT-II”.

Wiring Diagram — AT — PC/C

UCS000UZ

AT-PC/C-01

: DETECTABLE LINE FOR DTC
: NON-DETECTABLE LINE FOR DTC

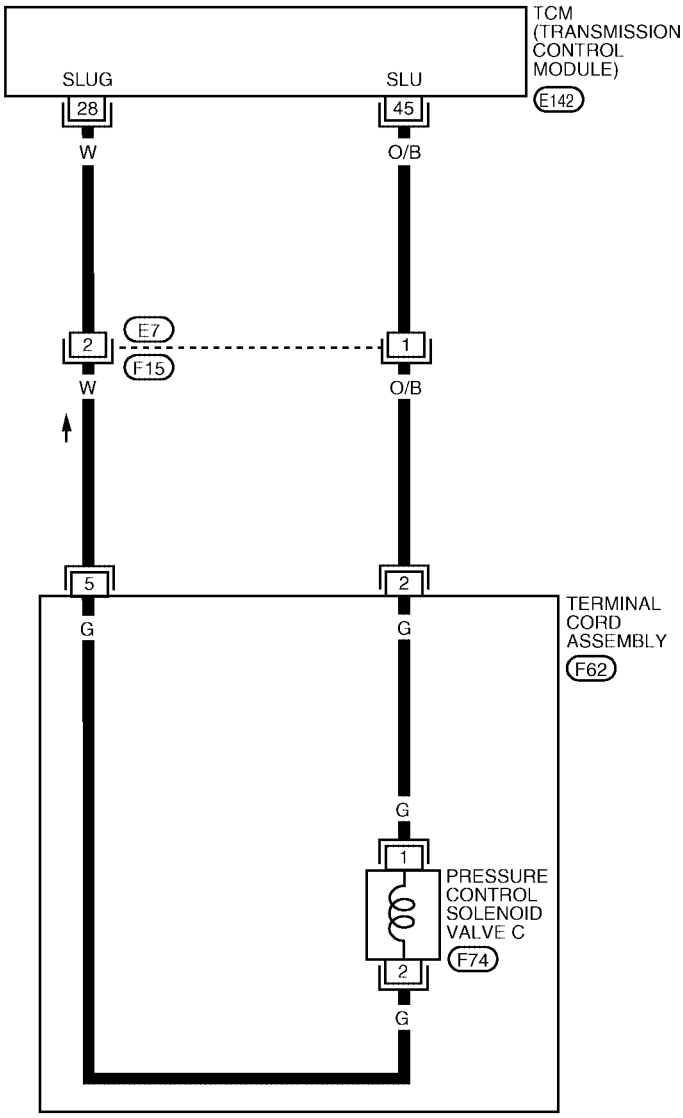

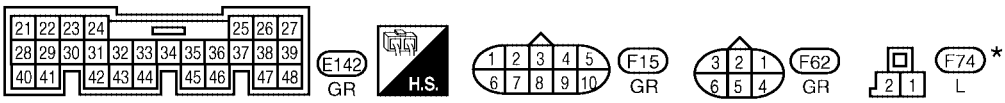

*: THIS CONNECTOR IS NOT SHOWN IN "HARNESS LAYOUT" OF PG SECTION.

BCWA0217E

TCM terminals and data are reference value. Measured between each terminal and ground.

Terminal	Wire color	Item	Condition		Data (Approx.)
28	W	Pressure control solenoid valve C ground		When engine is running with idle speed and setting selector lever to “P” position.	0V
45	O/B	Pressure control solenoid valve C		When engine is running with idle speed and setting selector lever to “P” position.	300Hz

Diagnostic Procedure

UCS002MD

1. CHECK PRESSURE CONTROL SOLENOID VALVE C SIGNAL

With CONSULT-II

1. After warming up the engine and transaxle, turn ignition switch “OFF”.
2. Turn ignition switch “ON”. (Do not start engine.)
3. Select “A/T” with “DATA MONITOR” mode in CONSULT-II.
4. Read out the value of “PC SOL C OUT” and “PC SOL C MON”.

Monitor item	Condition	Display value (Approx.)
● PC SOL C OUT	Selector lever: Manual shift gate position	1.00 A
● PC SOL C MON	Other than the above.	0.20 A

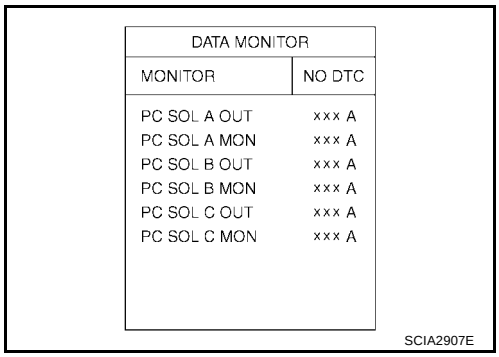

Without CONSULT-II

1. Start the engine.
2. Check pulse between TCM connector terminals 28 and 45.

Connector	Terminal (Wire color)	Condition	Data (Approx.)
E142	45 (O/B) - 28 (W) (Ground)	When engine is running with idle speed and setting selector lever to “P” position.	300 Hz

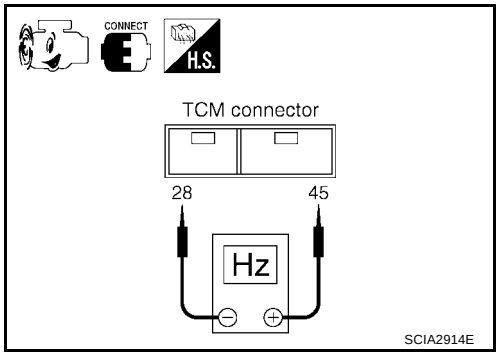

OK or NG

OK >> GO TO 7.
NG >> GO TO 2.

2. CHECK PRESSURE CONTROL SOLENOID VALVE C CIRCUIT

1. Turn ignition switch “OFF”.
2. Disconnect the TCM connector.
3. Check resistance between TCM connector terminals 28 and 45.

Connector	Terminal (Wire color)	Condition	Resistance (Approx.)
E142	45 (O/B) - 28 (W) (Ground)	Temperature: 20°C (68°F)	5.0 - 5.6 Ω

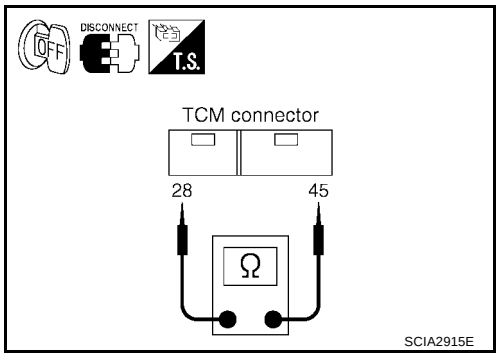

OK or NG

OK >> GO TO 7.
NG >> GO TO 3.

3. CHECK TERMINAL CORD ASSEMBLY WITH PRESSURE CONTROL SOLENOID VALVE C

1. Turn ignition switch “OFF”.
2. Disconnect terminal cord assembly harness connector.
3. Check resistance between terminals 2 and 5.

Connector	Terminal	Condition	Resistance (Approx.)
F62	2 - 5	Temperature: 20°C (68°F)	5.0 - 5.6 Ω

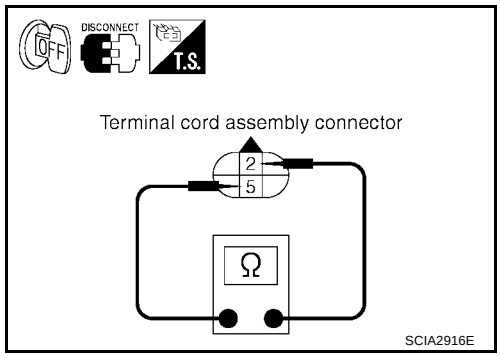

OK or NG

OK >> GO TO 4.
NG >> GO TO 5.

4. CHECK HARNESS BETWEEN TCM AND TERMINAL CORD ASSEMBLY

Check the following.

- Open or short-circuit in the harness between TCM and terminal cord assembly.

OK or NG

OK >> GO TO 7.
NG >> Repair or replace damaged parts.

5. CHECK PRESSURE CONTROL SOLENOID VALVE C

1. Remove side cover. Refer to AT-611, "Side cover" .
2. Disconnect pressure control solenoid valve C harness connector.
3. Check resistance between terminals 1 and 2.

Connector	Terminal	Condition	Resistance (Approx.)
F74	1 - 2	Temperature: 20°C (68°F)	5.0 - 5.6 Ω

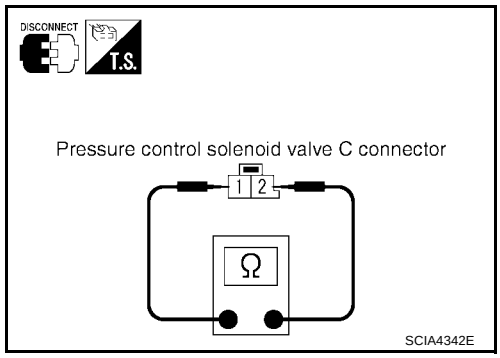

OK or NG

OK >> GO TO 6.
NG >> Replace the control valve assembly. Refer to AT-611, "Control Valve Assembly" .

6. CHECK HARNESS BETWEEN TERMINAL CORD ASSEMBLY AND PRESSURE CONTROL SOLENOID VALVE C

Check the following.

- Open or short-circuit in the harness between terminal cord assembly and pressure control solenoid valve C.

OK or NG

OK >> GO TO 7.
NG >> Repair or replace transmission wire. Refer to AT-611, "Transmission wire" .

7. CHECK DTC

Perform “DTC Confirmation Procedure”. Refer to AT-558, "DTC Confirmation Procedure" .

OK or NG

OK >> **INSPECTION END**
NG >> GO TO 8.

8. CHECK TCM

1. Check TCM input/output signal. Refer to AT-439, "TCM Input/Output Signal Reference Values" .
2. If NG, recheck TCM pin terminals for damage or loose connection with harness connector.

OK or NG

OK >> **INSPECTION END**
NG >> Repair or replace damaged parts.

Component Inspection

UCS002MA

PRESSURE CONTROL SOLENOID VALVE C

1. Remove side cover. Refer to AT-611, "Side cover" .
2. Disconnect pressure control solenoid valve C harness connector.
3. Check resistance between terminals 1 and 2.

Connector	Terminal	Condition	Resistance (Approx.)
F74	1 - 2	Temperature: 20°C (68°F)	5.0 - 5.6 Ω

4. If NG, replace the control valve assembly. Refer to AT-611, "Control Valve Assembly" .

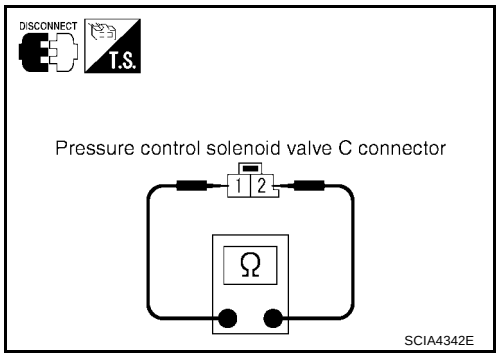

DTC P0797 PRESSURE CONTROL SOLENOID VALVE C STUCK ON

PFP:31940

Description

UCS00147

- This malfunction will not be detected while the O/D OFF indicator lamp is indicating another self-diagnosis malfunction.
- This is not caused by electrical malfunction (circuits open or shorted) but by mechanical malfunction such as control valve sticking, improper solenoid valve operation, etc.
- The pressure control solenoid valve C is normally low, 3-port linear pressure control solenoid.
- The pressure control solenoid valve C is activated to control the apply and release of the 2nd brake and 1st and reverse brake, and torque converter clutch.
- Lock-up operation, however, is prohibited when A/T fluid temperature is too low.
- When the accelerator pedal is depressed (less than 1/8) in lock-up condition, the engine speed should not change abruptly. If there is a big jump in engine speed, there is no lock-up.

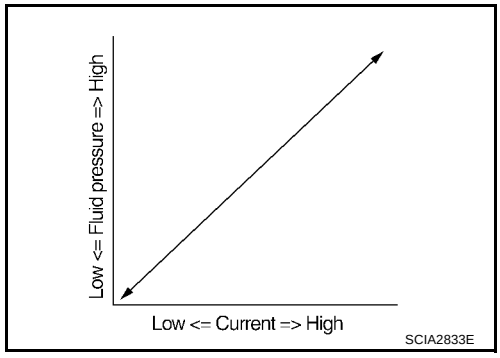

On Board Diagnosis Logic

UCS00148

- This is an OBD-II self-diagnostic item.
- Diagnostic trouble code “PC SOL C STC ON” with CONSULT-II or P0797 without CONSULT-II is detected when condition of pressure control solenoid valve C is different from monitor value, and relation between gear position and actual gear ratio or lock-up status is irregular.

Possible Cause

UCS00149

- Pressure control solenoid valve C
  (On stick.)
- Hydraulic control circuit

DTC Confirmation Procedure

UCS0014A

NOTE:
If “DTC Confirmation Procedure” has been previously performed, always turn ignition switch “OFF” and wait at least 10 seconds before performing the next test.
After the repair, perform the following procedure to confirm the malfunction is eliminated.

WITH CONSULT-II

1. Turn ignition switch “ON”. (Do not start engine.)
2. Select “DATA MONITOR” mode for “A/T” with CONSULT-II.
3. Start engine.
4. Run engine for at least 4 consecutive minutes at idle speed.
5. If DTC is detected, go to AT-565, "Diagnostic Procedure" .

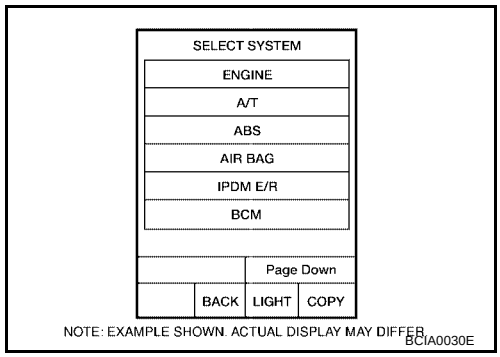

WITH GST

Follow the procedure “With CONSULT-II”.

Wiring Diagram — AT — PC/CS

UCS0014B

AT-PC/CS-01

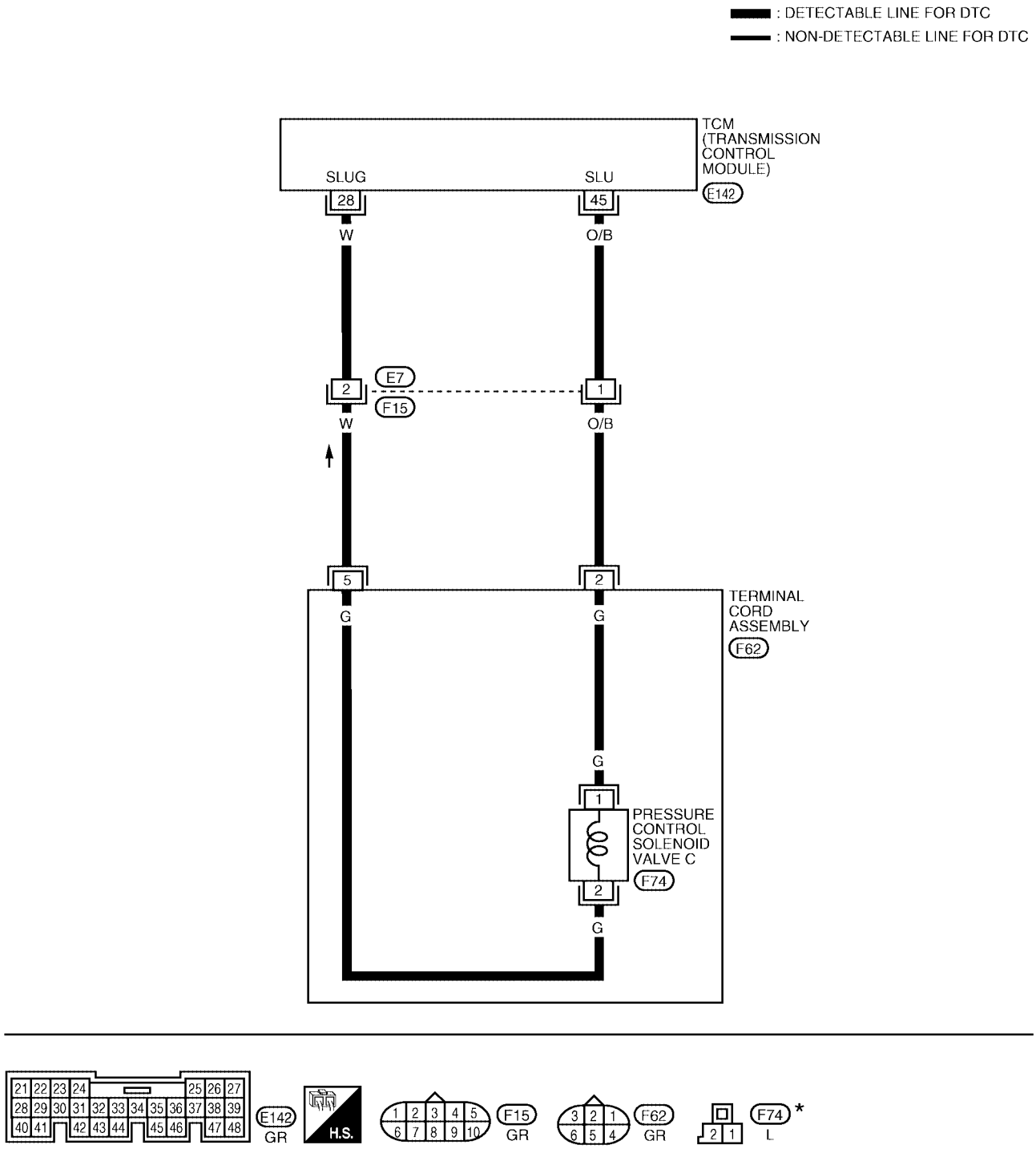

*: THIS CONNECTOR IS NOT SHOWN IN "HARNESS LAYOUT" OF PG SECTION.

BCWA0218E

TCM terminals and data are reference value. Measured between each terminal and ground.

Terminal	Wire color	Item	Condition		Data (Approx.)
28	W	Pressure control solenoid valve C ground		When engine is running with idle speed and setting selector lever to “P” position.	0V
45	O/B	Pressure control solenoid valve C		When engine is running with idle speed and setting selector lever to “P” position.	300Hz

Diagnostic Procedure

UCS002MB

1. CHECK PRESSURE CONTROL SOLENOID VALVE C SIGNAL

With CONSULT-II

1. After warming up the engine and transaxle, turn ignition switch “OFF”.
2. Turn ignition switch “ON”. (Do not start engine.)
3. Select “A/T” with “DATA MONITOR” mode in CONSULT-II.
4. Read out the value of “PC SOL C OUT” and “PC SOL C MON”.

Monitor item	Condition	Display value (Approx.)
● PC SOL C OUT	Selector lever: Manual shift gate position	1.00 A
● PC SOL C MON	Other than the above.	0.20 A

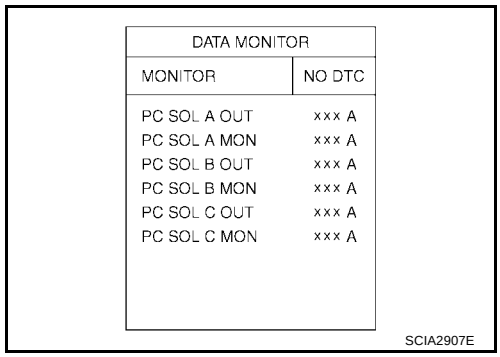

Without CONSULT-II

1. Start the engine.
2. Check pulse between TCM connector terminals 28 and 45.

Connector	Terminal (Wire color)	Condition	Data (Approx.)
E142	45 (O/B) - 28 (W) (Ground)	When engine is running with idle speed and setting selector lever to “P” position.	300 Hz

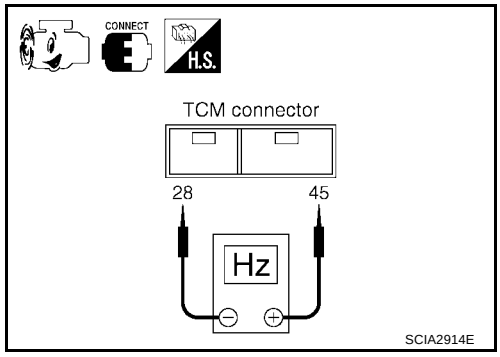

OK or NG

OK >> GO TO 7.
NG >> GO TO 2.

2. CHECK PRESSURE CONTROL SOLENOID VALVE C CIRCUIT

1. Turn ignition switch “OFF”.
2. Disconnect the TCM connector.
3. Check resistance between TCM connector terminals 28 and 45.

Connector	Terminal (Wire color)	Condition	Resistance (Approx.)
E142	45 (O/B) - 28 (W) (Ground)	Temperature: 20°C (68°F)	5.0 - 5.6 Ω

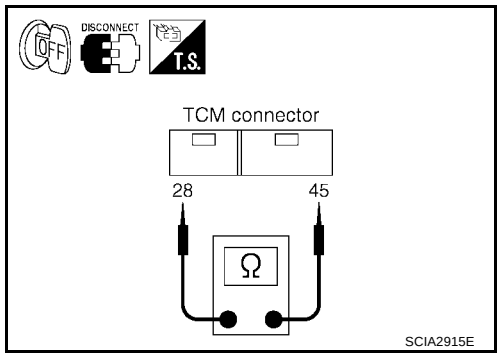

OK or NG

OK >> GO TO 7.
NG >> GO TO 3.

3. CHECK TERMINAL CORD ASSEMBLY WITH PRESSURE CONTROL SOLENOID VALVE C

1. Turn ignition switch “OFF”.
2. Disconnect terminal cord assembly harness connector.
3. Check resistance between terminals 2 and 5.

Connector	Terminal	Condition	Resistance (Approx.)
F62	2 - 5	Temperature: 20°C (68°F)	5.0 - 5.6 Ω

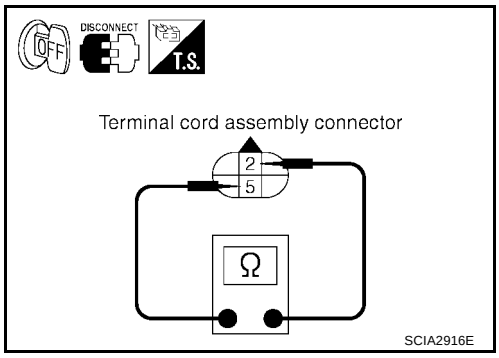

OK or NG

OK >> GO TO 4.
NG >> GO TO 5.

4. CHECK HARNESS BETWEEN TCM AND TERMINAL CORD ASSEMBLY

Check the following.

- Open or short-circuit in the harness between TCM and terminal cord assembly.

OK or NG

OK >> GO TO 7.
NG >> Repair or replace damaged parts.

5. CHECK PRESSURE CONTROL SOLENOID VALVE C

1. Remove side cover. Refer to AT-611, "Side cover" .
2. Disconnect pressure control solenoid valve C harness connector.
3. Check resistance between terminals 1 and 2.

Connector	Terminal	Condition	Resistance (Approx.)
F74	1 - 2	Temperature: 20°C (68°F)	5.0 - 5.6 Ω

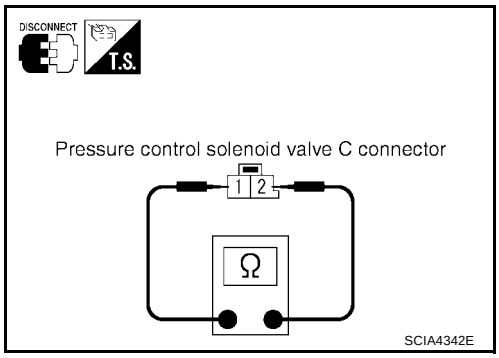

OK or NG

OK >> GO TO 6.
NG >> Replace the control valve assembly. Refer to AT-611, "Control Valve Assembly" .

6. CHECK HARNESS BETWEEN TERMINAL CORD ASSEMBLY AND PRESSURE CONTROL SOLENOID VALVE C

Check the following.

- Open or short-circuit in the harness between terminal cord assembly and pressure control solenoid valve C.

OK or NG

OK >> GO TO 7.
NG >> Repair or replace transmission wire. Refer to AT-611, "Transmission wire" .

7. CHECK TCM

1. Check TCM input/output signal. Refer to AT-439, "TCM Input/Output Signal Reference Values" .
2. If NG, recheck TCM pin terminals for damage or loose connection with harness connector.

OK or NG

OK >> GO TO 8.
NG >> Repair or replace damaged parts.

8. CHECK DTC

Perform “DTC Confirmation Procedure”. Refer toAT-563, "DTC Confirmation Procedure" .

OK or NG

OK >> **INSPECTION END**
NG >> Replace the control valve assembly. Refer to AT-611, "Control Valve Assembly" .

Component Inspection

UCS002MC

PRESSURE CONTROL SOLENOID VALVE C

1. Remove side cover. Refer to AT-611, "Side cover" .
2. Disconnect pressure control solenoid valve C harness connector.
3. Check resistance between terminals 1 and 2.

Connector	Terminal	Condition	Resistance (Approx.)
F74	1 - 2	Temperature: 20°C (68°F)	5.0 - 5.6 Ω

4. If NG, replace the control valve assembly. Refer to AT-611, "Control Valve Assembly" .

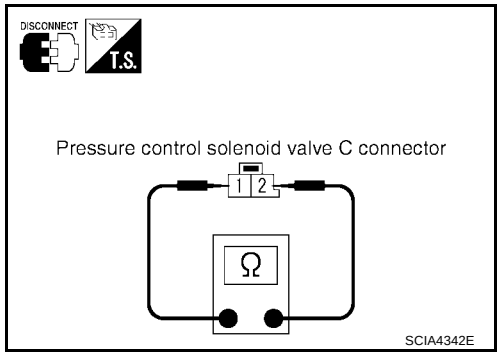

DTC P0825 LEVER SWITCH CIRCUIT

PFP:25130

Description

UCS0010X

Lever switch is installed in A/T device. It sends lever switch position (ON or OFF) signals to TCM.

On Board Diagnosis Logic

UCS0010Z

- This is not an OBD-II self-diagnostic item.
- Diagnostic trouble code “GEAR LEVER SWITCH” with CONSULT-II is detected when TCM monitors lever switch signal, and judges as irregular when impossible input pattern occurs.

Possible Cause

UCS00110

- Harness or connectors
  (Lever switch circuit is open or shorted.)
- Lever switch (built into A/T device)

DTC Confirmation Procedure

UCS00111

NOTE:
If “DTC Confirmation Procedure” has been previously performed, always turn ignition switch “OFF” and wait at least 10 seconds before performing the next test.
After the repair, perform the following procedure to confirm the malfunction is eliminated.

WITH CONSULT-II

1. Turn ignition switch “ON”. (Do not start engine.)
2. Select “DATA MONITOR” mode for “A/T” with CONSULT-II.
3. Set overdrive control switch to “OFF” position.
4. Wait for at least 30 consecutive seconds.
5. If DTC is detected, go to AT-570, "Diagnostic Procedure" .

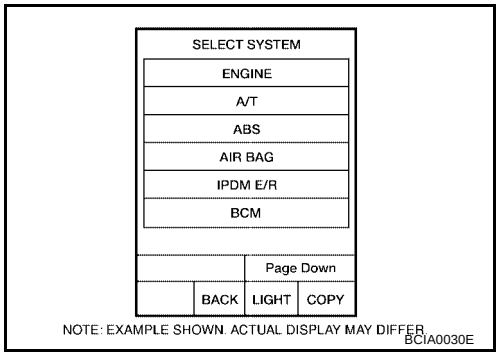

Wiring Diagram — AT — LVRSW

UCS00112

AT-LVRSW

: DETECTABLE LINE FOR DTC
: NON-DETECTABLE LINE FOR DTC

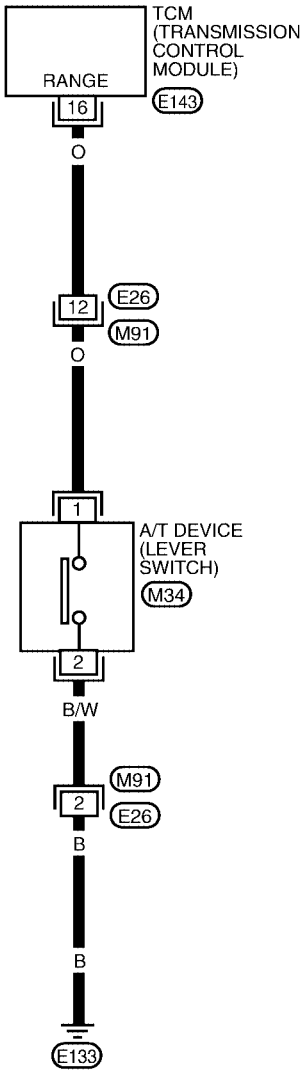

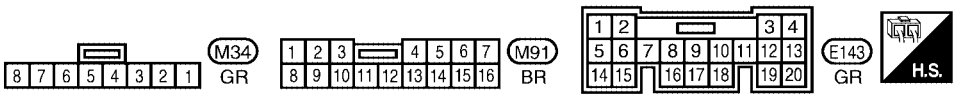

BCWA0423E

TCM terminal and data are reference value. Measured between each terminal and ground.

Terminal	Wire color	Item	Condition		Data (Approx.)
16	O	Lever switch		Lever switch: “ON” position	0V
				Lever switch: “OFF” position	Battery voltage

Diagnostic Procedure

UCS00113

1. CHECK LEVER SWITCH CIRCUIT

With CONSULT-II

1. Turn ignition switch “ON”. (Do not start engine.)
2. Select “DATA MONITOR” mode for “A/T” with CONSULT-II.
3. Read out ON/OFF switching action of the “RANGE SLCT SW”.

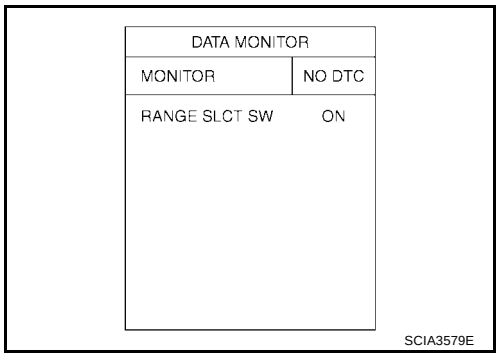

Without CONSULT-II

1. Turn ignition switch “ON”. (Do not start engine.)
2. Check voltage between the TCM connector terminal and ground.

Connector No.	Terminal (Wire color)	Condition	Voltage (Approx.)
E143	16 (O) - Ground	Lever switch: “ON” position	0V
		Lever switch: “OFF” position	Battery voltage

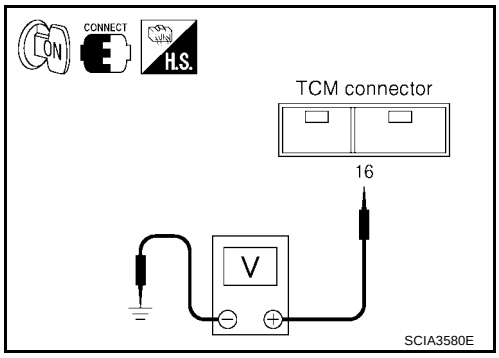

OK or NG

OK >> GO TO 4.
NG >> GO TO 2.

2. CHECK HARNESS BETWEEN TCM AND A/T DEVICE (LEVER SWITCH)

1. Turn ignition switch “OFF”.
2. Disconnect the TCM connector.
3. Check the continuity between TCM connector terminal 16 and ground.

Connector No.	Terminal (Wire color)	Condition	Continuity
E143	16 (O) - Ground	Lever switch: “ON” position	Yes
		Lever switch: “OFF” position	No

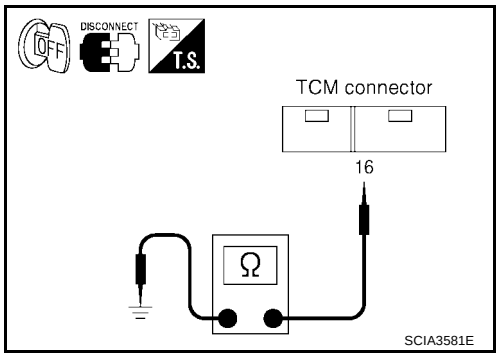

4. If OK, check harness for short-circuit to ground or power source.

OK or NG

OK >> GO TO 4.
NG >> GO TO 3.

3. DETECT MALFUNCTIONING ITEM

Check the following.

- Open or short-circuit in the harness between TCM and A/T device (lever switch).
- Open or short-circuit in the harness for ground of lever switch.
- Lever switch. Refer to AT-571, "Component Inspection" .

OK or NG

OK >> GO TO 4.
NG >> Repair or replace damaged parts.

4. CHECK DTC

Perform “DTC Confirmation Procedure”. Refer to AT-568, "DTC Confirmation Procedure" .

OK or NG

OK >> **INSPECTION END**
NG >> GO TO 5.

5. CHECK TCM

1. Check TCM input/output signal.
2. If NG, recheck TCM pin terminals for damage or loose connection with harness connector.

OK or NG

OK >> **INSPECTION END**
NG >> Repair or replace damaged parts.

Component Inspection

UCS00114

LEVER SWITCH

Check continuity between A/T device (lever switch) harness connector M34 terminals 1 and 2.

Switch position	Continuity
ON	Yes
OFF	No

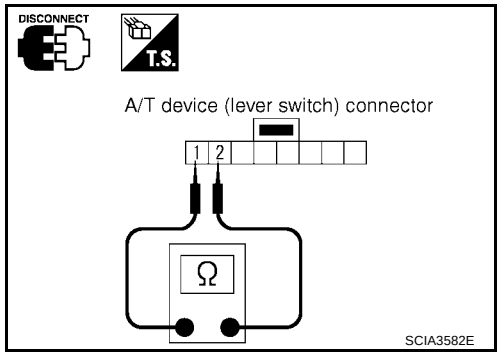

DTC P0882 TCM POWER INPUT SIGNAL

PFP:31036

Description

UCS000VD

When the power supply to the TCM is cut “OFF”, for example because the battery is removed, and the self-diagnostics memory function stops, malfunction is detected.

On Board Diagnosis Logic

UCS000VE

- This is an OBD-II self-diagnostic item.
- Diagnostic trouble code “TCM POWER INPT SIG” with CONSULT-II or P0882 without CONSULT-II is detected when voltage supplied to TCM is too low.

Possible Cause

UCS000VF

- Harness or connectors
  (Battery or ignition switch and TCM circuit is open or shorted.)
- A/T PV IGN relay

DTC Confirmation Procedure

UCS0014X

CAUTION:

- **Always drive vehicle at a safe speed.**
- **Be careful not to rev engine into the red zone on the tachometer.**

NOTE:

If “DTC Confirmation Procedure” has been previously performed, always turn ignition switch “OFF” and wait at least 10 seconds before performing the next test.

After the repair, perform the following procedure to confirm the malfunction is eliminated.

WITH CONSULT-II

1. Turn ignition switch “ON”. (Do not start engine.)
2. Select “DATA MONITOR” mode for “A/T” with CONSULT-II.
3. Start engine.
4. Depress accelerator pedal or drive vehicle and maintain the following condition for at least 20 consecutive seconds.
   TURBINE REV: More than 800 rpm
5. If DTC is detected, go to AT-575, "Diagnostic Procedure" .

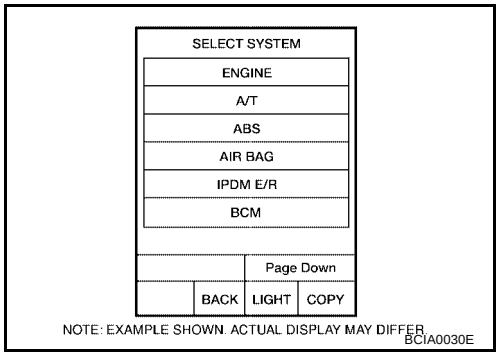

Wiring Diagram — AT — PWR/IN

UCS000VH

AT-PWR/IN-01

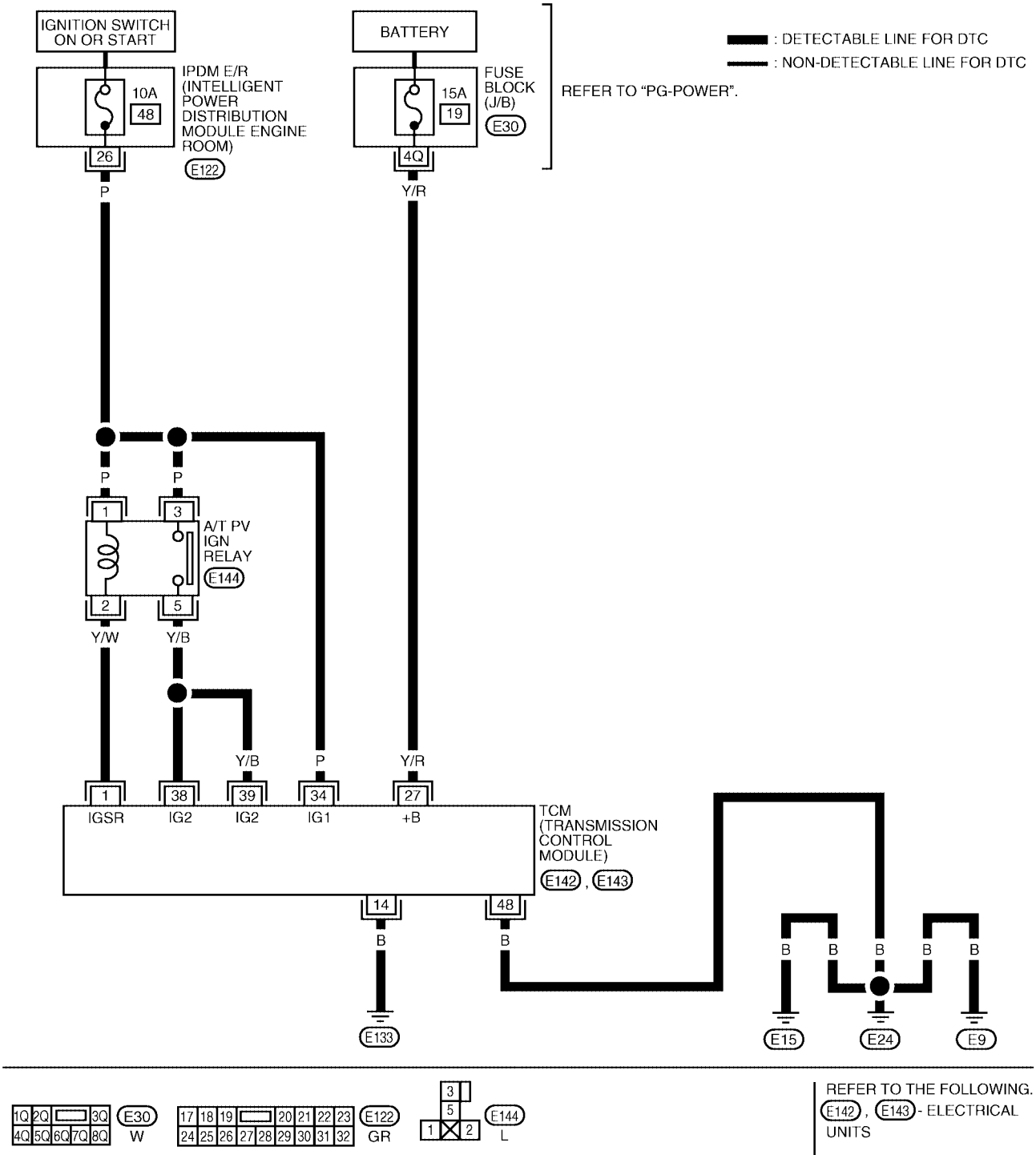

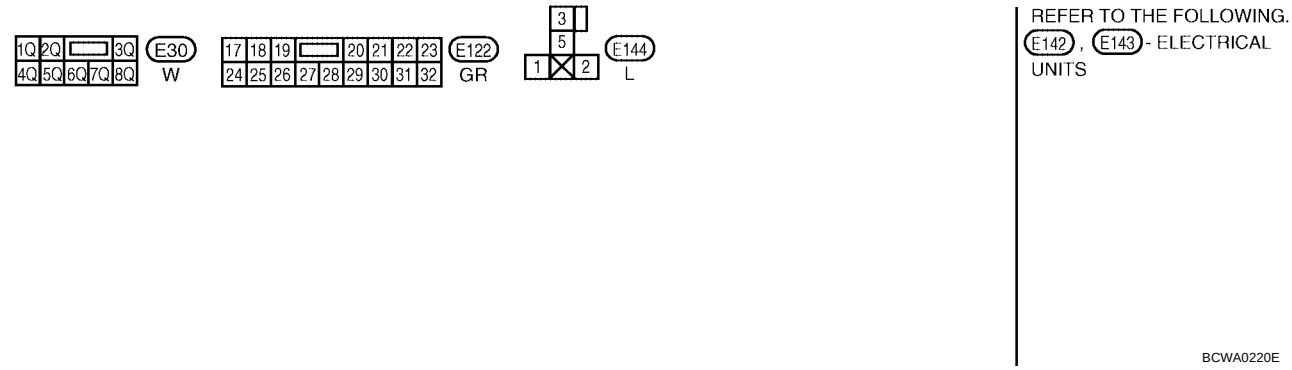

TCM terminals and data are reference value. Measured between each terminal and ground.

Terminal	Wire color	Item	Condition		Data (Approx.)
1	Y/W	A/T PV IGN relay		When turning ignition switch ON.	0 - 1.5V
				When turning ignition switch OFF.	0V
14	B	Ground	–		0V
27	Y/R	Power supply (Memory back-up)		When turning ignition switch ON.	Battery voltage
				When turning ignition switch OFF.	Battery voltage
34	P	Power supply		When turning ignition switch ON.	Battery voltage
				When turning ignition switch OFF.	0V
38	Y/B	Power supply (A/T PV IGN relay)		When turning ignition switch ON.	Battery voltage
				Measure 3 seconds after switching “OFF” the ignition switch.	0V
39	Y/B	Power supply (A/T PV IGN relay)		When turning ignition switch ON.	Battery voltage
				Measure 3 seconds after switching “OFF” the ignition switch.	0V
48	B	Ground	–		0V

Diagnostic Procedure

UCS000VI

1. CHECK TCM POWER SOURCE CIRCUIT

1. Turn ignition switch “ON”. (Do not start engine.)
2. Check voltage between TCM terminals and ground.

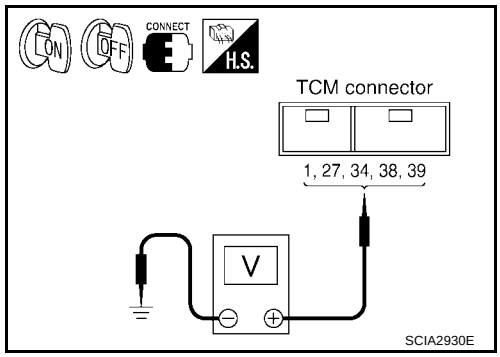

Connector	Terminal (Wire color)	Voltage (Approx.)
E143	1 (Y/W) - Ground	0 - 1.5V
E142	27 (Y/R) - Ground	Battery voltage
	34 (P) - Ground	
	38 (Y/B) - Ground	
	39 (Y/B) - Ground	

3. Turn ignition switch “OFF”.
4. Check voltage between TCM terminals and ground.

Connector	Terminal (Wire color)	Voltage (Approx.)
E143	1 (Y/W) - Ground	0V
E142	27 (Y/R) - Ground	Battery voltage
	34 (P) - Ground	0V
	38 (Y/B) - Ground	0V
	39 (Y/B) - Ground	0V

OK or NG

OK >> GO TO 3.
NG >> GO TO 2.

2. DETECT MALFUNCTIONING ITEM

Check the following:

- Harness for short or open between battery and TCM terminal 27
- Harness for short or open between ignition switch and TCM terminals 1, 34, 38 and 39
- 10A fuse [No. 19, located in the fuse block (J/B) or No. 48, located in the IPDM E/R]
- Ignition switch. Refer to PG-4, "POWER SUPPLY ROUTING CIRCUIT" .
- A/T PV IGN relay. Refer to AT-576, "Component Inspection" .

OK or NG

OK >> GO TO 3.
NG >> Repair or replace damaged parts.

3. CHECK TCM GROUND CIRCUIT

1. Turn ignition switch “OFF”.
2. Disconnect TCM harness connector.
3. Check continuity between TCM terminals 14 (B), 48 (B) and ground.

   Continuity should exist.

   If OK, check harness for short to ground and short to power.

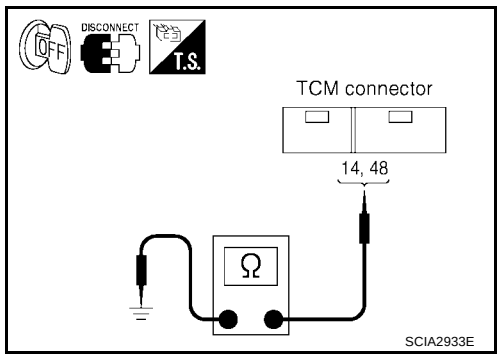

OK or NG

OK >> GO TO 4.
NG >> Repair open circuit or short to ground or short to power in harness or connectors.

4. CHECK DTC

Check again. Refer to AT-572, "DTC Confirmation Procedure" .

OK or NG

OK >> **INSPECTION END**
NG >> GO TO 5.

5. CHECK TCM

1. Check TCM input/output signal.
2. If NG, recheck TCM pin terminals for damage or loose connection with harness connector.

OK or NG

OK >> **INSPECTION END**
NG >> Repair or replace damaged parts.

Component Inspection

UCS000VJ

A/T PV IGN RELAY

1. Apply 12V direct current between A/T PV IGN relay terminals 1 and 2.
2. Check continuity between relay terminals 3 and 5.

Condition	Continuity
12V direct current supply between terminals 1 and 2	Yes
OFF	No

3. If NG, replace A/T PV IGN relay.

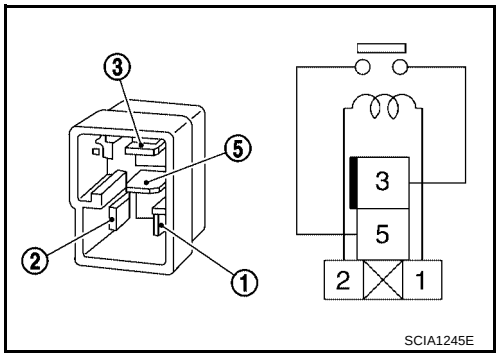

DTC P1726 ELECTRIC THROTTLE CONTROL SYSTEM

PFP:23710

Description

UCS000VZ

This DTC is displayed with other DTCs regarding ECM. Perform the trouble diagnosis for other DTCs displayed. Refer to EC-79, "TROUBLE DIAGNOSIS" .
When this DTC is detected, lock-up operation and learning control are canceled.

TROUBLE DIAGNOSIS FOR SYMPTOMS

PFP:00007

O/D OFF Indicator Lamp Does Not Come On

UCS002LO

SYMPTOM:

O/D OFF indicator lamp does not come on for about 2 seconds when turning ignition switch to “ON”.

DIAGNOSTIC PROCEDURE

1. CHECK CAN COMMUNICATION LINE

Perform the self-diagnosis.

Is a malfunction in the CAN communication indicated in the results?

YES >> Check the CAN communication line. Refer to AT-452, "DTC U1000 CAN COMMUNICATION LINE" .

NO >> GO TO 2.

2. CHECK TCM POWER SOURCE CIRCUIT

1. Turn ignition switch “ON”. (Do not start engine.)
2. Check voltage between TCM connector terminals and ground. Refer to AT-573, "Wiring Diagram — AT — PWR/IN" .

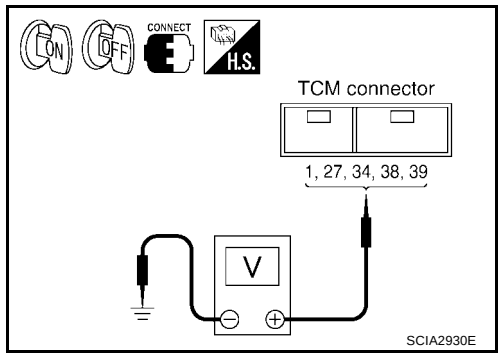

Connector	Terminal (Wire color)	Voltage (Approx.)
E143	1 (Y/W) - Ground	0 - 1.5V
E142	27 (Y/R) - Ground	Battery voltage
	34 (P) - Ground	
	38 (Y/B) - Ground	
	39 (Y/B) - Ground	

3. Turn ignition switch “OFF”.
4. Check voltage between TCM connector terminals and ground. Refer to AT-573, "Wiring Diagram — AT — PWR/IN" .

Connector	Terminal (Wire color)	Voltage (Approx.)
E143	1 (Y/W) - Ground	0V
E142	27 (Y/R) - Ground	Battery voltage
	34 (P) - Ground	0V
	38 (Y/B) - Ground	0V
	39 (Y/B) - Ground	0V

OK or NG

OK >> GO TO 4.

NG >> GO TO 3.

3. DETECT MALFUNCTIONING ITEM

Check the following:

- Harness for short or open between battery and TCM terminal 27
- Harness for short or open between ignition switch and TCM terminals 1, 34, 38 and 39
- 10A fuse [No. 19, located in the fuse block (J/B) or No. 48, located in the IPDM E/R]
- Ignition switch. Refer to PG-4, "POWER SUPPLY ROUTING CIRCUIT" .
- A/T PV IGN relay. Refer to AT-576, "Component Inspection" .

OK or NG

OK >> GO TO 4.

NG >> Repair or replace damaged parts.

4. CHECK TCM GROUND CIRCUIT

1. Turn ignition switch “OFF”.
2. Disconnect the TCM harness connector.
3. Check continuity between TCM terminals 14 (B), 48 (B) and ground. Refer to AT-573, "Wiring Diagram — AT — PWR/IN" .

   Continuity should exist.

4. If OK, check harness for short-circuit to ground or the power source.

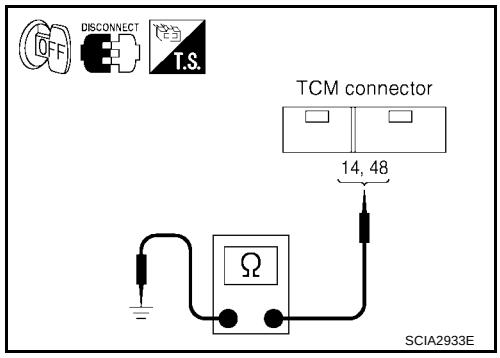

OK or NG

OK >> GO TO 5.
NG >> Repair open circuit or short to ground or short to power in harness or connectors.

5. CHECK O/D OFF INDICATOR LAMP CIRCUIT

1. Turn ignition switch “OFF”.
2. Check the combination meter.
   Refer to DI-5, "COMBINATION METERS" .

OK or NG

OK >> GO TO 6.
NG >> Replace the combination meter. Refer to DI-21, "Removal and Installation of Combination Meter" .

6. SYMPTOM CHECK

Check again.

OK or NG

OK >> **INSPECTION END**
NG >> GO TO 7.

7. CHECK TCM

1. Check TCM input/output signal.
2. If NG, recheck TCM pin terminals for damage or loose connection with harness connector.

OK or NG

OK >> **INSPECTION END**
NG >> Repair or replace damaged parts.

Engine Cannot Be Started In “P” or “N” Position

UCS002K6

SYMPTOM:

- **Engine cannot be started with selector lever in “P” or “N” position.**
- **Engine can be started with selector lever in “D”, “L” or “R” position.**

DIAGNOSTIC PROCEDURE

1. CHECK STARTING SYSTEM

Check starting system. Refer to SC-10, "STARTING SYSTEM" .

OK or NG

OK >> GO TO 2.
NG >> Repair or replace damaged parts.

2. CHECK CONTROL CABLE

Check the control cable.

- Refer to AT-610, "Control Cable Adjustment" .

OK or NG

OK >> GO TO 3.
NG >> Adjust control cable. Refer to AT-610, "Control Cable Adjustment" .

3. CHECK PNP SWITCH CIRCUIT

Perform self-diagnosis.

Do the self-diagnostic results indicate PNP switch?

YES >> Check the malfunctioning system. Refer to AT-459, "DTC P0705 PARK/NEUTRAL POSITION SWITCH" .
NO >> **INSPECTION END**

In “P” Position, Vehicle Moves When Pushed

UCS002K7

SYMPTOM:

Even though the selector lever is set in the “P” position, the parking mechanism is not actuated, allowing the vehicle to be moved when it is pushed.

DIAGNOSTIC PROCEDURE

1. CHECK PNP SWITCH CIRCUIT

Perform self-diagnosis.

Do the self-diagnostic results indicate PNP switch?

YES >> Check the malfunctioning system. Refer to AT-459, "DTC P0705 PARK/NEUTRAL POSITION SWITCH" .
NO >> GO TO 2.

2. CHECK CONTROL CABLE

Check the control cable.

- Refer to AT-610, "Control Cable Adjustment" .

OK or NG

OK >> GO TO 3.
NG >> Adjust control cable. Refer to AT-610, "Control Cable Adjustment" .

3. SYMPTOM CHECK

Check again.

OK or NG

OK >> **INSPECTION END**
NG >> Repair or replace damaged parts.

In “N” Position, Vehicle Moves

UCS002K8

SYMPTOM:

Vehicle moves forward or backward when selecting “N” position.

DIAGNOSTIC PROCEDURE

1. CHECK A/T FLUID LEVEL

Check the A/T fluid level. Refer to AT-422, "A/T FLUID CHECK" .

OK or NG

OK >> GO TO 2.
NG >> Refill ATF.

2. CHECK PNP SWITCH CIRCUIT

Perform self-diagnosis.

Do the self-diagnostic results indicate PNP switch?

YES >> Check the malfunctioning system. Refer to AT-459, "DTC P0705 PARK/NEUTRAL POSITION SWITCH" .
NO >> GO TO 3.

3. CHECK CONTROL CABLE

Check the control cable.

- Refer to AT-610, "Control Cable Adjustment" .

OK or NG

OK >> GO TO 3.
NG >> Adjust control cable. Refer to AT-610, "Control Cable Adjustment" .

4. CHECK SYMPTOM

Check again.

OK or NG

OK >> **INSPECTION END**
NG >> GO TO 4.

5. CHECK TCM

1. Check TCM input/output signal. Refer to AT-439, "TCM Input/Output Signal Reference Values" .
2. If NG, recheck TCM pin terminals for damage or loose connection with harness connector.

OK or NG

OK >> **INSPECTION END**
NG >> Repair or replace damaged parts.

Large Shock (“N” to “D” Position)

UCS002K9

SYMPTOM:

A noticeable shock occurs when the selector lever is shifted from the “N” to “D” position.

DIAGNOSTIC PROCEDURE

1. CHECK A/T FLUID LEVEL

Check the A/T fluid level. Refer to AT-422, "A/T FLUID CHECK" .

OK or NG

OK >> GO TO 2.
NG >> Refill ATF.

2. CHECK SELF-DIAGNOSTIC RESULTS

Perform self-diagnosis.

Is any malfunction detected by self-diagnostic?

YES >> Check the malfunctioning system.
NO >> GO TO 3.

3. DETECT MALFUNCTIONING ITEM

1. Control valve assembly. Refer to AT-611, "Control Valve Assembly" .
2. Disassemble A/T. Refer to AT-628, "DISASSEMBLY" .
3. Check the following items:

- Accumulator. Refer to AT-628, "DISASSEMBLY" .
- Forward and direct clutch assembly. Refer to AT-628, "DISASSEMBLY" .

OK or NG

OK >> GO TO 4.
NG >> Repair or replace damaged parts.

4. CHECK TCM

1. Check TCM input/output signal. Refer to AT-439, "TCM Input/Output Signal Reference Values" .
2. If NG, recheck TCM pin terminals for damage or loose connection with harness connector.

OK or NG

OK >> GO TO 5.
NG >> Repair or replace damaged parts.

5. CHECK SYMPTOM

Check again.

OK or NG

OK >> **INSPECTION END**
NG >> Repair or replace damaged parts.

Vehicle Does Not Creep Backward In “R” Position

UCS002KA

SYMPTOM:

The vehicle does not creep in the “R” position. Or an extreme lack of acceleration is observed.

DIAGNOSTIC PROCEDURE

1. CHECK A/T FLUID LEVEL

Check the A/T fluid level. Refer to AT-422, "A/T FLUID CHECK" .

OK or NG

OK >> GO TO 2.
NG >> Refill ATF.

2. CHECK CONTROL CABLE AND PNP SWITCH POSITION

Check the control cable and PNP switch position.

- Refer to AT-610, "Control Cable Adjustment" .

OK or NG

OK >> GO TO 3.
NG >> Adjust control cable and PNP switch position. Refer to AT-610, "Control Cable Adjustment" or AT-608, "Park/Neutral Position (PNP) Switch Adjustment" .

3. CHECK SELF-DIAGNOSTIC RESULTS

Perform self-diagnosis.

Is any malfunction detected by self-diagnostic?

YES >> Check the malfunctioning system.
NO >> GO TO 4.

4. DETECT MALFUNCTIONING ITEM

1. Control valve assembly. Refer to AT-611, "Control Valve Assembly" .
2. Disassemble A/T. Refer to AT-628, "DISASSEMBLY" .
3. Check the following items:

- Forward and direct clutch assembly. Refer to AT-628, "DISASSEMBLY" .
- 1st and reverse brake. Refer to AT-628, "DISASSEMBLY" .
- B5 brake. Refer to AT-657, "Transaxle Case Cover & B5 Brake" .
- Torque convertor. Refer to AT-628, "DISASSEMBLY" .

OK or NG

OK >> GO TO 5.
NG >> Repair or replace damaged parts.

5. CHECK TCM

1. Check TCM input/output signal. Refer to AT-439, "TCM Input/Output Signal Reference Values" .
2. If NG, recheck TCM pin terminals for damage or loose connection with harness connector.

OK or NG

OK >> GO TO 6.
NG >> Repair or replace damaged parts.

6. CHECK SYMPTOM

Check again.

OK or NG

OK >> **INSPECTION END**
NG >> Repair or replace damaged parts.

Vehicle Does Not Creep Forward In “D” or “L” Position

UCS002KB

SYMPTOM:

Vehicle does not creep forward when selecting “D” or “L” position.

DIAGNOSTIC PROCEDURE

1. CHECK A/T FLUID LEVEL

Check the A/T fluid level. Refer to AT-422, "A/T FLUID CHECK" .

OK or NG

OK >> GO TO 2.
NG >> Refill ATF.

2. CHECK CONTROL CABLE AND PNP SWITCH POSITION

Check the control cable and PNP switch position.

- Refer to AT-610, "Control Cable Adjustment" .

OK or NG

OK >> GO TO 3.
NG >> Adjust control cable and PNP switch position. Refer to AT-610, "Control Cable Adjustment" or AT-608, "Park/Neutral Position (PNP) Switch Adjustment" .

3. CHECK PRESSURE CONTROL SOLENOID VALVE A CIRCUIT

Perform self-diagnosis.

Do the self-diagnostic results indicate pressure control solenoid valve A?

YES >> Check the malfunctioning system. Refer to AT-514, "DTC P0745 PRESSURE CONTROL SOLENOID VALVE A (LINE PRESSURE)" .
NO >> GO TO 4.

4. DETECT MALFUNCTIONING ITEM

1. Control valve assembly. Refer to AT-611, "Control Valve Assembly" .
2. Disassemble A/T. Refer to AT-628, "DISASSEMBLY" .
3. Check the following items:

- Forward and direct clutch assembly. Refer to AT-628, "DISASSEMBLY" .
- One-way clutch No.2. Refer to AT-628, "DISASSEMBLY" .
- B5 brake. Refer to AT-657, "Transaxle Case Cover & B5 Brake" .
- Torque convertor. Refer to AT-628, "DISASSEMBLY" .

OK or NG

OK >> GO TO 5.
NG >> Repair or replace damaged parts.

5. CHECK TCM

1. Check TCM input/output signal. Refer to AT-439, "TCM Input/Output Signal Reference Values" .
2. If NG, recheck TCM pin terminals for damage or loose connection with harness connector.

OK or NG

OK >> GO TO 6.
NG >> Repair or replace damaged parts.

6. CHECK SYMPTOM

Check again.

OK or NG

OK >> **INSPECTION END**
NG >> Repair or replace damaged parts.

Vehicle Cannot Be Started From D1

UCS002KC

SYMPTOM:

Vehicle cannot be started from D1 on cruise test - Part 1.

DIAGNOSTIC PROCEDURE

1. CONFIRM THE SYMPTOM

Check if vehicle creeps in “R” position.

OK or NG

OK >> GO TO 2.
NG >> Refer to AT-583, "Vehicle Does Not Creep Backward In “R” Position" .

2. CHECK SELF-DIAGNOSTIC RESULTS

Perform self-diagnosis.

Is any malfunction detected by self-diagnostic?

YES >> Check the malfunctioning system.
NO >> GO TO 3.

3. CHECK LINE PRESSURE

Check the line pressure at the engine stall point. Refer to AT-424, "LINE PRESSURE TEST" .

OK or NG

OK >> GO TO 4.
NG >> Check the malfunctioning item. Refer to AT-425, "Judgement of line pressure test" .

4. DETECT MALFUNCTIONING ITEM

1. Control valve assembly. Refer to AT-611, "Control Valve Assembly" .
2. Disassemble A/T. Refer to AT-628, "DISASSEMBLY" .
3. Check the following items:

- Forward and direct clutch assembly. Refer to AT-628, "DISASSEMBLY" .
- One-way clutch No.2. Refer to AT-628, "DISASSEMBLY" .
- B5 brake. Refer to AT-657, "Transaxle Case Cover & B5 Brake" .

OK or NG

OK >> GO TO 5.
NG >> Repair or replace damaged parts.

5. CHECK TCM

1. Check TCM input/output signal. Refer to AT-439, "TCM Input/Output Signal Reference Values" .
2. If NG, recheck TCM pin terminals for damage or loose connection with harness connector.

OK or NG

OK >> GO TO 6.
NG >> Repair or replace damaged parts.

6. CHECK SYMPTOM

Check again.

OK or NG

OK >> **INSPECTION END**
NG >> Repair or replace damaged parts.

A/T Does Not Shift: D1 → D2

UCS002KD

SYMPTOM:

The vehicle does not shift-up from the D1 to D2 gear at the specified speed.

DIAGNOSTIC PROCEDURE

1. CONFIRM THE SYMPTOM

Check if vehicle creeps forward in “D” or “L” position and vehicle can be started from D_1.

OK or NG

OK >> GO TO 2.
NG >> Refer to AT-584, "Vehicle Does Not Creep Forward In “D” or “L” Position" , AT-585, "Vehicle Cannot Be Started From D_1" .

2. CHECK A/T FLUID LEVEL

Check the A/T fluid level. Refer to AT-422, "A/T FLUID CHECK" .

OK or NG

OK >> GO TO 3.
NG >> Refill ATF.

3. CHECK SELF-DIAGNOSTIC RESULTS

Perform self-diagnosis.

Is any malfunction detected by self-diagnostic?

YES >> Check the malfunctioning system.
NO >> GO TO 4.

4. DETECT MALFUNCTIONING ITEM

1. Control valve assembly. Refer to AT-611, "Control Valve Assembly" .
2. Disassemble A/T. Refer to AT-628, "DISASSEMBLY" .
3. Check the following items:

- One-way clutch No.1. Refer to AT-654, "One-Way Clutch Outer Race Sub Assembly & 2nd Coast Brake Hub & One-Way Clutch No.1" .
- One-way clutch No.2. Refer to AT-628, "DISASSEMBLY" .
- 2nd coast brake. Refer to AT-648, "Oil Pump, 2nd Coast Brake & 2nd Brake" , AT-654, "One-Way Clutch Outer Race Sub Assembly & 2nd Coast Brake Hub & One-Way Clutch No.1" .
- 2nd brake. Refer to AT-648, "Oil Pump, 2nd Coast Brake & 2nd Brake" .

OK or NG

OK >> GO TO 5.
NG >> Repair or replace damaged parts.

5. CHECK TCM

1. Check TCM input/output signal. Refer to AT-439, "TCM Input/Output Signal Reference Values" .
2. If NG, recheck TCM pin terminals for damage or loose connection with harness connector.

OK or NG

OK >> GO TO 6.
NG >> Repair or replace damaged parts.

6. CHECK SYMPTOM

Check again.

OK or NG

OK >> **INSPECTION END**
NG >> Repair or replace damaged parts.

A/T Does Not Shift: $D_2 \rightarrow D_3$

UCS002KE

SYMPTOM:

The vehicle does not shift-up from D_2 to D_3 gear at the specified speed.

DIAGNOSTIC PROCEDURE

1. CONFIRM THE SYMPTOM

Check if vehicle creeps forward in “D” or “L” position and vehicle can be started from D_1.

OK or NG

OK >> GO TO 2.
NG >> Refer to AT-584, "Vehicle Does Not Creep Forward In “D” or “L” Position" ,AT-585, "Vehicle Cannot Be Started From D_1" .

2. CHECK A/T FLUID LEVEL

Check the A/T fluid level. Refer to AT-422, "A/T FLUID CHECK" .

OK or NG

OK >> GO TO 3.
NG >> Refill ATF.

3. CHECK SELF-DIAGNOSTIC RESULTS

Perform self-diagnosis.

Is any malfunction detected by self-diagnostic?

YES >> Check the malfunctioning system.
NO >> GO TO 4.

4. DETECT MALFUNCTIONING ITEM

1. Control valve assembly. Refer to AT-611, "Control Valve Assembly" .
2. Disassemble A/T. Refer to AT-628, "DISASSEMBLY" .
3. Check the following items:

- U/D brake. Refer to AT-628, "DISASSEMBLY" .
- B5 brake. Refer to AT-657, "Transaxle Case Cover & B5 Brake" .

OK or NG

OK >> GO TO 5.
NG >> Repair or replace damaged parts.

5. CHECK TCM

1. Check TCM input/output signal. Refer to AT-439, "TCM Input/Output Signal Reference Values" .
2. If NG, recheck TCM pin terminals for damage or loose connection with harness connector.

OK or NG

OK >> GO TO 6.
NG >> Repair or replace damaged parts.

6. CHECK SYMPTOM

Check again.

OK or NG

OK >> **INSPECTION END**
NG >> Repair or replace damaged parts.

A/T Does Not Shift: $D_3 \rightarrow D_4$

UCS002KF

SYMPTOM:

- **The vehicle does not shift-up from the D_3 to D_4 gear at the specified speed.**
- **The vehicle does not shift-up from the D_3 to D_4 gear unless A/T is warmed up.**

DIAGNOSTIC PROCEDURE

1. CONFIRM THE SYMPTOM

Check if vehicle creeps forward in “D” or “L” position and vehicle can be started from D_1.

OK or NG

OK >> GO TO 2.
NG >> Refer to AT-584, "Vehicle Does Not Creep Forward In “D” or “L” Position" , AT-585, "Vehicle Cannot Be Started From D_1" .

2. CHECK A/T FLUID LEVEL

Check the A/T fluid level. Refer to AT-422, "A/T FLUID CHECK" .

OK or NG

OK >> GO TO 3.
NG >> Refill ATF.

3. CHECK SELF-DIAGNOSTIC RESULTS

Perform self-diagnosis.

Is any malfunction detected by self-diagnostic?

YES >> Check the malfunctioning system.
NO >> GO TO 4.

4. DETECT MALFUNCTIONING ITEM

1. Control valve assembly. Refer to AT-611, "Control Valve Assembly" .
2. Disassemble A/T. Refer to AT-628, "DISASSEMBLY" .
3. Check the following items:

- U/D brake. Refer to AT-628, "DISASSEMBLY" .
- U/D clutch. Refer to AT-628, "DISASSEMBLY" .

OK or NG

OK >> GO TO 6.
NG >> Repair or replace damaged parts.

5. CHECK TCM

1. Check TCM input/output signal. Refer to AT-439, "TCM Input/Output Signal Reference Values" .
2. If NG, recheck TCM pin terminals for damage or loose connection with harness connector.

OK or NG

OK >> GO TO 5.
NG >> Repair or replace damaged parts.

6. CHECK SYMPTOM

Check again.

OK or NG

OK >> **INSPECTION END**
NG >> Repair or replace damaged parts.

A/T Does Not Shift: $D_4 \rightarrow D_5$

UCS002KG

SYMPTOM:

- **The vehicle does not shift-up from the D_4 to D_5 gear at the specified speed.**
- **The vehicle does not shift-up from the D_4 to D_5 gear unless A/T is warmed up.**

DIAGNOSTIC PROCEDURE

1. CONFIRM THE SYMPTOM

Check if vehicle creeps forward in “D” or “L” position and vehicle can be started from D1.

OK or NG

OK >> GO TO 2.
NG >> Refer to AT-584, "Vehicle Does Not Creep Forward In “D” or “L” Position" ,AT-585, "Vehicle Cannot Be Started From D1" .

2. CHECK A/T FLUID LEVEL

Check the A/T fluid level. Refer to AT-422, "A/T FLUID CHECK" .

OK or NG

OK >> GO TO 3.
NG >> Refill ATF.

3. CHECK SELF-DIAGNOSTIC RESULTS

Perform self-diagnosis.

Is any malfunction detected by self-diagnostic?

YES >> Check the malfunctioning system.
NO >> GO TO 4.

4. DETECT MALFUNCTIONING ITEM

1. Control valve assembly. Refer to AT-611, "Control Valve Assembly" .
2. Disassemble A/T. Refer to AT-628, "DISASSEMBLY" .
3. Check the following items:

- Forward and direct clutch assembly. Refer to AT-628, "DISASSEMBLY" .
- 2nd coast brake. Refer to AT-648, "Oil Pump, 2nd Coast Brake & 2nd Brake" , AT-654, "One-Way Clutch Outer Race Sub Assembly & 2nd Coast Brake Hub & One-Way Clutch No.1" .
- One-way clutch No.1. Refer to AT-654, "One-Way Clutch Outer Race Sub Assembly & 2nd Coast Brake Hub & One-Way Clutch No.1" .

OK or NG

OK >> GO TO 5.
NG >> Repair or replace damaged parts.

5. CHECK TCM

1. Check TCM input/output signal. Refer to AT-439, "TCM Input/Output Signal Reference Values" .
2. If NG, recheck TCM pin terminals for damage or loose connection with harness connector.

OK or NG

OK >> GO TO 6.
NG >> Repair or replace damaged parts.

6. CHECK SYMPTOM

Check again.

OK or NG

OK >> **INSPECTION END**
NG >> Repair or replace damaged parts.

A/T Does Not Perform Lock-up

UCS002KH

SYMPTOM:

A/T does not perform lock-up at the specified speed.

DIAGNOSTIC PROCEDURE

1. CHECK A/T FLUID LEVEL

Check the A/T fluid level. Refer to AT-422, "A/T FLUID CHECK" .

OK or NG

OK >> GO TO 2.
NG >> Refill ATF.

2. CHECK STOP LAMP SWITCH CIRCUIT

Check the stop lamp switch circuit. Refer to BRC-11, "TROUBLE DIAGNOSIS" (with TCS/ABS) or BRC-55, "TROUBLE DIAGNOSIS" (with VDC/TCS/ABS).

OK or NG

OK >> GO TO 3.
NG >> Repair or replace damaged parts.

3. CHECK SELF-DIAGNOSTIC RESULTS

Perform self-diagnosis.

Is any malfunction detected by self-diagnostic?

YES >> Check the malfunctioning system.
NO >> GO TO 4.

4. DETECT MALFUNCTIONING ITEM

1. Control valve assembly. Refer to AT-611, "Control Valve Assembly" .
2. Disassemble A/T. Refer to AT-628, "DISASSEMBLY" .
3. Check the following items:

– Torque converter. Refer to AT-628, "DISASSEMBLY" .

OK or NG

OK >> GO TO 5.
NG >> Repair or replace damaged parts.

5. CHECK TCM

1. Check TCM input/output signal. Refer to AT-439, "TCM Input/Output Signal Reference Values" .
2. If NG, recheck TCM pin terminals for damage or loose connection with harness connector.

OK or NG

OK >> GO TO 6.
NG >> Repair or replace damaged parts.

6. CHECK SYMPTOM

Check again.

OK or NG

OK >> **INSPECTION END**
NG >> Repair or replace damaged parts.

A/T Does Not Hold Lock-up Condition

UCS002KI

SYMPTOM:

The lock-up condition cannot be maintained for more than 30 seconds.

DIAGNOSTIC PROCEDURE

1. CHECK A/T FLUID LEVEL

Check the A/T fluid level. Refer to AT-422, "A/T FLUID CHECK" .

OK or NG

OK >> GO TO 2.
NG >> Refill ATF.

2. CHECK STOP LAMP SWITCH CIRCUIT

Check the stop lamp switch circuit. Refer to BRC-11, "TROUBLE DIAGNOSIS" (with TCS/ABS) or BRC-55, "TROUBLE DIAGNOSIS" (with VDC/TCS/ABS).

OK or NG

OK >> GO TO 3.
NG >> Repair or replace damaged parts.

3. CHECK SELF-DIAGNOSTIC RESULTS

Perform self-diagnosis.

Is any malfunction detected by self-diagnostic?

YES >> Check the malfunctioning system.
NO >> GO TO 4.

4. DETECT MALFUNCTIONING ITEM

1. Control valve assembly. Refer to AT-611, "Control Valve Assembly" .
2. Disassemble A/T. Refer to AT-628, "DISASSEMBLY" .
3. Check the following items:

– Torque converter. Refer to AT-628, "DISASSEMBLY" .

OK or NG

OK >> GO TO 5.
NG >> Repair or replace damaged parts.

5. CHECK TCM

1. Check TCM input/output signal. Refer to AT-439, "TCM Input/Output Signal Reference Values" .
2. If NG, recheck TCM pin terminals for damage or loose connection with harness connector.

OK or NG

OK >> GO TO 6.
NG >> Repair or replace damaged parts.

6. CHECK SYMPTOM

Check again.

OK or NG

OK >> **INSPECTION END**
NG >> Repair or replace damaged parts.

Lock-up Is Not Released

UCS002KJ

SYMPTOM:

The lock-up condition cannot be cancelled even after releasing the accelerator pedal.

DIAGNOSTIC PROCEDURE

1. CHECK A/T FLUID LEVEL

Check the A/T fluid level. Refer to AT-422, "A/T FLUID CHECK" .

OK or NG

OK >> GO TO 2.
NG >> Refill ATF.

2. CHECK STOP LAMP SWITCH CIRCUIT

Check the stop lamp switch circuit. Refer to BRC-11, "TROUBLE DIAGNOSIS" (with TCS/ABS) or BRC-55, "TROUBLE DIAGNOSIS" (with VDC/TCS/ABS).

OK or NG

OK >> GO TO 3.
NG >> Repair or replace damaged parts.

3. CHECK SELF-DIAGNOSTIC RESULTS

Perform self-diagnosis.

Is any malfunction detected by self-diagnostic?

YES >> Check the malfunctioning system.
NO >> GO TO 4.

4. DETECT MALFUNCTIONING ITEM

1. Control valve assembly. Refer to AT-611, "Control Valve Assembly" .
2. Disassemble A/T. Refer to AT-628, "DISASSEMBLY" .
3. Check the following items:

– Torque converter. Refer to AT-628, "DISASSEMBLY" .

OK or NG

OK >> GO TO 5.
NG >> Repair or replace damaged parts.

5. CHECK TCM

1. Check TCM input/output signal. Refer to AT-439, "TCM Input/Output Signal Reference Values" .
2. If NG, recheck TCM pin terminals for damage or loose connection with harness connector.

OK or NG

OK >> GO TO 6.
NG >> Repair or replace damaged parts.

6. CHECK SYMPTOM

Check again.

OK or NG

OK >> **INSPECTION END**
NG >> Repair or replace damaged parts.

A/T Does Not Shift: 5th gear → 4th gear, When Lever Switch “OFF” → “ON” UCS002KL

SYMPTOM:

A/T does not shift from D_5 to D_4 , when pushed lever switch to “ON” position. (O/D OFF indicator lamp “ON” and A/T indicator “4”.)

DIAGNOSTIC PROCEDURE

1. CHECK A/T FLUID LEVEL

Check the A/T fluid level. Refer to AT-422, "A/T FLUID CHECK" .

OK or NG

OK >> GO TO 2.
NG >> Refill ATF.

2. CHECK SELF-DIAGNOSTIC RESULTS

Perform self-diagnosis.

Is any malfunction detected by self-diagnostic?

YES >> Check the malfunctioning system.
NO >> GO TO 3.

3. DETECT MALFUNCTIONING ITEM

1. Control valve assembly. Refer to AT-611, "Control Valve Assembly" .
2. Disassemble A/T. Refer to AT-628, "DISASSEMBLY" .
3. Check the following items:

- Forward and direct clutch assembly. Refer to AT-628, "DISASSEMBLY" .
- 2nd coast brake. Refer to AT-648, "Oil Pump, 2nd Coast Brake & 2nd Brake" , AT-654, "One-Way Clutch Outer Race Sub Assembly & 2nd Coast Brake Hub & One-Way Clutch No.1" .
- One-way clutch No.1. Refer to AT-654, "One-Way Clutch Outer Race Sub Assembly & 2nd Coast Brake Hub & One-Way Clutch No.1" .

OK or NG

OK >> GO TO 4.
NG >> Repair or replace damaged parts.

4. CHECK TCM

1. Check TCM input/output signal. Refer to AT-439, "TCM Input/Output Signal Reference Values" .
2. If NG, recheck TCM pin terminals for damage or loose connection with harness connector.

OK or NG

OK >> GO TO 5.
NG >> Repair or replace damaged parts.

5. CHECK SYMPTOM

Check again.

OK or NG

OK >> **INSPECTION END**
NG >> Repair or replace damaged parts.

A/T Does Not Shift: 4th gear → 3rd gear, When Selector Lever “D” → “L” Position

UCS002KM

SYMPTOM:

A/T does not shift from D_4 to L_3 , when changed selector lever from “D” to “L” position. (A/T indicator “3”.)

DIAGNOSTIC PROCEDURE

1. CHECK A/T FLUID LEVEL

Check the A/T fluid level. Refer to AT-422, "A/T FLUID CHECK" .

OK or NG

OK >> GO TO 2.
NG >> Refill ATF.

2. CHECK SELF-DIAGNOSTIC RESULTS

Perform self-diagnosis.

Is any malfunction detected by self-diagnostic?

YES >> Check the malfunctioning system.
NO >> GO TO 3.

3. DETECT MALFUNCTIONING ITEM

1. Control valve assembly. Refer to AT-611, "Control Valve Assembly" .
2. Disassemble A/T. Refer to AT-628, "DISASSEMBLY" .
3. Check the following items:

- U/D clutch. Refer to AT-628, "DISASSEMBLY" .
- U/D brake. Refer to AT-628, "DISASSEMBLY" .

OK or NG

OK >> GO TO 4.
NG >> Repair or replace damaged parts.

4. CHECK TCM

1. Check TCM input/output signal. Refer to AT-439, "TCM Input/Output Signal Reference Values" .
2. If NG, recheck TCM pin terminals for damage or loose connection with harness connector.

OK or NG

OK >> GO TO 5.
NG >> Repair or replace damaged parts.

5. CHECK SYMPTOM

Check again.

OK or NG

OK >> **INSPECTION END**
NG >> Repair or replace damaged parts.

A/T Does Not Shift: 3rd gear → 2nd gear, When Lever Switch “OFF” → “ON”

UCS002KN

SYMPTOM:

A/T does not shift from L_3 to L_2, when pushed lever switch to “ON” position. (A/T indicator “2”.)

DIAGNOSTIC PROCEDURE

1. CHECK A/T FLUID LEVEL

Check the A/T fluid level. Refer to AT-422, "A/T FLUID CHECK" .

OK or NG

OK >> GO TO 2.
NG >> Refill ATF.

2. CHECK SELF-DIAGNOSTIC RESULTS

Perform self-diagnosis.

Is any malfunction detected by self-diagnostic?

YES >> Check the malfunctioning system.
NO >> GO TO 3.

3. DETECT MALFUNCTIONING ITEM

1. Control valve assembly. Refer to AT-611, "Control Valve Assembly" .
2. Disassemble A/T. Refer to AT-628, "DISASSEMBLY" .
3. Check the following items:

- U/D brake. Refer to AT-628, "DISASSEMBLY" .
- B5 brake. Refer to AT-657, "Transaxle Case Cover & B5 Brake" .

OK or NG

OK >> GO TO 4.
NG >> Repair or replace damaged parts.

4. CHECK TCM

1. Check TCM input/output signal. Refer to AT-439, "TCM Input/Output Signal Reference Values" .
2. If NG, recheck TCM pin terminals for damage or loose connection with harness connector.

OK or NG

OK >> GO TO 5.
NG >> Repair or replace damaged parts.

5. CHECK SYMPTOM

Check again.

OK or NG

OK >> **INSPECTION END**
NG >> Repair or replace damaged parts.

A/T Does Not Shift: 2nd gear → 1st gear, When Release Accelerator Pedal

UCS002KO

SYMPTOM:

A/T does not shift from L_2 to L_1, when releasing accelerator pedal.

DIAGNOSTIC PROCEDURE

1. CHECK A/T FLUID LEVEL

Check the A/T fluid level. Refer to AT-422, "A/T FLUID CHECK" .

OK or NG

OK >> GO TO 2.
NG >> Refill ATF.

2. CHECK SELF-DIAGNOSTIC RESULTS

Perform self-diagnosis.

Is any malfunction detected by self-diagnostic?

YES >> Check the malfunctioning system.
NO >> GO TO 3.

3. DETECT MALFUNCTIONING ITEM

1. Control valve assembly. Refer to AT-611, "Control Valve Assembly" .
2. Disassemble A/T. Refer to AT-628, "DISASSEMBLY" .
3. Check the following items:

- 2nd coast brake. Refer to AT-648, "Oil Pump, 2nd Coast Brake & 2nd Brake" , AT-654, "One-Way Clutch Outer Race Sub Assembly & 2nd Coast Brake Hub & One-Way Clutch No.1" .
- 2nd brake. Refer to AT-648, "Oil Pump, 2nd Coast Brake & 2nd Brake" .
- One-way clutch No.1. Refer to AT-654, "One-Way Clutch Outer Race Sub Assembly & 2nd Coast Brake Hub & One-Way Clutch No.1" .
- One-way clutch No.2. Refer to AT-628, "DISASSEMBLY" .

OK or NG

OK >> GO TO 4.
NG >> Repair or replace damaged parts.

4. CHECK TCM

1. Check TCM input/output signal. Refer to AT-439, "TCM Input/Output Signal Reference Values" .
2. If NG, recheck TCM pin terminals for damage or loose connection with harness connector.

OK or NG

OK >> GO TO 5.
NG >> Repair or replace damaged parts.

5. CHECK SYMPTOM

Check again.

OK or NG

OK >> **INSPECTION END**
NG >> Repair or replace damaged parts.

Vehicle Does Not Decelerate By Engine Brake

UCS002KP

SYMPTOM:

No engine brake is applied when the gear is shifted from the 2nd to 1st gear in “L” position.

DIAGNOSTIC PROCEDURE

1. CHECK A/T FLUID LEVEL

Check the A/T fluid level. Refer to AT-422, "A/T FLUID CHECK" .

OK or NG

OK >> GO TO 2.
NG >> Refill ATF.

2. CHECK SELF-DIAGNOSTIC RESULTS

Perform self-diagnosis.

Do the self-diagnostic results indicate shift solenoid valve E, electric throttle control system?

YES >> Check the malfunctioning system. Refer to AT-544, "DTC P0770 SHIFT SOLENOID VALVE E" , AT-577, "DTC P1726 ELECTRIC THROTTLE CONTROL SYSTEM" .
NO >> GO TO 3.

3. DETECT MALFUNCTIONING ITEM

1. Control valve assembly. Refer to AT-611, "Control Valve Assembly" .
2. Disassemble A/T. Refer to AT-628, "DISASSEMBLY" .
3. Check the following items:

- 2nd coast brake. Refer to AT-648, "Oil Pump, 2nd Coast Brake & 2nd Brake" , AT-654, "One-Way Clutch Outer Race Sub Assembly & 2nd Coast Brake Hub & One-Way Clutch No.1" .
- U/D brake. Refer to AT-628, "DISASSEMBLY" .
- B5 brake. Refer to AT-657, "Transaxle Case Cover & B5 Brake" .

OK or NG

OK >> GO TO 4.
NG >> Repair or replace damaged parts.

4. CHECK TCM

1. Check TCM input/output signal. Refer to AT-439, "TCM Input/Output Signal Reference Values" .
2. If NG, recheck TCM pin terminals for damage or loose connection with harness connector.

OK or NG

OK >> GO TO 5.
NG >> Repair or replace damaged parts.

5. CHECK SYMPTOM

Check again.

OK or NG

OK >> **INSPECTION END**
NG >> Repair or replace damaged parts.

TCM Self-diagnosis Does Not Activate

UCS002KQ

SYMPTOM:
O/D OFF indicator lamp does not come on in TCM self-diagnostic procedure even if the lamp circuit is good.

DESCRIPTION

- **Park/neutral position (PNP) switch**
  The park/neutral (PNP) switch assembly includes a transmission range switch. The transmission range switch detects the selector lever position and sends a signal to the TCM.
- **Stop lamp switch signal**
  Detects the brake pedal state (stop lamp switch is ON or OFF) and sends a signal via CAN communication line to the TCM.
- **Closed throttle position signal**
  ECM judges throttle opening based on a signal from accelerator pedal position sensor, and sends the signal via CAN communication line to TCM.

DIAGNOSTIC PROCEDURE

1. CHECK PARK/ NEUTRAL POSITION (PNP) SWITCH CIRCUIT

Check the park/neutral position (PNP) switch circuit. Refer to AT-459, "DTC P0705 PARK/NEUTRAL POSITION SWITCH" .

OK or NG

OK >> GO TO 2.
NG >> Repair or replace damaged parts.

2. CHECK STOP LAMP SWITCH CIRCUIT

Check the stop lamp switch circuit. Refer to BRC-11, "TROUBLE DIAGNOSIS" (with TCS/ABS) or BRC-55, "TROUBLE DIAGNOSIS" (with VDC/TCS/ABS).

OK or NG

OK >> GO TO 3.
NG >> Repair or replace damaged parts.

3. CHECK CLOSED THROTTLE POSITION SIGNAL CIRCUIT

Perform self-diagnosis for ECM. Refer to EC-55, "Emission-related Diagnostic Information" .

OK or NG

OK >> GO TO 4.
NG >> Repair or replace damaged parts.

4. CHECK DATA MONITOR (WITH CONSULT-II)

With CONSULT-II

1. Turn ignition switch “ON”. (Do not start engine.)
2. Select “TRANSMISSION” with “DATA MONITOR” mode in CONSULT-II.
3. Depress or release accelerator pedal and read out ON/OFF signaling action of the “CLSD THL POS”.
4. Depress or release brake pedal and read out ON/OFF signaling action of the “BRAKE SW”.

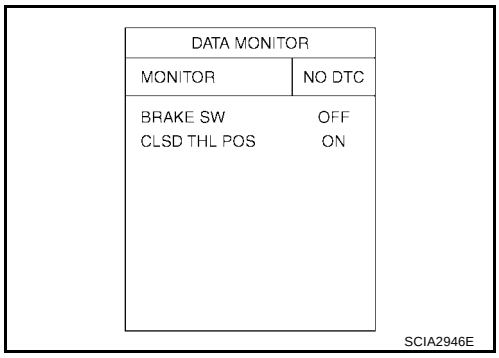

OK or NG

OK >> GO TO 7.
NG >> GO TO 5.

5. CHECK TCM

1. Check TCM input/output signal. Refer to AT-439, "TCM Input/Output Signal Reference Values" .
2. If NG, recheck TCM pin terminals for damage or loose connection with harness connector.

OK or NG

OK >> GO TO 6.
NG >> Repair or replace damaged parts.

6. CHECK CAN COMMUNICATION LINE

Check the CAN communication line. Refer to AT-452, "DTC U1000 CAN COMMUNICATION LINE" .

OK or NG

OK >> GO TO 7.
NG >> Repair or replace damaged parts.

7. CHECK SYMPTOM

Check again.

OK or NG

OK >> **INSPECTION END**
NG >> Replace the TCM.

A/T SHIFT LOCK SYSTEM

PFP:34950

Description

UCS001ED

- The mechanical key interlock mechanism also operates as a shift lock:
  With the ignition switch turned to ON, the selector lever cannot be shifted from “P” (parking) to any other position unless the brake pedal is depressed.
  With the key removed, the selector lever cannot be shifted from “P” to any other position.
  The key cannot be removed unless the selector lever is placed in “P”.
- The shift lock and key interlock mechanisms are controlled by the ON-OFF operation of the shift lock solenoid and by the operation of the rotator and slider located inside the key cylinder.

Shift Lock System Electrical Parts Location

UCS001EE

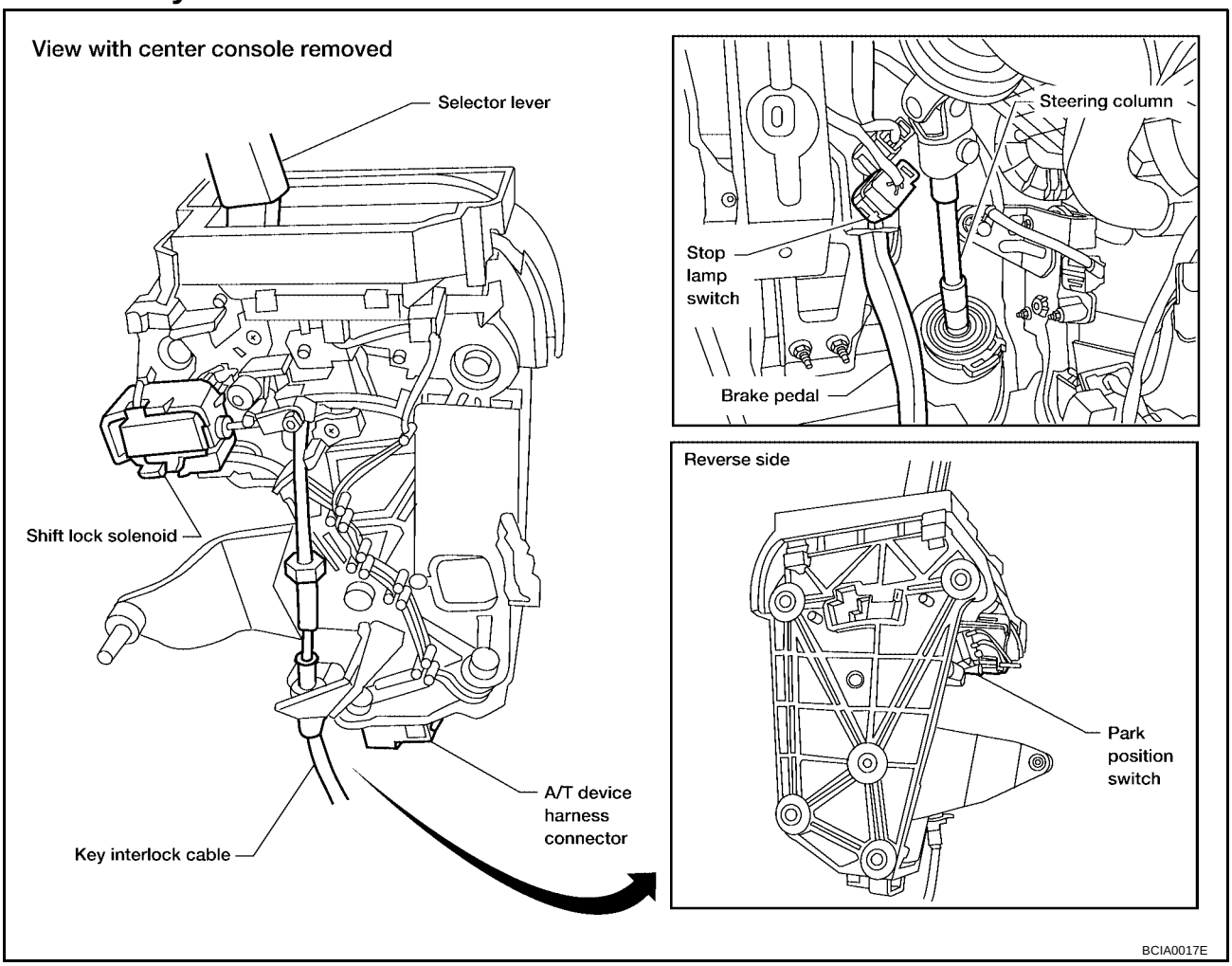

Wiring Diagram — AT — SHIFT

UCS001EF

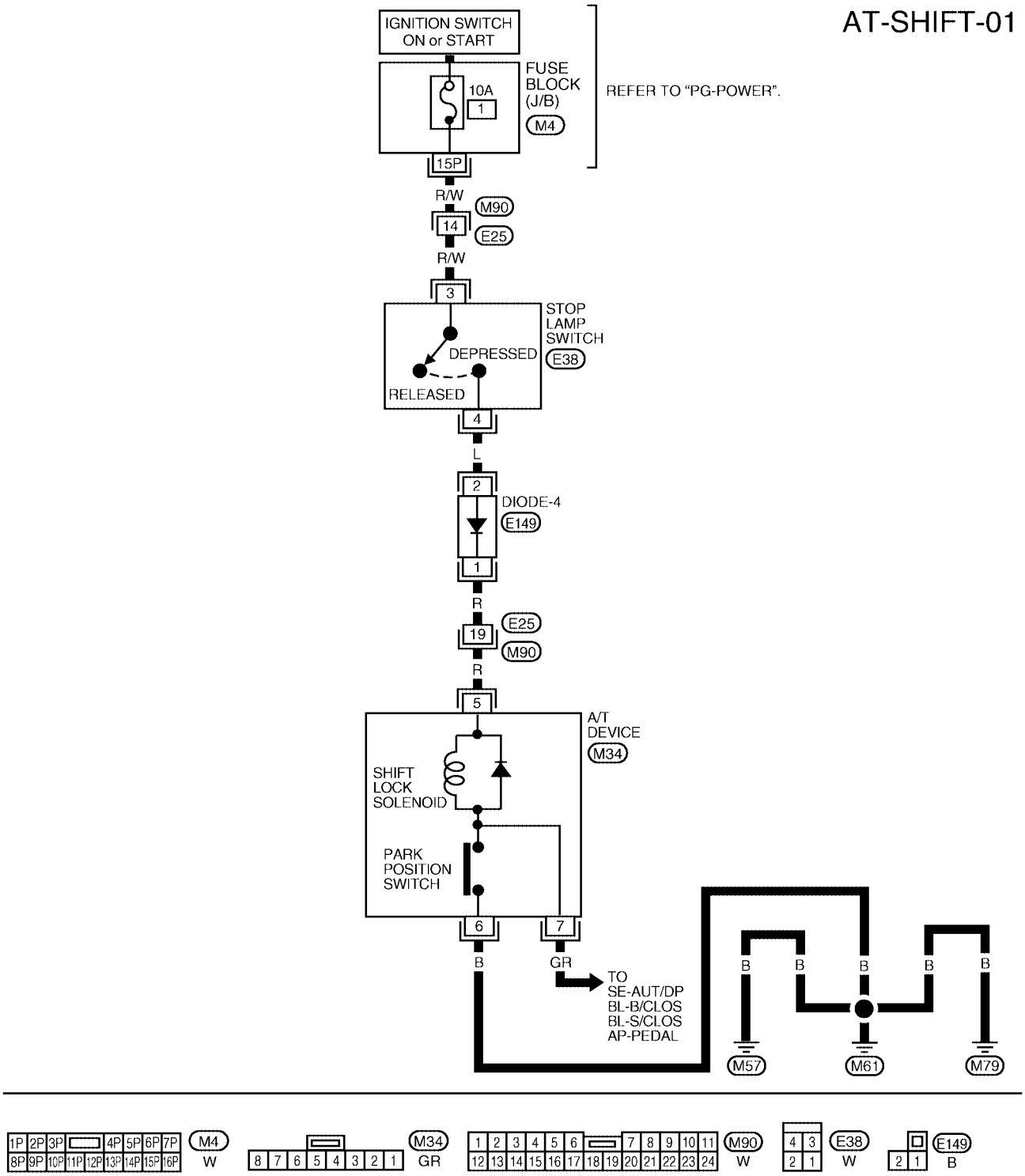

BCWA0221E

Diagnostic Procedure

UCS001EG

SYMPTOM 1:

- **Selector lever cannot be moved from “P” position with key in ON position and brake pedal applied.**
- **Selector lever can be moved from “P” position with key in ON position and brake pedal released.**
- **Selector lever can be moved from “P” position when key is removed from key cylinder.**

SYMPTOM 2:

- **Ignition key cannot be removed when selector lever is set to “P” position.**
- **Ignition key can be removed when selector lever is set to any position except “P”.**

1. CHECK KEY INTERLOCK CABLE

Check the key interlock cable for damage.

OK or NG

OK >> GO TO 2.
NG >> Repair key interlock cable. Refer to AT-606, "KEY INTERLOCK CABLE" .

2. CHECK SELECTOR LEVER POSITION

Check the selector lever position for damage.

OK or NG

OK >> GO TO 3.
NG >> Check selector lever. Refer to AT-610, "Control Cable Adjustment" .

3. CHECK SHIFT LOCK SOLENOID AND PARK POSITION SWITCH

1. Connect A/T device harness connector.
2. Turn ignition switch “ON”.
3. Selector lever is set in “P” position.
4. Check operation sound.

Condition	Brake pedal	Operation sound
When ignition switch is turned to “ON” position and selector lever is set in “P” position.	Depressed	Yes
	Released	No

OK or NG

OK >> **INSPECTION END**
NG >> GO TO 4.

4. CHECK POWER SOURCE

1. Turn ignition switch “ON”. (Do not start engine.)
2. Check the voltage between A/T device harness connector M34 terminal 5 (R) and ground.

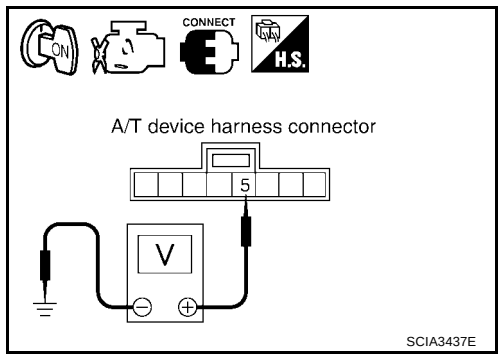

Condition	Brake pedal	Data (Approx.)
When ignition switch is turned to “ON” position.	Depressed	Battery voltage
	Released	0V

OK or NG

OK >> GO TO 7.
NG >> GO TO 5.

5. CHECK STOP LAMP SWITCH

1. Turn ignition switch “OFF”.
2. Disconnect stop lamp switch harness connector.
3. Check continuity between stop lamp switch harness connector E38 terminals 3 and 4.

Condition	Continuity
When brake pedal is depressed	Yes
When brake pedal is released	No

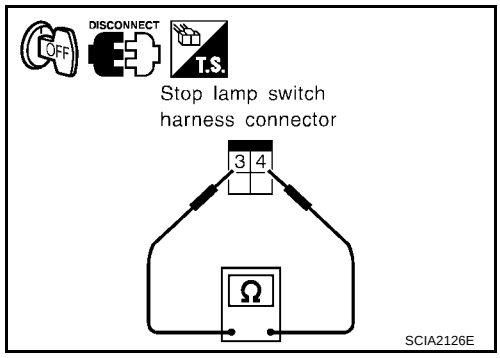

Check stop lamp switch after adjusting brake pedal — refer to BR-6, "BRAKE PEDAL" .

OK or NG

OK >> GO TO 6.
NG >> Repair or replace damaged parts.

6. DETECT MALFUNCTIONING ITEM

Check the following items. If any items are damaged, repair or replace damaged parts.

- 10A fuse [No.1, located in the fuse block (J/B)]
- Harness for short or open between ignition switch and stop lamp switch harness connector E38 terminal 3 (R/W)
- Harness for short or open between stop lamp switch harness connector E38 terminal 4 (L) and diode-4 harness connector E149 terminal 2 (L).
- Harness for short or open between diode-4 harness connector E149 terminal 1 (R) and A/T device harness connector M34 terminal 5 (R).
- Diode-4
- Ignition switch (Refer to PG-4, "POWER SUPPLY ROUTING CIRCUIT" .)

OK or NG

OK >> GO TO 7.
NG >> Repair or replace damaged parts.

7. CHECK GROUND CIRCUIT

1. Turn ignition switch “OFF”.
2. Disconnect A/T device harness connector.
3. Check continuity between A/T device harness connector M34 terminal 6 (B) and ground.

   Continuity should exist.

4. Connect A/T device harness connector.

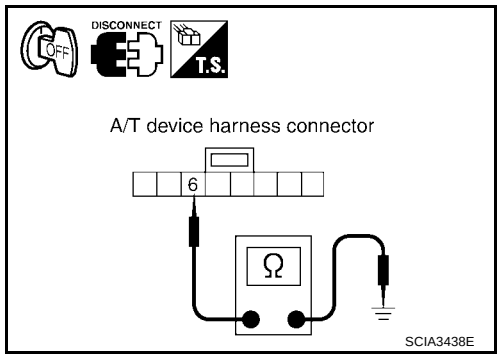

OK or NG

OK >> Replace shift lock solenoid or park position switch.
NG >> Repair open circuit or short to ground or short to power in harness or connectors.

SHIFT CONTROL SYSTEM

PFP:34901

Removal and Installation

UCS0024H

CONTROL DEVICE

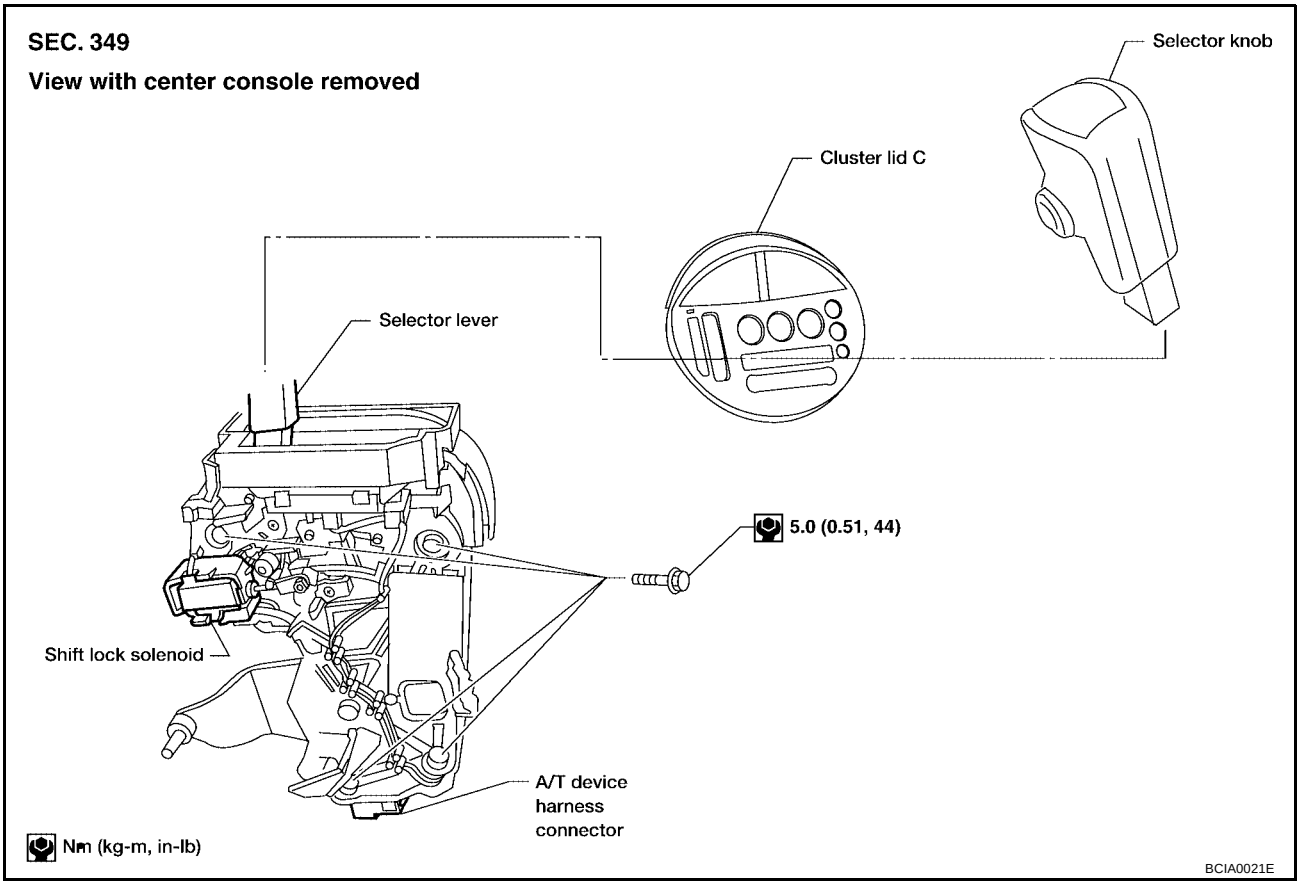

SELECTOR KNOB

REMOVAL

1. Slide the selector knob cover downwards with fingers to reveal the selector knob latch.
2. Gently pry the selector knob latch outward to release then lift the selector knob up to remove.

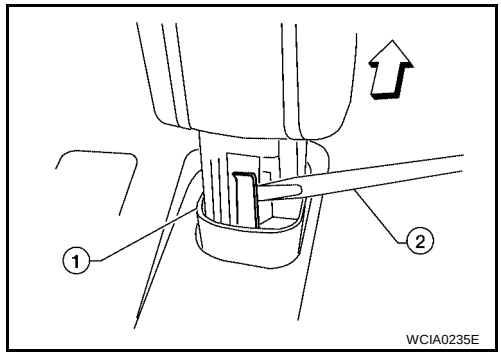

INSTALLATION

Set the selector knob in place on the selector lever and push downward until the selector knob latch engages.

Control Cable

UCS0024I

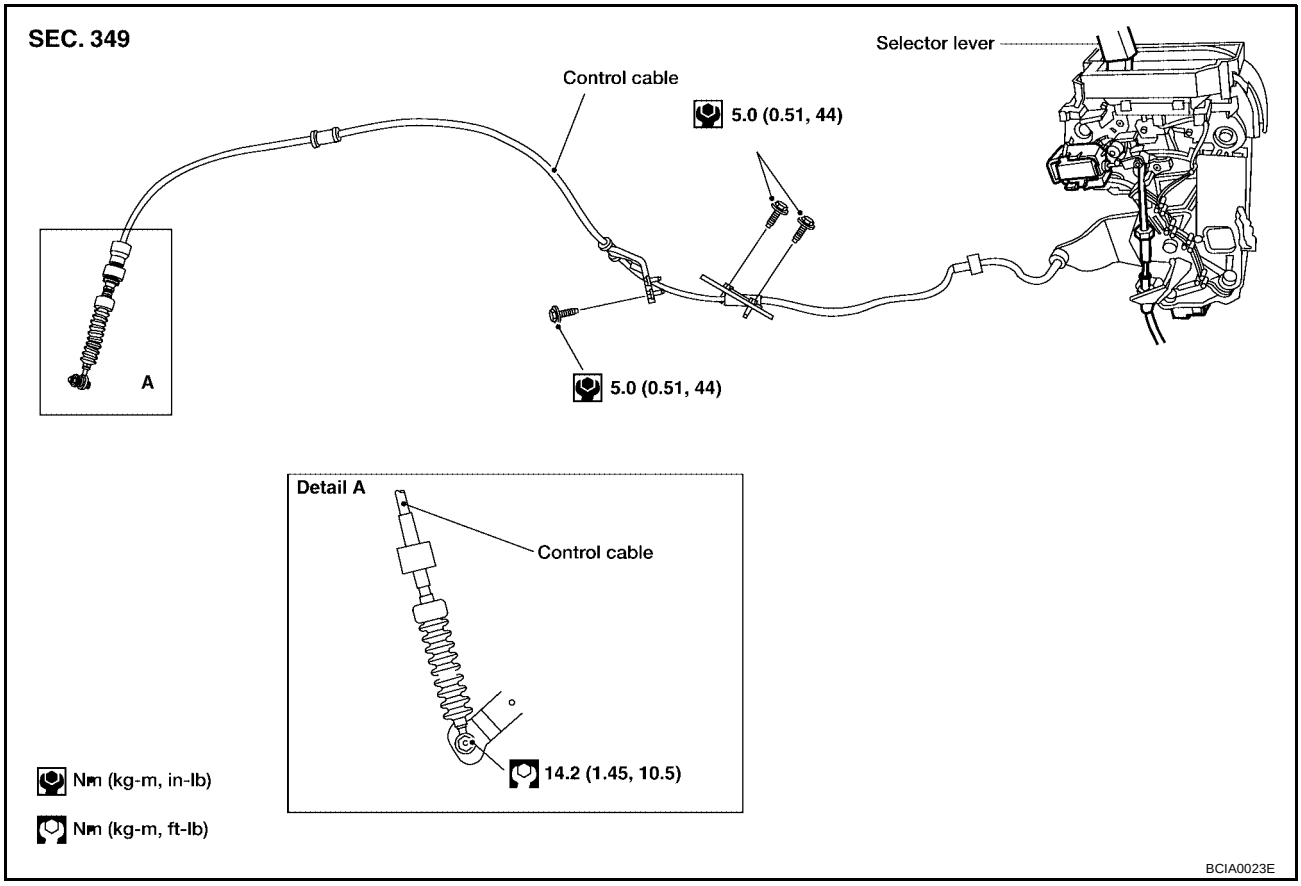

KEY INTERLOCK CABLE

PFP:34908

Components

UCS001EN

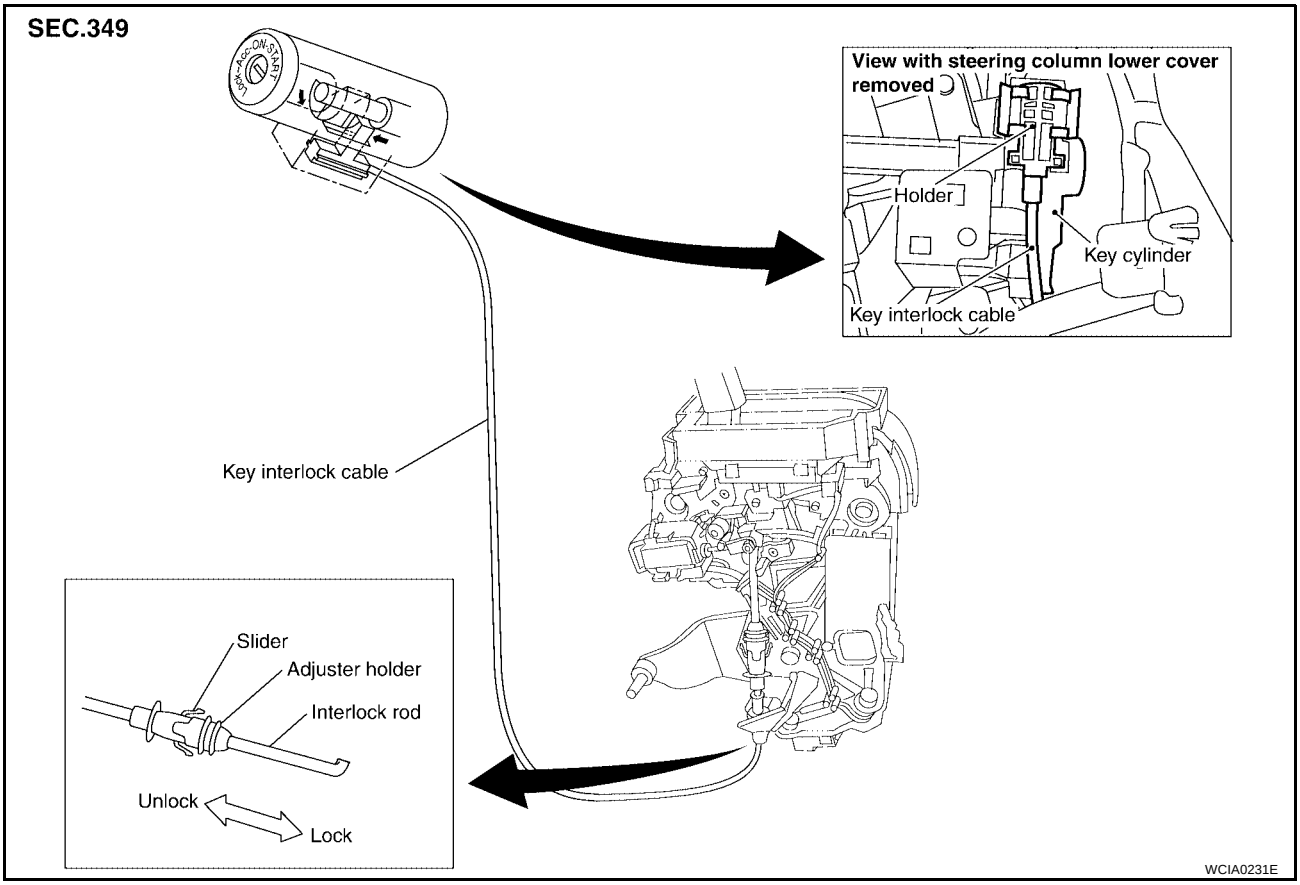

CAUTION:

- **Install key interlock cable in such a way that it will not be damaged by sharp bends, twists or interference with adjacent parts.**
- **After installing key interlock cable to control device, make sure that casing cap and bracket are firmly secured in their positions. If casing cap be removed with an external load of less than 39.2 N (4.0 kg, 8.8 lb), replace key interlock cable with new one.**

Removal

UCS001EO

1. Unlock slider by squeezing lock tabs on slider from adjuster holder.
2. Remove casing cap from bracket of control device and remove interlock rod from cable.

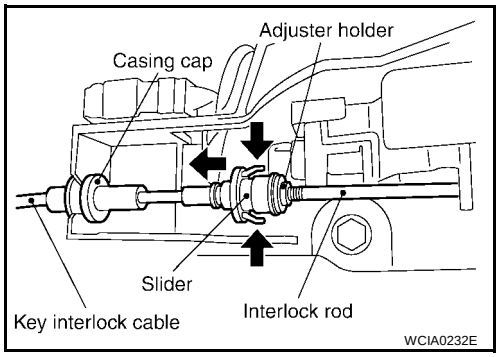

3. Remove holder from key cylinder and remove key interlock cable.

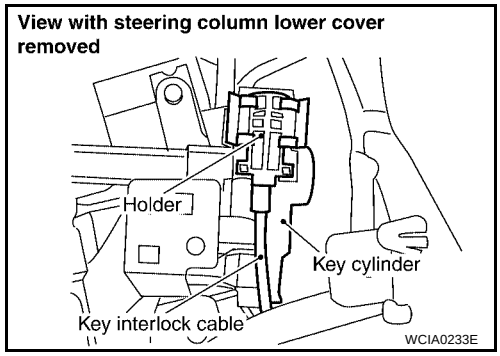

Installation

UCS001EP

1. Set key interlock cable to key cylinder and install holder.
2. Turn ignition key to lock position.
3. Set selector lever to P position.

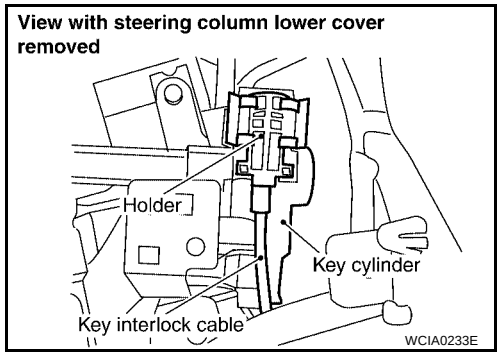

4. Insert interlock rod into adjuster holder.
5. Install casing cap to bracket.
6. Move slider in order to fix adjuster holder to interlock rod.

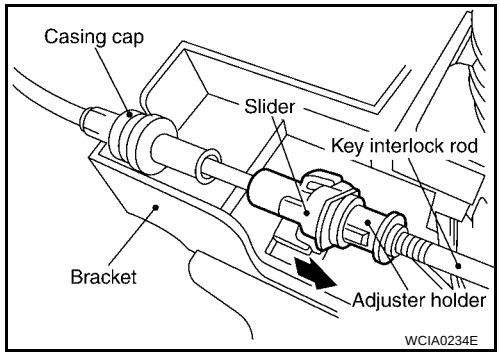

ON-VEHICLE SERVICE

PFP:00000

Revolution Sensor Replacement

UCS002KR

1. Remove intake air duct.
2. Disconnect electrical connector.
3. Remove revolution sensor from A/T.
4. Reinstall any part removed.
   - **Do not reuse seal bolt.**

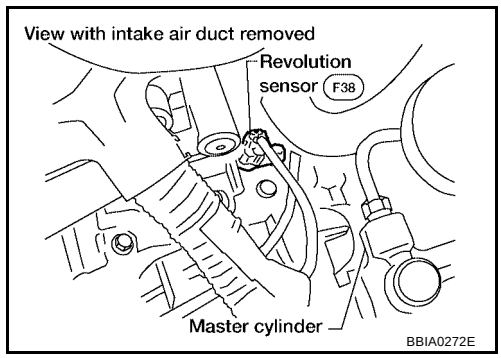

Turbine Revolution Sensor Replacement

UCS002KS

1. Remove battery and bracket.
2. Disconnect electrical connector.
3. Remove bolt, and turbine revolution sensor from A/T.
4. Reinstall any part removed.
   - **Do not reuse seal bolt.**

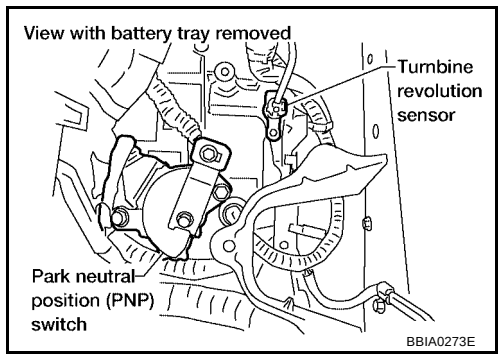

Park/Neutral Position (PNP) Switch Adjustment

UCS002KT

1. Remove battery and bracket.
2. Remove cable from range lever.
3. Set range lever in neutral position.
4. Remove range lever and install alignment tool (J-45404).
5. Loosen park/neutral position (PNP) switch fixing bolts.
6. Adjust park/neutral position (PNP) switch so that alignment tool (J-45404) pointer aligns with neutral base line on park/neutral position (PNP) switch body.

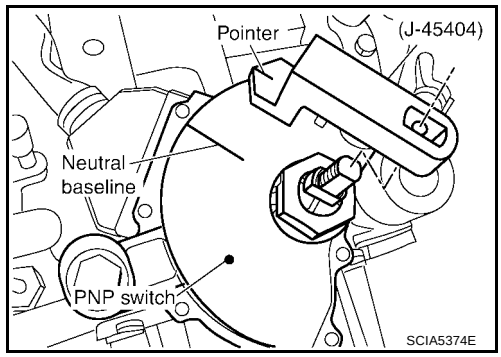

7. Tighten park/neutral position (PNP) switch fixing bolts.
8. Reinstall range lever and cable.
9. Adjust control cable. Refer to AT-610, "Control Cable Adjustment" .
10. Reinstall battery and bracket.
11. Check continuity of park/neutral position (PNP) switch. Refer to AT-464, "Component Inspection" .

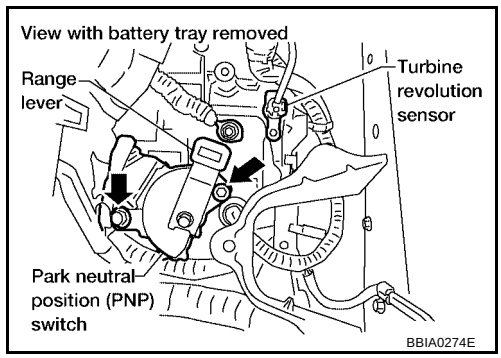

ATF Cooler

UCS002KU

REMOVAL

1. Drain ATF.
2. Drain engine coolant, refer to MA-14, "Changing Engine Coolant" .
3. Remove hose clamps and hoses from ATF cooler.
4. Remove bolt from ATF cooler and remove ATF cooler.

INSTALLATION

Installation is the reverse order of removal.

- **Do not reuse sealing parts.**

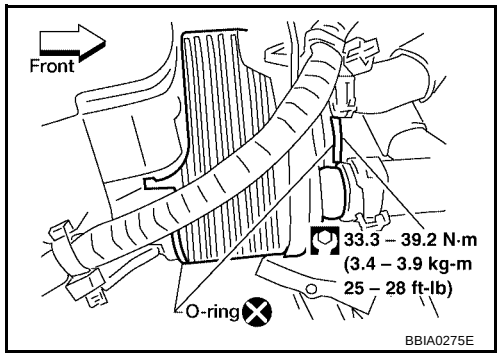

ATF Cooler Valve

UCS002KV

Refer to the figure for ATF cooler valve and hoses removal and installation information.

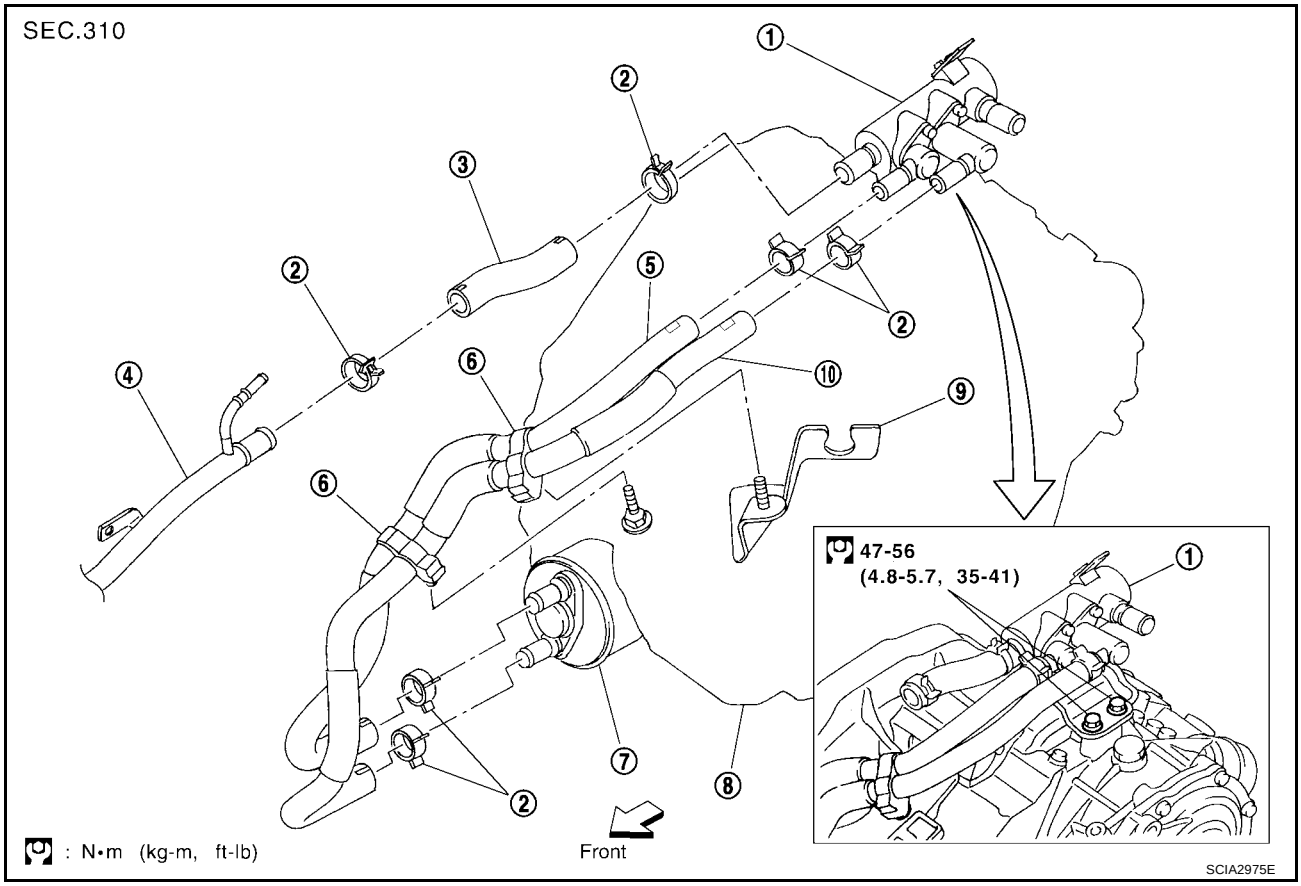

1. ATF cooler valve assembly	2. Hose clamp	3. Heater hose
4. Heater pipe	5. Outlet water hose	6. Hose clip
7. ATF cooler assembly	8. Transaxle assembly	9. Control cable bracket
10. Inlet water hose		

COMPONENT INSPECTION

1. Make sure that ATF cooler valve is fully opened at room temperature.

   Dimension "A": More than 72.0 mm (2.835 in)

   A: Distance between ATF cooler valve port end face and valve shaft end face.

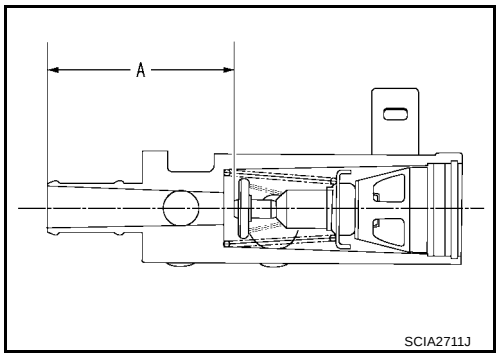

2. Submerge ATF cooler valve in a water-filled container, and then heat it up with temperature of over 82°C (180°F) for 10 minutes more.

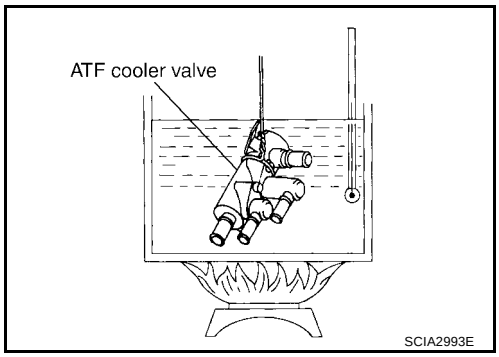

3. Make sure that ATF cooler valve is fully closed.

   Dimension "A": Less than 66.5 mm (2.618 in)

   A: Distance between ATF cooler valve port end face and valve shaft end face.

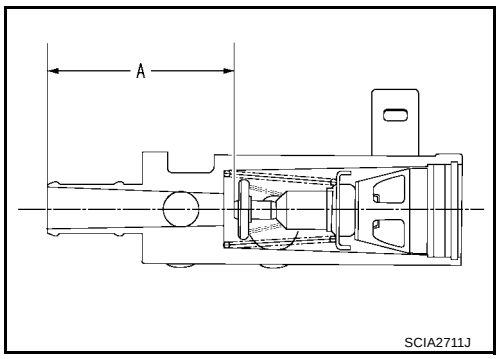

Control Cable Adjustment

UCS002KW

Move selector lever from the P position to the D position. You should be able to feel the detent in each position. If the detent cannot be felt or the pointer indicating the position is improperly aligned, the control cable needs adjustment.

1. Place selector lever in the P position.

   CAUTION:
   Turn wheels more than 1/4 turn and apply the parking brake.

2. Loosen control cable lock nut.
3. Using the specified force, push control cable in the direction of the arrow shown in the illustration.

   Specified force : 9.8 N (1.0 kg, 2.2 lb)

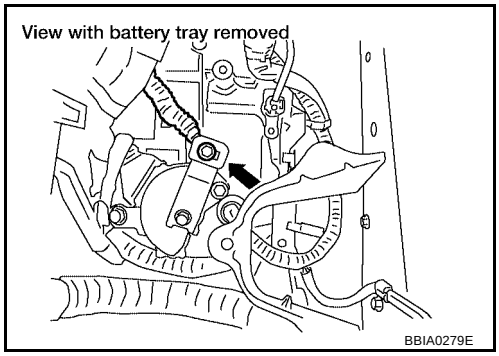

4. Tighten control cable lock nut.
5. Move selector lever from P to D position. Make sure that selector lever moves smoothly.
   - **Make sure that the starter operates when the selector lever is placed in the N or P position.**
   - **Make sure that the transmission is locked properly when the selector lever is placed in the P position.**

Side cover

UCS002KX

REMOVAL

1. Remove engine under cover.
2. Drain ATF. Refer to MA-23, "Changing A/T Fluid" .
3. Remove side cover bolts and side cover.

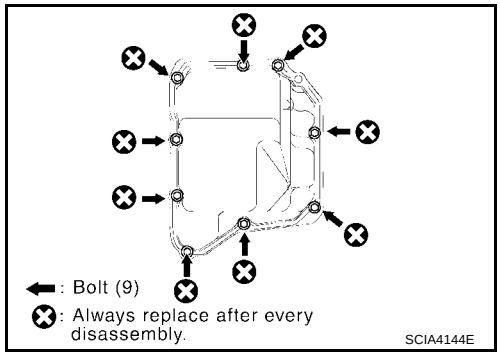

INSTALLATION

Installation is the reverse order of removal. Refer to AT-614, "Components" .

Control Valve Assembly

UCS002KY

REMOVAL

1. Remove side cover. Refer to AT-611, "Side cover" .
2. Disconnect solenoid valve connectors.
3. Disconnect control valve assembly bolts and remove control valve assembly.

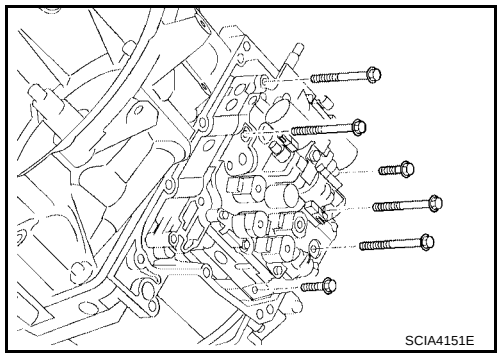

INSTALLATION

Installation is the reverse order of removal.

- Install bolts in sequence as shown. Refer to AT-614, "Components" for specified torque.

Bolt symbol	Length mm (in)	Number of bolts
A	55 (2.17)	2
B	50 (1.97)	2
C	16 (0.63)	2

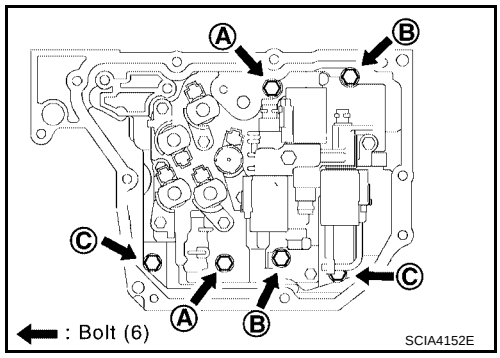

Transmission wire

UCS002KZ

REMOVAL

1. Remove PNP switch. Refer to AT-614, "Components" .
2. Remove side cover. Refer to AT-611, "Side cover" .

3. Disconnect solenoid valve connectors.
4. Remove transmission wire.

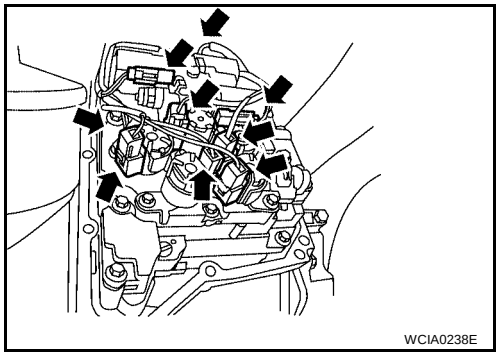

INSTALLATION

Installation is the reverse order of removal.

REMOVAL AND INSTALLATION

PFP:00000

Removal

UCS0015P

Remove the engine and transaxle assembly from the vehicle. Refer to EM-133, "ENGINE ASSEMBLY" .

Inspection After Removal

UCS001E1

- Drive plate runout

  CAUTION:
  Do not allow any magnetic materials to contact the ring gear teeth.

  Maximum allowable runout:

  Refer to EM-166, "DRIVE PLATE" .

- If this runout is out of allowance, replace drive plate and ring gear.

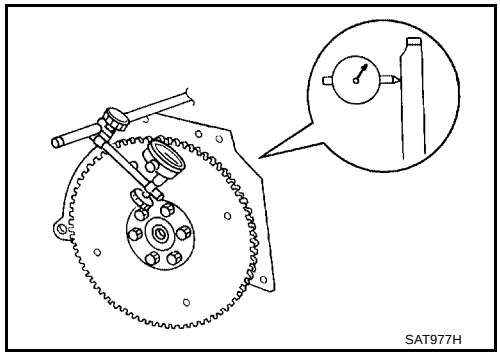

- When connecting torque converter to transaxle, measure distance “A” to be certain that they are correctly assembled.

  Distance “A” : 14 mm (0.55 in) or more

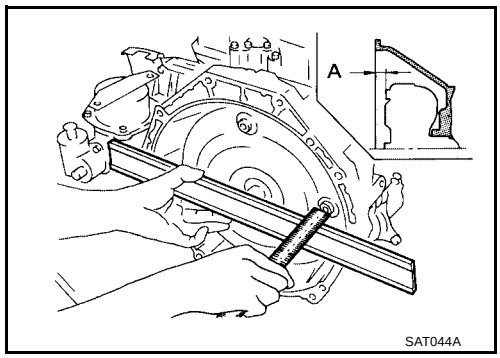

Installation

UCS0015Q

- Install in the reverse order of removal.
- When replacing the A/T assembly, initialize TCM. Refer to AT-376, "Precautions for A/T Assembly or TCM Replacement" .
- Perform road test. Refer to AT-425, "ROAD TEST" .

OVERHAUL

PFP:00000

Components

UCS002L0

Manufactured on October 1, 2003 or earlier

SEC.313・314・315・316

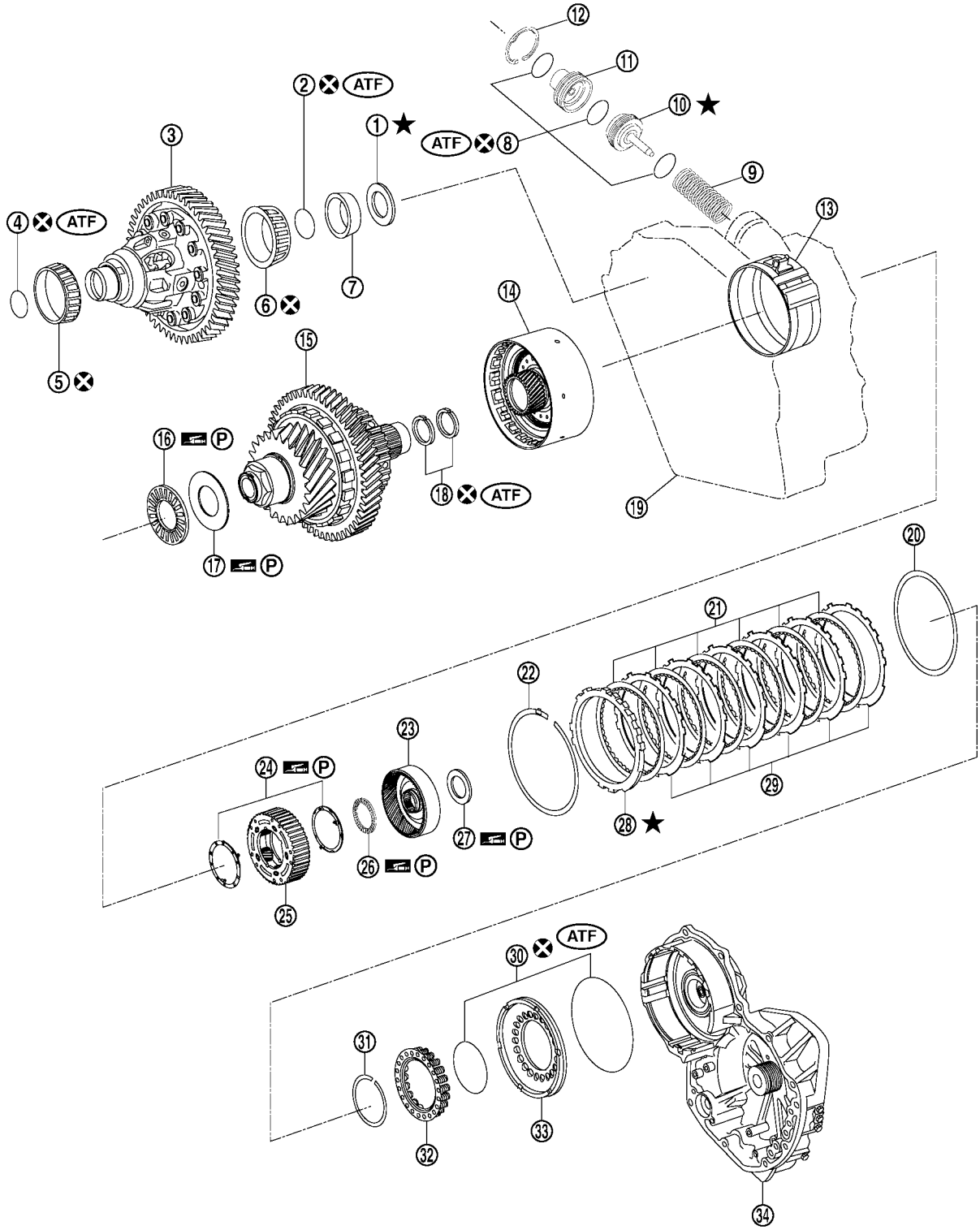

P : Apply petroleum jelly.

ATF : Apply ATF.

★ : Select with proper thickness.

⊗ : Always replace after every disassembly.

SCIA5489E

1. Adjust shim
2. O-ring
3. Differential gear assembly
4. O-ring
5. Tapered roller bearing
6. Tapered roller bearing
7. Outer race
8. O-ring
9. Compression spring
10. U/D brake piston assembly
11. U/D brake damper assembly
12. Snap ring
13. U/D brake band assembly
14. U/D clutch assembly
15. U/D gear assembly
16. Thrust needle roller bearing
17. Thrust bearing race
18. Seal ring
19. Transaxle case
20. B5 brake cushion plate
21. B5 brake disc
22. Snap ring
23. U/D RR planetary ring gear sub assembly
24. Thrust bearing race
25. U/D RR planetary carrier assembly
26. Thrust needle roller bearing
27. Thrust bearing race
28. B5 brake flange
29. B5 brake plate
30. O-ring
31. Snap ring
32. Return spring
33. B5 brake piston
34. Transaxle case cover

Manufactured on October 2, 2003 and later

SEC.313・314・315・316

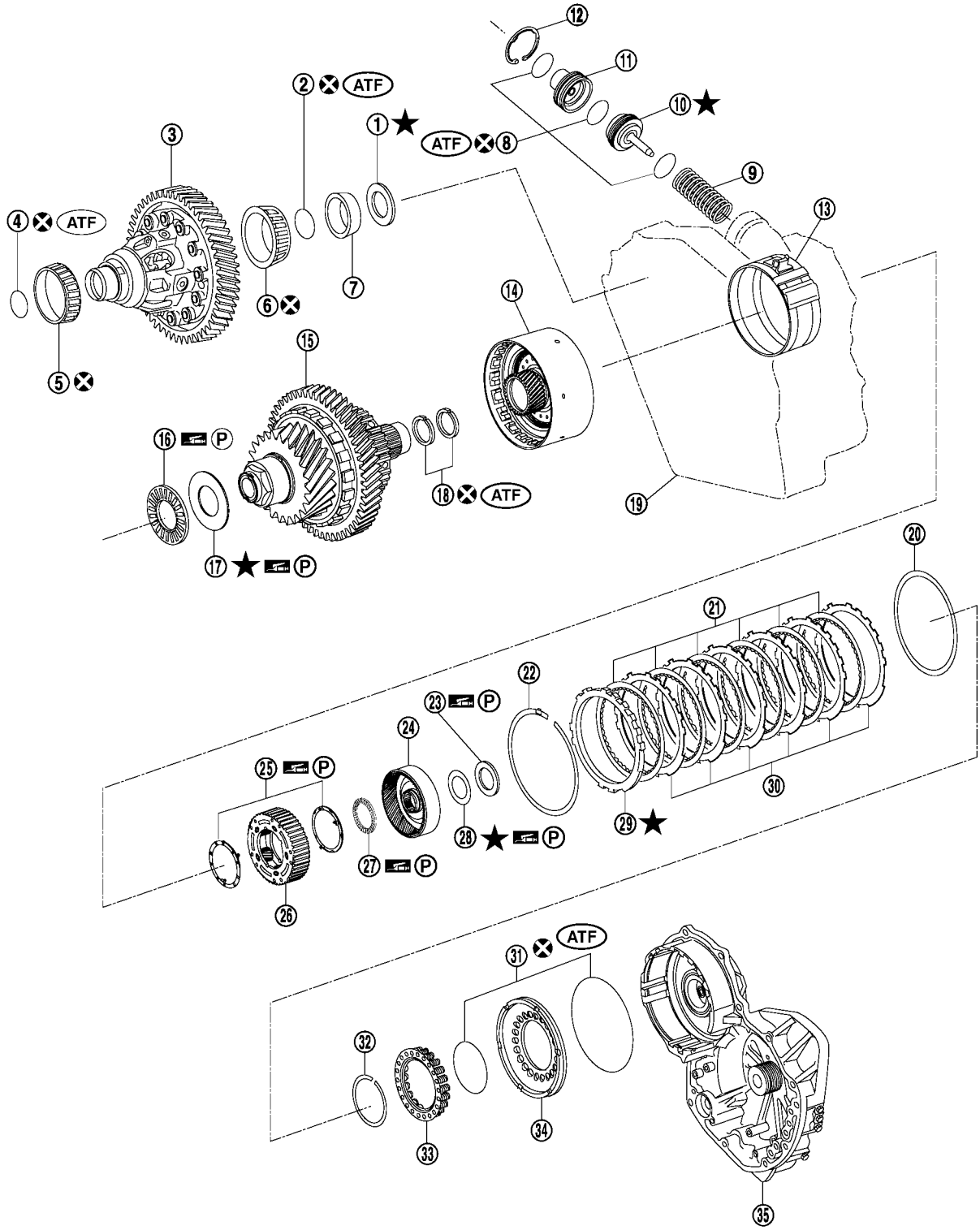

P : Apply petroleum jelly.

ATF : Apply ATF.

★ : Select with proper thickness.

⊗ : Always replace after every disassembly.

SCIA5433E

1. Adjust shim
2. O-ring
3. Differential gear assembly
4. O-ring
5. Tapered roller bearing
6. Tapered roller bearing

7. Outer race	8. O-ring	9. Compression spring
10. U/D brake piston assembly	11. U/D brake damper assembly	12. Snap ring
13. U/D brake band assembly	14. U/D clutch assembly	15. U/D gear assembly
16. Thrust needle roller bearing	17. Thrust bearing race	18. Seal ring
19. Transaxle case	20. B5 brake cushion plate	21. B5 brake disc
22. Snap ring	23. Thrust bearing race	24. U/D RR planetary ring gear sub assembly
25. Thrust bearing race	26. U/D RR planetary carrier assembly	27. Thrust needle roller bearing
28. Adjust shim	29. B5 brake flange	30. B5 brake plate
31. O-ring	32. Snap ring	33. Return spring
34. B5 brake piston	35. Transaxle case cover	

Manufactured on October 1, 2003 or earlier

SEC.313・314・315・316

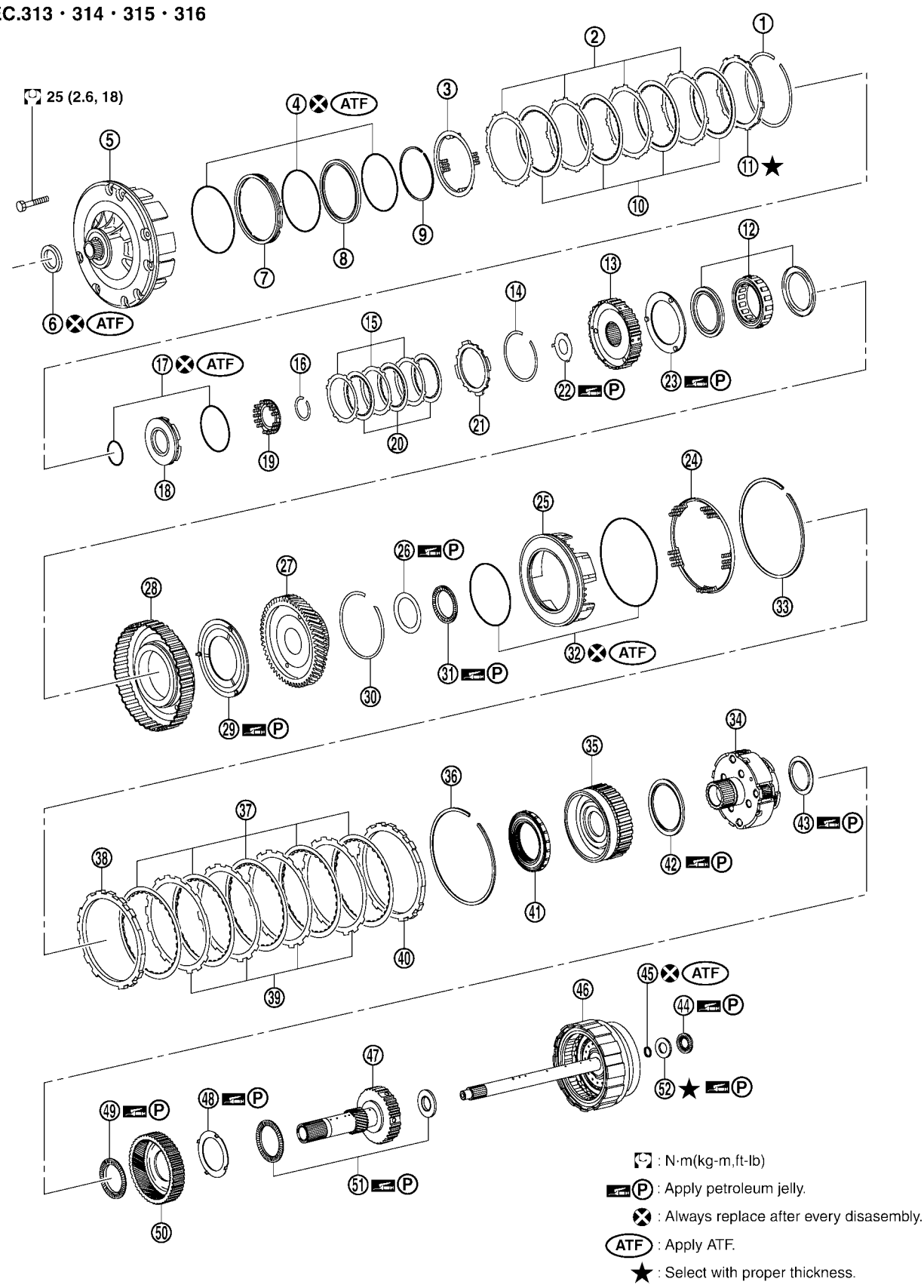

1. Snap ring
2. 2nd brake plate
3. Return spring
4. O-ring
5. Oil pump assembly
6. Oil seal

7. 2nd brake piston	8. 2nd brake sleeve	9. Snap ring
10. 2nd brake disc	11. 2nd brake flange	12. One-way clutch No.1
13. 2nd coast brake hub	14. Snap ring	15. 2nd coast brake plate
16. Snap ring	17. O-ring	18. 2nd coast brake piston
19. Return spring	20. 2nd coast brake disc	21. 2nd coast brake flange
22. Thrust washer	23. Thrust washer	24. Return spring
25. 1st and reverse brake piston	26. Thrust bearing race	27. Counter drive gear sub assembly
28. One-way clutch outer race sub assembly	29. Thrust washer	30. Snap ring
31. Thrust bearing	32. O-ring	33. Snap ring
34. Planetary gear assembly	35. FR planetary ring gear assembly	36. Snap ring
37. 1st and reverse brake disc	38. 1st and reverse brake flange	39. 1st and reverse brake plate
40. 1st and reverse brake flange	41. One-way clutch No.2	42. Thrust bearing
43. Thrust bearing race	44. Thrust needle roller bearing	45. Seal ring
46. Forward and direct clutch assembly	47. Planetary sun gear sub assembly	48. Thrust bearing race
49. Thrust needle roller bearing	50. RR planetary ring gear assembly	51. Thrust needle roller bearing
52. Thrust bearing race		

Manufactured on October 2, 2003 and later

SEC.313・314・315・316

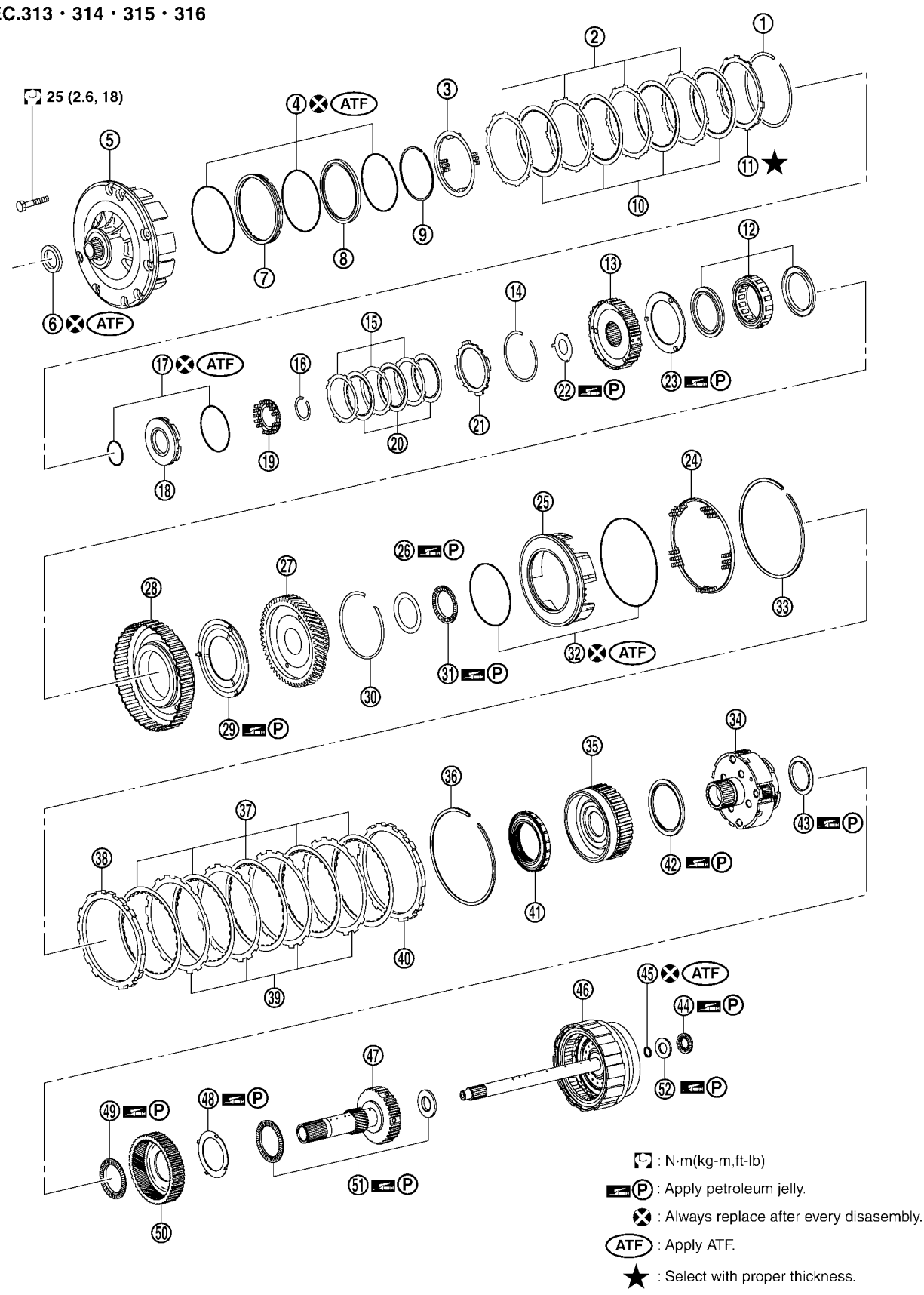

1. Snap ring
2. 2nd brake plate
3. Return spring
4. O-ring
5. Oil pump assembly
6. Oil seal

7. 2nd brake piston	8. 2nd brake sleeve	9. Snap ring
10. 2nd brake disc	11. 2nd brake flange	12. One-way clutch No.1
13. 2nd coast brake hub	14. Snap ring	15. 2nd coast brake plate
16. Snap ring	17. O-ring	18. 2nd coast brake piston
19. Return spring	20. 2nd coast brake disc	21. 2nd coast brake flange
22. Thrust washer	23. Thrust washer	24. Return spring
25. 1st and reverse brake piston	26. Thrust bearing race	27. Counter drive gear sub assembly
28. One-way clutch outer race sub assembly	29. Thrust washer	30. Snap ring
31. Thrust bearing	32. O-ring	33. Snap ring
34. Planetary gear assembly	35. FR planetary ring gear assembly	36. Snap ring
37. 1st and reverse brake disc	38. 1st and reverse brake flange	39. 1st and reverse brake plate
40. 1st and reverse brake flange	41. One-way clutch No.2	42. Thrust bearing
43. Thrust bearing race	44. Thrust needle roller bearing	45. Seal ring
46. Forward and direct clutch assembly	47. Planetary sun gear sub assembly	48. Thrust bearing race
49. Thrust needle roller bearing	50. RR planetary ring gear assembly	51. Thrust needle roller bearing
52. Thrust bearing race		

Manufactured on October 1, 2003 or earlier

SEC. 310·311·315·317·319·381

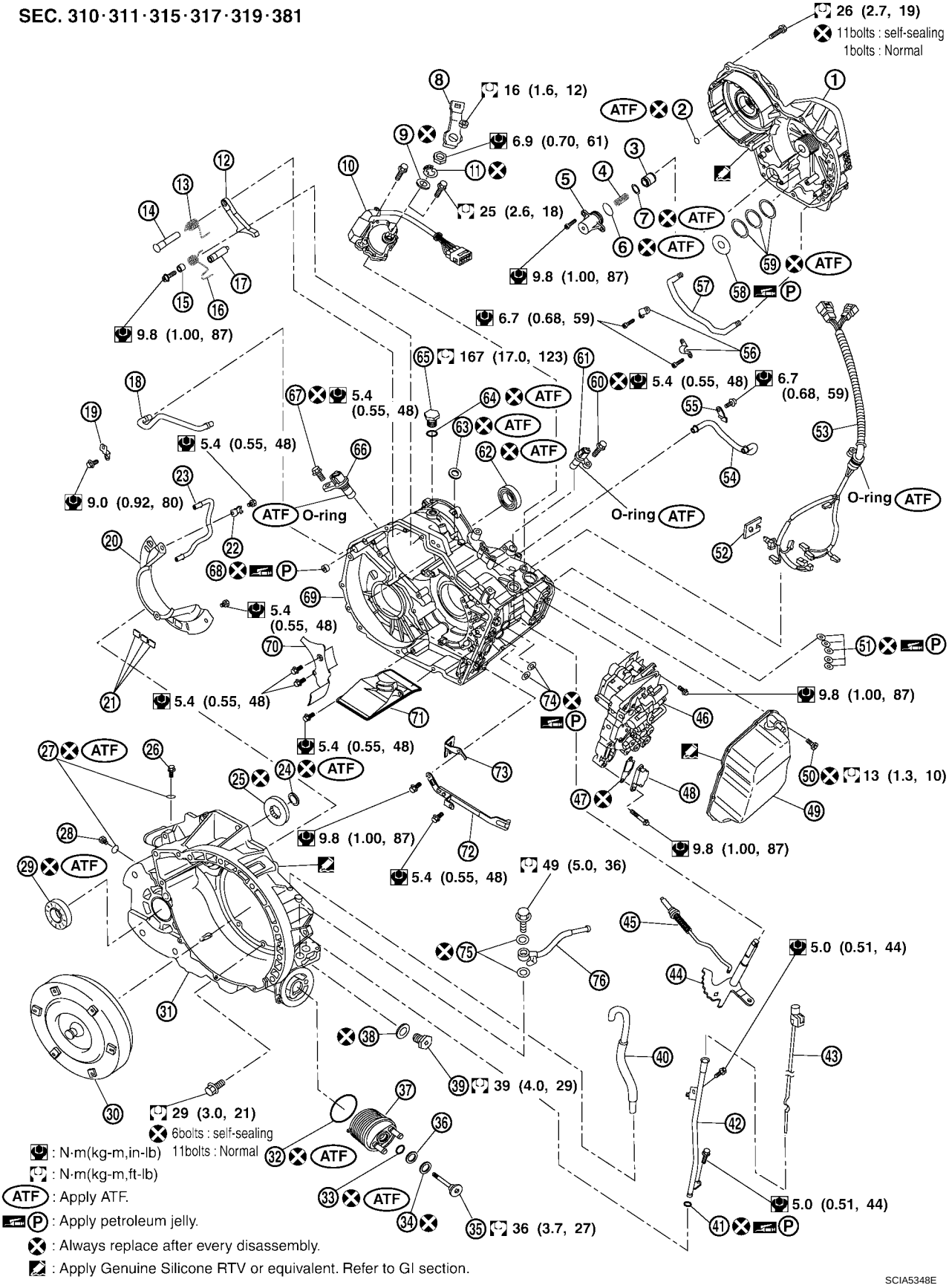

1. Transaxle case cover
2. Seal ring
3. Forward clutch accumulator piston
4. Compression spring
5. Accumulator cover
6. O-ring

7. Seal ring
8. Range lever
9. Washer plate
10. PNP switch
11. Lock washer
12. Parking lock pawl
13. Torsion spring No.1
14. Parking lock pawl shaft
15. Spring guide sleeve
16. Torsion spring No.2
17. Parking lockpin sub assembly
18. U/D brake apply tube sub assembly
19. Tube clamp
20. Oil reservoir plate
21. Oil cleaner magnet
22. Tube clamp
23. Differential gear lube apply tube
24. Seal ring
25. Thrust roller bearing
26. Straight screw plug
27. O-ring
28. Straight screw plug
29. Differential side oil seal
30. Torque converter
31. Transaxle housing
32. O-ring
33. O-ring
34. Spring washer
35. Hexagon bolt
36. Washer
37. ATF cooler assembly
38. gasket
39. Drain plug
40. Air breather hose
41. O-ring
42. A/T fluid charging pipe
43. A/T fluid level gauge
44. Manual valve lever sub assembly
45. Parking lock rod sub assembly
46. Control valve assembly
47. Suction cover gasket
48. Suction cover
49. Side cover
50. Seal bolt
51. Governor apply gasket
52. Sensor clamp
53. Transmission wire
54. Transaxle lube apply tube
55. Tube clamp
56. Tube clamp
57. U/D clutch apply tube sub assembly
58. Bearing race
59. Seal ring
60. Seal bolt
61. Turbine revolution sensor
62. Differential side oil seal
63. Manual valve oil seal
64. O-ring
65. Anchor bolt
66. Revolution sensor
67. Seal bolt
68. Governor apply gasket
69. Transaxle case
70. Oil reserver plate
71. Oil strainer sub assembly
72. Manual detent spring sub assembly
73. Parking lock pawl braket
74. Governor apply gasket
75. Copper washer
76. Fluid cooler tube

Manufactured on October 2, 2003 and later

SEC. 310·311·315·317·319·381

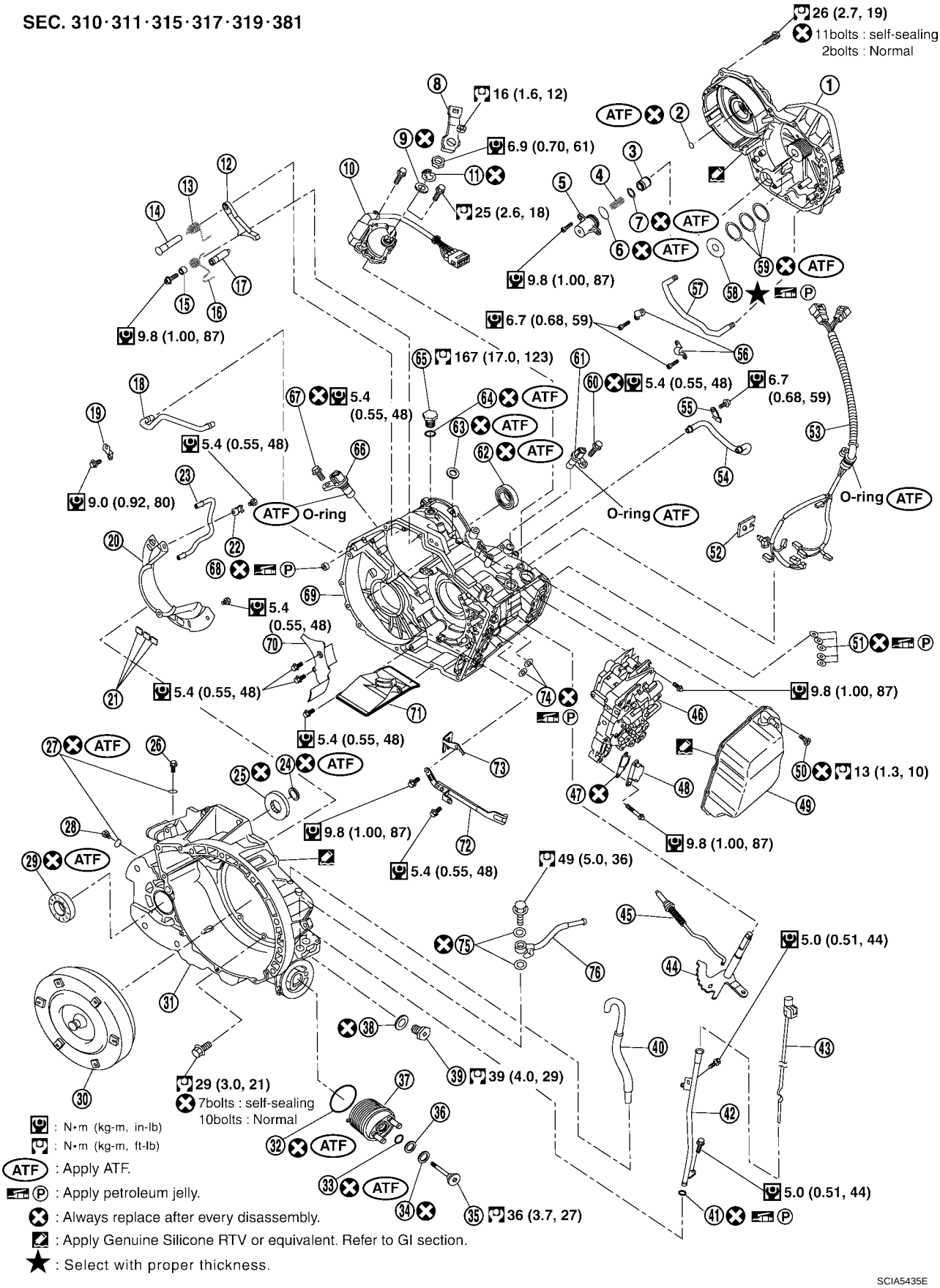

1. Transaxle case cover
2. Seal ring
3. Forward clutch accumulator piston
4. Compression spring
5. Accumulator cover
6. O-ring

7. Seal ring
8. Range lever
9. Washer plate
10. PNP switch
11. Lock washer
12. Parking lock pawl
13. Torsion spring No.1
14. Parking lock pawl shaft
15. Spring guide sleeve
16. Torsion spring No.2
17. Parking lockpin sub assembly
18. U/D brake apply tube sub assembly
19. Tube clamp
20. Oil reservoir plate
21. Oil cleaner magnet
22. Tube clamp
23. Differential gear lube apply tube
24. Seal ring
25. Thrust roller bearing
26. Straight screw plug
27. O-ring
28. Straight screw plug
29. Differential side oil seal
30. Torque converter
31. Transaxle housing
32. O-ring
33. O-ring
34. Spring washer
35. Hexagon bolt
36. Washer
37. ATF cooler assembly
38. gasket
39. Drain plug
40. Air breather hose
41. O-ring
42. A/T fluid charging pipe
43. A/T fluid level gauge
44. Manual valve lever sub assembly
45. Parking lock rod sub assembly
46. Control valve assembly
47. Suction cover gasket
48. Suction cover
49. Side cover
50. Seal bolt
51. Governor apply gasket
52. Sensor clamp
53. Transmission wire
54. Transaxle lube apply tube
55. Tube clamp
56. Tube clamp
57. U/D clutch apply tube sub assembly
58. Bearing race
59. Seal ring
60. Seal bolt
61. Turbine revolution sensor
62. Differential side oil seal
63. Manual valve oil seal
64. O-ring
65. Anchor bolt
66. Revolution sensor
67. Seal bolt
68. Governor apply gasket
69. Transaxle case
70. Oil reserver plate
71. Oil strainer sub assembly
72. Manual detent spring sub assembly
73. Parking lock pawl braket
74. Governor apply gasket
75. Copper washer
76. Fluid cooler tube

Locations of Needle Bearings, Bearing Races and Thrust Washers

UCS002L1

Manufactured on October 1, 2003 or earlier

Outer and inner diameter of bearing races

Item number	Outer diameter mm (in)	Inner diameter mm (in)	Parts number*
A	57.70 (2.2716)	37.00 (1.4567)	31435 8Y020
B	77.60 (3.0551)	66.80 (2.6299)	31508 8Y010
C	71.00 (2.7953)	49.10 (1.9331)	31435 8Y021
D	41.00 (1.6142)	22.00 (0.8661)	31435 8Y010
E★	41.00 (1.6142)	13.50 (0.5315)	31435 8Y012
F	74.00 (2.9134)	53.00 (2.0866)	31435 8Y001
G	61.00 (2.4016)	43.20 (1.7008)	31435 8Y002
H	58.00 (2.2835)	43.80 (1.7244)	31435 8Y022

Outer and inner diameter of thrust washers

Item number	Outer diameter mm (in)	Inner diameter mm (in)	Parts number*
Q	99.30 (3.9094)	56.50 (2.2244)	31508 8Y000
R	77.30 (3.0433)	56.50 (2.2244)	31508 8Y001
S	74.30 (2.9252)	47.00 (1.8504)	31508 8Y002

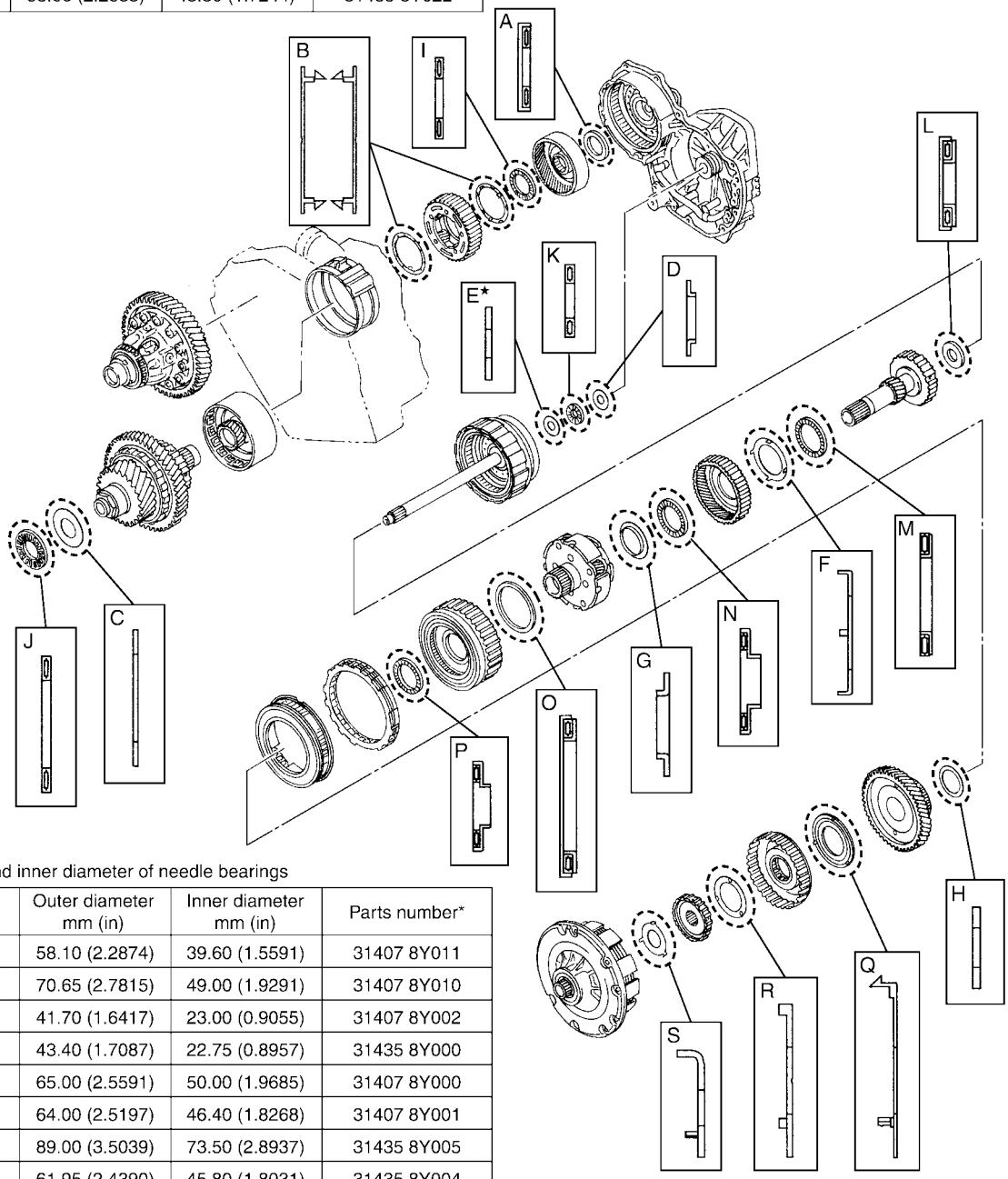

Outer and inner diameter of needle bearings

Item number	Outer diameter mm (in)	Inner diameter mm (in)	Parts number*
I	58.10 (2.2874)	39.60 (1.5591)	31407 8Y011
J	70.65 (2.7815)	49.00 (1.9291)	31407 8Y010
K	41.70 (1.6417)	23.00 (0.9055)	31407 8Y002
L	43.40 (1.7087)	22.75 (0.8957)	31435 8Y000
M	65.00 (2.5591)	50.00 (1.9685)	31407 8Y000
N	64.00 (2.5197)	46.40 (1.8268)	31407 8Y001
O	89.00 (3.5039)	73.50 (2.8937)	31435 8Y005
P	61.95 (2.4390)	45.80 (1.8031)	31435 8Y004

★ : Select with proper thickness.
* : Always check with the Parts Department for the latest parts information.

SCIA5347E

Manufactured on October 2, 2003 and later

Outer and inner diameter of bearing races

Item number	Outer diameter mm (in)	Inner diameter mm (in)	Parts number*
A	57.70 (2.2716)	37.00 (1.4567)	31435 8Y020
B	77.60 (3.0551)	66.80 (2.6299)	31508 8Y010
C★	71.00 (2.7953)	49.10 (1.9331)	31435 8Y068
D★	41.00 (1.6142)	22.00 (0.8661)	31435 8Y060
E	41.00 (1.6142)	13.50 (0.5315)	31435 8Y011
F	74.00 (2.9134)	53.00 (2.0866)	31435 8Y001
G	61.00 (2.4016)	43.20 (1.7008)	31435 8Y002
H	58.00 (2.2835)	43.80 (1.7244)	31435 8Y022

Outer and inner diameter of thrust washers

Item number	Outer diameter mm (in)	Inner diameter mm (in)	Parts number*
Q	99.30 (3.9094)	56.50 (2.2244)	31508 8Y000
R	77.30 (3.0433)	56.50 (2.2244)	31508 8Y001
S	74.30 (2.9252)	47.00 (1.8504)	31508 8Y002

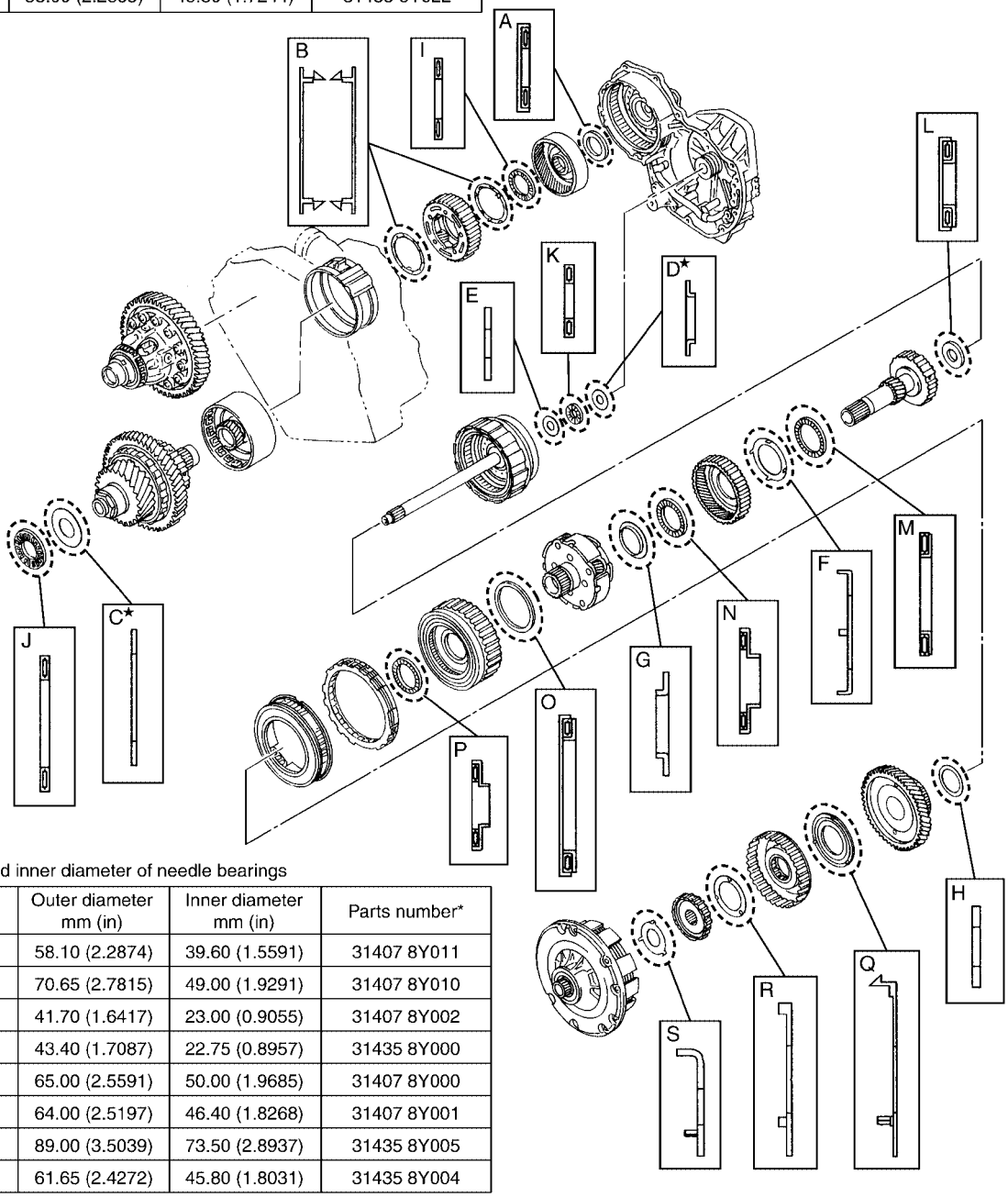

Outer and inner diameter of needle bearings

Item number	Outer diameter mm (in)	Inner diameter mm (in)	Parts number*
I	58.10 (2.2874)	39.60 (1.5591)	31407 8Y011
J	70.65 (2.7815)	49.00 (1.9291)	31407 8Y010
K	41.70 (1.6417)	23.00 (0.9055)	31407 8Y002
L	43.40 (1.7087)	22.75 (0.8957)	31435 8Y000
M	65.00 (2.5591)	50.00 (1.9685)	31407 8Y000
N	64.00 (2.5197)	46.40 (1.8268)	31407 8Y001
O	89.00 (3.5039)	73.50 (2.8937)	31435 8Y005
P	61.65 (2.4272)	45.80 (1.8031)	31435 8Y004

★ : Select with proper thickness.
* : Always check with the Parts Department for the latest parts information.

SCIA5436E

DISASSEMBLY

PFP:31020

Disassembly

UCS002L2

1. Drain ATF through drain plug.
2. Remove torque converter by transaxle case it firmly and turning while pulling straight out.

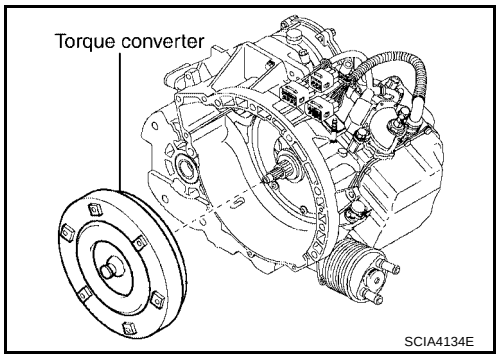

3. Remove A/T fluid level gauge.
4. Remove A/T fluid charging pipe.
5. Remove O-ring from A/T fluid charging pipe.
6. Remove air breather hose.
7. Remove fluid cooler tube.

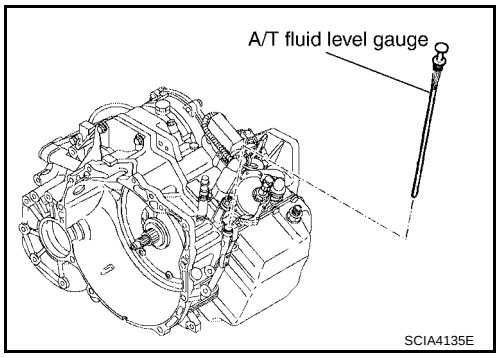

8. Remove turbine revolution sensor.

   CAUTION:
   Be careful not to damage the turbine revolution sensor and transaxle case.

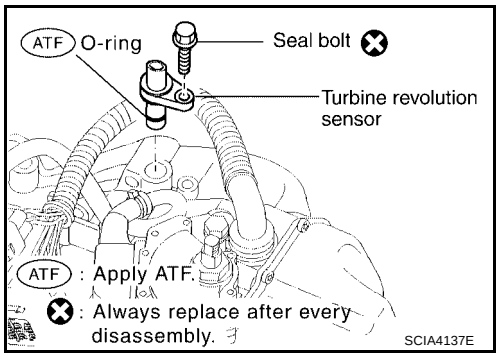

9. Remove revolution sensor.

   CAUTION:
   Be careful not to damage the revolution sensor and transaxle case.

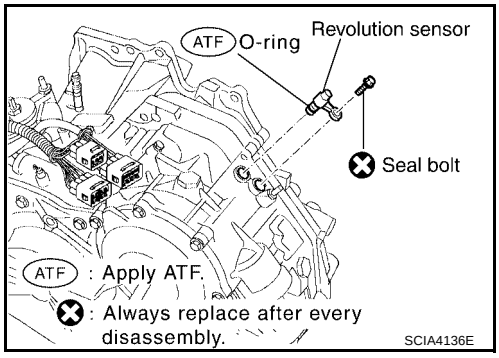

10. Remove nut and range lever.

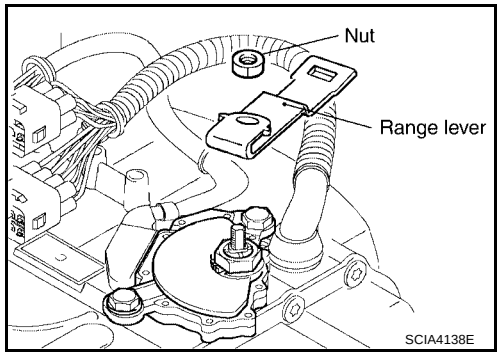

11. Using a flat-bladed screwdriver, pry off the lock washer.

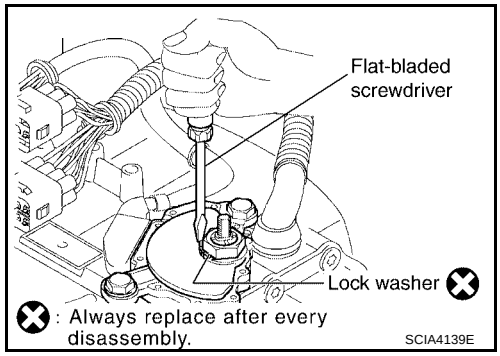

12. Loosen nut and remove lock washer.
13. Remove washer plate.

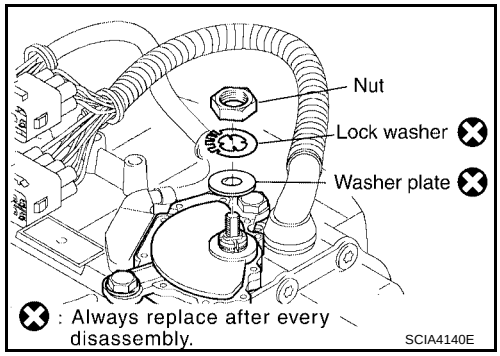

14. Remove PNP switch from transaxle case.

Bolt symbol	Length mm (in)	Number of bolts
A	20 (0.79)	1
B	33 (1.30)	1

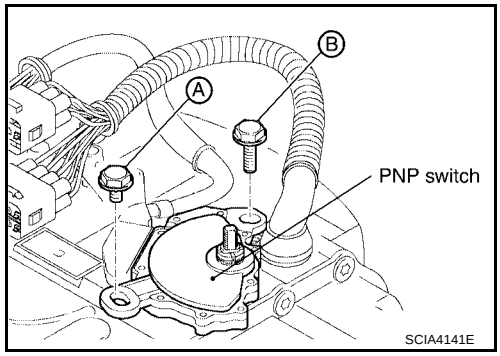

15. Remove hexagon bolt.
16. Remove ATF cooler assembly, washer and spring washer.
17. Remove O-rings from the ATF cooler assembly.

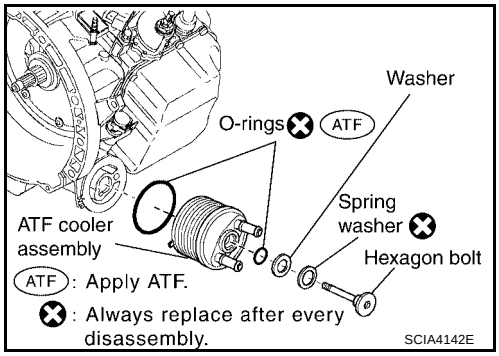

18. Remove side cover.

CAUTION:
Be careful not to damage side cover and transaxle case.

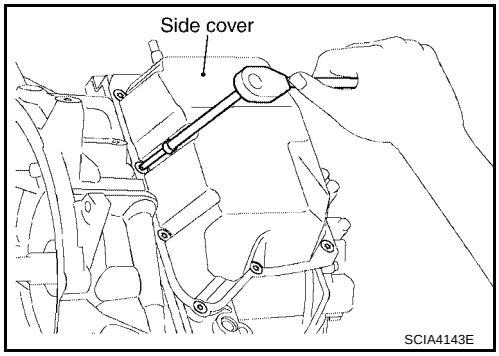

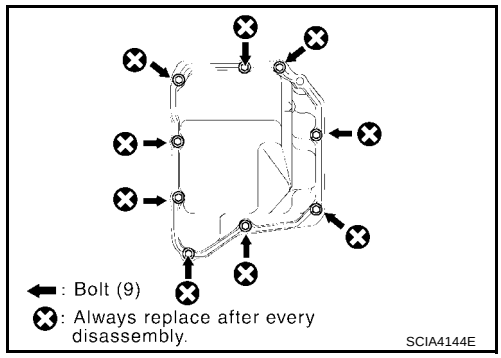

19. Disconnect solenoid connectors.

CAUTION:
Be careful not to damage connector.

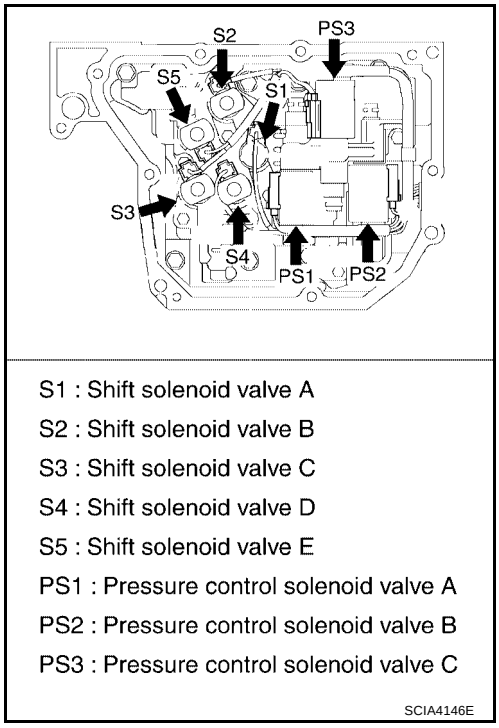

20. Remove sensor clamp tightening bolt.

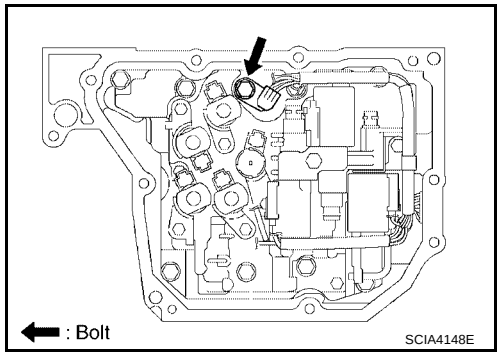

21. Remove sensor clamp and A/T fluid temperature sensor.

CAUTION:

Be careful not to damage A/T fluid temperature sensor.

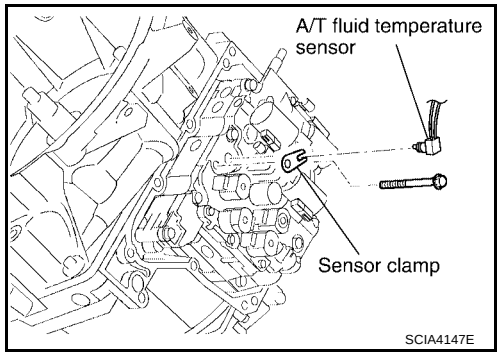

22. Remove suction cover tightening bolts.

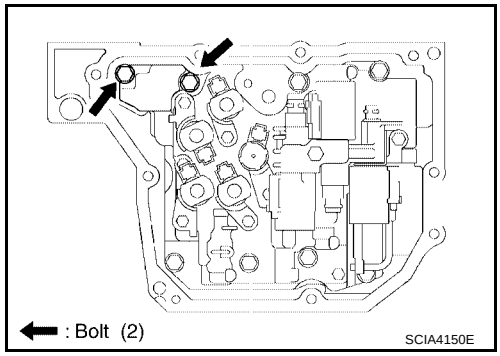

23. Remove suction cover and suction cover gasket.

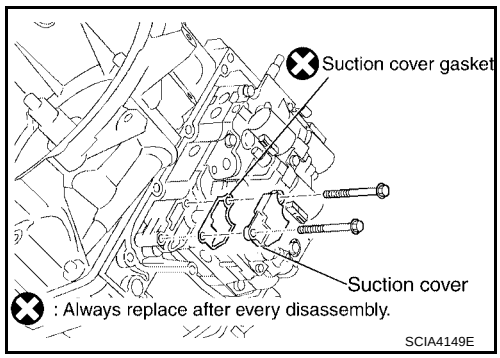

24. Remove control valve assembly tightening bolts from transaxle case.

Bolt symbol	Length mm (in)	Number of bolts
A	55 (2.17)	2
B	50 (1.97)	2
C	16 (0.63)	2

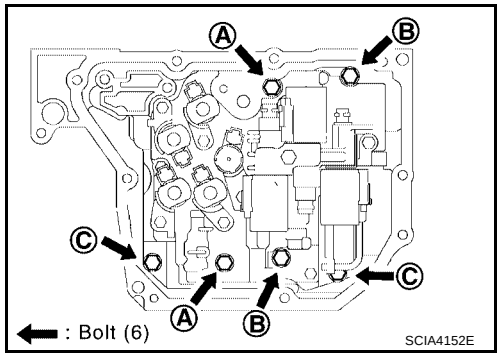

25. While holding control valve assembly, disconnect parking lock rod sub assembly from manual valve lever sub assembly and remove control valve assembly.

    NOTE:
    Shift position is “N”.

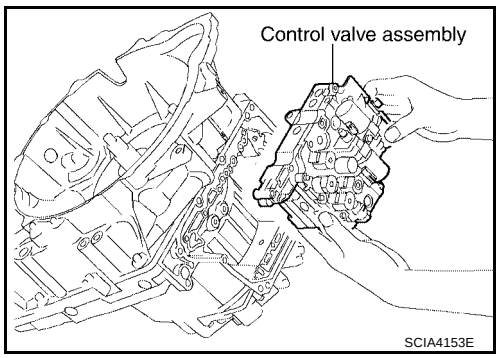

26. Remove governor apply gaskets.

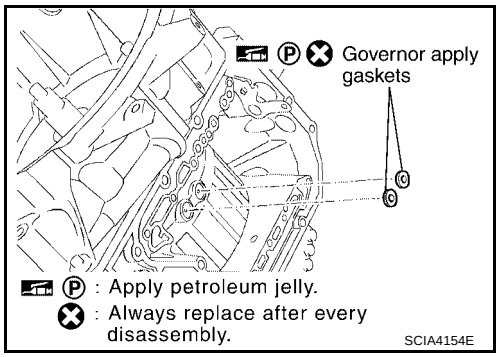

27. Remove transmission wire.

    CAUTION:
    Be careful not to damage solenoid connectors and A/T fluid temperature sensor.

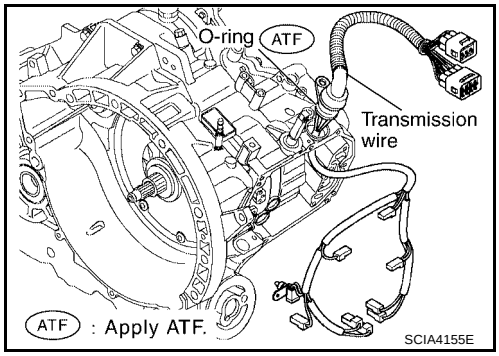

28. Remove oil pump assembly tightening bolts from transaxle case.

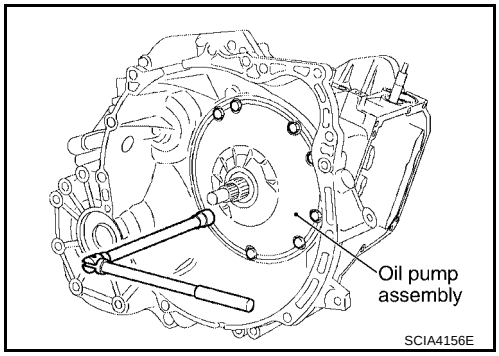

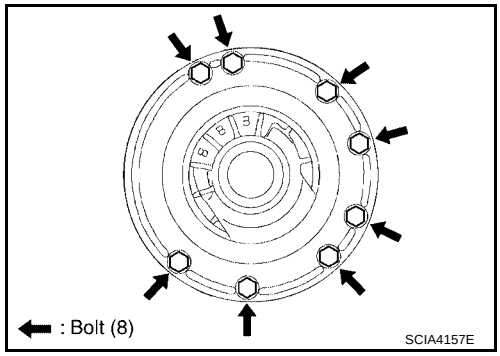

29. Remove oil pump assembly.

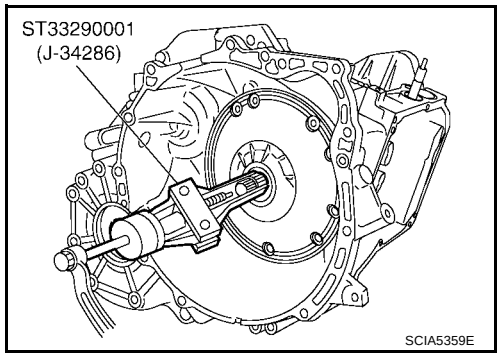

30. Remove oil seal from oil pump assembly.
CAUTION:
Be careful not to scratch oil pump assembly.

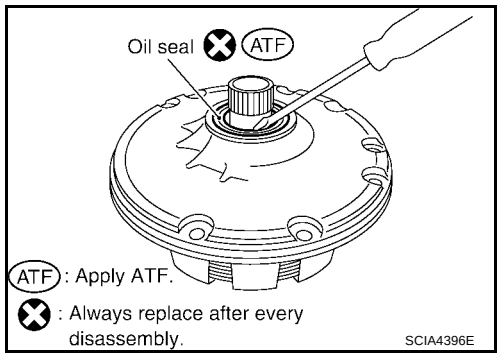

31. Remove one-way clutch outer race sub assembly.
32. Remove thrust washer.

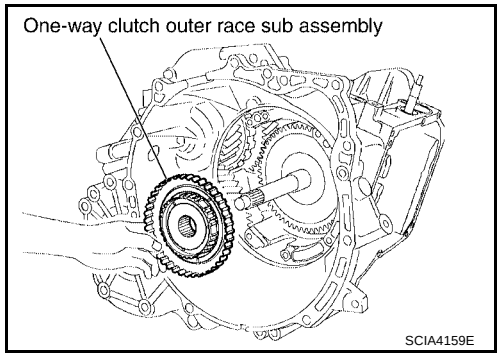

33. Remove transaxle housing tightening bolts from transaxle case.

Bolt symbol	Length mm (in)	Number of bolts
A	30 (1.18)	13
B	35 (1.38)	2
C	45 (1.77)	1
D*	—	1

*:Torx bolt

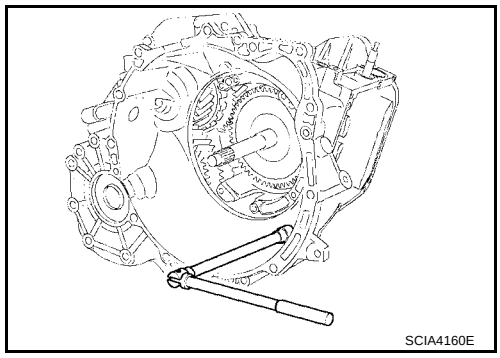

- Manufactured on October 1, 2003 or earlier. Refer to AT-378, "INFORMATION OF SERIAL NUMBER" .

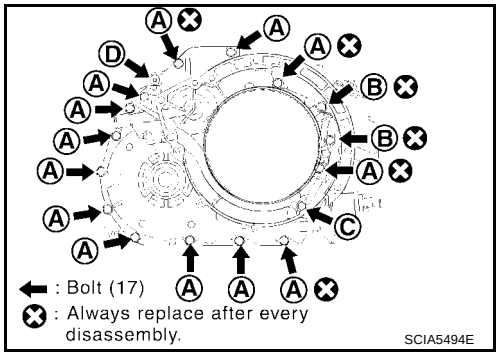

- Manufactured on October 2, 2003 and later. Refer to AT-378, "INFORMATION OF SERIAL NUMBER" .

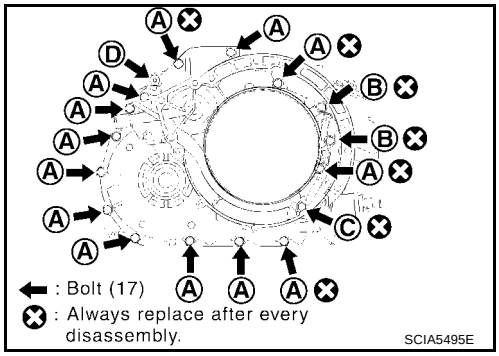

34. Remove transaxle housing using a soft hammer.

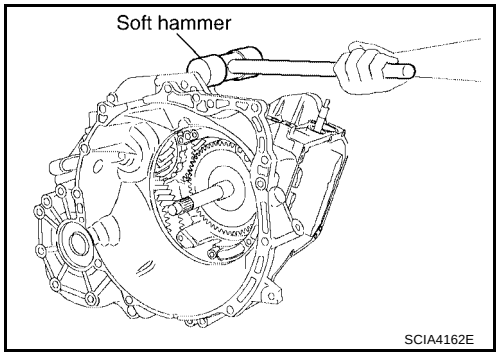

35. Remove governor apply gasket.
36. Remove seal ring.

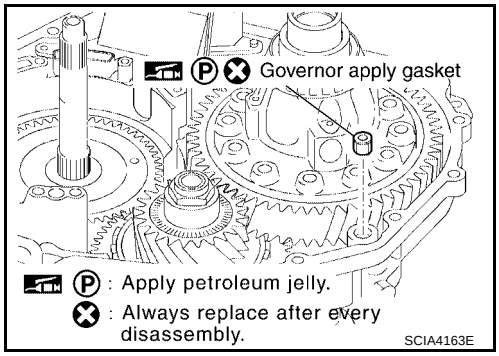

37. Remove tube clamp.

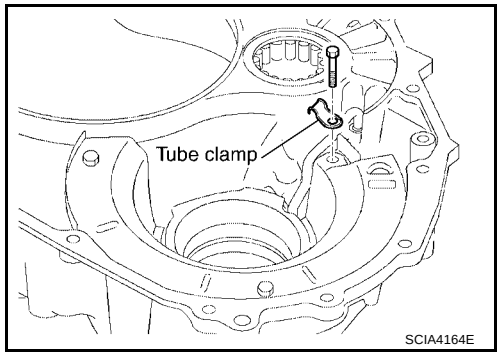

38. Using a flat-bladed screwdriver and remove differential gear lube apply tube.

CAUTION:

- **Be careful not to bend or damage differential gear lube apply tube.**
- **Be careful not to damage transaxle housing.**

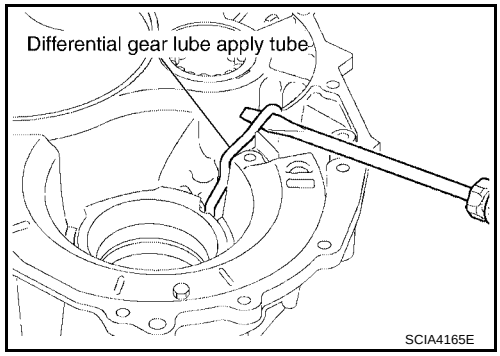

39. Remove oil reservoir plate.

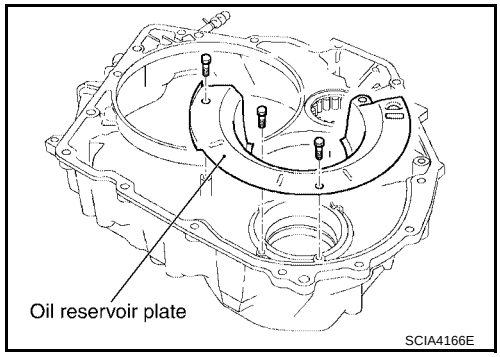

40. Remove oil cleaner magnets from oil reservoir plate.

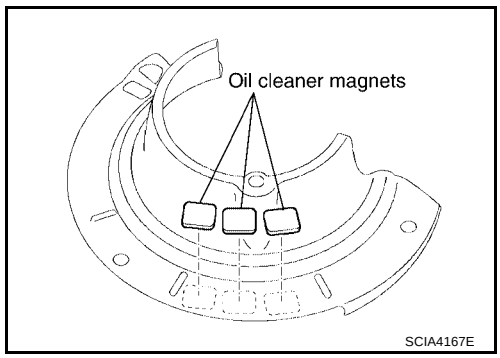

41. Remove differential gear assembly.

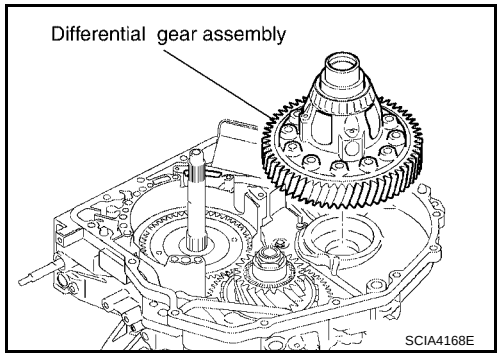

42. Remove oil strainer sub assembly.

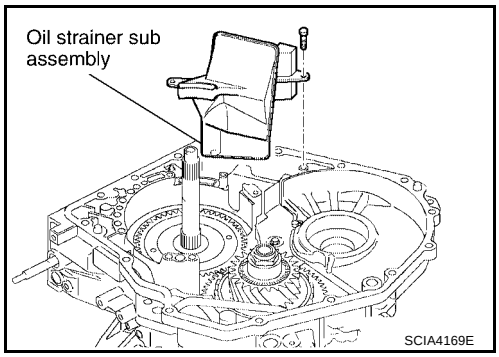

43. Remove oil reservoir plate.

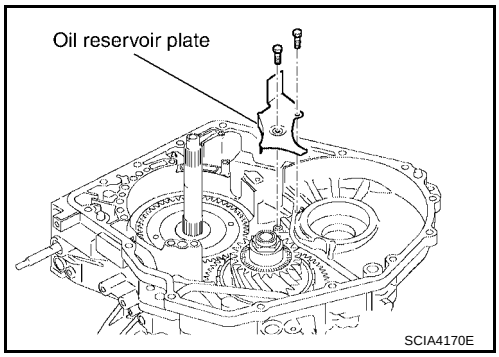

44. Remove tube clamp.

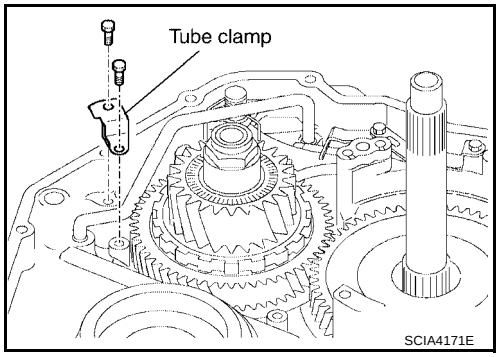

45. Using a flat-bladed screwdriver and remove U/D brake apply tube sub assembly.

CAUTION:

- **Be careful not to bend or damage U/D brake apply tube sub assembly.**
- **Be careful not to damage transaxle case.**

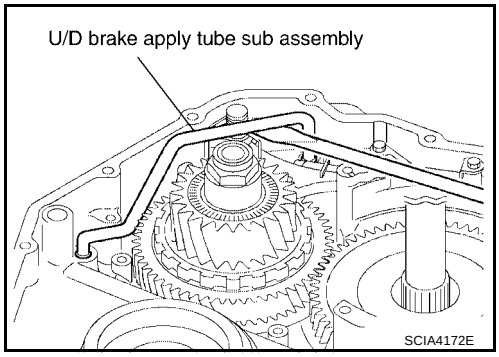

46. Disconnect manual detent spring sub assembly from manual valve lever sub assembly.

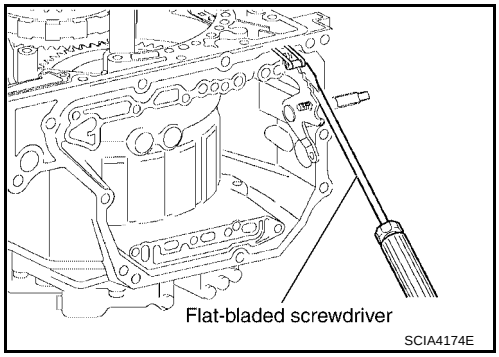

47. Remove manual valve lever sub assembly from parking lock rod sub assembly.

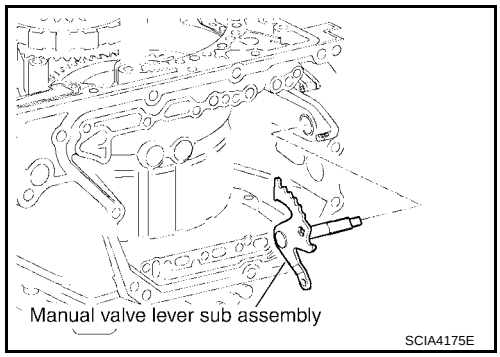

48. Remove parking lock rod sub assembly.

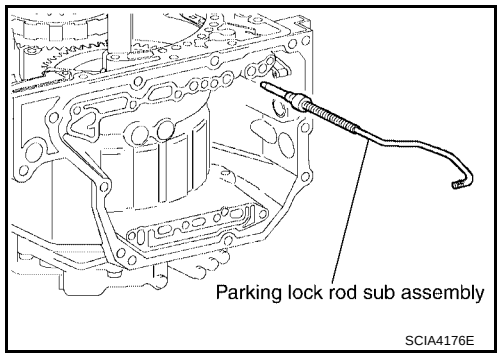

49. Remove tightening bolts for manual detent spring sub assembly.

Bolt symbol	Length mm (in)	Number of bolts
A	16.7 (0.657)	1
B	14.0 (0.551)	1

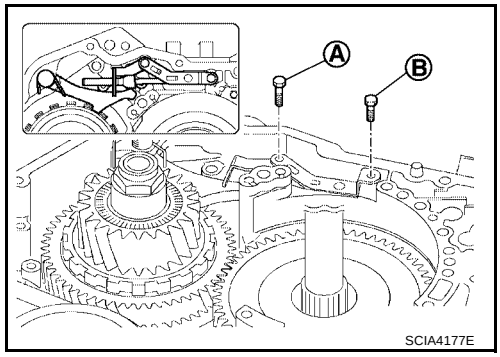

50. Remove manual detent spring sub assembly.

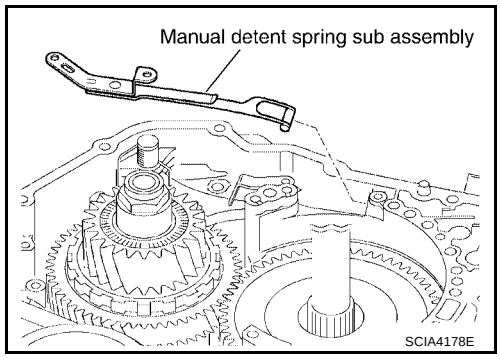

51. Remove parking lock pawl shaft and torsion spring No.1.

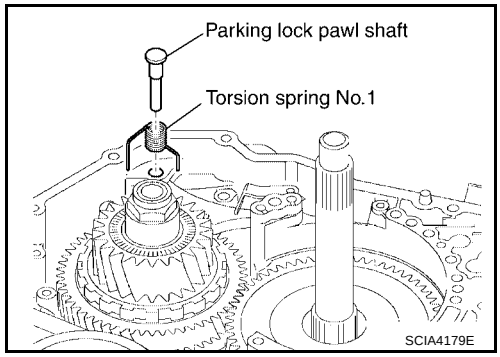

52. Remove parking lock pawl braket and parking lock pawl.

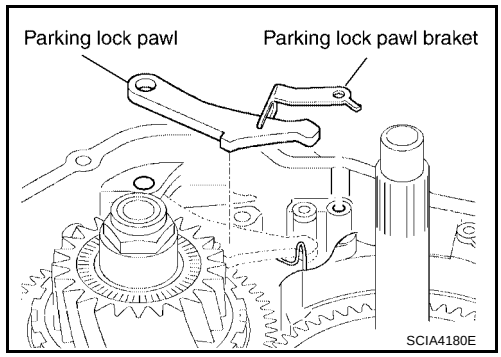

53. Remove parking lockpin sub assembly.

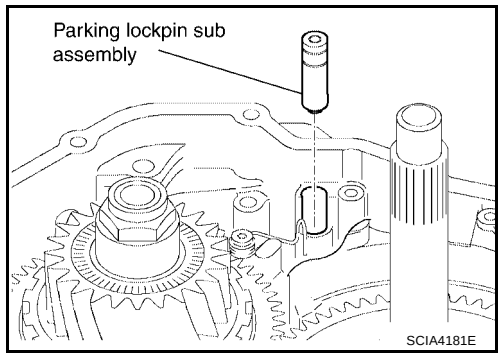

54. Remove spring guide sleeve and torsion spring No.2.

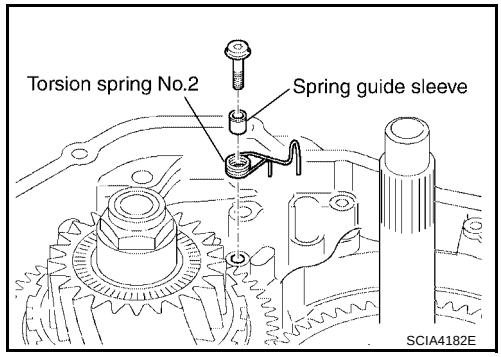

55. Using a flat-bladed screwdriver and remove manual valve oil seal.

CAUTION:
Be careful not to damage transaxle case.

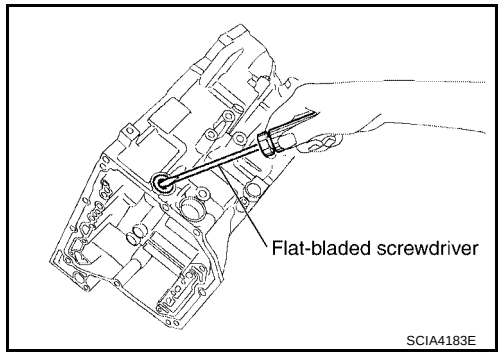

56. Remove thrust needle roller bearing and thrust bearing race from U/D gear assembly.

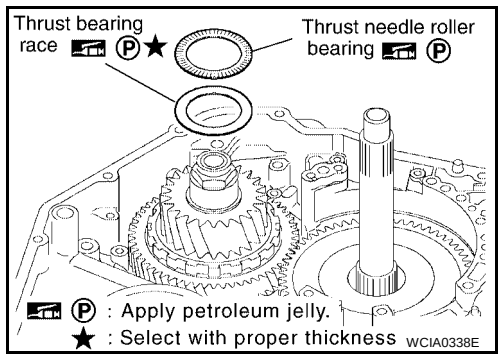

57. Remove U/D gear assembly.
58. Remove seal rings from U/D gear assembly.

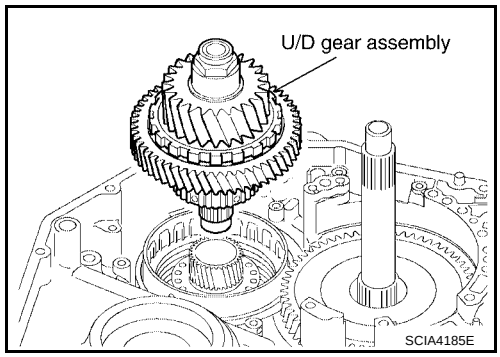

59. Remove U/D clutch assembly.

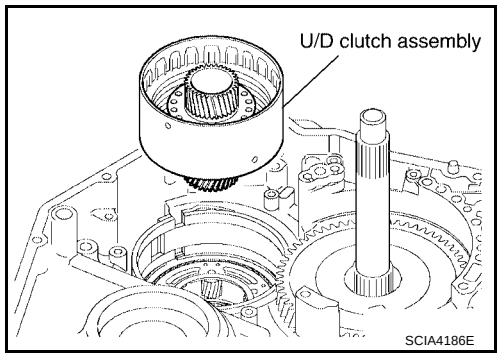

60. Remove anchor bolt.

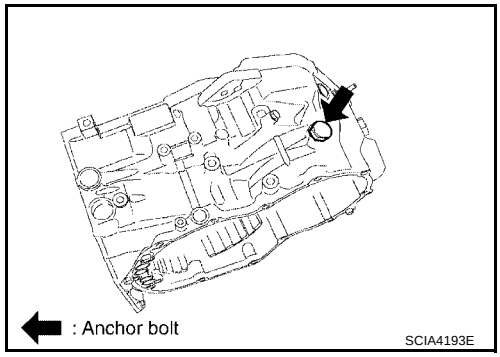

61. Remove U/D brake band assembly.

CAUTION:
Be careful not to damage transaxle case.

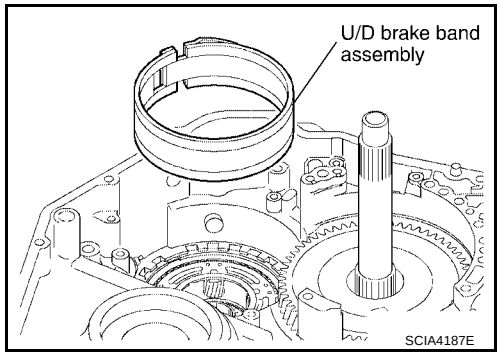

62. Remove U/D RR planetary carrier assembly and thrust bearing races.

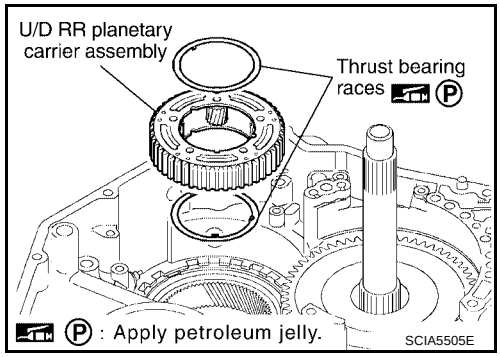

63. Remove U/D RR planetary ring gear sub assembly.
64. Remove thrust needle roller bearing, adjust shim and thrust bearing race from U/D RR planetary ring gear sub assembly.
    - Manufactured on October 1, 2003 or earlier. Refer to AT-378, "INFORMATION OF SERIAL NUMBER" .

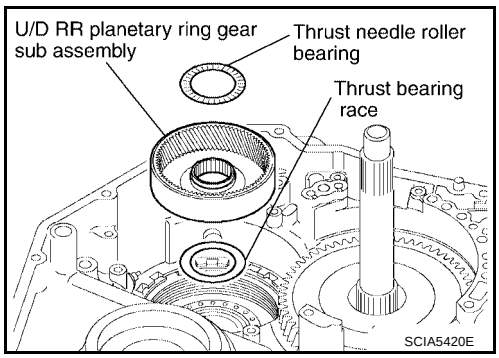

    - Manufactured on October 2, 2003 and later. Refer to AT-378, "INFORMATION OF SERIAL NUMBER" .

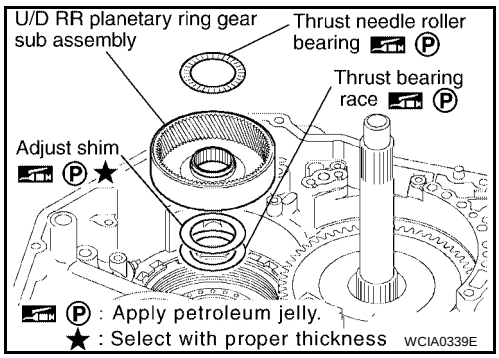

65. Using a snap ring pliers and remove snap ring.

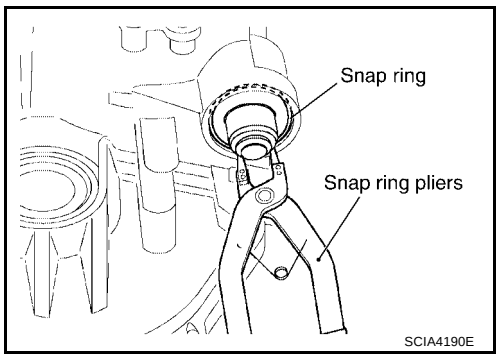

66. Remove U/D brake damper assembly.
67. Remove O-rings from U/D brake damper assembly.

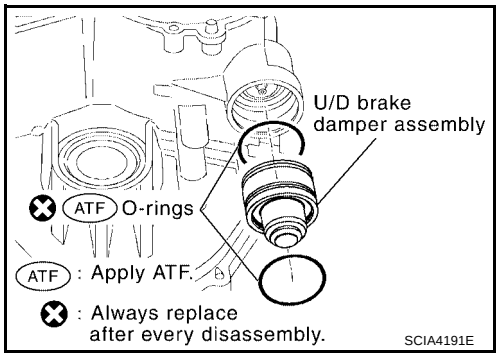

68. Remove U/D brake piston assembly and compression spring.
69. Remove O-ring from U/D brake piston assembly.

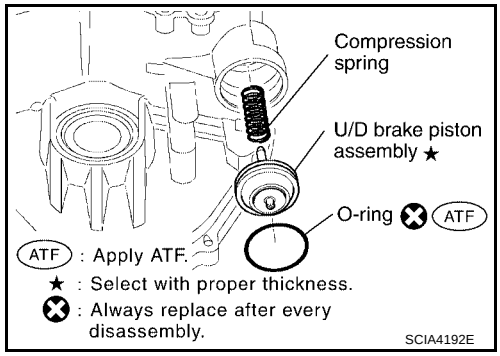

70. Remove transaxle case cover tightening bolts from transaxle case.

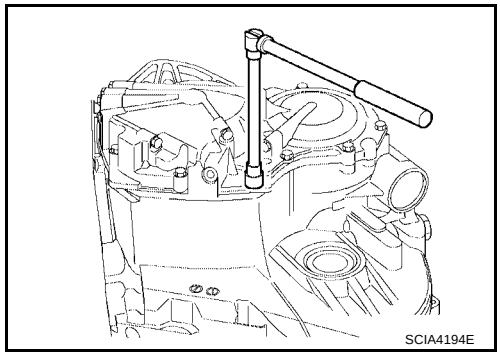

- Manufactured on October 1, 2003 or earlier. Refer to AT-378, "INFORMATION OF SERIAL NUMBER" .

Bolt symbol	Length mm (in)	Number of bolts
A	30 (1.18)	8
B	45 (1.77)	1
C	48 (1.89)	2
D*	—	1

*:Stud bolt

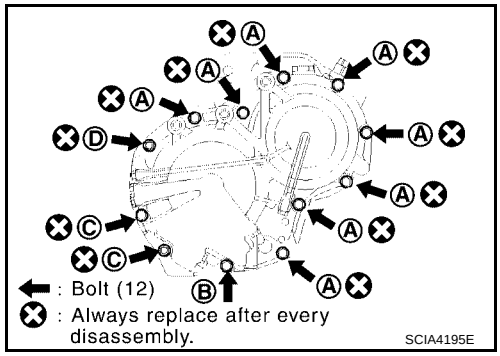

- Manufactured on October 2, 2003 and later. Refer to AT-378, "INFORMATION OF SERIAL NUMBER" .

Bolt symbol	Length mm (in)	Number of bolts
A	30 (1.18)	8
B	45 (1.77)	2
C	48 (1.89)	2
D*	—	1

*:Stud bolt

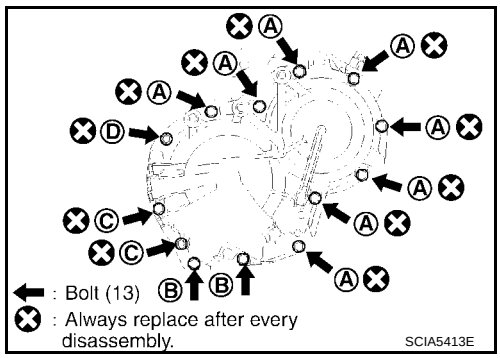

71. Tap transaxle case cover using a soft hammer.

CAUTION:

Be careful not to damage transaxle case cover.

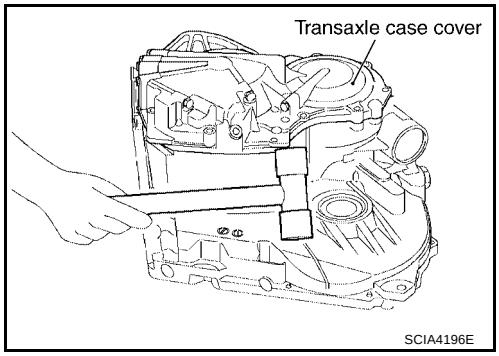

72. Remove transaxle case cover.

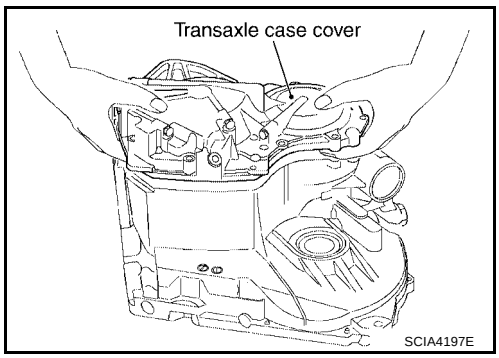

73. Remove governor apply gaskets from transaxle case.

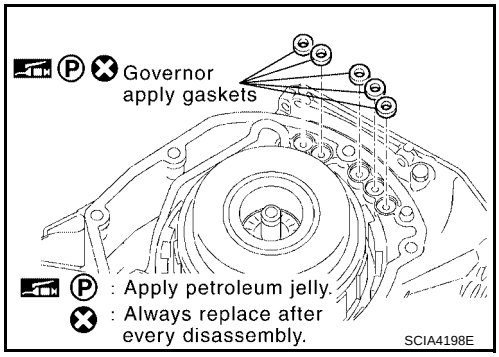

74. Remove tube clamp.

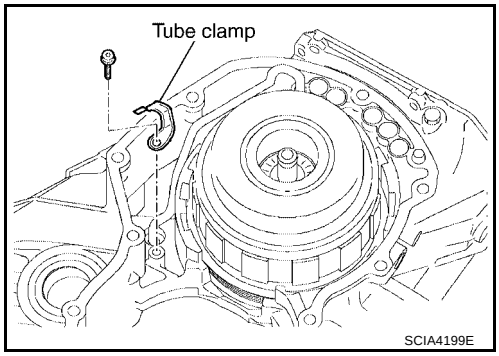

75. Using a flat-bladed screwdriver, remove transaxle lube apply tube.

CAUTION:

- **Be careful not to bend or damage transaxle lube apply tube.**
- **Be careful not to damage transaxle case.**

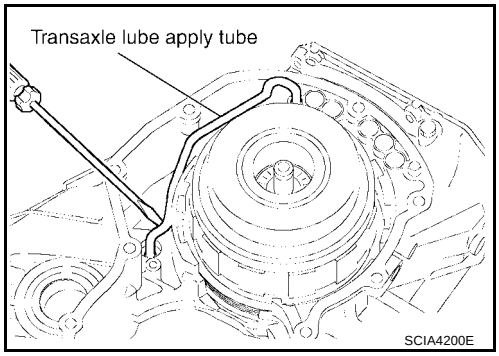

76. Remove forward and direct clutch assembly.
77. Remove thrust bearing race, thrust needle roller bearing and seal ring from forward and direct clutch assembly.

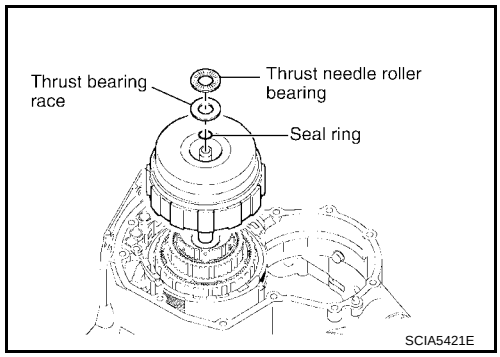

78. Remove planetary sun gear sub assembly and thrust needle roller bearings.

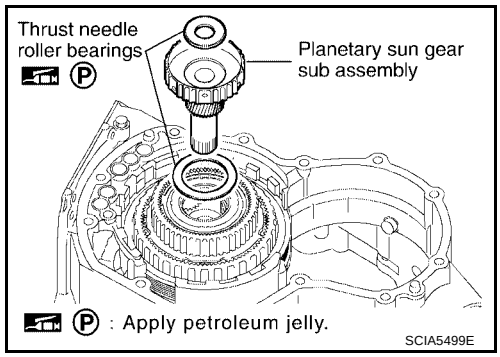

79. Using a bore gauge, measure the inner diameter of planetary sun gear sub assembly bushing.

CAUTION:
Measure at different places and take an average. If it is greater than the maximum, replace it with a new planetary sun gear sub assembly.

Standard	**:22.200 - 22.226mm (0.8740 - 0.8750in)**
Allowable limit	**:22.276 (0.8770in)**

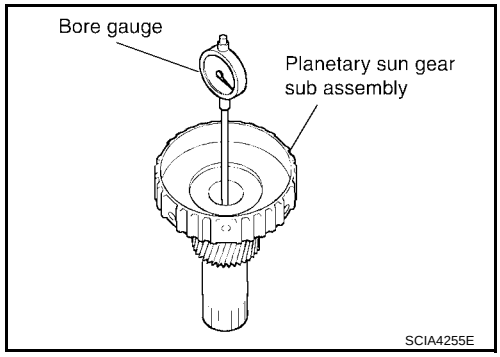

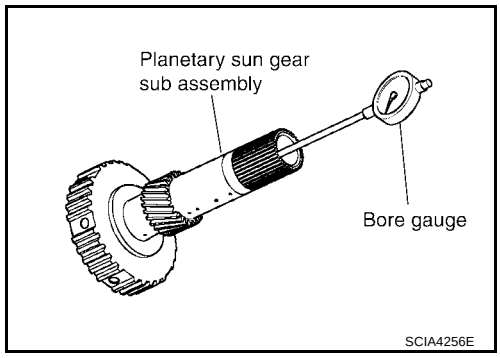

80. Remove RR planetary ring gear assembly.
81. Remove thrust needle roller bearing and thrust bearing race from RR planetary ring gear assembly.

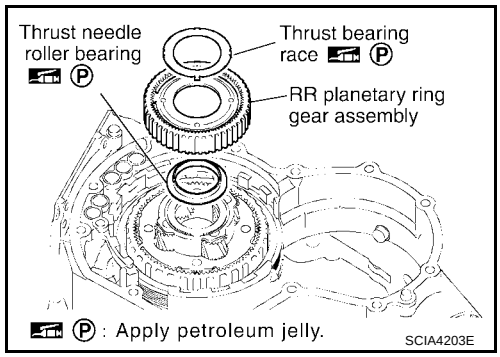

82. Remove planetary gear assembly.
83. Remove thrust bearing race from planetary gear assembly.

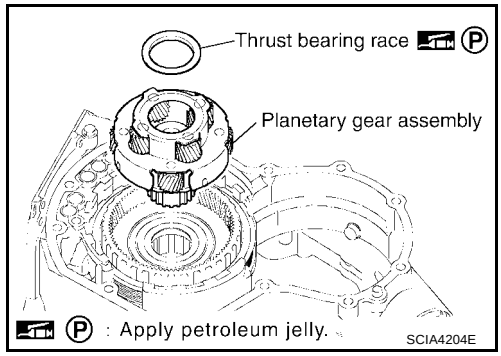

84. Using a bore gauge, measure the inner diameter of planetary gear assembly bushing.

CAUTION:
Measure at different places and take an average. If it is greater than the maximum, replace it with a new planetary gear assembly.

Standard	**:30.056 - 30.082mm (1.1833 - 1.1843in)**
Allowable limit	**:30.132 (1.1863in)**

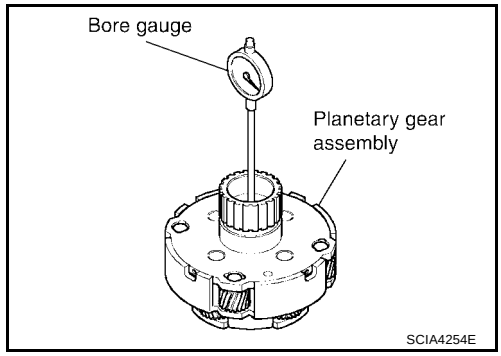

85. Remove thrust bearing.

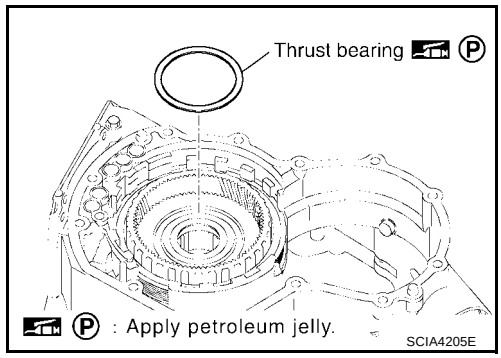

86. Using a flat-bladed screwdriver and remove snap ring.

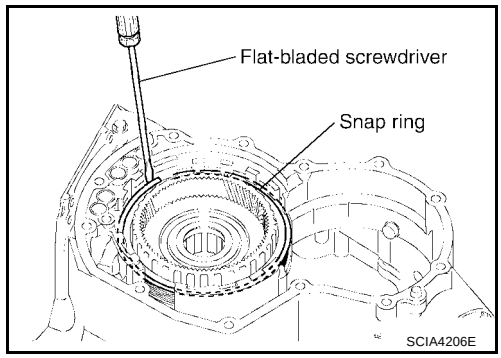

87. Remove 1st and reverse brake flanges, 1st and reverse brake discs and 1st and reverse brake plates.
   - INSPECTION
   - Check that the sliding surface of discs are not worn and burnt. If necessary, replace them.

CAUTION:
Replace new discs by soaking them at least 2 hours in A/T fluid.

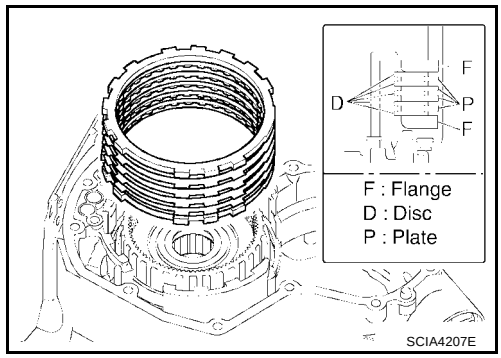

88. Remove FR planetary ring gear assembly with one-way clutch No.2.

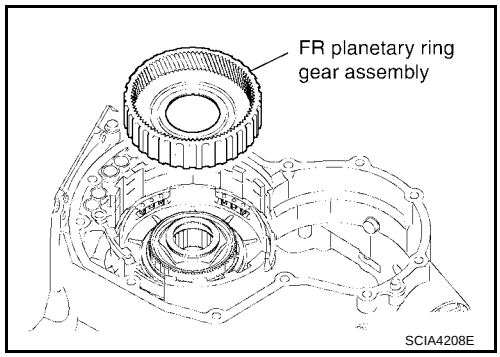

89. Make sure that the FR planetary ring gear assembly should turn freely counterclockwise and should lock clockwise.

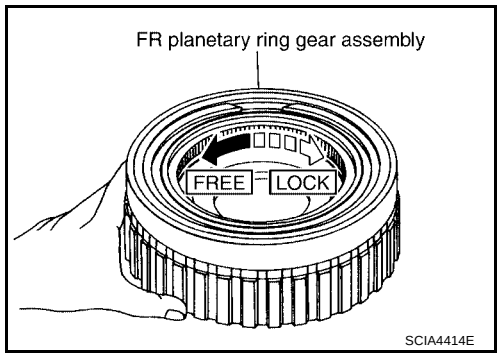

90. Using a flat-bladed screwdriver and remove snap ring.

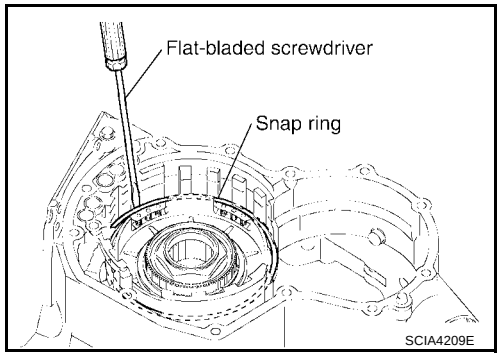

91. Remove return spring.

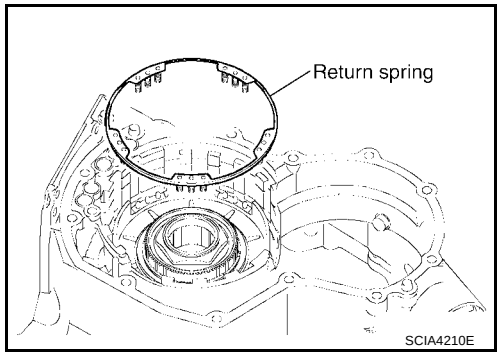

92. While pushing the piston by hand, apply compressed air (4Kg/cm^2) into the oil passage of transaxle case as shown in the figure and remove 1st and reverse brake piston.

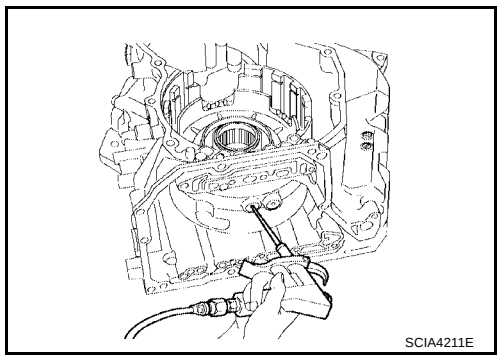

93. Remove O-rings from 1st and reverse brake piston.

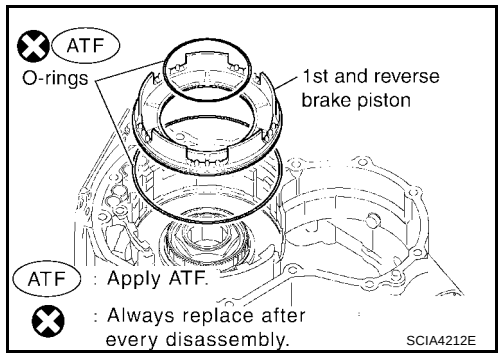

94. Remove thrust bearing and thrust bearing race from counter drive gear sub assembly.

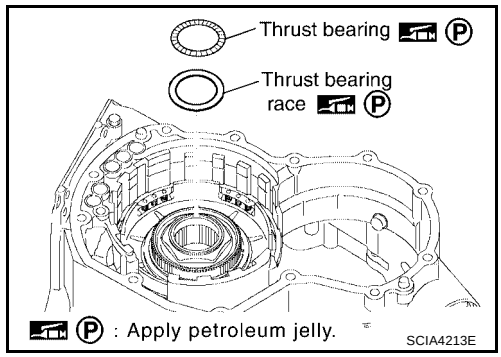

95. Using a snap ring pliers and remove snap ring.

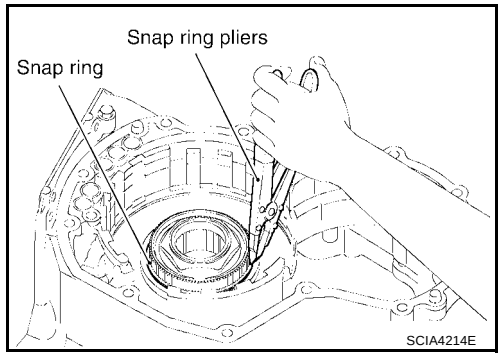

96. Remove counter drive gear sub assembly.

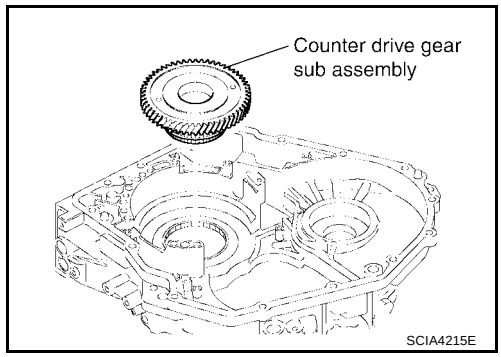

97. Using a flat-bladed screwdriver remove differential side oil seal from transaxle case and transaxle housing.

CAUTION:

Be careful not to scratch transaxle case and transaxle housing.

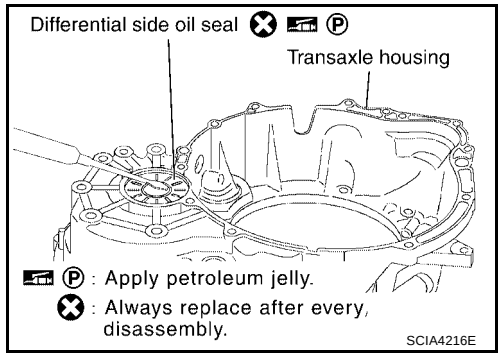

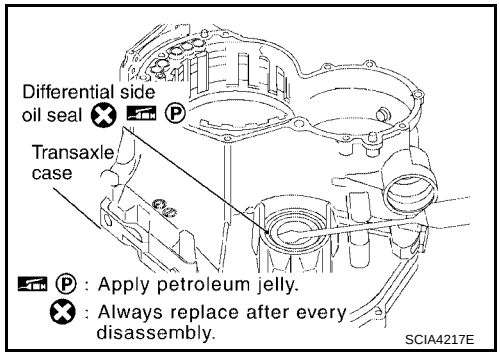

98. Remove outer race and adjust shim from transaxle case.

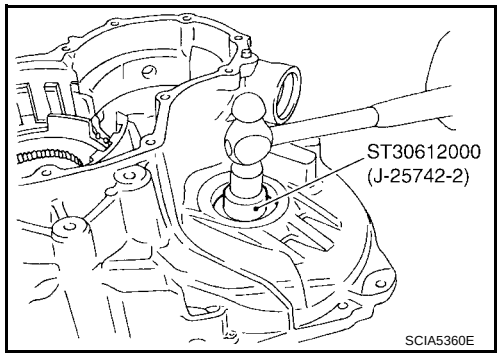

99. Remove thrust roller bearing from transaxle housing.

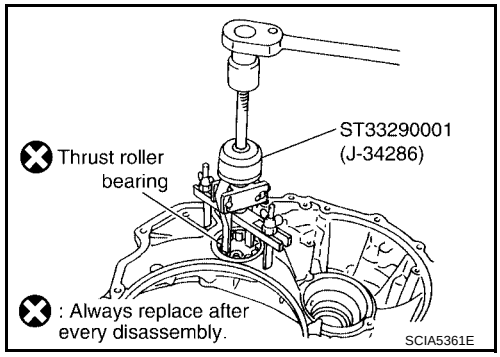

REPAIR FOR COMPONENT PARTS

PFP:00000

Oil Pump, 2nd Coast Brake & 2nd Brake

UCS002L3

COMPONENTS

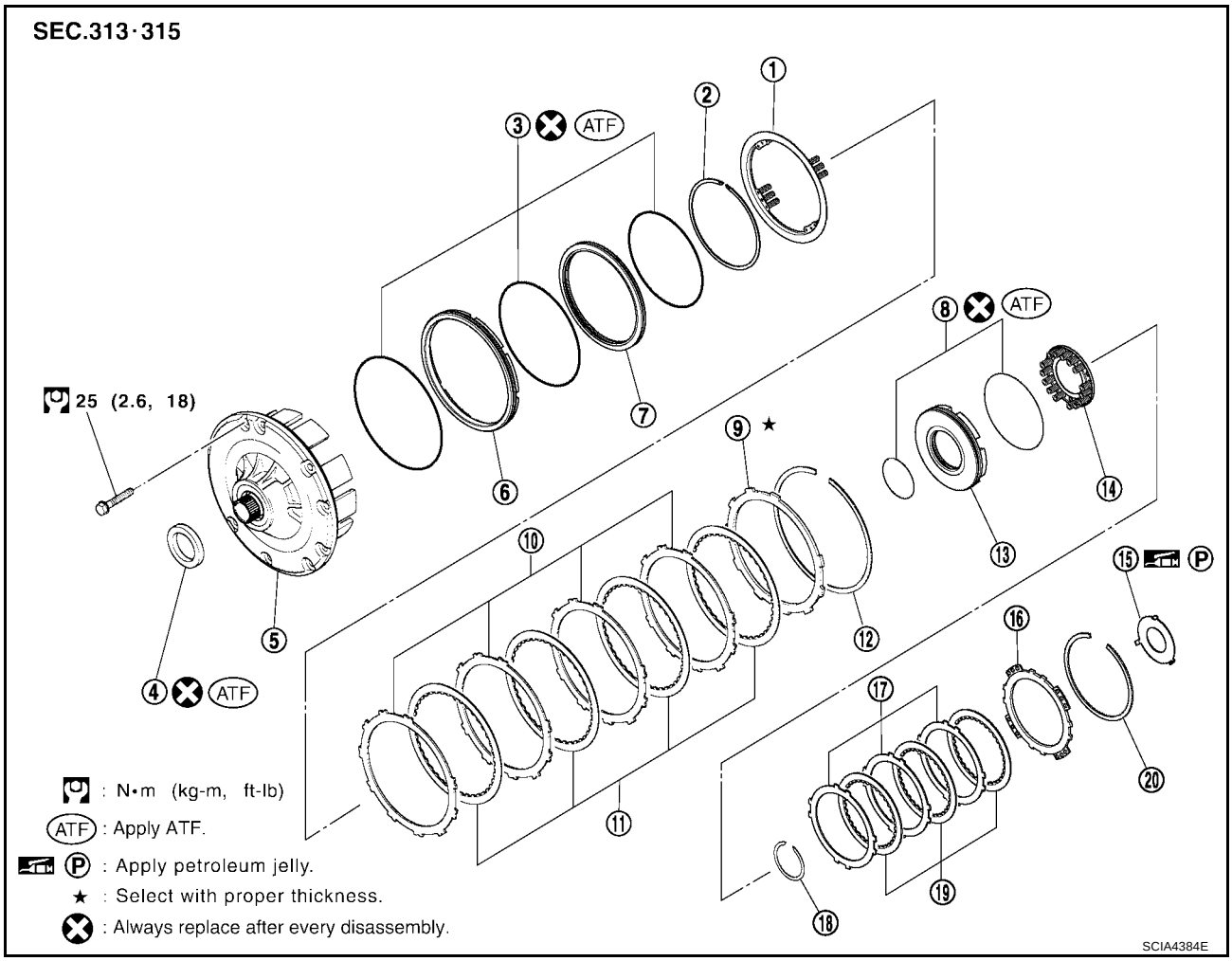

1.	Return spring	2.	Snap ring	3.	O-ring
4.	Oil seal	5.	Oil pump assembly	6.	2nd brake piston
7.	2nd brake sleeve	8.	O-ring	9.	2nd brake flange
10.	2nd brake plate	11.	2nd brake disc	12.	Snap ring
13.	2nd coast brake piston	14.	Return spring	15.	Thrust washer
16.	2nd coast brake flange	17.	2nd coast brake plate	18.	Snap ring
19.	2nd coast brake disc	20.	Snap ring		

DISASSEMBLY

1. Remove oil seal from oil pump assembly.

   CAUTION:
   Be careful not to scratch oil pump assembly.

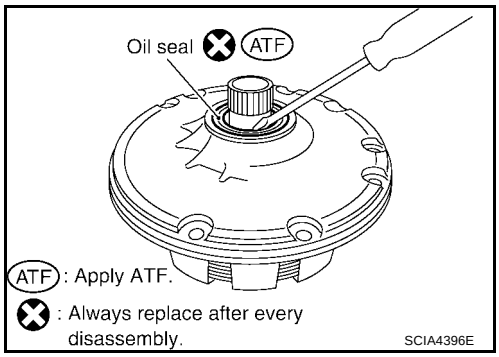

2. Remove thrust washer from oil pump assembly.

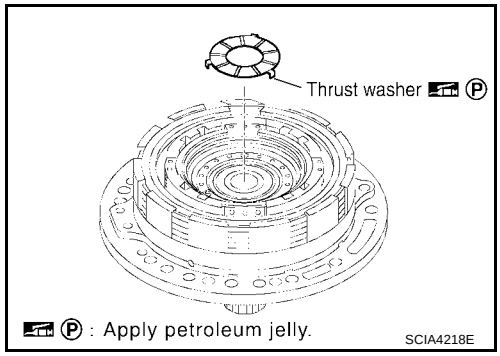

3. Using a flat-bladed screwdriver and remove snap ring.

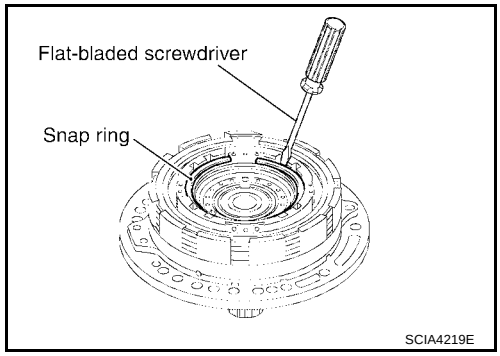

4. Remove 2nd coast brake flange, 2nd coast brake discs and 2nd coast brake plates.

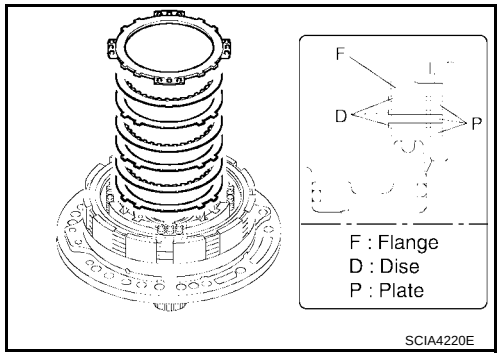

5. Place clutch spring compressor on return spring, and compress return spring with a press.
6. Using a snap ring pliers and remove snap ring.

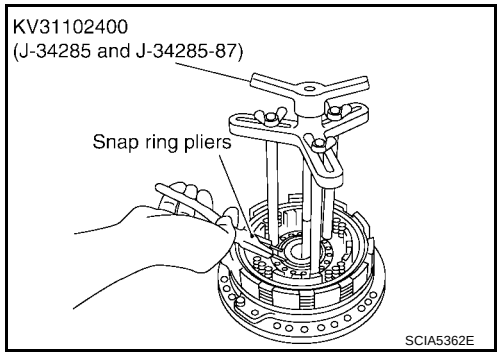

7. Remove return spring.

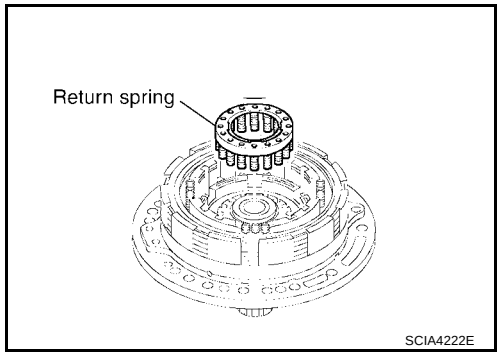

8. While pushing the 2nd coast brake piston by hand, apply compressed air (4kg/cm^2) into the oil passage as shown in the figure and remove 2nd coast brake piston.

   CAUTION:
   Be careful not to damage the O-ring and 2nd coast brake piston.

9. Remove O-rings from 2nd coast brake piston.

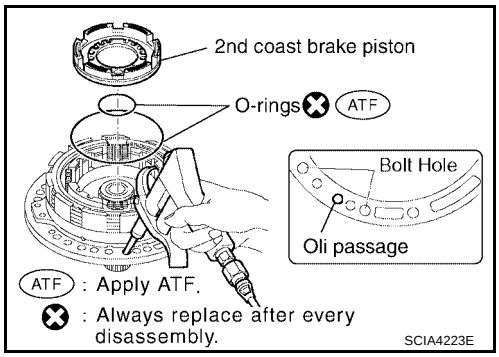

10. Using a flat-bladed screwdriver and remove snap ring.

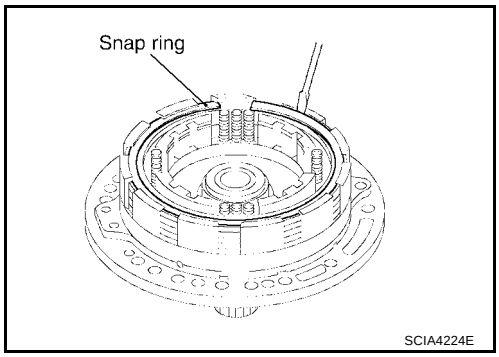

11. Remove 2nd brake flange, 2nd brake discs and 2nd brake plates.

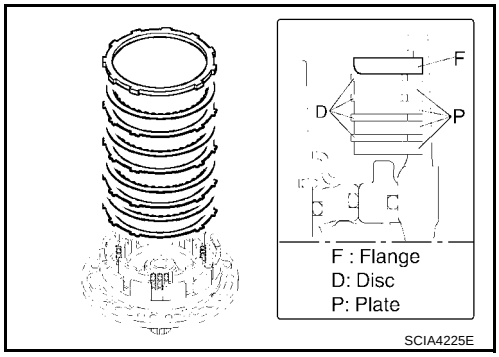

12. Remove return spring.

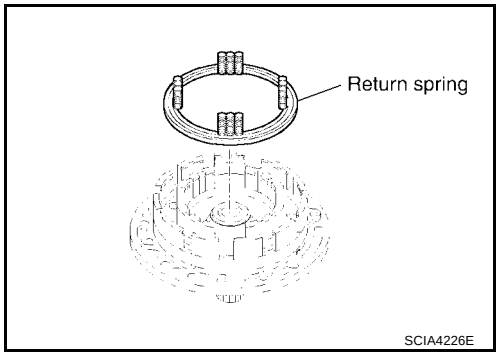

13. Using a flat-bladed screwdriver and remove snap ring.

    CAUTION:
    Be careful not to damage oil pump assembly and 2nd brake piston.

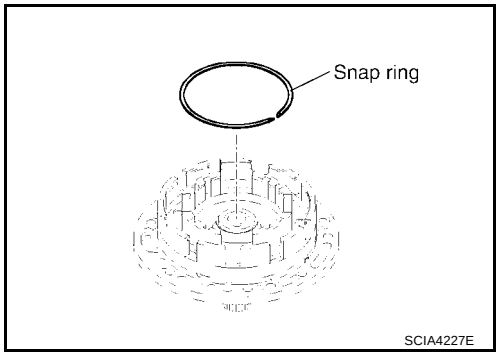

14. While pushing the 2nd brake piston by hand, apply compressed air (4kg/cm^2) into the oil passage as shown in the figure and remove 2nd brake piston (With 2nd brake sleeve).

    CAUTION:
    Be careful not to damage 2nd brake piston and 2nd brake sleeve.
15. Remove O-rings from 2nd brake piston and 2nd brake sleeve.

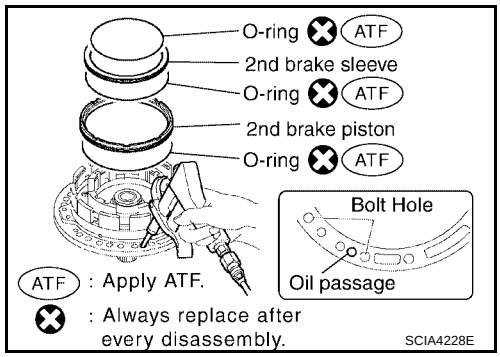

INSPECTION

- Check that the sliding surface of discs and plates is not worn or burnt. If the discs or plates is worn or burnt, replace it

  CAUTION:
  Replace new clutch discs by soaking them at least 2 hours in ATF.

ASSEMBLY

1. Install O-rings in 2nd brake sleeve and 2nd brake piston.

   CAUTION:
   - **Do not reuse O-ring.**
   - **Apply ATF to O-ring.**
2. Coat the inner surfaces of oil pump assembly with ATF.
3. Press 2nd brake piston and 2nd brake sleeve into oil pump assembly.

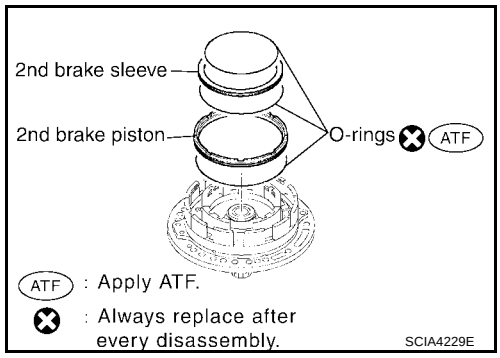

4. Using a flat-bladed screwdriver and install snap ring.

   CAUTION:
   Be careful not to damage oil pump assembly.

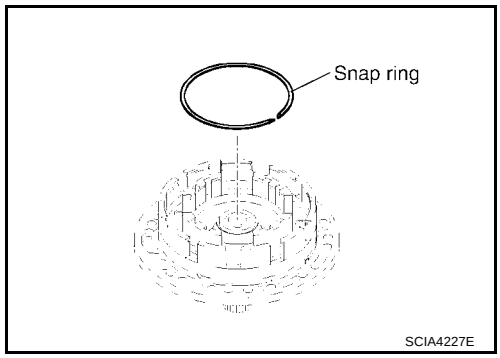

5. Place return spring on 2nd brake piston with the spring side up.

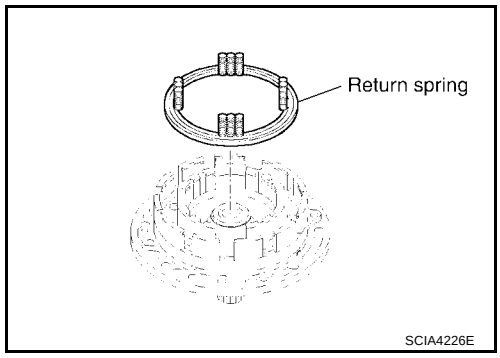

6. Install 2nd brake flange, 2nd brake discs and 2nd brake plates.

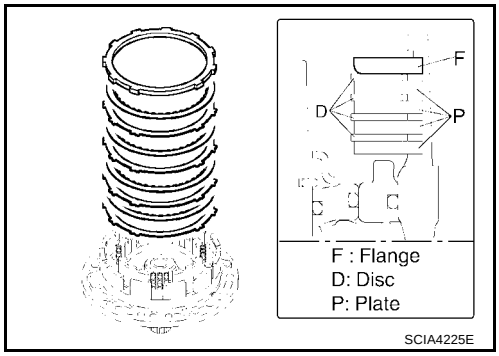

7. Using a flat-bladed screwdriver and install snap ring.

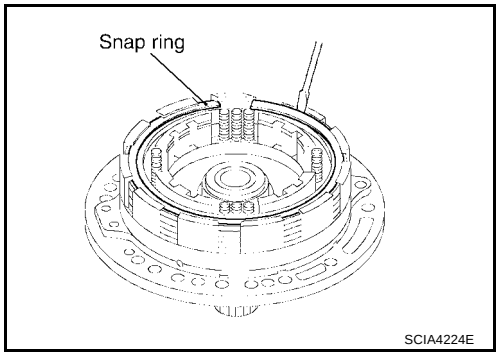

8. Install O-rings in 2nd coast brake piston.

   CAUTION:
   - **Do not reuse O-rings.**
   - **Apply ATF to O-rings.**
9. Coat the inner surfaces of oil pump assembly with ATF.
10. Press 2nd coast brake piston into oil pump assembly.

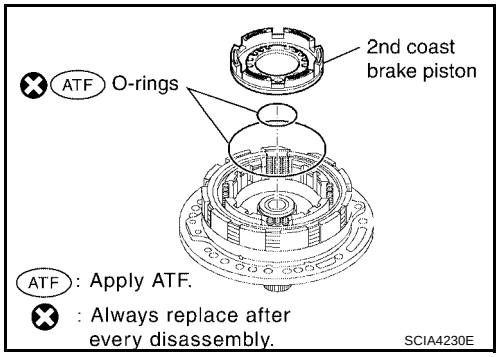

11. Install return spring.

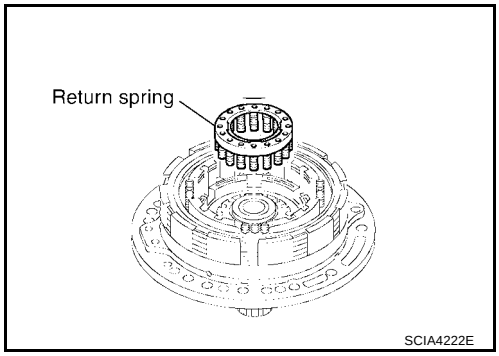

12. Place clutch spring compressor on return spring, and compress return spring with a press.
13. Using a snap ring pliers and install snap ring.

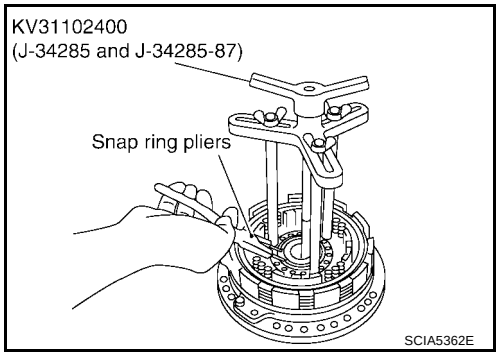

14. Install 2nd coast brake flange, 2nd coast brake discs and 2nd coast brake plates.

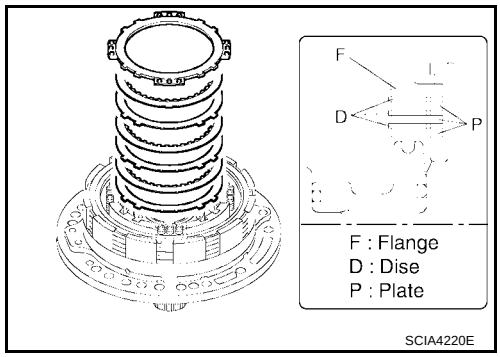

15. Place clutch spring compressor on 2nd coast brake flange, and compress return spring with a press.
16. Using a flat-bladed screwdriver and install snap ring.

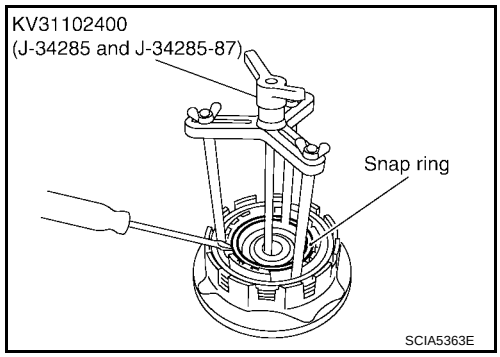

17. Set a dial indicator as shown in the figure.
18. When applying compressed air (4Kg/cm^2) into the oil passage as shown, measure 2nd brake piston stroke and check 2nd brake piston moves smoothly.

    Piston stroke :1.10 - 1.50mm (0.0433 - 0.0591in)

    If 2nd brake piston stroke is out standards, select another flange. Refer to AT-697, "2ND BRAKE" .

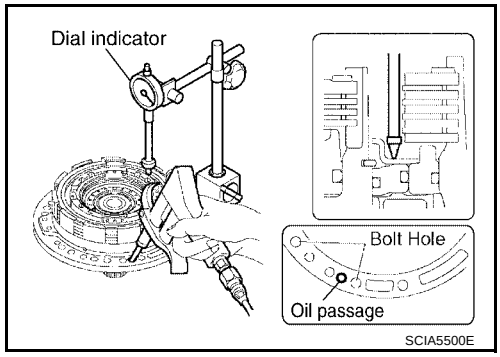

19. Set a dial indicator as shown in the figure.
20. When applying compressed air (4Kg/cm^2) into the oil passage as shown, measure 2nd coast brake piston stroke and check 2nd coast brake piston moves smoothly.

    Piston stroke :0.76 - 1.44mm (0.0299 - 0.0567in)

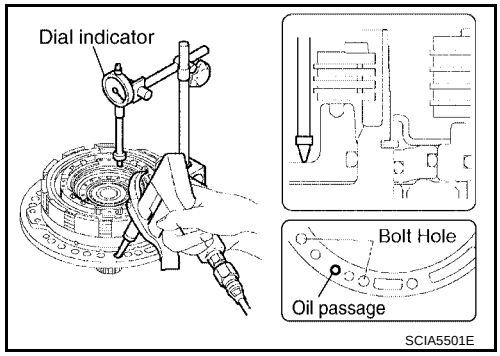

21. Install thrust washer facing the flat surface up.

    CAUTION:
    Apply petroleum jelly to thrust washer.

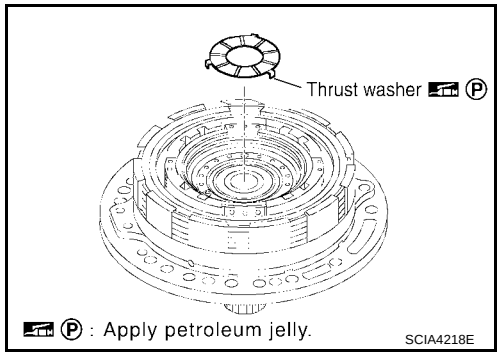

22. Install oil seal into oil pump assembly until it is flush.

CAUTION:
- **Do not reuse oil seal.**
- **Apply ATF to oil seal.**

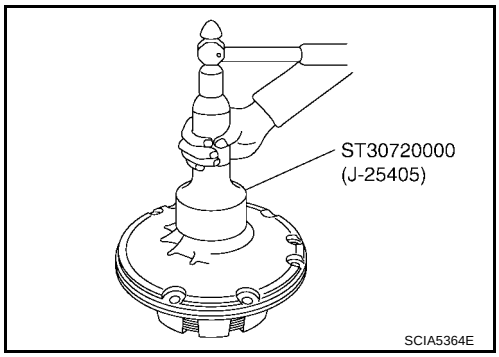

One-Way Clutch Outer Race Sub Assembly & 2nd Coast Brake Hub & One-Way Clutch No.1

UCS002L4

COMPONENTS

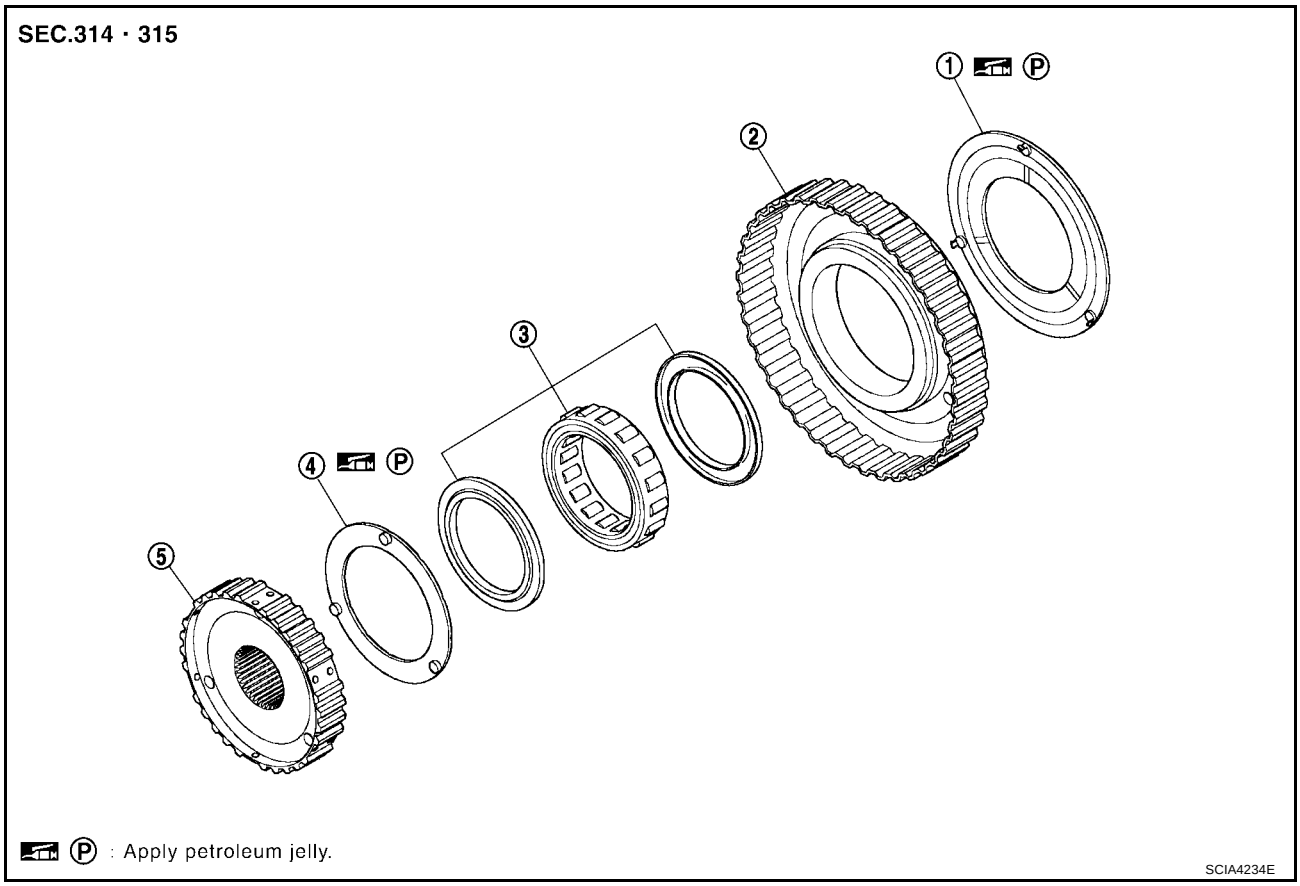

1. Thrust washer
2. One-way clutch outer race sub assembly
3. One-way clutch No.1
4. Thrust washer
5. 2nd coast brake hub

DISASSEMBLY

1. Remove thrust washer from one-way clutch outer race sub assembly.

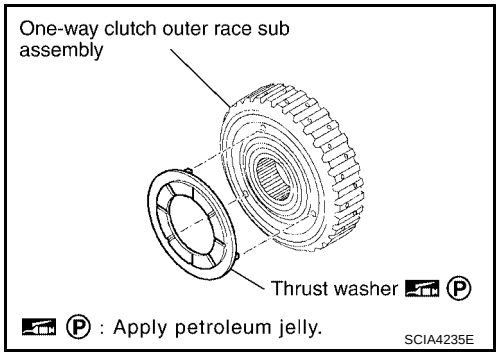

2. Remove 2nd coast brake hub from one-way clutch outer race sub assembly.
3. Remove thrust washer from 2nd coast brake hub.

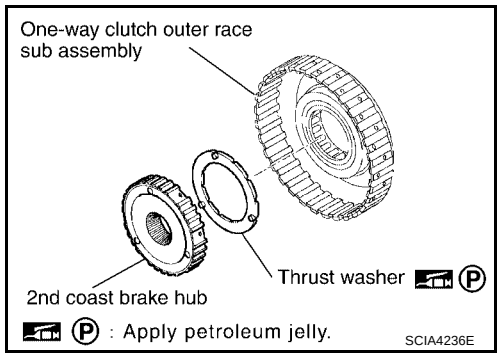

4. Remove one-way clutch No.1 from one-way clutch outer race sub assembly.

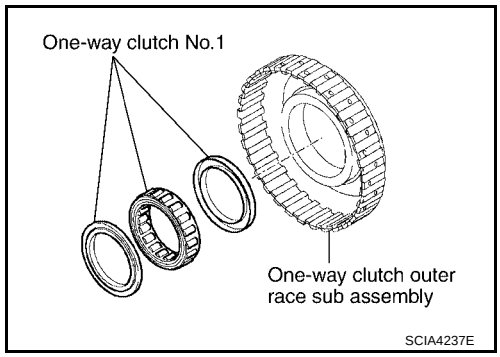

ASSEMBLY

1. Install one-way clutch No.1 into the one-way clutch outer race sub assembly.

   CAUTION:
   Do not mistake the direction of one-way clutch No.1.

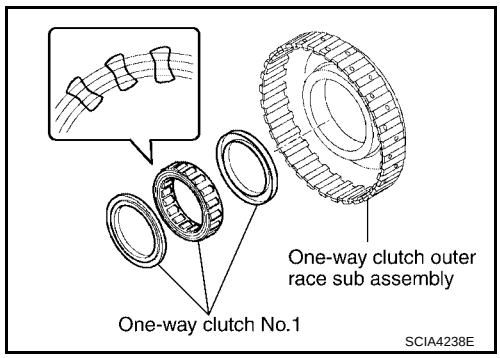

2. Install thrust washer into 2nd coast brake hub.

   CAUTION:
   Coat the thrust washer with petroleum jelly. Align the tab of the washer with the hollow of the 2nd coast brake hub.
3. Install 2nd coast brake hub into one-way clutch outer race sub assembly.

   CAUTION:
   While turning the 2nd coast brake hub, slide it into one-way clutch outer race sub assembly.

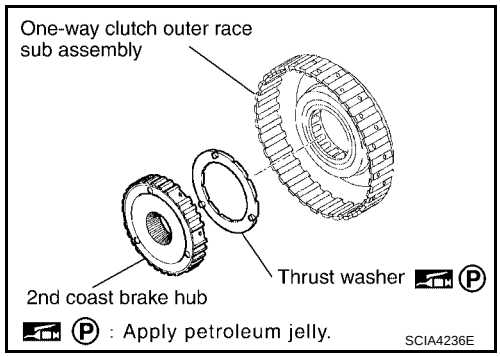

4. Coat the thrust washer with petroleum jelly. Align the tab of the washer with the hollow of the one-way clutch outer race sub assembly.

   CAUTION:
   Apply petroleum jelly to thrust washer.

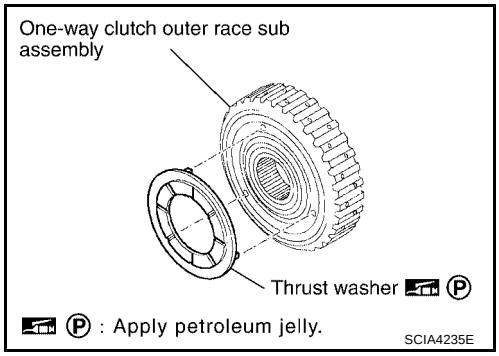

INSPECTION

- Hold one-way clutch outer race sub assembly, and check that 2nd coast brake hub should turn freely clockwise and should lock counterclockwise.

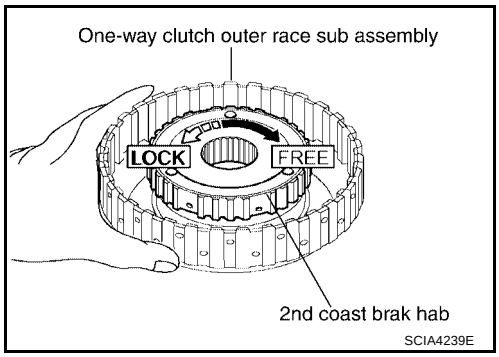

Transaxle Case Cover & B5 Brake

UCS002L5

COMPONENTS

Manufactured on October 1, 2003 or earlier

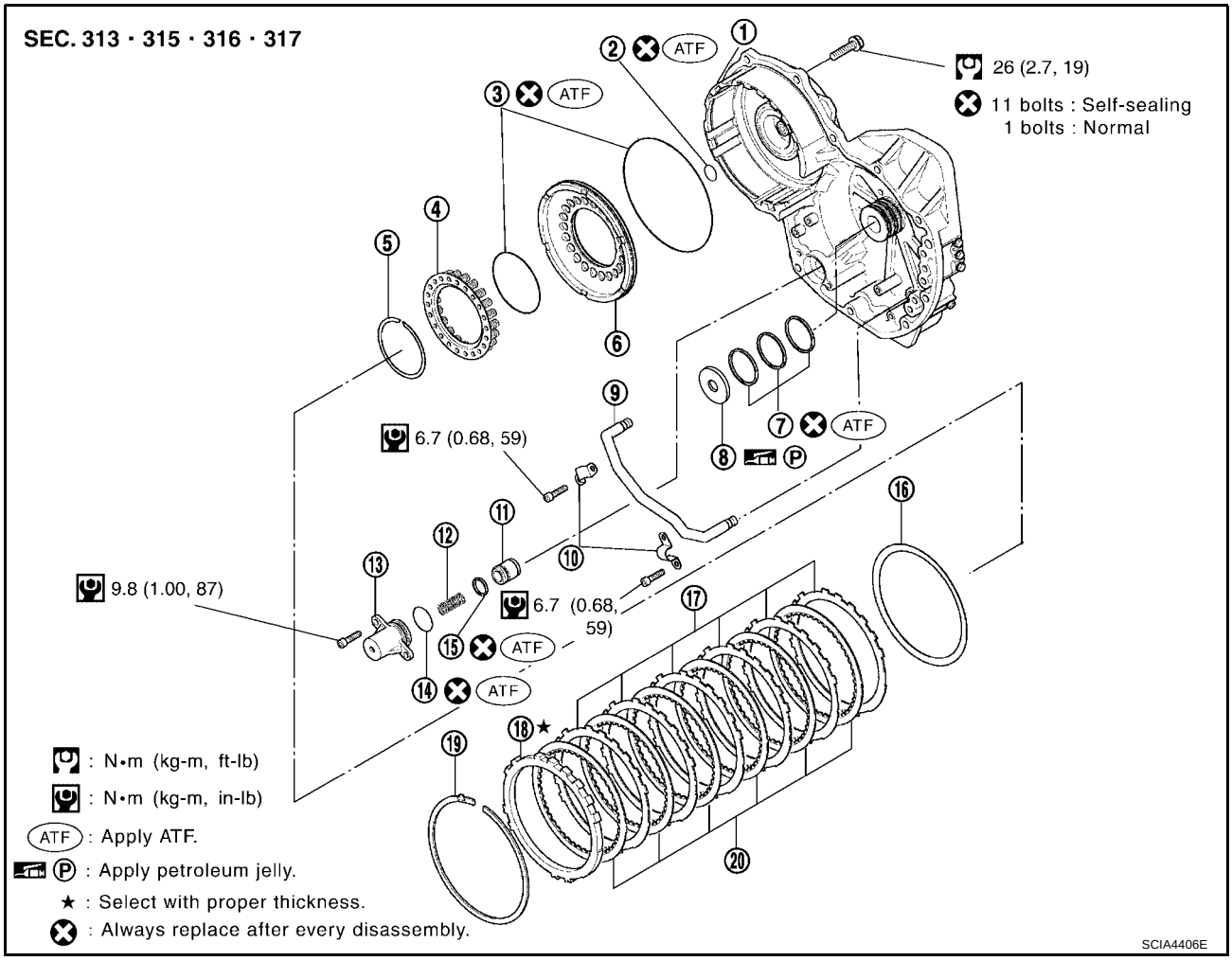

1.	Transaxle case cover	2.	Seal ring	3.	O-ring
4.	Return spring	5.	Snap ring	6.	B5 brake piston
7.	Seal ring	8.	Bearing race	9.	U/D clutch apply tube sub assembly
10.	Tube clamp	11.	Forward clutch accumulator piston	12.	Compression spring
13.	Accumulator cover	14.	O-ring	15.	Seal ring
16.	B5 brake cushion plate	17.	B5 brake plate	18.	B5 brake flange
19.	Snap ring	20.	B5 brake disc		

Manufactured on October 2, 2003 and later

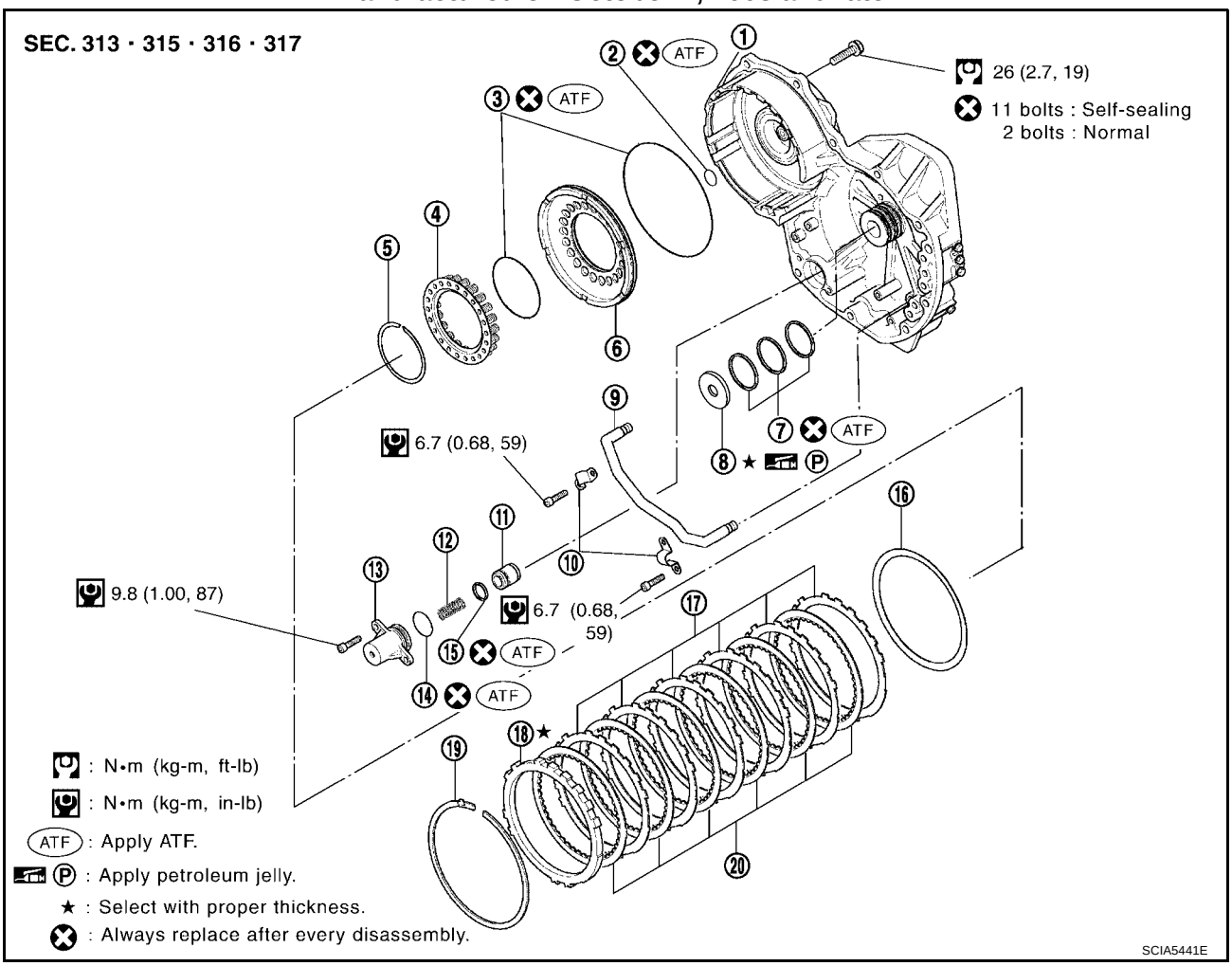

1. Transaxle case cover	2. Seal ring	3. O-ring
4. Return spring	5. Snap ring	6. B5 brake piston
7. Seal ring	8. Bearing race	9. U/D clutch apply tube sub assembly
10. Tube clamp	11. Forward clutch accumulator piston	12. Compression spring
13. Accumulator cover	14. O-ring	15. Seal ring
16. B5 brake cushion plate	17. B5 brake plate	18. B5 brake flange
19. Snap ring	20. B5 brake disc	

DISASSEMBLY

1. Remove tube clamps.

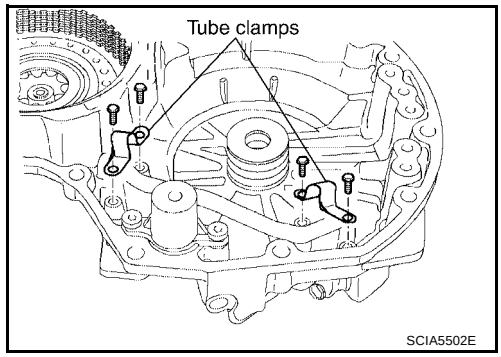

2. Using a flat-bladed screwdriver and remove U/D clutch apply tube sub assembly.

CAUTION:
Be careful not to damage the U/D clutch apply tube sub assembly and transaxle case cover.

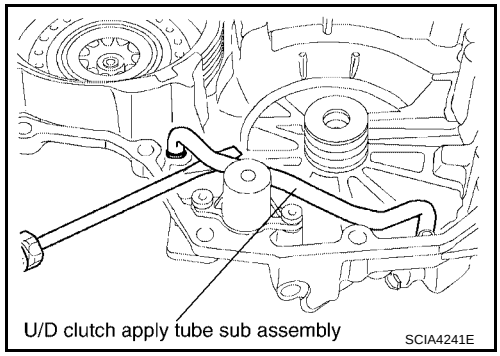

3. Remove bearing race and seal rings from transaxle case cover.

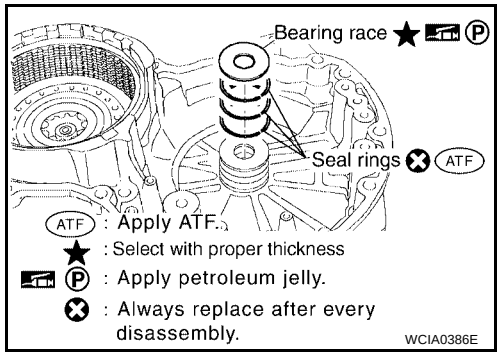

4. Remove accumulator cover, compression spring and forward clutch accumulator piston.
5. Remove O-ring from the accumulator cover.
6. Remove seal ring from the forward clutch accumulator piston.

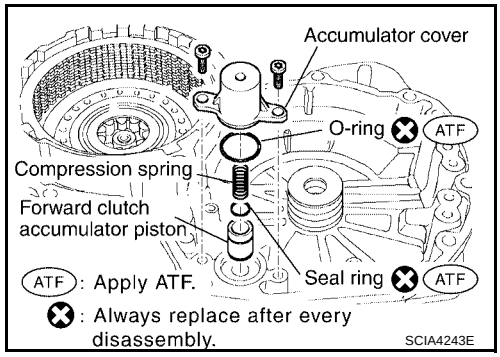

7. Using a flat-bladed screwdriver and remove snap ring.

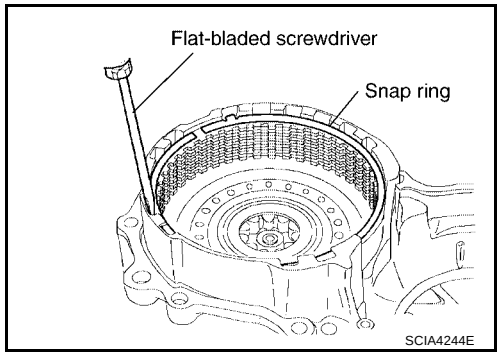

8. Remove B5 brake flange, B5 brake discs, B5 brake plates and B5 brake cushion plate.

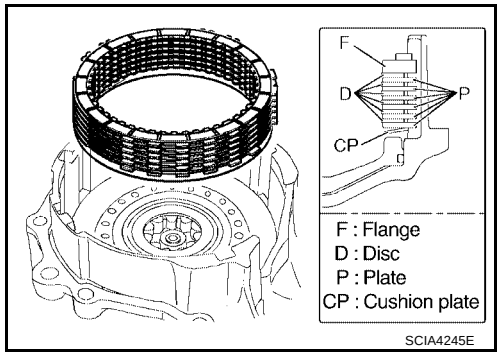

9. Place clutch spring compressor on return spring, and compress return spring with a press.

   CAUTION:
   Do not press return spring too much to avoid deformation.

10. Using a flat-bladed screwdriver and remove snap ring.

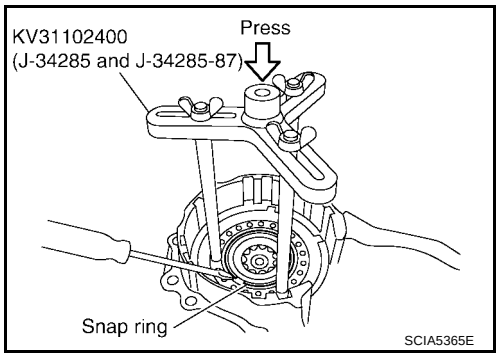

11. Remove return spring.

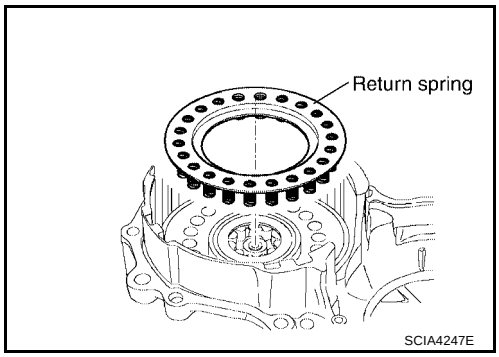

12. While pushing B5 brake piston by hand, apply compressed air (4Kg/cm^2) into the oil passage as shown in the figure and remove B5 brake piston.

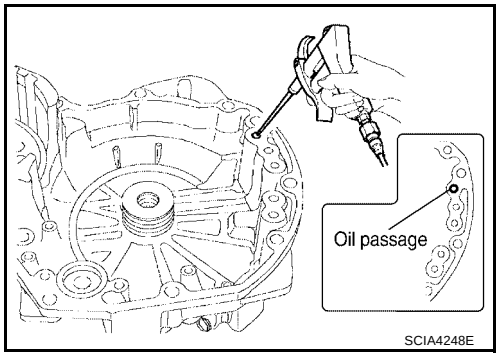

13. Remove O-rings from B5 brake piston.
14. Remove seal ring from transaxle case cover.

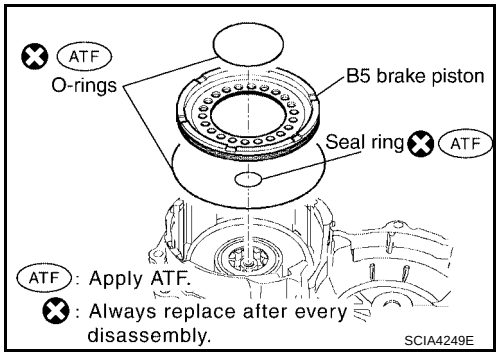

INSPECTION

- Check that the sliding surface of discs and plates is not worn or burnt. If the discs or plates is worn or burnt, replace it

  CAUTION:
  Replace new clutch discs by soaking them at least 2 hours in ATF.

ASSEMBLY

1. Install seal ring in transaxle case cover.

   CAUTION:
   - **Do not reuse seal ring.**
   - **Apply ATF to seal ring.**
2. Install O-rings in B5 brake piston.

   CAUTION:
   - **Do not reuse O-rings.**
   - **Apply ATF to O-rings.**
3. Coat the inner surface of transaxle case cover with ATF.
4. Press B5 brake piston into the transaxle case cover.

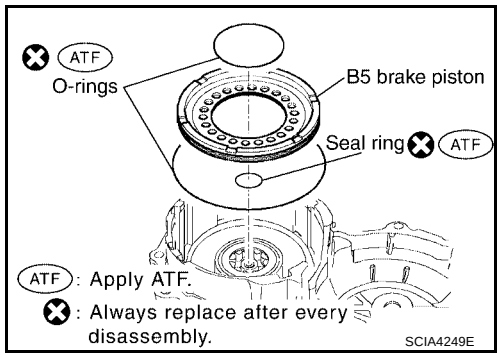

5. Place return spring on B5 brake piston.

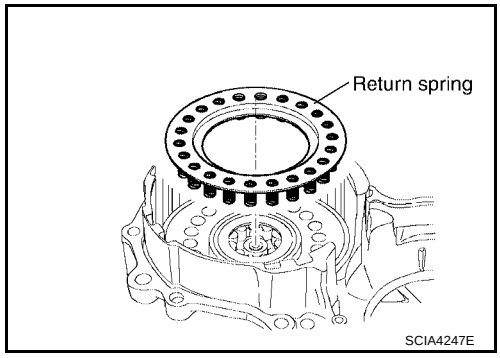

6. Place clutch spring compressor on return spring, and compress return spring with a press.

   CAUTION:
   Do not press return spring too much to avoid deformation.
7. Using a flat-bladed screwdriver and install snap ring.

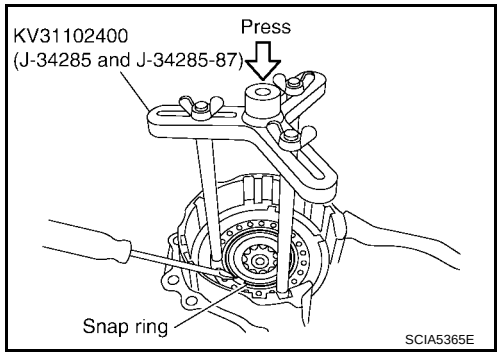

8. Install B5 brake cushion plate.

   CAUTION:
   Be sure direction of B5 brake cushion plate.
9. Install B5 brake flange, B5 brake plates and B5 brake discs as shown in the figure.

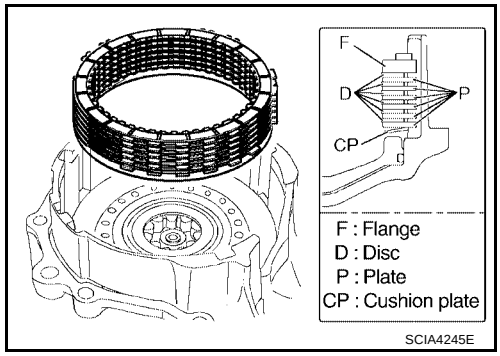

10. Using a flat-bladed screwdriver and install snap ring.

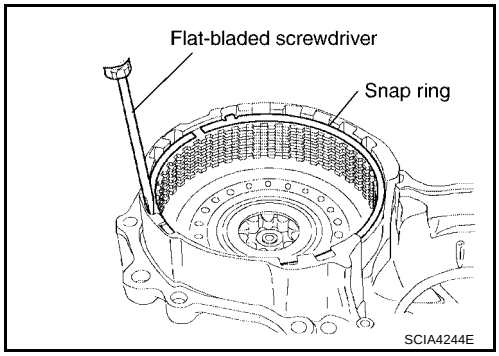

11. Install O-ring in accumulator cover.

    CAUTION:
    - **Do not reuse O-ring.**
    - **Apply ATF to O-ring.**
12. Install seal ring in forward clutch accumulator piston.

    CAUTION:
    - **Do not reuse seal ring.**
    - **Apply ATF to seal ring.**
13. Install forward clutch accumulator piston, compression spring and accumulator cover in transaxle case cover.
14. Tighten accumulator cover fixing torx bolts to specified torque. Refer to AT-657, "COMPONENTS" .

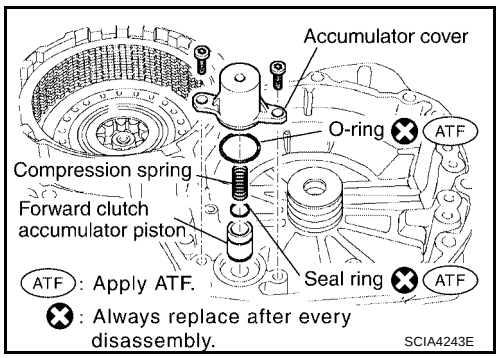

15. Install seal rings and bearing race in transaxle case cover.
    - Manufactured on October 1, 2003 or earlier. Refer to AT-378, "INFORMATION OF SERIAL NUMBER" .

      CAUTION:
      - **Do not reuse seal rings.**
      - **Apply ATF to seal rings.**
      - **Apply petroleum jelly to bearing race.**

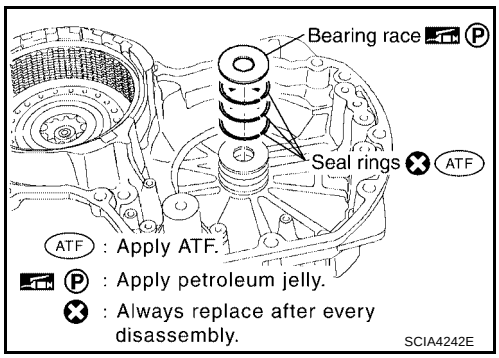

    - Manufactured on October 2, 2003 and later. Refer to AT-378, "INFORMATION OF SERIAL NUMBER" .

      CAUTION:
      - **Do not reuse seal rings.**
      - **Apply ATF to seal rings.**
      - **Apply petroleum jelly to bearing race.**
      - **Refer to ASSEMBLY to see how to select bearing race.**

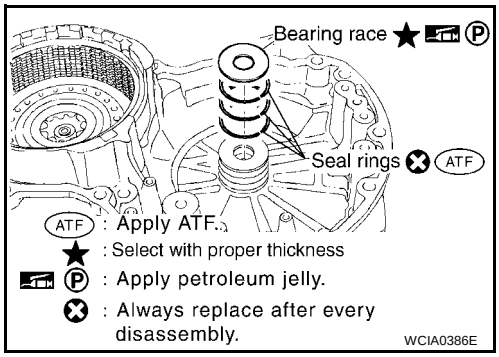

16. Using a soft hammer and install the U/D clutch apply tube sub assembly.

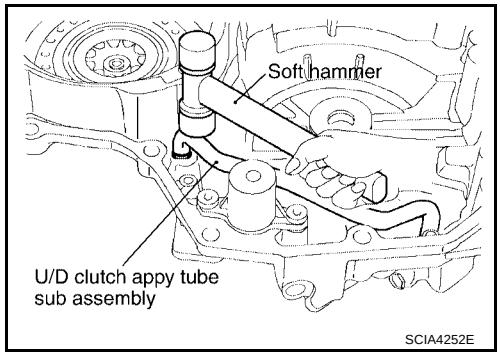

17. Tighten tube clamp fixing bolts to specified torque. Refer to AT-657, "COMPONENTS" .

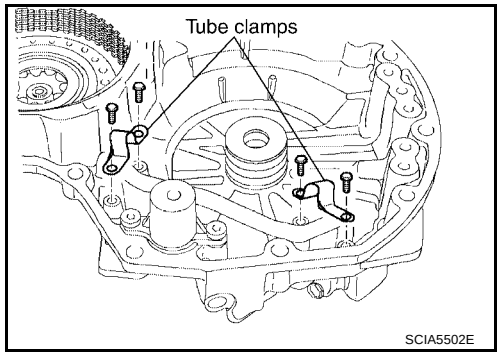

18. Set a dial indicator as shown in the figure.
19. When applying compressed air (4Kg/cm^2) into the oil passage as shown, measure the B5 brake piston stroke and check the B5 brake piston moves smoothly.

    Piston stroke :2.34 - 2.70mm (0.0921 - 0.1063in)

    If the B5 brake piston stroke is out standards, select another flange. Refer to AT-698, "B5 BRAKE" .

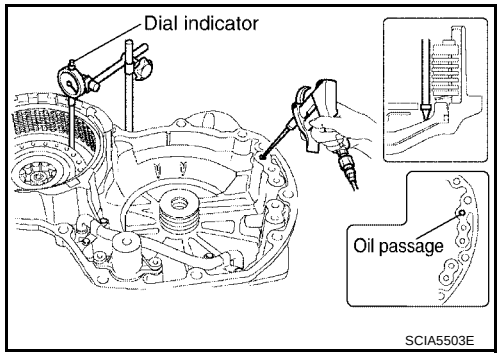

Differential Gear Assembly

UCS002L6

COMPONENTS

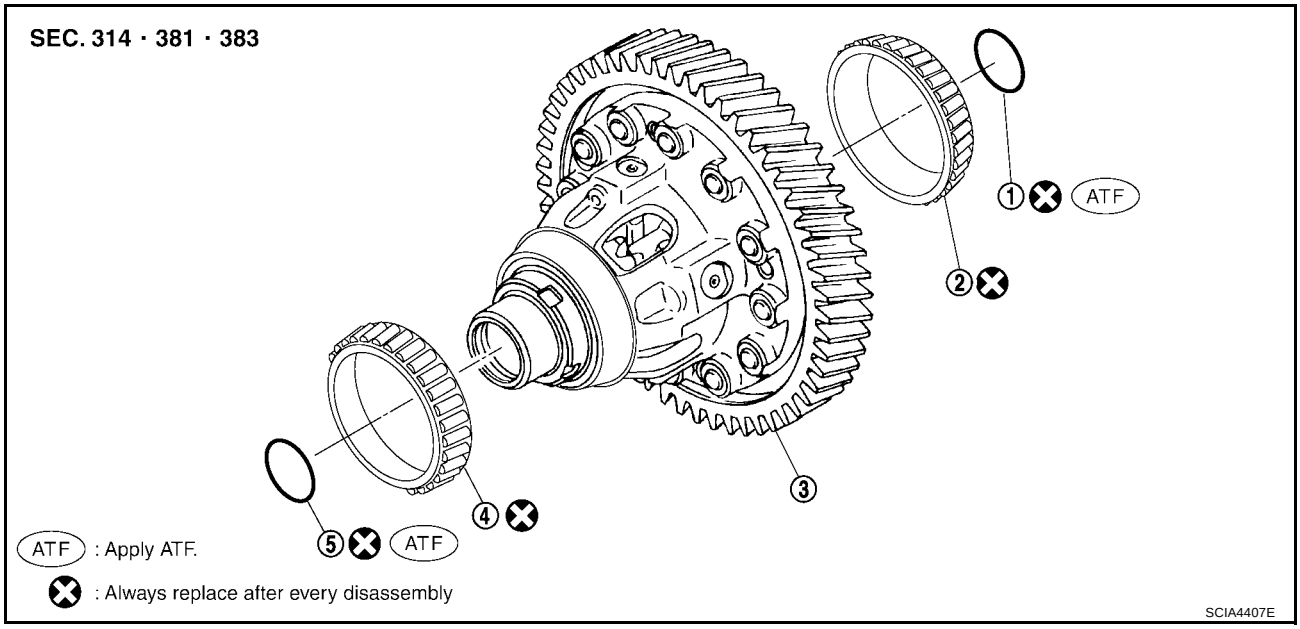

1. O-ring
2. Tapered roller bearing
3. Differential gear assembly
4. Tapered roller bearing
5. O-ring

DISASSEMBLY

1. Remove O-rings from differential gear assembly.

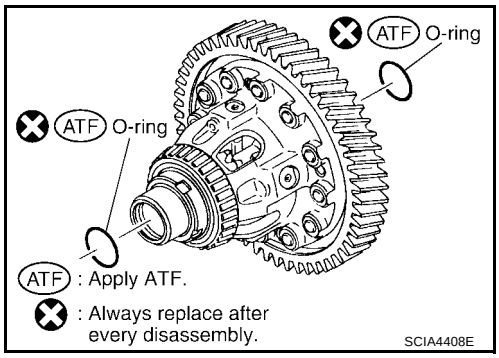

2. Using a puller and remove tapered roller bearings.

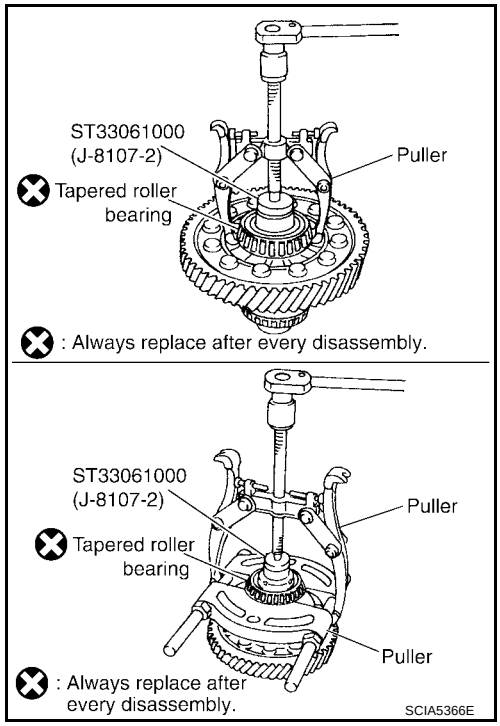

ASSEMBLY

1. Install tapered roller bearings in differential gear assembly.

   CAUTION:
   Do not reuse tapered roller bearings.

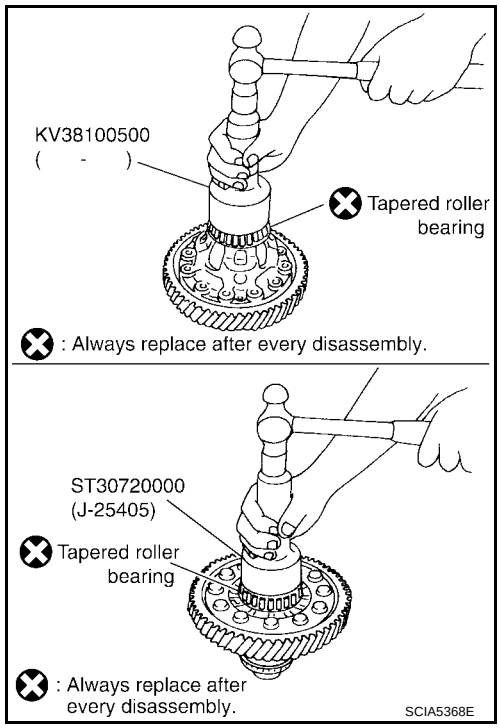

2. Install O-rings in differential gear assembly.

CAUTION:

- **Do not reuse O-rings.**
- **Apply ATF to O-rings.**

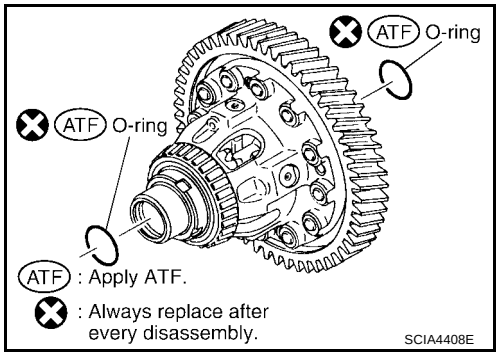

ASSEMBLY

PFP:00000

Assembly (1)

UCS002L7

1. As shown below, use a drift to drive differential side oil seal into transaxle case.

   Distance : 3.0 - 4.0 mm (0.118 - 0.157 in)

   CAUTION:
   - **Do not reuse differential side oil seal.**
   - **Apply ATF to differential side oil seal.**

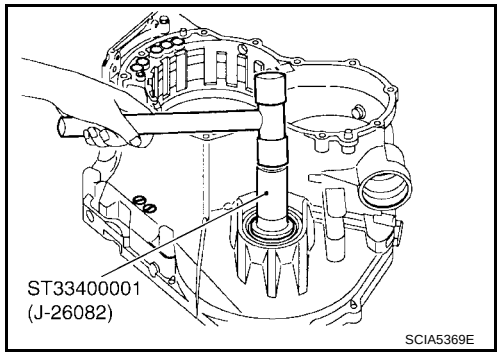

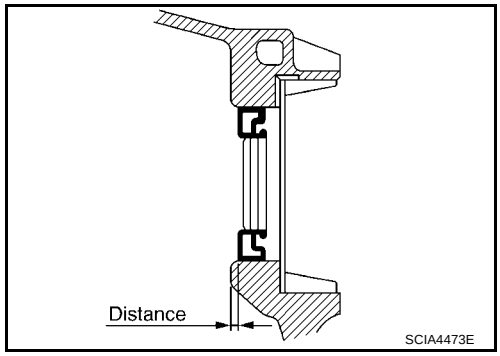

2. Install counter drive gear sub assembly.

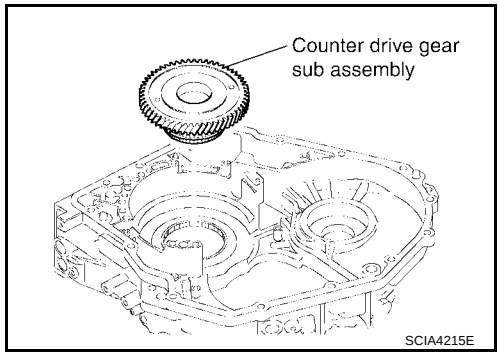

3. Using a snap ring pliers and install snap ring.

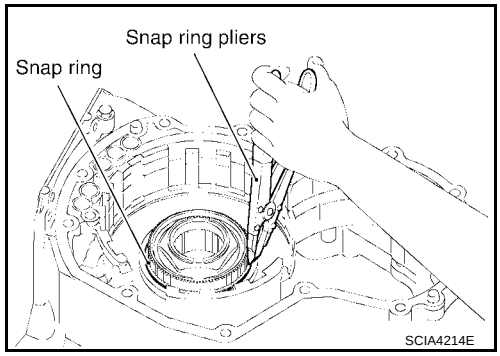

4. Install O-rings in 1st and reverse brake piston.

   CAUTION:
   - **Do not reuse O-rings.**
   - **Apply ATF to O-rings.**

5. Coat the inner surface of transaxle case with ATF.
6. Install 1st and reverse brake piston in transaxle case.

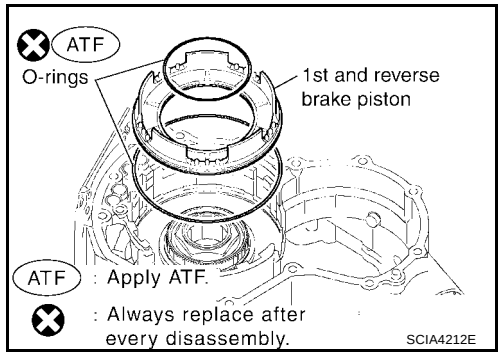

7. Put return spring on 1st and reverse brake piston.

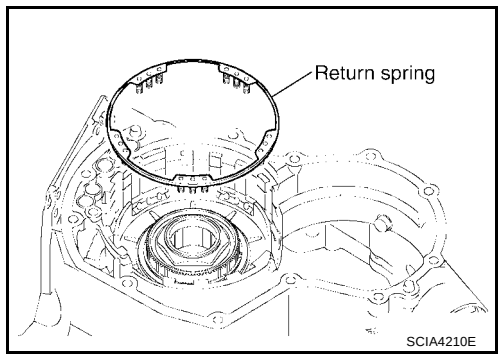

8. While compressing the return spring by hand, install the snap ring into groove with a flat-bladed screwdriver.

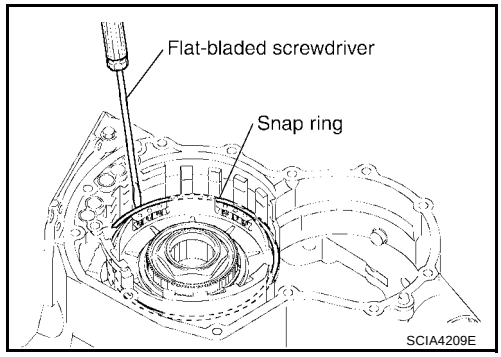

9. Put thrust bearing race and thrust bearing on counter drive gear sub assembly.

   CAUTION:
   Apply petroleum jelly to thrust bearing and thrust bearing race.

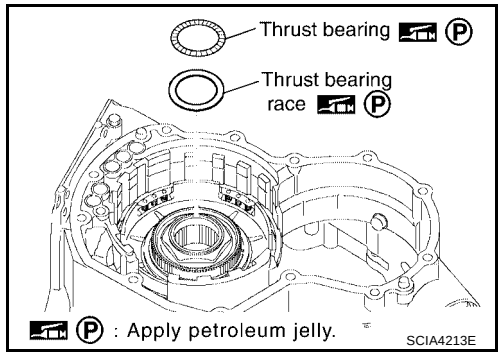

10. Install FR planetary ring gear assembly with one-way clutch No.2.

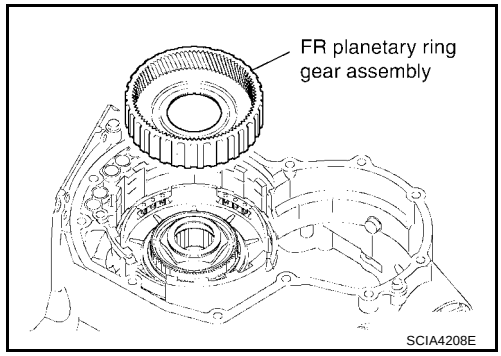

11. Install 1st and reverse brake flanges, 1st and reverse brake discs and 1st and reverse brake plates.

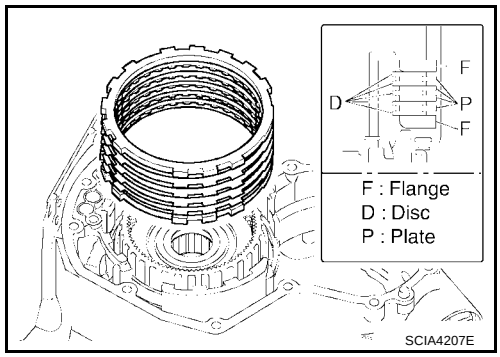

12. Using a flat-bladed screwdriver and install snap ring.

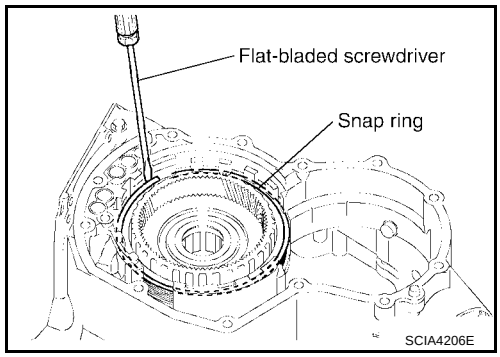

13. Set a dial indicator as shown in the figure.
14. Applying compressed air (4Kg/cm^2) and measure the 1st and reverse brake piston stroke.

    Piston stroke : 1.39 - 2.21 mm (0.0547 - 0.0870 in)

    In a case that is out of reference, check the following items:
    - Oil pressure leak
    - Damage of O-ring
    - Wear damage of discs

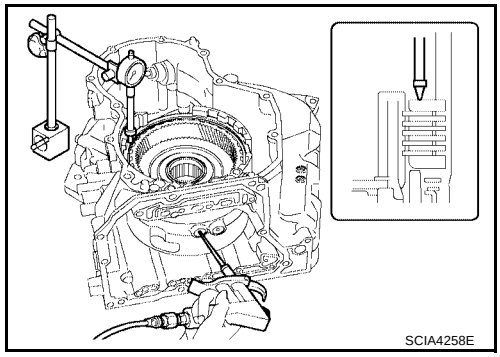

15. Install thrust bearing.

    CAUTION:
    Apply petroleum jelly to thrust bearing.

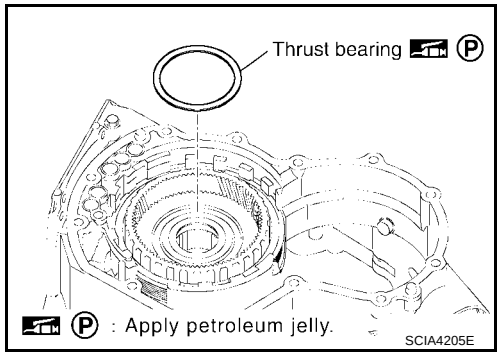

16. Install planetary gear assembly.
17. Install thrust bearing race in planetary gear assembly.

    CAUTION:
    Apply petroleum jelly to thrust bearing race.

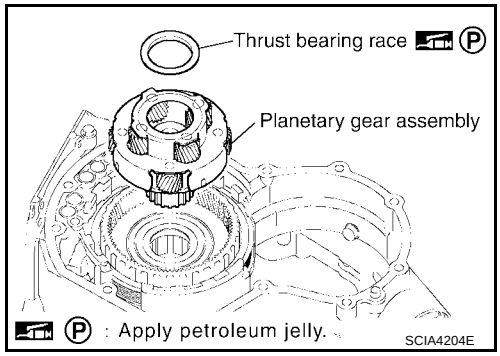

18. Install thrust needle roller bearing and thrust bearing race in RR planetary ring gear assembly.

    CAUTION:
    Apply petroleum jelly to thrust needle roller bearing and thrust bearing race.

19. Install RR planetary ring gear assembly.

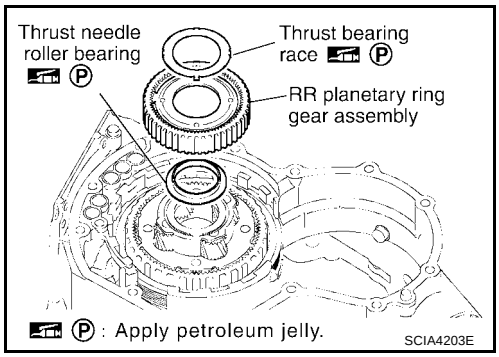

20. Install planetary sun gear sub assembly and thrust needle roller bearings.

    CAUTION:
    Apply petroleum jelly to thrust needle roller bearings.

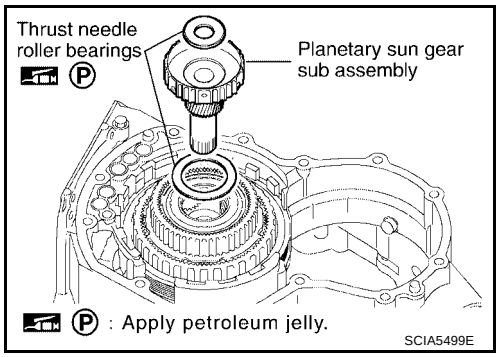

21. Install forward and direct clutch assembly.
    - Install thrust bearing race, thrust needle roller bearing and seal ring in forward and direct clutch assembly.
    - Manufactured on October 1, 2003 or earlier. Refer to AT-378, "INFORMATION OF SERIAL NUMBER" .

      CAUTION:
      - **Apply petroleum jelly to thrust needle roller bearing and thrust bearing race.**
      - **Apply ATF to seal ring.**
      - **Do not reuse seal ring.**

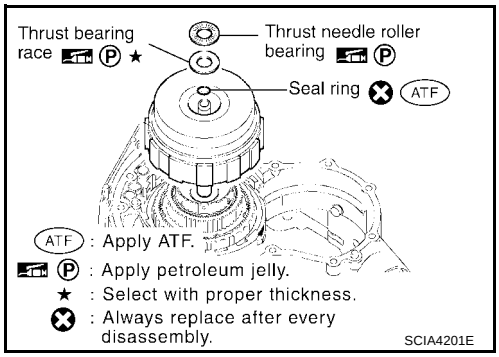

    - Manufactured on October 2, 2003 and later. Refer to AT-378, "INFORMATION OF SERIAL NUMBER" .

      CAUTION:
      - **Apply petroleum jelly to thrust needle roller bearing and thrust bearing race.**
      - **Apply ATF to seal ring.**
      - **Do not reuse seal ring.**

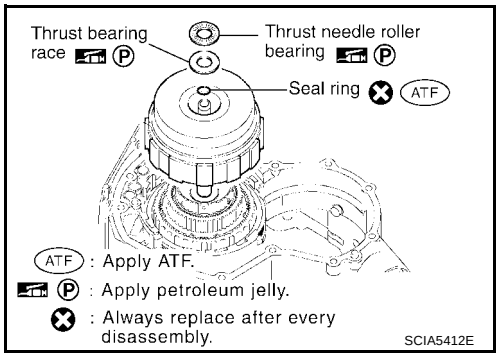

22. Check the distance of “A”.

    “A” : 50.850 - 51.825 mm (2.0020 - 2.0404 in)

    CAUTION:
    If the distance is out of standards, adjust with in standards again.

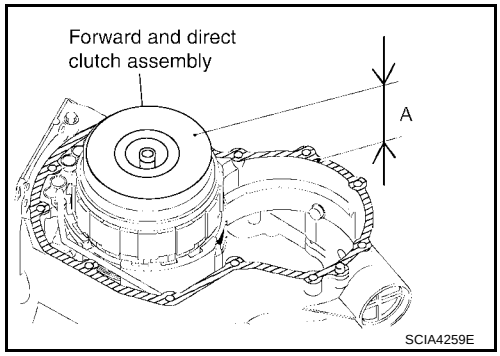

23. Using a soft hammer and install transaxle lube apply tube.

    CAUTION:
    Be careful not to bend and damage transaxle lube apply tube.

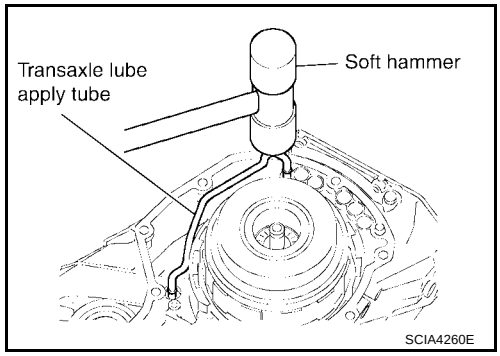

24. Tighten tube clamp fixing bolt to specified torque. Refer to AT-614, "Components" .

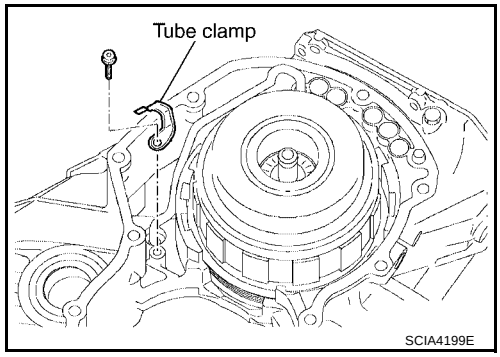

25. Install governor apply gaskets in transaxle case.

    CAUTION:
    - **Do not reuse governor apply gaskets.**
    - **Apply petroleum jelly to governor apply gaskets.**

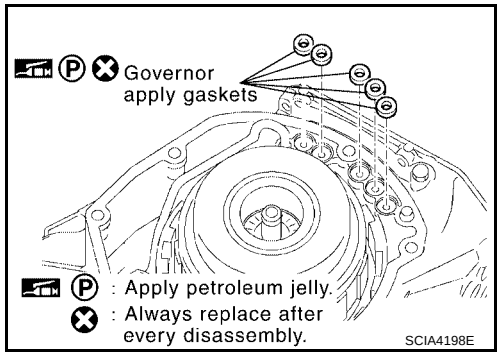

26. Install transaxle case cover in transaxle case.

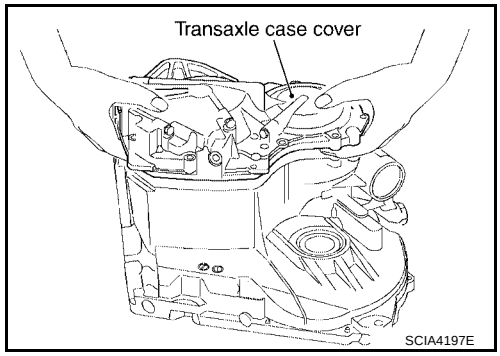

27. Tighten transaxle case cover fixing bolts to specified torque. Refer to AT-614, "Components" .

CAUTION:
Use old seal bolts when cheking and adjusting and end play because of re-installing transaxle case cover.

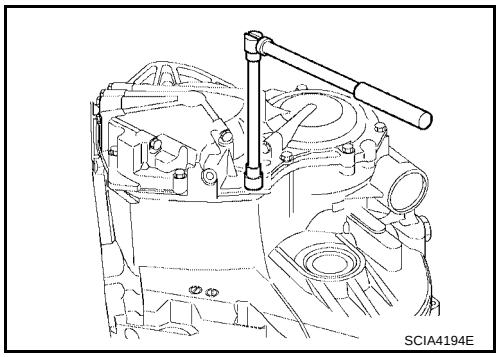

- Manufactured on October 1, 2003 or earlier. Refer to AT-378, "INFORMATION OF SERIAL NUMBER" .

Bolt symbol	Length mm (in)	Number of bolts
A	30 (1.18)	8
B	45 (1.77)	1
C	48 (1.89)	2
D*	—	1

*:Stud bolt

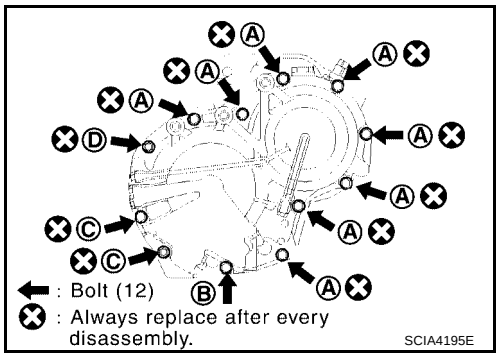

- Manufactured on October 2, 2003 and later. Refer to AT-378, "INFORMATION OF SERIAL NUMBER" .

Bolt symbol	Length mm (in)	Number of bolts
A	30 (1.18)	8
B	45 (1.77)	2
C	48 (1.89)	2
D*	—	1

*:Stud bolt

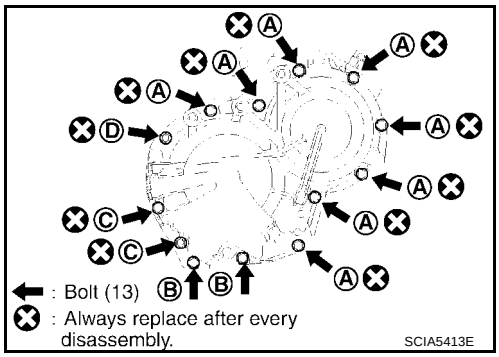

28. Tighten anchor bolt to specified torque. Refer to AT-614, "Components" .

CAUTION:
- **Do not reuse O-ring.**
- **Apply ATF to O-ring.**

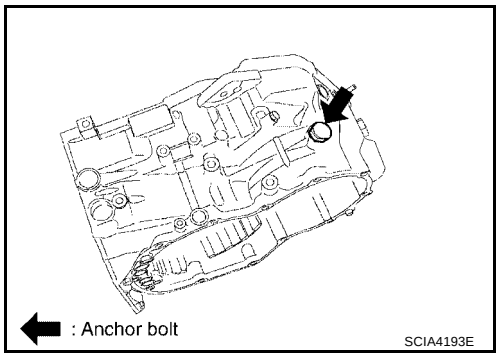

29. Install O-ring in U/D brake piston assembly.

    CAUTION:
    - **Do not reuse O-ring.**
    - **Apply ATF to O-ring.**
30. Coat the inner surface of transaxle case with ATF.
31. Install compression spring and U/D brake piston assembly.

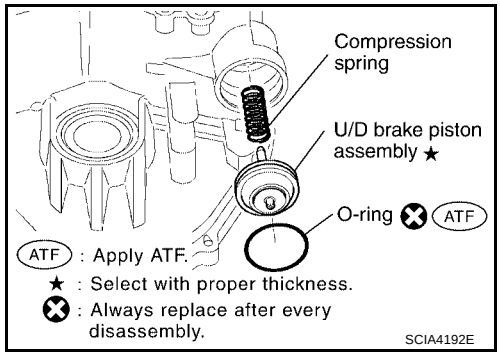

32. Install O-rings in U/D brake damper assembly.

    CAUTION:
    - **Do not reuse O-rings.**
    - **Apply ATF to O-rings.**
33. Install U/D brake damper assembly.

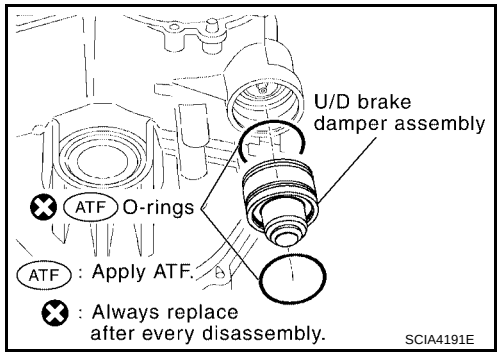

34. Using a snap ring pliers and install snap ring.

    CAUTION:
    If the snap ring is deformed, replace it.

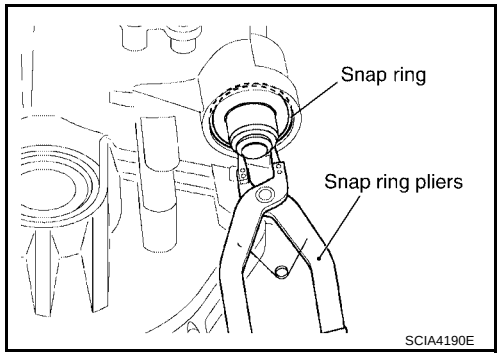

35. Install thrust needle roller bearing, adjust shim and thrust bearing race in U/D RR planetary ring gear sub assembly.
    - Manufactured on October 1, 2003 or earlier. Refer to AT-378, "INFORMATION OF SERIAL NUMBER" .

      CAUTION:
      Apply petroleum jelly to thrust needle roller bearing and thrust bearing race.

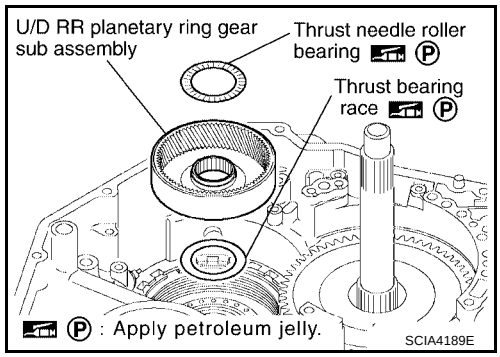

- Manufactured on October 2, 2003 and later. Refer to AT-378, "INFORMATION OF SERIAL NUMBER" .

CAUTION:
Apply petroleum jelly to adjust shim, thrust needle roller bearing and thrust bearing race.

36. Install U/D RR planetary ring gear sub assembly.

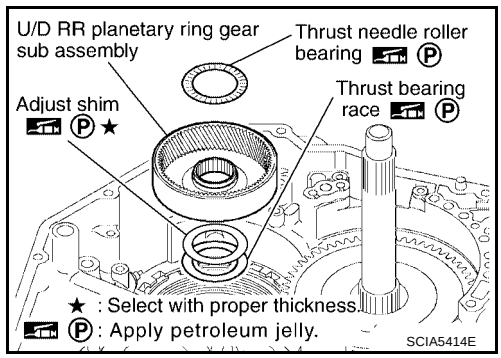

37. Install U/D RR planetary carrier assembly and thrust bearing races.

CAUTION:
Apply petroleum jelly to thrust bearing races.

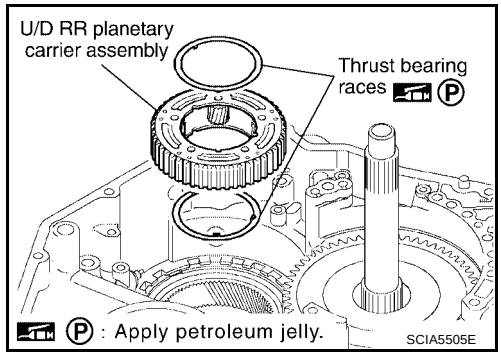

38. Install U/D brake band assembly.

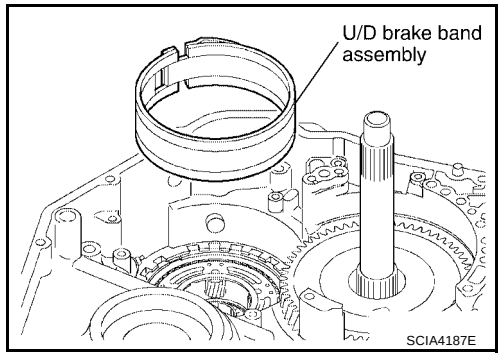

39. Measure the U/D brake piston stroke applying and releasing the compressed air (4Kg/cm^2) as shown in the figure.

Piston Stroke : 5.76 - 6.76 mm (0.2268 - 0.2661 in)

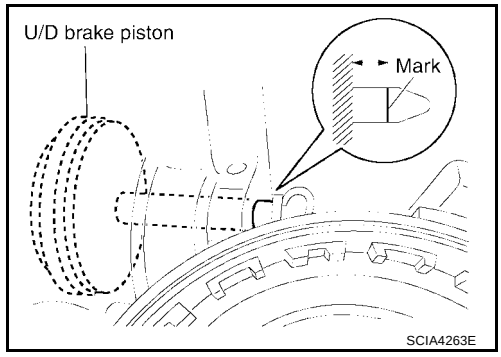

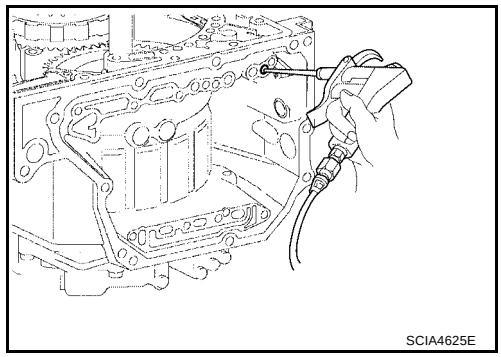

40. If the piston stroke is out of standards, select another U/D brake piston. Refer to AT-699, "U/D BRAKE" .

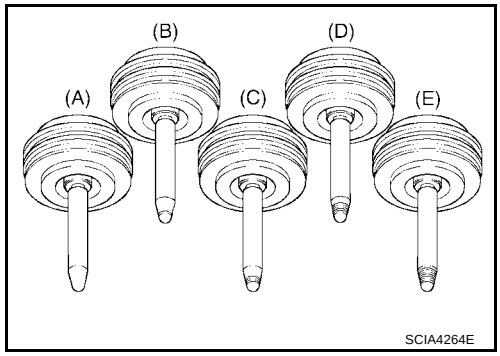

Adjustment

UCS002L8

ADJUST PREROAD OF TAPERED ROLLER BEARING

1. Install adjust shim and outer race in transaxle case.

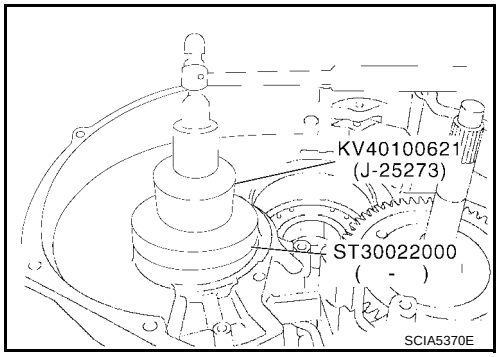

2. Install differential gear assembly in transaxle case.
3. Install transaxle housing into transaxle case.

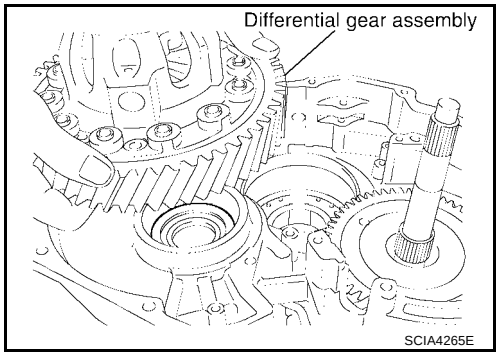

4. Tighten transaxle housing and transaxle case fixing bolts to specified torque. Refer to AT-614, "Components" .

   CAUTION:
   Use old seal bolts when cheking and adjusting and preroad because of re-installing transaxle housing.

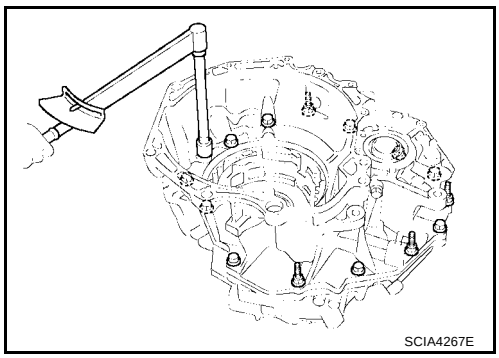

Bolt symbol	Length mm (in)	Number of bolts
A	30 (1.18)	13
B	35 (1.38)	2
C	45 (1.77)	1
D*	—	1

*:Torx bolt

- Manufactured on October 1, 2003 or earlier. Refer to AT-378, "INFORMATION OF SERIAL NUMBER" .

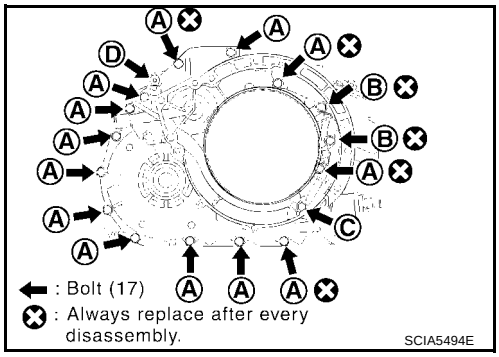

- Manufactured on October 2, 2003 and later. Refer to AT-378, "INFORMATION OF SERIAL NUMBER" .

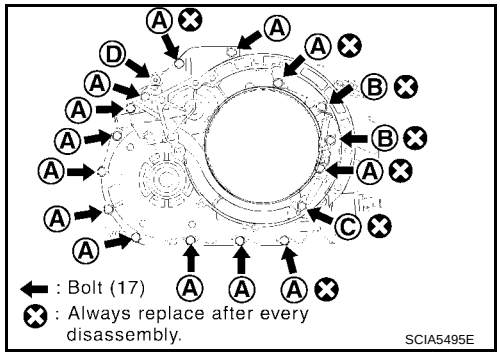

5. Insert Tool and measure turning torque of differential gear assembly.
6. Turn differential gear assembly in both directions several times to seat bearing rollers correctly.

   Turning torque (New bearing) : 0.7 - 1.2 N·m (0.08 - 0.12kg-m, 7 - 10 in-lb)

   If the preroad is not within specification, remove differential gear assembly from transaxle case. Re-select adjust shim. Refer to AT-700, "DIFFERENTIAL SIDE BEARING ADJUSTING SHIMS" .

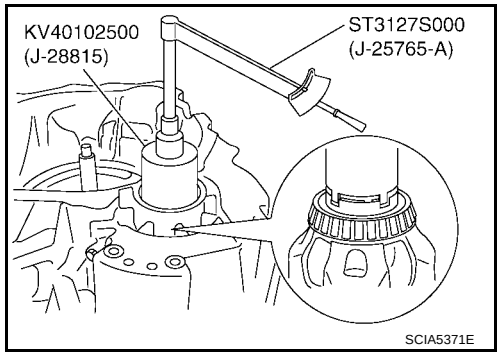

Assembly (2)

UCS002L9

1. Remove transaxle housing and differential gear assembly from transaxle case.
2. Install U/D clutch assembly.

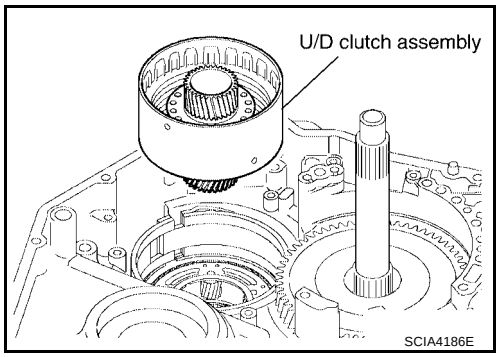

3. Install seal rings in U/D gear assembly.

   CAUTION:
   - **Do not reuse seal rings.**
   - **Apply ATF to seal rings.**
4. Install U/D gear assembly.

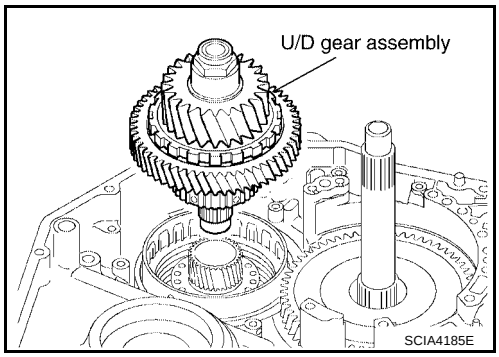

5. Install thrust needle roller bearing and thrust bearing race in U/D gear assembly.
   - Manufactured on October 1, 2003 or earlier. Refer to AT-378, "INFORMATION OF SERIAL NUMBER"

     CAUTION:
     Apply petroleum jelly to thrust needle roller bearing and thrust bearing race.

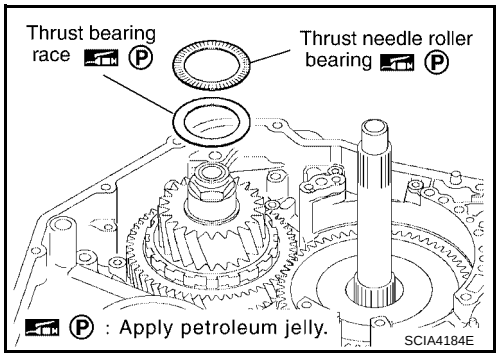

   - Manufactured on October 2, 2003 and later. Refer to AT-378, "INFORMATION OF SERIAL NUMBER" .
   - Perform the following procedure for adjustment.

     CAUTION:
     Apply petroleum jelly to thrust needle roller bearing and thrust bearing race.

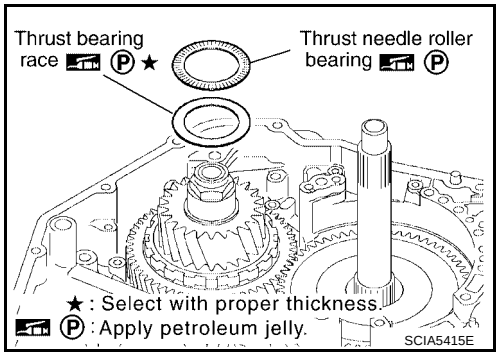

- Make sure that measurement “E” is within the specifications.

  Specification : 1.269 - 1.645 mm (0.0500 - 0.0648 in)

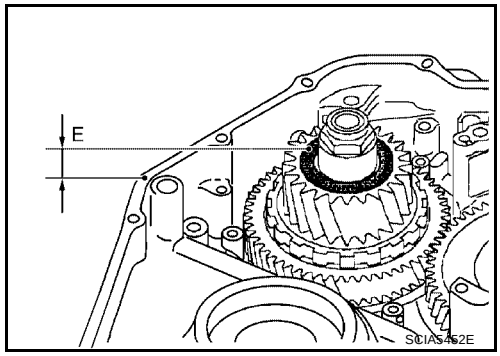

NOTE:
“E” is the height between the edge of transaxle case and the roller part of thrust needle roller bearing.

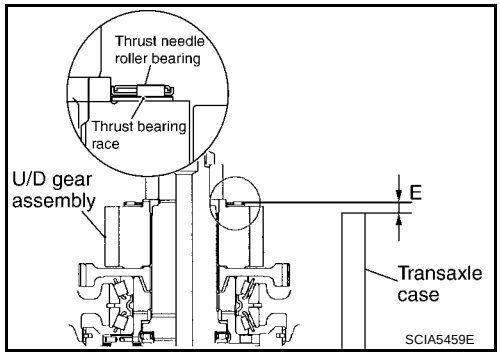

- If measurement “E” is outside the specifications, replace “T” with a one that has applicable thickness. Refer to AT-699, "U/D GEAR ASSEMBLY" .

  CAUTION:
  When adjusting “T”, use “S” of thickness 0.81mm (0.032in).

- If all of “T” do not fit “E” within the specifications, replace “S” with a one that has applicable thickness. Refer to AT-699, "U/D RR PLANETARY RING GEAR SUB ASSEMBLY" .

  CAUTION:
  When adjusting “S”, use “T” of thickness 0.80mm (0.031in).

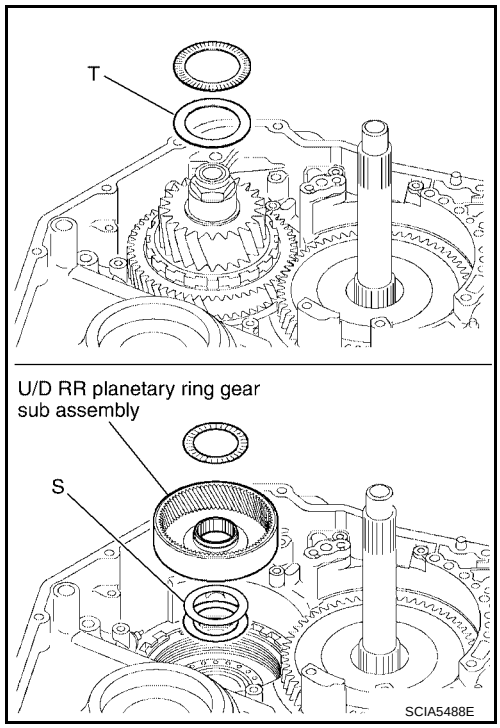

– Make sure that measurement “E” is within the specifications.

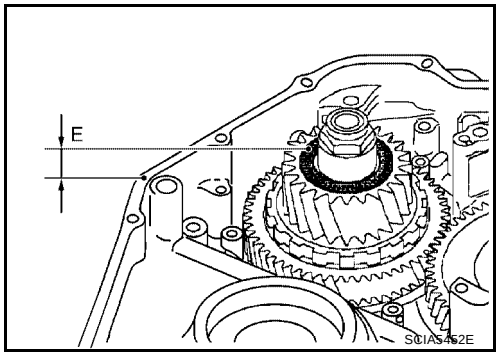

6. Install manual valve oil seal into transaxle case until it is flush.

CAUTION:

- **Do not reuse manual valve oil seal.**
- **Apply ATF to manual valve oil seal.**

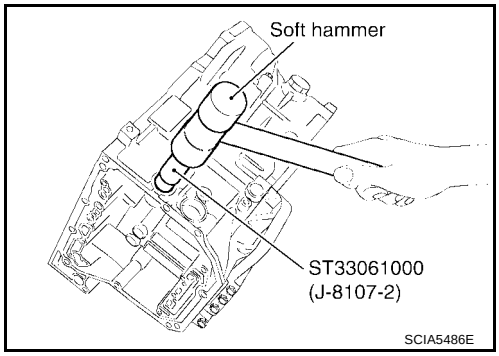

7. Install spring guide sleeve and torsion spring No.2 in transaxle case.
8. Tighten spring guide sleeve and torsion spring No.2 fixing torx bolt to specified torque. Refer to AT-614, "Components" .

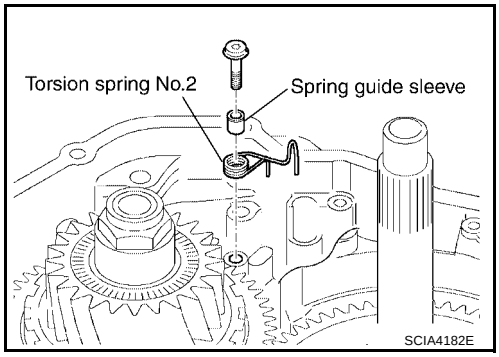

9. Install parking lockpin sub assembly.

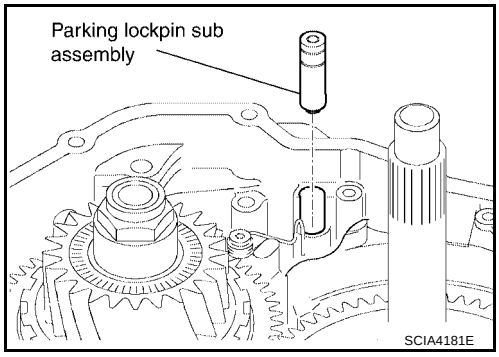

10. Install parking lock pawl braket and parking lock pawl.

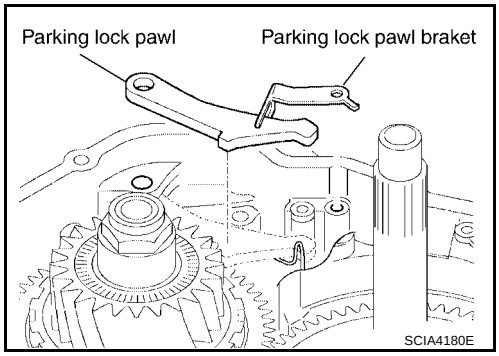

11. Install parking lock pawl shaft and torsion spring No.1.

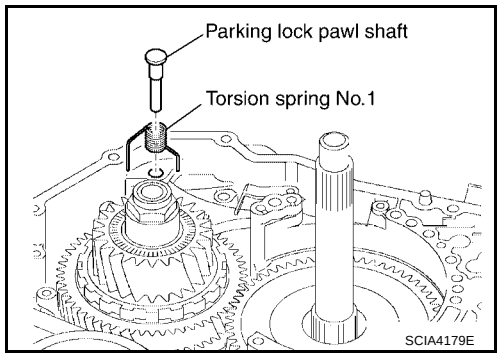

12. Install manual detent spring sub assembly.

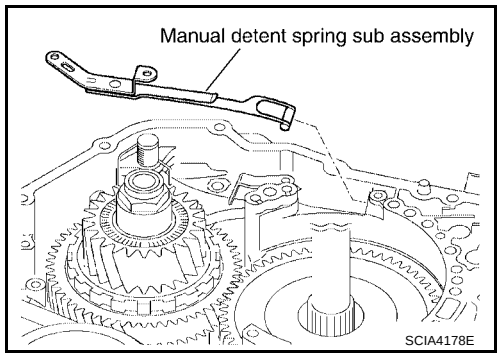

13. Temporary tightening the bolts.

Bolt symbol	Length mm (in)	Number of bolts
A	16.7 (0.657)	1
B	14.0 (0.551)	1

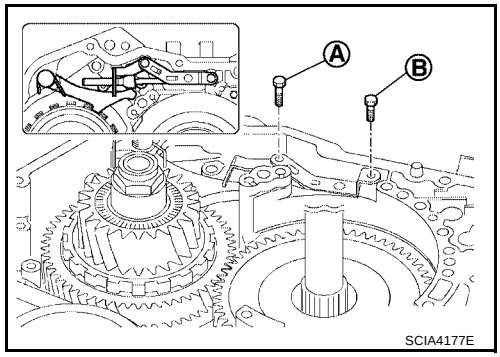

14. Install parking lock rod sub assembly.

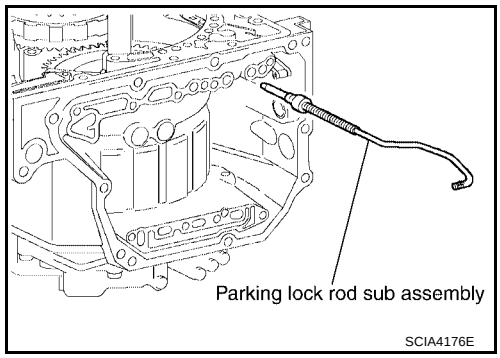

15. Install manual valve lever sub assembly connect parking lock rod sub assembly to it.

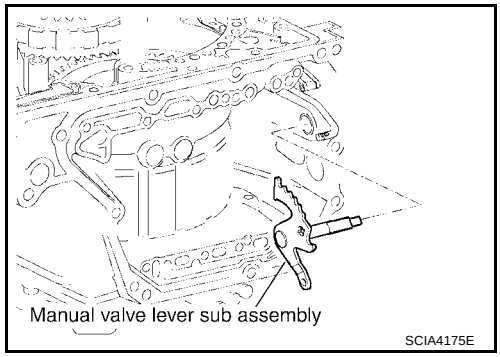

16. Using a flat-bladed screwdriver and connect manual detent spring sub assembly to manual valve lever sub assembly.

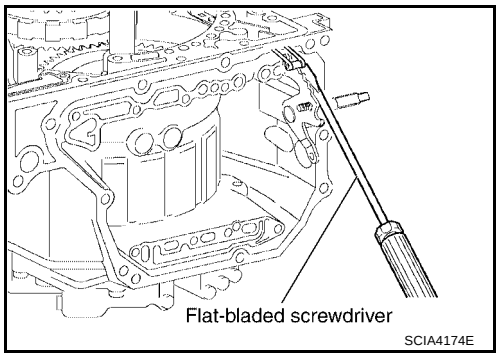

17. Tighten manual detent spring sub assembly fixing bolts to specified torque. Refer to AT-614, "Components" .

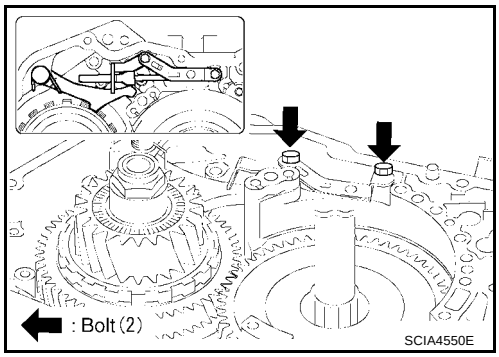

18. Using a soft hammer and install U/D brake apply tube sub assembly.

CAUTION:

Be careful not to damage U/D brake apply tube sub assembly.

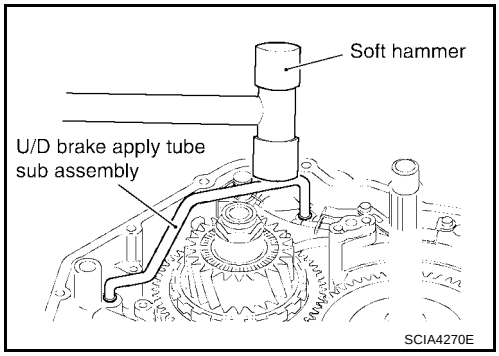

19. Tighten tube clamp fixing bolts to specified torque. Refer to AT-614, "Components" .

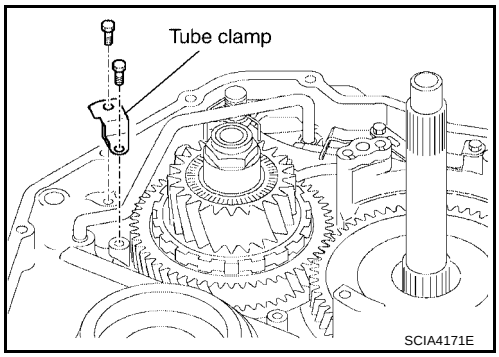

20. Install oil reservoir plate in transaxle case.
21. Tighten oil reservoir plate fixing bolts to specified torque. Refer to AT-614, "Components" .

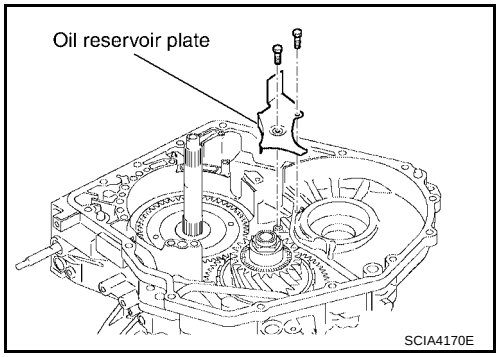

22. Install oil strainer sub assembly in transaxle case.
23. Tighten oil strainer sub assembly fixing bolt to specified torque. Refer to AT-614, "Components" .

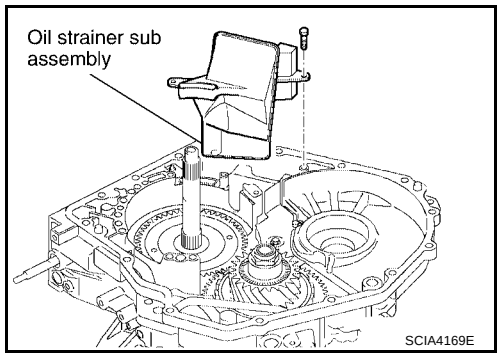

24. Install differential gear assembly.

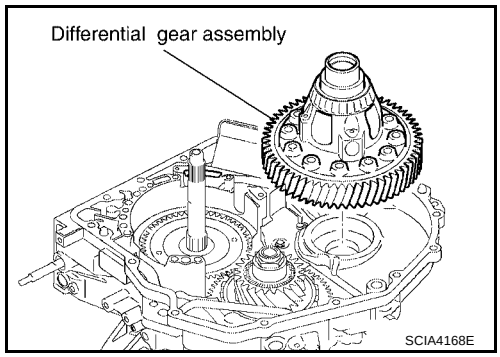

25. As shown below, use a drift to drive differential side oil seal into transaxle housing.

    Distance : 14.8 - 15.8 mm (0.583 - 0.622 in)

    CAUTION:
    - **Do not reuse differential side oil seal.**
    - **Apply ATF to differential side oil seal.**

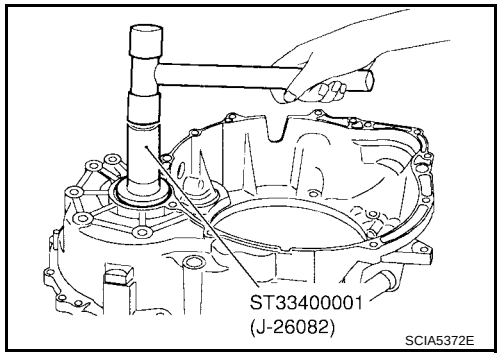

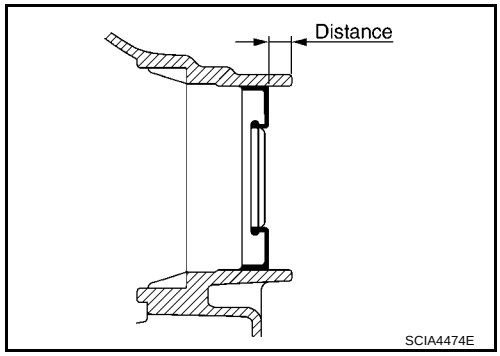

26. Install thrust roller bearing in transaxle housing.

    CAUTION:
    Do not reuse thrust roller bearing.

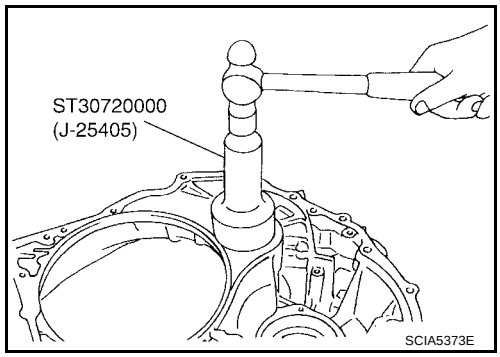

27. Install oil cleaner magnets on oil reservoir plate.

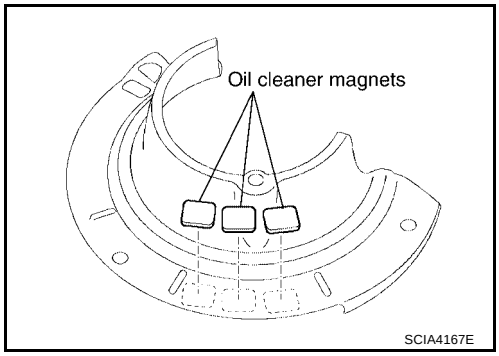

28. Install oil reservoir plate in transaxle housing.
29. Tighten oil reservoir plate fixing bolts to specified torque. Refer to AT-614, "Components" .

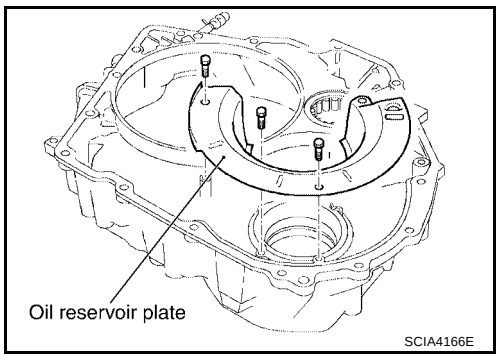

30. Using a soft hammer and install differential gear lube apply tube.

CAUTION:

Be careful not to bend or damage differential gear lube apply tube.

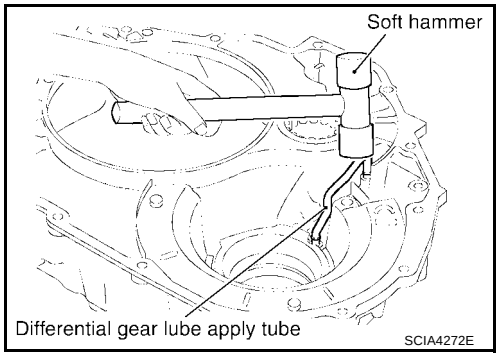

31. Tighten tube clamp fixing bolt to specified torque. Refer to AT-614, "Components" .

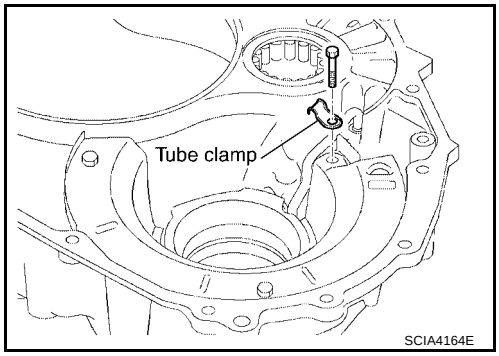

32. Install governor apply gasket.

CAUTION:

- **Do not reuse governor apply gasket.**
- **Apply petroleum jelly to governor apply gasket.**

33. Install seal ring.

CAUTION:

- **Do not reuse seal ring.**
- **Apply ATF to seal ring.**

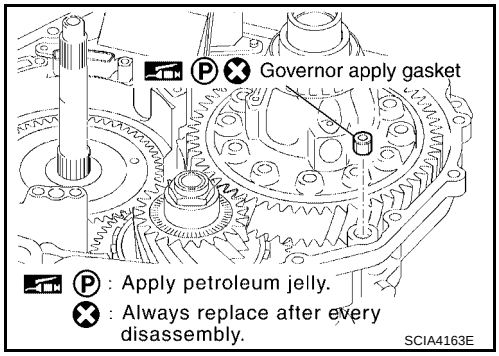

34. Apply silicone RTV to transaxle housing as shown in illustration. Refer to GI-43, "Recommended Chemical Products and Sealants" .

CAUTION:
Complete remove all moisture, oil and sealant, etc. From transaxle housing and transaxle case.

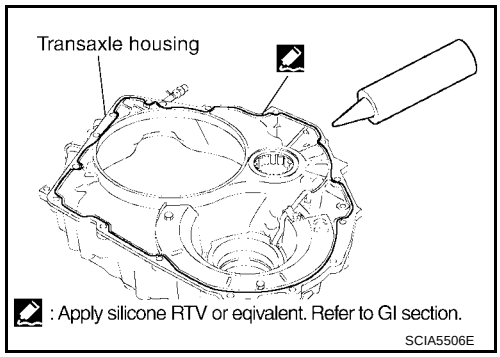

35. Install transaxle housing in transaxle case.
36. Tighten transaxle housing and transaxle case fixing bolts to specified torque. Refer to AT-614, "Components" .

CAUTION:
Do not reuse seal bolts.

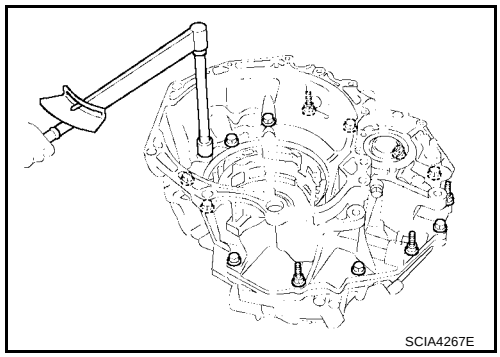

Bolt symbol	Length mm (in)	Number of bolts
A	30 (1.18)	13
B	35 (1.38)	2
C	45 (1.77)	1
D*	—	1

*:Torx bolt

- Manufactured on October 1, 2003 or earlier. Refer to AT-378, "INFORMATION OF SERIAL NUMBER" .

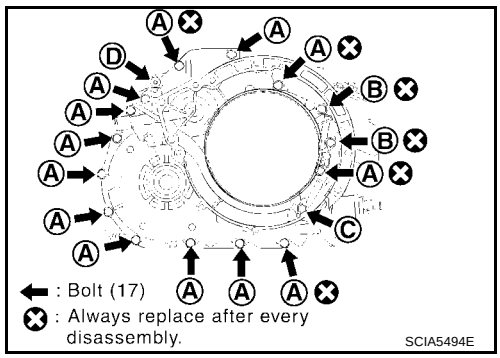

- Manufactured on October 2, 2003 and later. Refer to AT-378, "INFORMATION OF SERIAL NUMBER" .

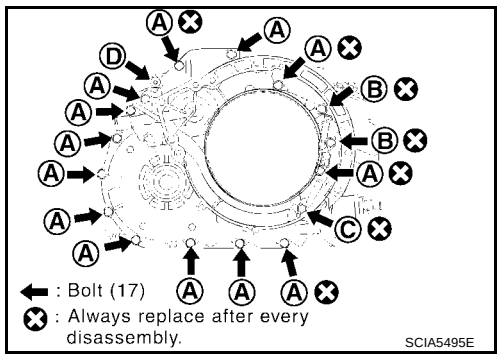

37. Install oil seal into oil pump assembly until it is flush.

CAUTION:

- **Do not reuse oil seal.**
- **Apply ATF to oil seal.**

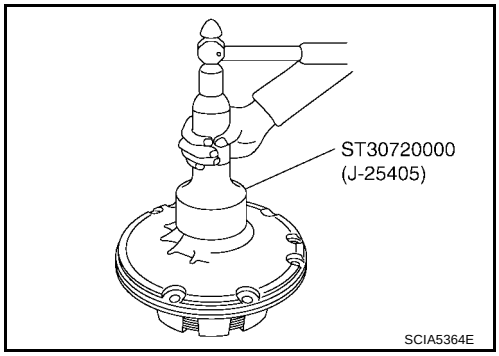

38. Install thrust washer and one- way clutch outer race sub assembly in oil pump assembly.

CAUTION:

Apply petroleum jelly to thrust washer.

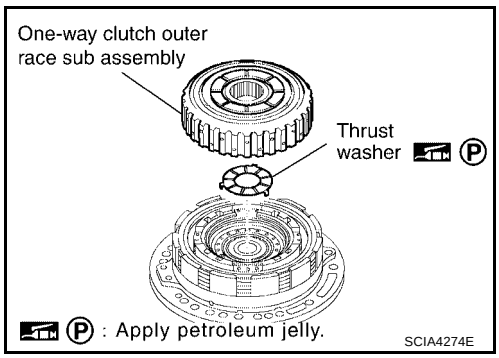

39. Check the distance of “B”.

“B” : 51.09 - 51.71 mm (2.0114 - 2.0358 in)

CAUTION:

If the distance is out of standards, adjust within standards again.

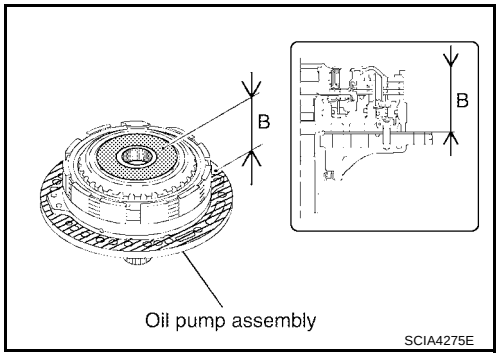

40. Place oil pump assembly through the input shaft in horizontal position, and align the bolt holes of the oil pump assembly with transaxle case. Lightly press oil pump assembly.

CAUTION:

Be careful not to drop one-way clutch outer race sub assembly.

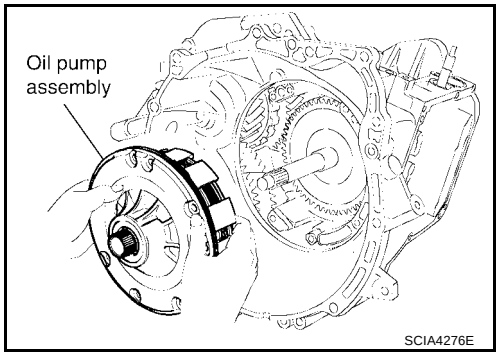

41. Tighten oil pump assembly fixing bolts to specified torque. Refer to AT-614, "Components" .

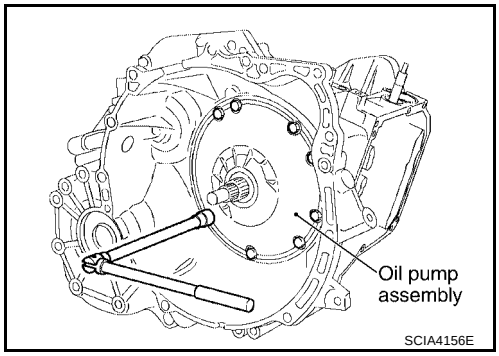

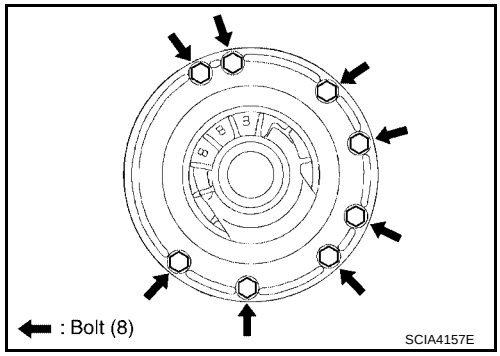

42. Set a dial indicator as shown in the figure, move the input shaft and measure the end play.

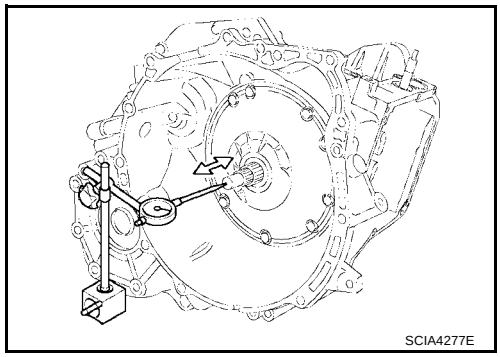

Manufactured on October 1, 2003 or earlier. Refer to AT-378, "INFORMATION OF SERIAL NUMBER"

End play : 0.305 - 0.820 mm (0.0120 - 0.0323 in)

Manufactured on October 2, 2003 and later. Refer to AT-378, "INFORMATION OF SERIAL NUMBER"

End play : 0.188 - 0.570 mm (0.0074 - 0.0224 in)

If the end play is out of standards, select another thrust bearing race. Refer to AT-698, "FORWARD AND DIRECT CLUTCH ASSEMBLY" .

- Manufactured on October 1, 2003 or earlier. Refer to AT-378, "INFORMATION OF SERIAL NUMBER"

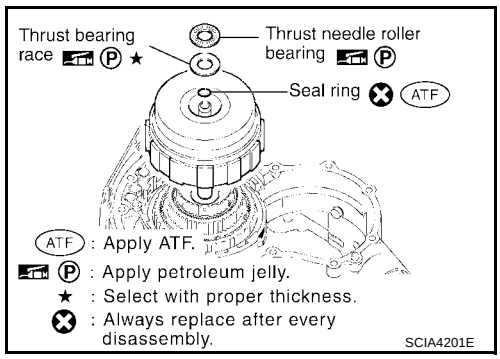

- Manufactured on October 2, 2003 and later. Refer to AT-378, "INFORMATION OF SERIAL NUMBER" .

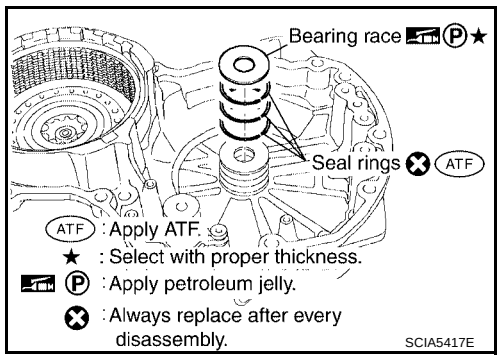

43. Remove transaxle case cover.
44. Apply silicone RTV to transaxle case cover as shown in illustration. Refer to GI-43, "Recommended Chemical Products and Sealants" .

    CAUTION:
    Complete remove all moisture, oil and sealant, etc. From transaxle case cover and transaxle.

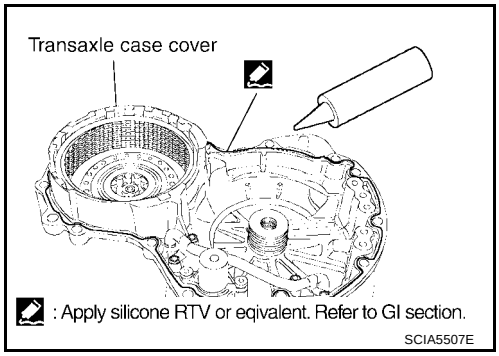

45. Install transaxle case cover in transaxle case.

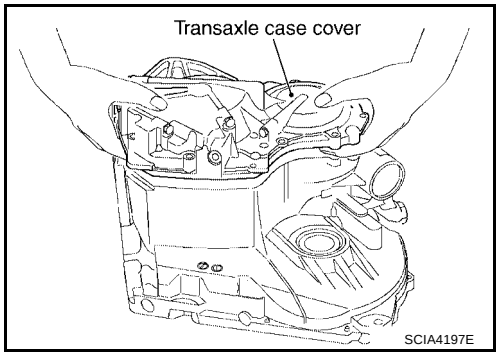

46. Tighten transaxle case cover fixing bolts to specified torque. Refer to AT-614, "Components" .

    CAUTION:
    Do not reuse seal bolts.

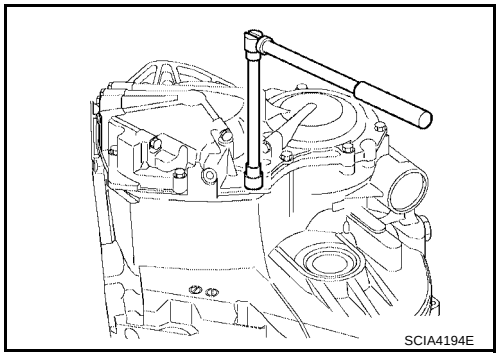

- Manufactured on October 1, 2003 or earlier. Refer to AT-378, "INFORMATION OF SERIAL NUMBER" .

Bolt symbol	Length mm (in)	Number of bolts
A	30 (1.18)	8
B	45 (1.77)	1
C	48 (1.89)	2
D*	—	1

*:Stud bolt

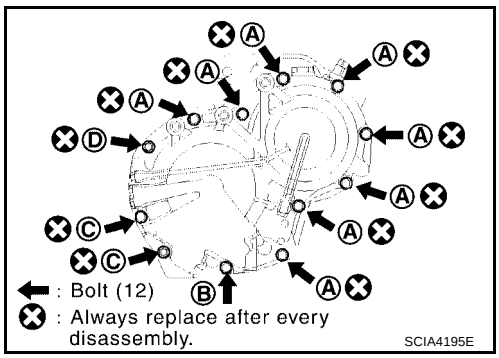

- Manufactured on October 2, 2003 and later. Refer to AT-378, "INFORMATION OF SERIAL NUMBER"

Bolt symbol	Length mm (in)	Number of bolts
A	30 (1.18)	8
B	45 (1.77)	2
C	48 (1.89)	2
D*	—	1

*:Stud bolt

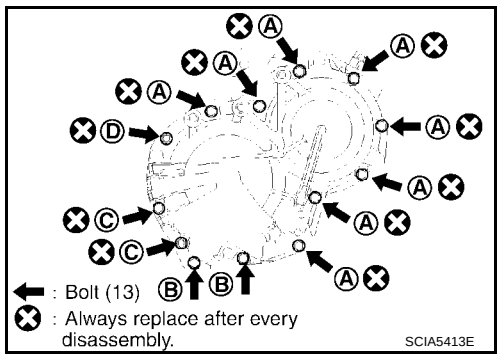

47. Install governor apply gaskets.

CAUTION:

- **Apply petroleum jelly to governor apply gaskets.**
- **Do not reuse governor apply gaskets.**

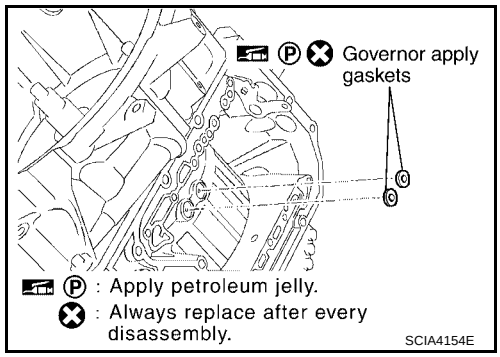

48. Install transmission wire.

CAUTION:

- **Be careful not to break the solenoid connector and A/T fluid temperature sensor.**
- **Apply ATF to O-ring.**

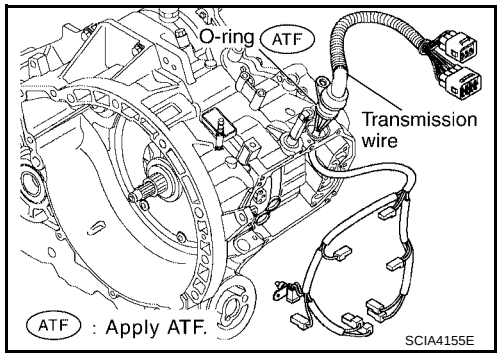

49. While holding control valve assembly, connect the parking lock rod sub assembly to manual valve lever sub assembly.

NOTE:
Shift position is “N”.

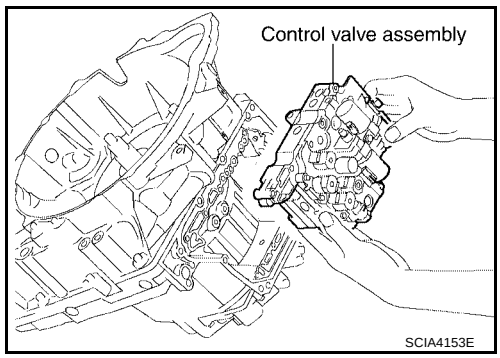

50. Tighten control valve assembly fixing bolts to specified torque. Refer to AT-614, "Components" .

Bolt symbol	Length mm (in)	Number of bolts
A	55 (2.17)	2
B	50 (1.97)	2
C	16 (0.63)	2

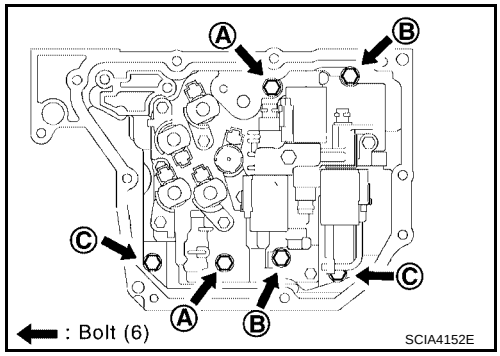

51. Install suction cover and suction cover gasket in control valve assembly.

    CAUTION:
    Do not reuse suction cover gasket.

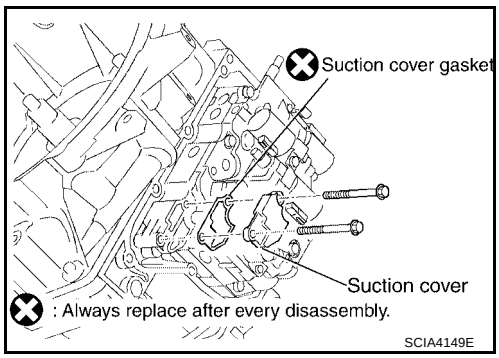

52. Tighten suction cover gasket and suction cover fixing bolts to specified torque. Refer to AT-614, "Components" .

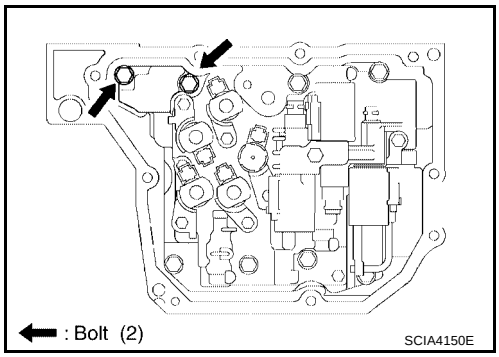

53. Install sensor clamp and A/T fluid temperature sensor in control valve assembly.

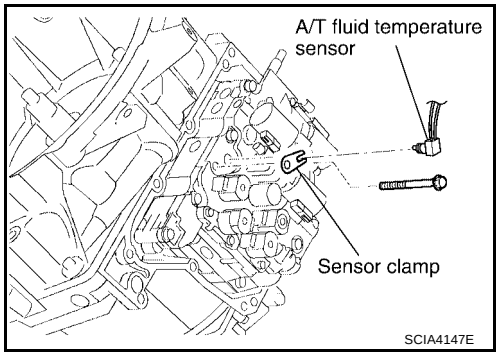

54. Tighten sensor clamp fixing bolt to specified torque. Refer to AT-614, "Components" .

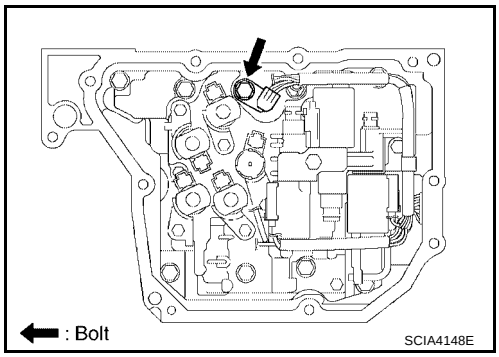

55. Connect the solenoid connectors.

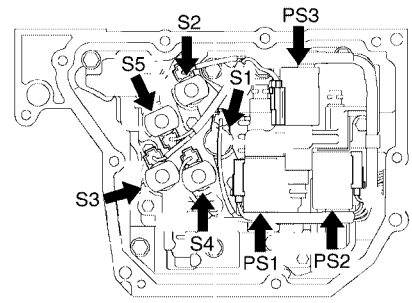

S1 : Shift solenoid valve A
S2 : Shift solenoid valve B
S3 : Shift solenoid valve C
S4 : Shift solenoid valve D
S5 : Shift solenoid valve E
PS1 : Pressure control solenoid valve A
PS2 : Pressure control solenoid valve B
PS3 : Pressure control solenoid valve C

SCIA4146E

56. Apply silicone RTV to side cover as shown in illustration. Refer to GI-43, "Recommended Chemical Products and Sealants" .

CAUTION:
Complete remove all moisture, oil and sealant, etc. From side cover and transaxle case.

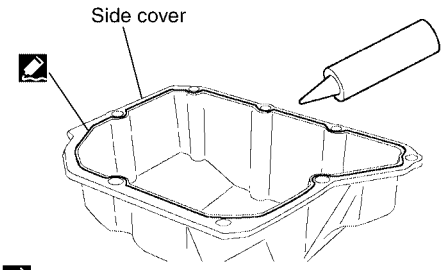

: Apply silicone RTV or eqivalent. Refer to GI section.

SCIA5508E

57. Install side cover in transaxle case.

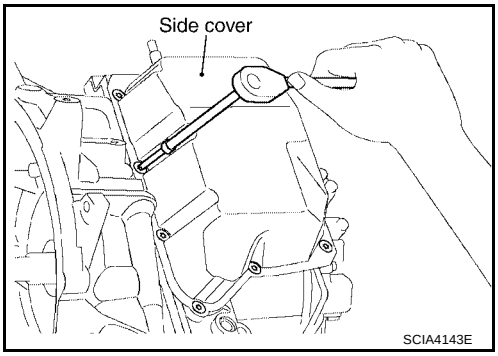

SCIA4143E

58. Tighten side cover fixing torx bolts to specified torque. Refer to AT-614, "Components" .

CAUTION:
Do not reuse seal bolts.

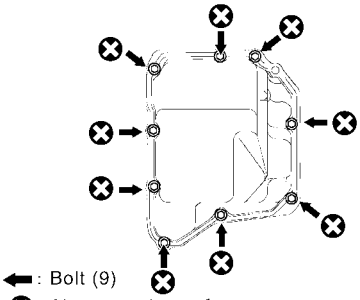

: Bolt (9)
: Always replace after every disassembly.

SCIA4144E

59. Install O-rings in ATF cooler assembly.

CAUTION:

- **Do not reuse O-rings.**
- **Apply ATF to O-rings.**

60. Install ATF cooler assembly, washer and spring washer.

CAUTION:

Do not reuse spring washer.

61. Tighten hexagon bolt specified torque. Refer to AT-614, "Components" .

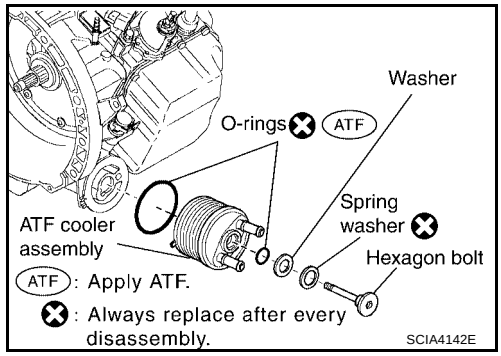

62. Install PNP switch to manual valve lever sub assembly.
63. Temporary tightening the bolts.

Bolt symbol	Length mm (in)	Number of bolts
A	20 (0.79)	1
B	33 (1.30)	1

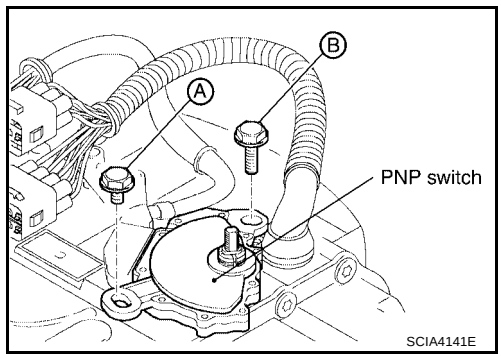

64. Install washer plate and lock washer.

CAUTION:

Do not reuse washer plate and lock washer.

65. Tighten nut specified torque. Refer to AT-614, "Components" .

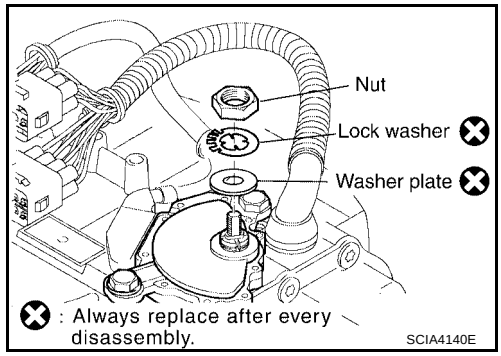

66. Install alignment tool.
67. Adjust PNP switch so that alignment tool pointer aligns with neutral base line on PNP switch body.

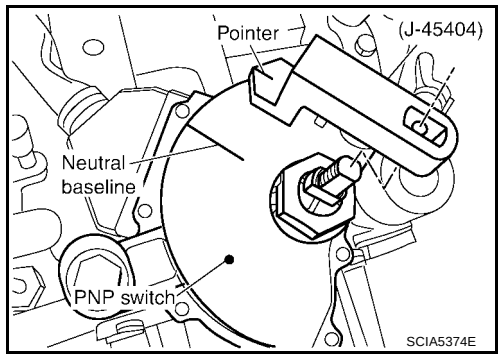

68. Tighten PNP switch fixing torx bolts to specified torque. Refer to AT-614, "Components" .

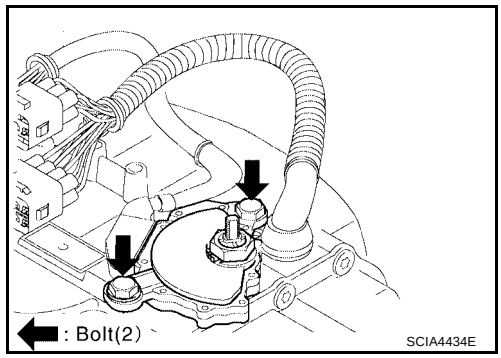

69. Using a flat-bladed screwdriver and bend the lock washer.

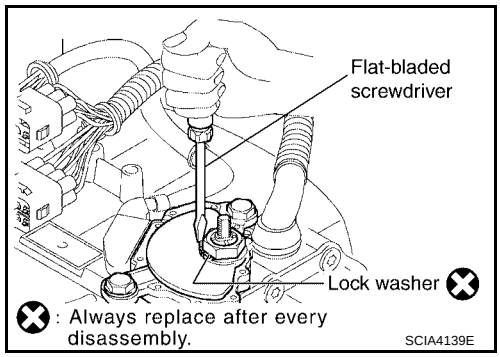

70. Install range lever in manual valve lever sub assembly.
71. Tighten range lever fixing nut to specified torque. Refer to AT-614, "Components" .

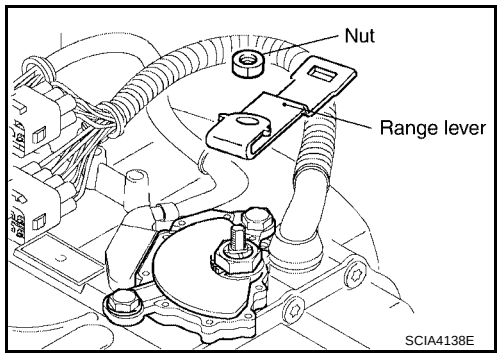

72. Install turbine revolution sensor in transaxle case.
73. Tighten turbine revolution sensor fixing bolt to specified torque. Refer to AT-614, "Components" .

CAUTION:
- **Do not reuse seal bolt.**
- **Apply ATF to O-ring.**

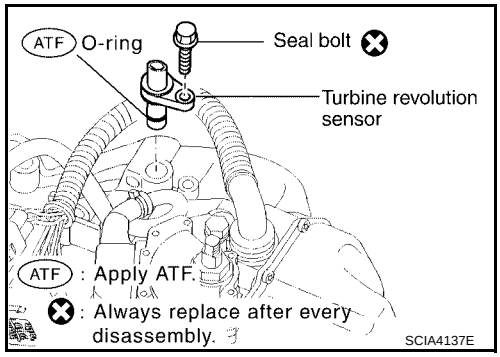

74. Install revolution sensor in transaxle case.
75. Tighten revolution sensor fixing bolt to specified torque. Refer to AT-614, "Components" .

CAUTION:
- **Do not reuse seal bolt.**
- **Apply ATF to O-ring.**

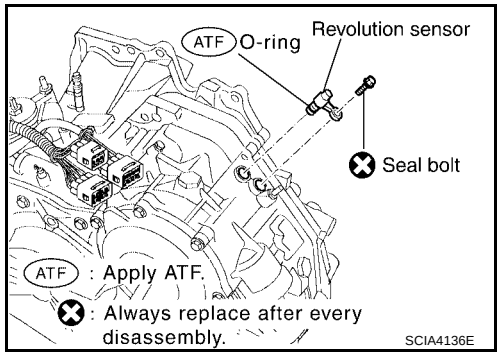

76. Install O-ring in A/T fluid charging pipe.

CAUTION:
- **Do not reuse O-ring.**
- **Apply petroleum jelly to O-ring.**

77. Install A/T fluid charging pipe in transaxle housing.
78. Install fluid cooler tube.

CAUTION:
Do not reuse copper washer.

79. Tighten fluid cooler tube union to specified torque. Refer to AT-614, "Components" .

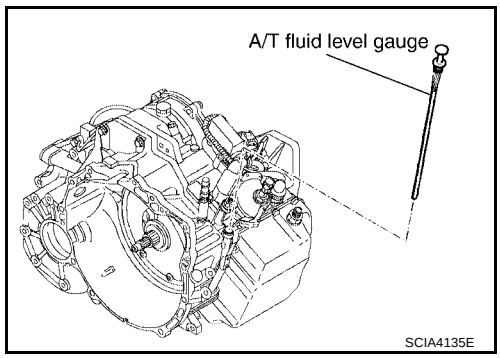

80. Install air breather hose.
81. Install A/T fluid level gauge.
82. Install drain plug in transaxle housing.

    CAUTION:
    Do not reuse gasket.
83. Tighten drain plug to specified torque. Refer to AT-614, "Components" .
84. Install torque converter.

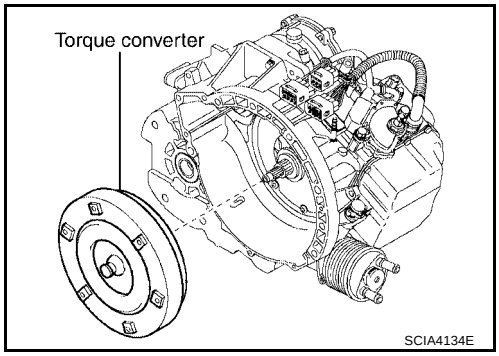

85. Check the distance of “C”.

    “C” : 14.0 mm (0.551 in)

    CAUTION:
    If the distance is out of standards, adjust within standards again.

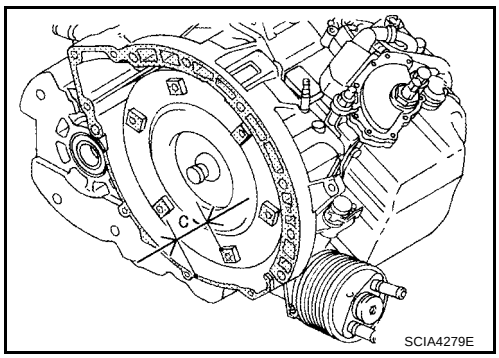

SERVICE DATA AND SPECIFICATIONS (SDS)

PFP:00030

General Specifications

UCS0010I

Engine		VQ35DE
Automatic transaxle model		RE5F22A
Automatic transaxle model code number		CK700
Stall torque ratio		1.8: 1
Transaxle gear ratio	1st	4.657
	2nd	3.032
	3rd	1.982
	4th	1.341
	5th	1.018
	Reverse	5.114
	Final drive	2.269
Recommended fluid		Genuine Nissan Matic K ATF*
Fluid capacity ℓ (US qt, Imp qt)		7.4 (7-7/8, 6-1/2)

CAUTION:

- **Use only Genuine Nissan Matic K ATF. Do not mix with other fluid.**
- **Using automatic transaxle fluid other than Genuine Nissan Matic K ATF will deteriorate in driveability and automatic transaxle durability, and may damage the automatic transaxle, which is not covered by the warranty.**

*: Refer to MA-10, "RECOMMENDED FLUIDS AND LUBRICANTS" .

Shift Schedule

UCS0010T

VEHICLE SPEED WHEN SHIFTING GEARS

Accelerator angle	Vehicle speed km/h (MPH) (Approx.)							
	$D_1 \rightarrow D_2$	$D_2 \rightarrow D_3$	$D_3 \rightarrow D_4$	$D_4 \rightarrow D_5$	$D_5 \rightarrow D_4$	$D_4 \rightarrow D_3$	$D_3 \rightarrow D_2$	$D_2 \rightarrow D_1$
100 %	67 (42)	105 (65)	170 (106)	241 (150)	230 (143)	160 (99)	92 (57)	45 (28)
90 %	67 (42)	105 (65)	170 (106)	241 (150)	230 (143)	160 (99)	92 (57)	45 (28)
80 %	65 (40)	100 (62)	152 (94)	227 (141)	178 (111)	142 (88)	86 (53)	45 (28)
70 %	53 (33)	80 (50)	125 (78)	185 (115)	147 (91)	137 (85)	68 (42)	38 (24)
60 %	46 (29)	71 (44)	106 (66)	156 (97)	108 (67)	78 (48)	46 (29)	22 (14)
50 %	43 (27)	67 (42)	97 (60)	145 (90)	98 (61)	68 (42)	40 (25)	18 (11)
40 %	38 (24)	60 (37)	89 (55)	130 (81)	89 (55)	56 (35)	30 (19)	13 (8)
30 %	33 (21)	50 (31)	70 (43)	108 (67)	68 (42)	45 (28)	25 (16)	12 (7)
20 %	23 (14)	35 (22)	49 (30)	77 (48)	49 (30)	32 (20)	22 (14)	8 (5)
10 %	17 (11)	29 (18)	39 (24)	58 (36)	44 (27)	32 (20)	22 (14)	8 (5)

VEHICLE SPEED WHEN PERFORMING AND RELEASING COMPLETE LOCK-UP

Accelerator angle	Vehicle speed km/h (MPH) (Approx.)	
	Lock-up “ON”	Lock-up “OFF”
50 %	190 (118)	137 (85)
15%	101 (63)	72 (45)
0 - 8 %	73 (45)	70 (43)

- Lock-up vehicle speed indicates the speed in D position.
- Perform lock-up inspection after warming up engine.
- Lock-up vehicle speed may vary depending on the driving conditions and circumstances.

VEHICLE SPEED WHEN PERFORMING AND RELEASING SLIP LOCK-UP

Accelerator angle	Gear position	Vehicle speed km/h (MPH) (Approx.)	
		Slip lock-up “ON”	Slip lock-up “OFF”
0 - 10 %	4th	45 (28)	42 (26)
	5th	58 (36)	55 (34)

- Slip lock-up vehicle speed indicates the speed in D position.
- Perform slip lock-up inspection after warming up engine.
- Slip lock-up vehicle speed may vary depending on the driving conditions and circumstances.

Stall Speed

UCS0010M

Stall speed	2,430 - 2,730 rpm

Line Pressure

UCS0010N

Engine speed	Line pressure kPa (kg/cm^2 , psi)	
	D, L positions	R position
At idle speed	333 - 392 (3.4 - 4.0, 48 - 57)	500 - 608 (5.1 - 6.2, 73 - 88)
At stall speed	1,285 - 1,393 (13.1 - 14.2, 186 - 202)	1,706 - 1,981 (17.4 - 20.2, 247 - 287)

Time Lag

UCS0010U

Selector lever	Time
N to D position	Less than 0.7 sec.
N to R position	Less than 1.2 sec.

Shift Solenoid Valves

UCS0010V

Shift position		Shift solenoid valve					Remarks
		A	B	C	D	E	
P		OFF (Open)	OFF (Closed)	OFF (Closed)	OFF (Open)	OFF (Closed)	PARK POSITION
R		OFF (Open)	OFF (Closed)	ON (Open)	OFF (Open)	ON (Open)	REVERSE POSITION
N		OFF (Open)	OFF (Closed)	OFF (Closed)	OFF (Open)	OFF (Closed)	NEUTRAL POSITION
D	1st	ON (Closed)	ON (Open)	ON (Open)	OFF (Open)	OFF (Closed)	Automatic shift 1 ⇔ 2 ⇔ 3 ⇔ 4 ⇔ 5
	1 ⇔ 2	OFF (Open)	OFF (Closed)	ON (Open)	OFF (Open)	OFF (Closed)	
	2nd	OFF (Open)	OFF (Closed)	ON (Open)	OFF (Open)	OFF (Closed)	
	2 ⇔ 3	OFF (Open)	OFF (Closed)	ON (Open)	ON (Closed)	ON (Open)	
	3rd	OFF (Open)	OFF (Closed)	ON (Open)	ON (Closed)	OFF (Closed)	
	3 ⇔ 4	OFF (Open)	OFF (Closed)	OFF (Closed)	ON (Closed)	ON (Open)	
	4th	OFF (Open)	OFF (Closed)	OFF (Closed)	ON (Closed)	OFF (Closed)	
	4 ⇔ 5	OFF (Open)	ON (Open)	OFF (Closed)	ON (Closed)	OFF (Closed)	
	5th	OFF (Open)	ON (Open)	OFF (Closed)	ON (Closed)	OFF (Closed)	

Shift position		Shift solenoid valve					Remarks
		A	B	C	D	E	
L	1st	ON (Closed)	ON (Open)	ON (Open)	OFF (Open)	OFF (Closed)	Automatic shift 1 ⇔ 2 ⇔ 3
	1 ⇔ 2	OFF (Open)	OFF (Closed)	ON (Open)	OFF (Open)	OFF (Closed)	
	2nd	OFF (Open)	OFF (Closed)	ON (Open)	OFF (Open)	OFF (Closed)	
	2 ⇔ 3	OFF (Open)	OFF (Closed)	ON (Open)	ON (Closed)	ON (Open)	
	3rd	OFF (Open)	OFF (Closed)	ON (Open)	ON (Closed)	OFF (Closed)	

NOTE:
When shifting D to L position or lever switch sets in “ON” position (indicated O/D OFF indicator lamp), down shift permission control is activated. Refer to AT-405, "Down Shift Permission Control" .

Solenoid Valves

UCS0010O

Solenoid valves	Resistance (Approx.)	Connector (Color)	Terminal
Shift solenoid valve A	11 - 16 Ω	F30 (BR)	2
Shift solenoid valve B		F62(GR)	1
Shift solenoid valve C		F62(GR)	4
Shift solenoid valve D		F30 (BR)	1
Shift solenoid valve E		F30 (BR)	5
Pressure control solenoid valve A	5.0 - 5.6 Ω	F62(GR)	3 - 6
Pressure control solenoid valve B		F30 (BR)	3 - 7
Pressure control solenoid valve C		F62(GR)	2 - 5

Specified resistance at 20°C (68°F).

Clutch, Gear and Brakes

UCS002LC

2ND BRAKE

Number of 2nd brake plates	4	
Number of 2nd brake discs	4	
Number of 2nd brake flange	1	
Piston stroke mm (in)	1.10 - 1.50 (0.0433 - 0.0591)	
Thickness of 2nd brake flanges	Thickness mm (in)	Part number*
	3.6 (0.142) 3.8 (0.150) 4.0 (0.157)	31537 8Y011 31537 8Y012 31537 8Y013

*: Always check with the Parts Department for the latest parts information.

2ND COAST BRAKE

Number of 2nd coast brake plates	3
Number of 2nd coast brake discs	3
Number of 2nd coast brake flange	1
Piston stroke mm (in)	0.76 - 1.44 (0.0299 - 0.0567)

B5 BRAKE

Manufactured on October 1, 2003 or earlier*1

*1 : Refer to AT-378, "INFORMATION OF SERIAL NUMBER" .

Number of B5 brake plates	6	
Number of B5 brake discs	6	
Number of B5 brake flange	1	
Number of B5 brake cushion plate	1	
Piston stroke mm (in)	2.34 - 2.70 (0.0921 - 0.1063)	
Thickness of B5 brake flanges	Thickness mm (in)	Part number*2
	5.0 (0.197) 5.1 (0.202) 5.2 (0.205) 5.3 (0.209) 5.5 (0.217)	31667 8Y010 31667 8Y015 31667 8Y011 31667 8Y013 31667 8Y014

*2 : Always check with the Parts Department for the latest parts information.

Manufactured on October 2, 2003 and later*1

*1 : Refer to AT-378, "INFORMATION OF SERIAL NUMBER" .

Number of B5 brake plates	6	
Number of B5 brake discs	6	
Number of B5 brake flange	1	
Number of B5 brake cushion plate	1	
Piston stroke mm (in)	2.34 - 2.70 (0.0921 - 0.1063)	
Thickness of B5 brake flanges	Thickness mm (in)	Part number*2
	5.0 (0.197) 5.1 (0.202) 5.2 (0.205) 5.3 (0.209) 5.5 (0.217)	31667 8Y016 31667 8Y017 31667 8Y018 31667 8Y019 31667 8Y020

*2 : Always check with the Parts Department for the latest parts information.

1ST AND REVERSE BRAKE

Number of 1st and reverse brake plates	4
Number of 1st and reverse brake discs	5
Number of 1st and reverse brake flanges	2
Piston stroke mm (in)	1.39 - 2.21 (0.0547 - 0.0870)

FORWARD AND DIRECT CLUTCH ASSEMBLY

Manufactured on October 1, 2003 or earlier*1

*1 : Refer to AT-378, "INFORMATION OF SERIAL NUMBER" .

Thickness of thrust washer races	Thickness mm (in)	Part number*2
	0.81 (0.0319) 1.15 (0.0453)	31435 8Y011 31435 8Y012
End play mm (in)	0.305 - 0.820 mm (0.0120 - 0.0323)	

*2 : Always check with the Parts Department for the latest parts information.

Manufactured on October 2, 2003 and later*1

*1 : Refer to AT-378, "INFORMATION OF SERIAL NUMBER" .

	Thickness mm (in)	Part number*2
Thickness of thrust washer races	0.81 (0.0319) 0.90 (0.0350) 1.00 (0.0400) 1.10 (0.0430) 1.20 (0.0470) 1.30 (0.0510) 1.40 (0.0550) 1.50 (0.0590)	31435 8Y060 31435 8Y061 31435 8Y062 31435 8Y063 31435 8Y064 31435 8Y065 31435 8Y066 31435 8Y067
End play mm (in)	0.188 - 0.570 mm (0.0074 - 0.0224)	

*2 : Always check with the Parts Department for the latest parts information.

U/D BRAKE

Piston type	Mark	Piston length mm (in)	Part number*
A	—	63.7 (2.508)	31615 8Y005
B	1	64.2 (2.528)	31615 8Y004
C	2	64.7 (2.547)	31615 8Y003
D	3	65.2 (2.567)	31615 8Y002
E	4	65.7 (2.587)	31615 8Y001
Piston stroke mm (in)		5.76 - 6.76 mm (0.2268 - 0.2661)	

*: Always check with the Parts Department for the latest parts information.

U/D RR PLANETARY RING GEAR SUB ASSEMBLY

Manufactured on October 2, 2003 and later*1

*1 : Refer to AT-378, "INFORMATION OF SERIAL NUMBER" .

	Thickness mm (in)	Part number*2
Thickness of adjust shims	0.81 (0.0319) 0.90 (0.0350) 1.00 (0.0400) 1.10 (0.0430) 1.20 (0.0470) 1.30 (0.0510) 1.40 (0.0550) 1.50 (0.0590) 1.60 (0.0630)	31435 8Y100 31435 8Y101 31435 8Y102 31435 8Y103 31435 8Y104 31435 8Y105 31435 8Y106 31435 8Y107 31435 8Y108

*2 : Always check with the Parts Department for the latest parts information.

U/D GEAR ASSEMBLY

Manufactured on October 2, 2003 and later*1

*1 : Refer to AT-378, "INFORMATION OF SERIAL NUMBER" .

	Thickness mm (in)	Part number*2
Thickness of thrust washer races	0.80 (0.0310) 0.90 (0.0350) 1.00 (0.0400) 1.10 (0.0430) 1.20 (0.0470) 1.30 (0.0510) 1.40 (0.0550) 1.50 (0.0590)	31435 8Y021 31435 8Y068 31435 8Y069 31435 8Y070 31435 8Y071 31435 8Y072 31435 8Y073 31435 8Y074

*2 : Always check with the Parts Department for the latest parts information.

PLANETALY SUN GEAR SUB ASSEMBLY

Inner diameter of planetary sun gear sub assembly bushing mm (in)	Standard	22.200 - 22.226 (0.8740 - 0.8750)
	Allowable limit	22.276 (0.8770)

PLANETALY GEAR ASSEMBLY

Inner diameter of planetary gear assembly bushing mm (in)	Standard	30.056 - 30.082 (1.1833 - 1.1843)
	Allowable limit	30.132 (1.1863)

Final Drive

UCS002LD

DIFFERENTIAL SIDE BEARING ADJUSTING SHIMS

Thickness mm (in)	Part number*	Thickness mm (in)	Part number*
1.00 (0.0394)	31438 8Y001	1.48 (0.0583)	31438 8Y013
1.05 (0.0413)	31438 8Y002	1.51 (0.0594)	31438 8Y014
1.10 (0.0433)	31438 8Y003	1.54 (0.0606)	31438 8Y015
1.15 (0.0453)	31438 8Y004	1.57 (0.0618)	31438 8Y016
1.20 (0.0472)	31438 8Y005	1.60 (0.0630)	31438 8Y017
1.25 (0.0492)	31438 8Y006	1.65 (0.0650)	31438 8Y018
1.30 (0.0512)	31438 8Y007	1.70 (0.0669)	31438 8Y019
1.33 (0.0524)	31438 8Y008	1.75 (0.0689)	31438 8Y020
1.36 (0.0535)	31438 8Y009	1.80 (0.0709)	31438 8Y021
1.39 (0.0547)	31438 8Y010	1.85 (0.0728)	31438 8Y022
1.42 (0.0559)	31438 8Y011	1.90 (0.0748)	31438 8Y023
1.45 (0.0571)	31438 8Y012		

*: Always check with the Parts Department for the latest parts information.

TURNING TORQUE

Turning torque of final drive assembly	0.7 - 1.2 N·m (0.08 - 0.12kg-m, 7 - 10 in-lb)

A/T Fluid Temperature Sensor

UCS0010P

Condition		Voltage (Approx.)	Resistance (Approx.)
ATF temperature	0°C (32°F)	4.0V	9.8 kΩ
	20°C (68°F)	3.0V	4.2 kΩ
	80°C (176°F)	0.8V	0.54 kΩ
	100°C (212°F)	0.5V	0.31 kΩ

Turbine Revolution Sensor

UCS0010Q

Condition	Signal	Voltage* (Approx.)
Connect 12V power supply and 100 Ω resistance, and then shake magnetic body.	HIGH	1.2 - 1.6V
	LOW	0.4 - 0.8V

*: Voltage with both end of 100 Ω resistance.

Revolution Sensor

UCS0010R

Condition	Signal	Voltage* (Approx.)
Connect 12V power supply and 100 Ω resistance, and then shake magnetic body.	HIGH	1.2 - 1.6V
	LOW	0.4 - 0.8V

*: Voltage with both end of 100 Ω resistance.