SECTION EC
ENGINE CONTROL SYSTEM

CONTENTS

SERVICE INFORMATION

INDEX FOR DTC

DTC No. Index

INFOID:0000000001717158

DTC*1		Items (CONSULT-III screen terms)	Reference page
CONSULT-III GST*2	ECM*3		
U1000	1000* 4	CAN COMM CIRCUIT	EC-139
U1001	1001*4	CAN COMM CIRCUIT	EC-139
U1010	1010	CONTROL UNIT (CAN)	EC-141
P0000	**0000**	**NO DTC IS DETECTED. FURTHER TESTING MAY BE REQUIRED.**	—
P0011	0011	INT/V TIM CONT-B1	EC-142
P0021	0021	INT/V TIM CONT-B2	EC-142
P0031	0031	A/F SEN1 HTR (B1)	EC-146
P0032	0032	A/F SEN1 HTR (B1)	EC-146
P0037	0037	HO2S2 HTR (B1)	EC-153
P0038	0038	HO2S2 HTR (B1)	EC-153
P0051	0051	A/F SEN1 HTR (B2)	EC-146
P0052	0052	A/F SEN1 HTR (B2)	EC-146
P0057	0057	HO2S2 HTR (B2)	EC-153
P0058	0058	HO2S2 HTR (B2)	EC-153
P0075	0075	INT/V TIM V/CIR-B1	EC-161
P0081	0081	INT/V TIM V/CIR-B2	EC-161
P0101	0101	MAF SEN/CIRCUIT-B1	EC-168
P0102	0102	MAF SEN/CIRCUIT-B1	EC-177
P0103	0103	MAF SEN/CIRCUIT-B1	EC-177
P0112	0112	IAT SEN/CIRCUIT-B1	EC-184
P0113	0113	IAT SEN/CIRCUIT-B1	EC-184
P0117	0117	ECT SEN/CIRC	EC-188
P0118	0118	ECT SEN/CIRC	EC-188
P0122	0122	TP SEN 2/CIRC-B1	EC-193
P0123	0123	TP SEN 2/CIRC-B1	EC-193
P0125	0125	ECT SENSOR	EC-199
P0127	0127	IAT SENSOR -B1	EC-202
P0128	0128	THERMSTAT FNCTN	EC-205
P0130	0130	A/F SENSOR1 (B1)	EC-207
P0131	0131	A/F SENSOR1 (B1)	EC-216
P0132	0132	A/F SENSOR1 (B1)	EC-224
P0133	0133	A/F SENSOR1 (B1)	EC-232
P0137	0137	HO2S2 (B1)	EC-241
P0138	0138	HO2S2 (B1)	EC-250
P0139	0139	HO2S2 (B1)	EC-262

DTC*1		Items (CONSULT-III screen terms)	Reference page
CONSULT-III GST*2	ECM*3		
P0150	0150	A/F SENSOR1 (B2)	EC-207
P0151	0151	A/F SENSOR1 (B2)	EC-216
P0152	0152	A/F SENSOR1 (B2)	EC-224
P0153	0153	A/F SENSOR1 (B2)	EC-232
P0157	0157	HO2S2 (B2)	EC-241
P0158	0158	HO2S2 (B2)	EC-250
P0159	0159	HO2S2 (B2)	EC-262
P0171	0171	FUEL SYS-LEAN-B1	EC-271
P0172	0172	FUEL SYS-RICH-B1	EC-281
P0174	0174	FUEL SYS-LEAN-B2	EC-271
P0175	0175	FUEL SYS-RICH-B2	EC-281
P0181	0181	FTT SENSOR	EC-291
P0182	0182	FTT SEN/CIRCUIT	EC-296
P0183	0183	FTT SEN/CIRCUIT	EC-296
P0222	0222	TP SEN 1/CIRC-B1	EC-301
P0223	0223	TP SEN 1/CIRC-B1	EC-301
P0300	0300	MULTI CYL MISFIRE	EC-307
P0301	0301	CYL 1 MISFIRE	EC-307
P0302	0302	CYL 2 MISFIRE	EC-307
P0303	0303	CYL 3 MISFIRE	EC-307
P0304	0304	CYL 4 MISFIRE	EC-307
P0305	0305	CYL 5 MISFIRE	EC-307
P0306	0306	CYL 6 MISFIRE	EC-307
P0327	0327	KNOCK SEN/CIRC-B1	EC-314
P0328	0328	KNOCK SEN/CIRC-B1	EC-314
P0335	0335	CKP SEN/CIRCUIT	EC-319
P0340	0340	CMP SEN/CIRC-B1	EC-325
P0345	0345	CMP SEN/CIRC-B2	EC-325
P0400	0400	EGR SYSTEM	EC-333
P0403	0403	EGR VOL CON/V CIR	EC-341
P0405	0405	EGR TEMP SEN/CIRC	EC-347
P0406	0406	EGR TEMP SEN/CIRC	EC-347
P0420	0420	TW CATALYST SYS-B1	EC-354
P0430	0430	TW CATALYST SYS-B2	EC-354
P0441	0441	EVAP PURG FLOW/MON	EC-359
P0442	0442	EVAP SMALL LEAK	EC-364
P0443	0443	PURG VOLUME CONT/V	EC-371
P0444	0444	PURG VOLUME CONT/V	EC-379
P0445	0445	PURG VOLUME CONT/V	EC-379
P0447	0447	VENT CONTROL VALVE	EC-385
P0448	0448	VENT CONTROL VALVE	EC-390
P0451	0451	EVAP SYS PRES SEN	EC-396

DTC*1		Items (CONSULT-III screen terms)	Reference page
CONSULT-III GST*2	ECM*3		
P0452	0452	EVAP SYS PRES SEN	EC-399
P0453	0453	EVAP SYS PRES SEN	EC-405
P0455	0455	EVAP GROSS LEAK	EC-412
P0456	0456	EVAP VERY SML LEAK	EC-418
P0460	0460	FUEL LEV SEN SLOSH	EC-426
P0461	0461	FUEL LEVEL SENSOR	EC-428
P0462	0462	FUEL LEVL SEN/CIRC	EC-430
P0463	0463	FUEL LEVL SEN/CIRC	EC-430
P0500	0500	VEH SPEED SEN/CIRC	EC-432
P0506	0506	ISC SYSTEM	EC-434
P0507	0507	ISC SYSTEM	EC-436
P0550	0550	PW ST P SEN/CIRC	EC-438
P0603	0603	ECM BACK UP/CIRCUIT	EC-443
P0605	0605	ECM	EC-447
P0643	0643	SENSOR POWER/CIRC	EC-449
P0705	0705	PNP SW/CIRC	AT-83
P0710	0710	ATF TEMP SEN/CIRC	AT-88
P0711	0711	FLUID TEMP SEN	AT-93
P0717	0717	TURBINE SENSOR	AT-98
P0722	0722	VHCL SPEED SEN·AT	AT-102
P0731	0731	A/T 1ST GR FNCTN	AT-108
P0732	0732	A/T 2ND GR FNCTN	AT-111
P0733	0733	A/T 3RD GR FNCTN	AT-116
P0734	0734	A/T 4TH GR FNCTN	AT-120
P0735	0735	A/T 5TH GR FNCTN	AT-123
P0744	0744	A/T TCC S/V FNCTN	AT-127
P0745	0745	PC SOL A(L/PRESS)	AT-130
P0750	0750	SHIFT SOL A	AT-135
P0755	0755	SHIFT SOL B	AT-140
P0760	0760	SHIFT SOL C	AT-145
P0762	0762	SFT SOL C STUCK ON	AT-150
P0765	0765	SHIFT SOL D	AT-155
P0770	0770	SHIFT SOL E	AT-160
P0775	0775	PC SOL B(SFT/PRS)	AT-165
P0780	0780	SHIFT	AT-170
P0795	0795	PC SOL C(TCC&SFT)	AT-174
P0797	0797	PC SOL C STC ON	AT-179
P0850	0850	P-N POS SW/CIRCUIT	EC-454
P0882	0882	TCM POWER INPT SIG	AT-188
P1148	1148	CLOSED LOOP-B1	EC-460
P1168	1168	CLOSED LOOP-B2	EC-460
P1211	1211	TCS C/U FUNCTN	EC-461

DTC*1		Items (CONSULT-III screen terms)	Reference page
CONSULT-III GST*2	ECM*3		
P1212	1212	TCS/CIRC	EC-462
P1217	1217	ENG OVER TEMP	EC-463
P1225	1225	CTP LEARNING-B1	EC-473
P1226	1226	CTP LEARNING-B1	EC-475
P1402	1402	EGR SYSTEM	EC-477
P1421	1421	COLD START CONTROL	EC-484
P1564	1564	ASCD SW	EC-486
P1572	1572	ASCD BRAKE SW	EC-492
P1574	1574	ASCD VHL SPD SEN	EC-499
P1610	1610	LOCK MODE	BL-182
P1611	1611	ID DISCARD IMM-ECM	BL-182
P1612	1612	CHAIN OF ECM-IMMU	BL-182
P1614	1614	CHAIN OF IMMU-KEY	BL-182
P1615	1615	DIFFERENCE OF KEY	BL-182
P1800	1800	VIAS S/V-1	EC-501
P1805	1805	BRAKE SW/CIRCUIT	EC-506
P2100	2100	ETC MOT PWR-B1	EC-510
P2101	2101	ETC FNCTN/CIRC-B1	EC-514
P2103	2103	ETC MOT PWR	EC-510
P2118	2118	ETC MOT-B1	EC-521
P2119	2119	ETC ACTR-B1	EC-526
P2122	2122	APP SEN 1/CIRC	EC-528
P2123	2123	APP SEN 1/CIRC	EC-528
P2127	2127	APP SEN 2/CIRC	EC-534
P2128	2128	APP SEN 2/CIRC	EC-534
P2135	2135	TP SENSOR-B1	EC-540
P2138	2138	APP SENSOR	EC-546
P2A00	2A00	A/F SENSOR 1 (B1)	EC-554
P2A03	2A03	A/F SENSOR 1 (B2)	EC-554

*1: 1st trip DTC No. is the same as DTC No.

*2: This number is prescribed by SAE J2012.

*3: In Diagnostic Test Mode II (Self-diagnostic results), this number is controlled by NISSAN.

*4: The troubleshooting for this DTC needs CONSULT-III.

PRECAUTIONS

Precaution for Supplemental Restraint System (SRS) "AIR BAG" and "SEAT BELT PRE-TENSIONER"

INFOID:0000000003288704

The Supplemental Restraint System such as “AIR BAG” and “SEAT BELT PRE-TENSIONER”, used along with a front seat belt, helps to reduce the risk or severity of injury to the driver and front passenger for certain types of collision. This system includes seat belt switch inputs and dual stage front air bag modules. The SRS system uses the seat belt switches to determine the front air bag deployment, and may only deploy one front air bag, depending on the severity of a collision and whether the front occupants are belted or unbelted.
Information necessary to service the system safely is included in the SRS and SB section of this Service Manual.

WARNING:

- **To avoid rendering the SRS inoperative, which could increase the risk of personal injury or death in the event of a collision which would result in air bag inflation, all maintenance must be performed by an authorized NISSAN/INFINITI dealer.**
- **Improper maintenance, including incorrect removal and installation of the SRS, can lead to personal injury caused by unintentional activation of the system. For removal of Spiral Cable and Air Bag Module, see the SRS section.**
- **Do not use electrical test equipment on any circuit related to the SRS unless instructed to in this Service Manual. SRS wiring harnesses can be identified by yellow and/or orange harnesses or harness connectors.**

On Board Diagnosis (OBD) System of Engine and A/T

INFOID:0000000001717161

The ECM has an on board diagnostic system. It will light up the malfunction indicator lamp (MIL) to warn the driver of a malfunction causing emission deterioration.

CAUTION:

- **Be sure to turn the ignition switch OFF and disconnect the negative battery cable before any repair or inspection work. The open/short circuit of related switches, sensors, solenoid valves, etc. will cause the MIL to light up.**
- **Be sure to connect and lock the connectors securely after work. A loose (unlocked) connector will cause the MIL to light up due to the open circuit. (Be sure the connector is free from water, grease, dirt, bent terminals, etc.)**
- **Certain systems and components, especially those related to OBD, may use a new style slide-locking type harness connector. For description and how to disconnect, refer to PG-71.**
- **Be sure to route and secure the harnesses properly after work. The interference of the harness with a bracket, etc. may cause the MIL to light up due to the short circuit.**
- **Be sure to connect rubber tubes properly after work. A misconnected or disconnected rubber tube may cause the MIL to light up due to the malfunction of the EVAP system or fuel injection system, etc.**
- **Be sure to erase the unnecessary malfunction information (repairs completed) from the ECM and TCM (Transmission control module) before returning the vehicle to the customer.**

Precaution

INFOID:0000000001717162

- **Always use a 12 volt battery as power source.**
- **Do not attempt to disconnect battery cables while engine is running.**
- **Before connecting or disconnecting the ECM harness connector, turn ignition switch OFF and disconnect negative battery cable. Failure to do so may damage the ECM because battery voltage is applied to ECM even if ignition switch is turned OFF.**
- **Before removing parts, turn ignition switch OFF and then disconnect negative battery cable.**

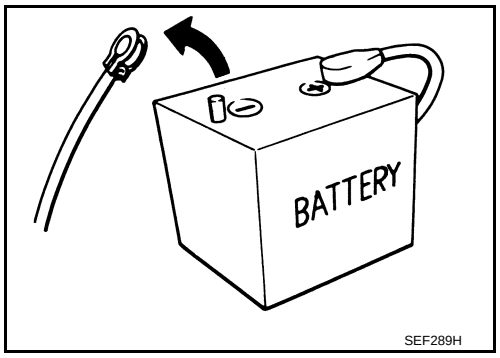

- **Do not disassemble ECM.**
- **If a battery cable is disconnected, the memory will return to the ECM value.**
  The ECM will now start to self-control at its initial value. Engine operation can vary slightly when the terminal is disconnected. However, this is not an indication of a malfunction. Do not replace parts because of a slight variation.
- **If the battery is disconnected, the following emission-related diagnostic information will be lost within 24 hours.**
- **Diagnostic trouble codes**
- **1st trip diagnostic trouble codes**
- **Freeze frame data**
- **1st trip freeze frame data**
- **System readiness test (SRT) codes**
- **Test values**

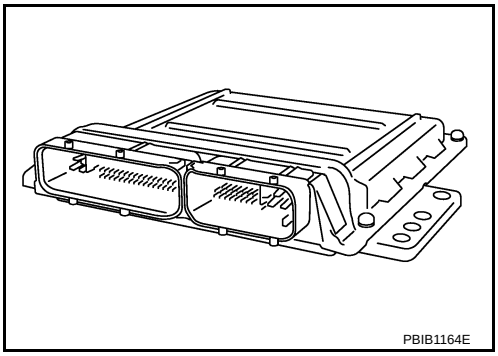

- **When connecting ECM harness connector, fasten it securely with levers as far as they will go as shown in the figure.**

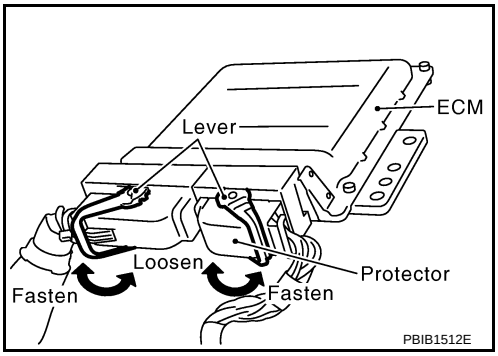

- **When connecting or disconnecting pin connectors into or from ECM, take care not to damage pin terminals (bend or break).**
  Make sure that there are not any bends or breaks on ECM pin terminal, when connecting pin connectors.
- **Securely connect ECM harness connectors.**
  A poor connection can cause an extremely high (surge) voltage to develop in coil and condenser, thus resulting in damage to ICs.
- **Keep engine control system harness at least 10 cm (4 in) away from adjacent harness, to prevent engine control system malfunctions due to receiving external noise, degraded operation of ICs, etc.**
- **Keep engine control system parts and harness dry.**
- **Before replacing ECM, perform ECM Terminals and Reference Value inspection and make sure ECM functions properly. Refer to EC-99, "ECM Terminal and Reference Value".**
- **Handle mass air flow sensor carefully to avoid damage.**
- **Do not disassemble mass air flow sensor.**
- **Do not clean mass air flow sensor with any type of detergent.**
- **Do not disassemble electric throttle control actuator.**
- **Even a slight leak in the air intake system can cause serious incidents.**
- **Do not shock or jar the camshaft position sensor (PHASE), crankshaft position sensor (POS).**

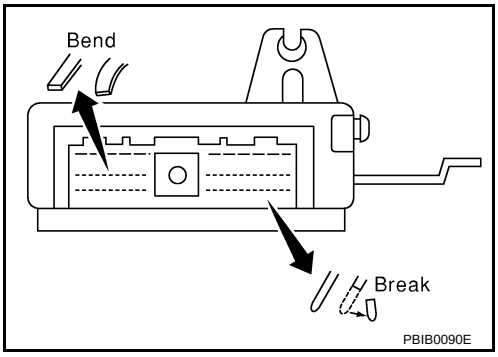

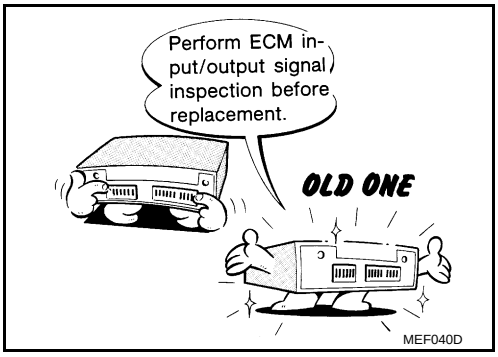

- **After performing each TROUBLE DIAGNOSIS, perform DTC Confirmation Procedure or Overall Function Check.**
  The DTC should not be displayed in the DTC Confirmation Procedure if the repair is completed. The Overall Function Check should be a good result if the repair is completed.

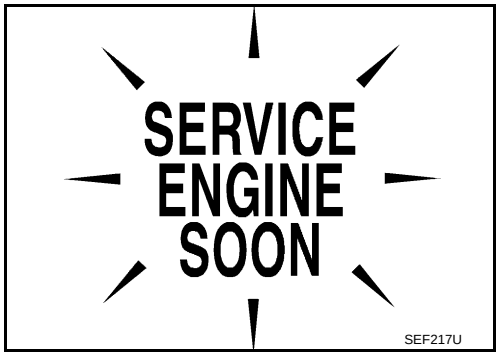

- **When measuring ECM signals with a circuit tester, never allow the two tester probes to contact.**
  Accidental contact of probes will cause a short circuit and damage the ECM power transistor.
- **Do not use ECM ground terminals when measuring input/output voltage. Doing so may result in damage to the ECM's transistor. Use a ground other than ECM terminals, such as the ground.**

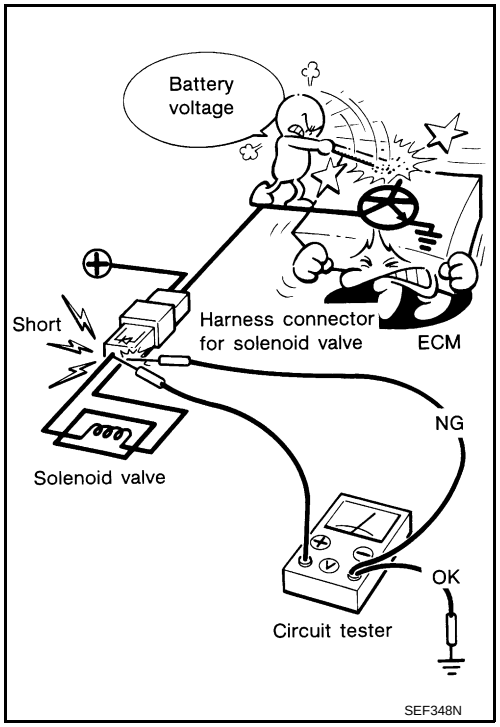

- **B1 indicates the bank 1, B2 indicates the bank 2 as shown in the figure.**

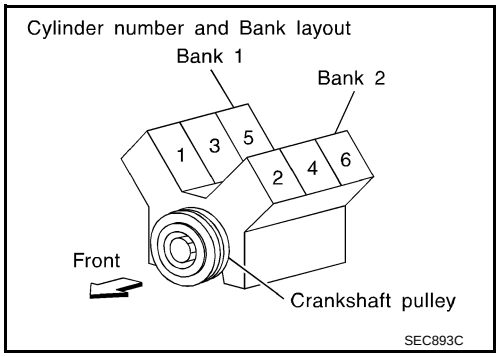

- **Do not operate fuel pump when there is no fuel in lines.**
- **Tighten fuel hose clamps to the specified torque.**

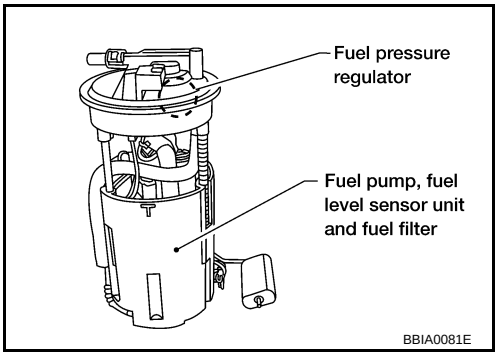

- **Do not depress accelerator pedal when starting.**
- **Immediately after starting, do not rev up engine unnecessarily.**
- **Do not rev up engine just prior to shutdown.**

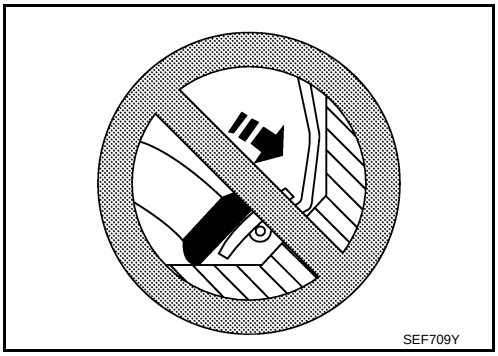

- **When installing C.B. ham radio or a mobile phone, be sure to observe the following as it may adversely affect electronic control systems depending on installation location.**
  - **Keep the antenna as far as possible from the electronic control units.**
  - **Keep the antenna feeder line more than 20 cm (8 in) away from the harness of electronic controls.**
    Do not let them run parallel for a long distance.
  - **Adjust the antenna and feeder line so that the standing-wave radio can be kept smaller.**
  - **Be sure to ground the radio to vehicle body.**

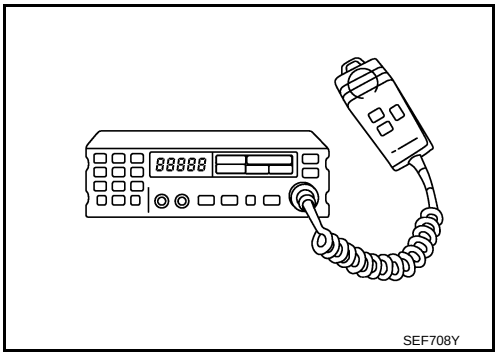

PREPARATION

Special Service Tool

INFOID:0000000001717163

The actual shapes of Kent-Moore tools may differ from those of special service tools illustrated here.

Tool number (Kent-Moore No.) Tool name	Description	
(J-44321) Fuel pressure gauge kit	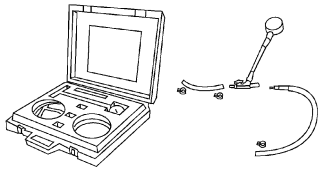 LEC642	Checking fuel pressure
(J-44321-6) Fuel pressure adapter	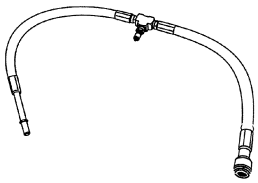 LBIA0376E	Connecting fuel pressure gauge to quick connector type fuel lines.
(J-45488) Quick connector release	 PBIC0198E	Remove fuel tube quick connectors in engine room.
EG17650301 (J-33984-A) Radiator cap tester adapter	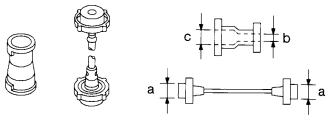 S-NT564	Adapting radiator cap tester to radiator cap and radiator filler neck **a: 28 (1.10) dia.** **b: 31.4 (1.236) dia.** **c: 41.3 (1.626) dia.** Unit: mm (in)
(J-23688) Engine coolant refractometer	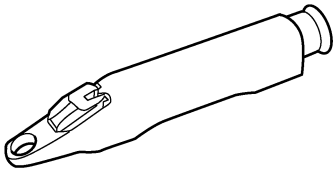 WBIA0539E	Checking concentration of ethylene glycol in the engine coolant

Commercial Service Tool

INFOID:0000000001717164

Tool name (Kent-Moore No.)	Description	
Leak detector i.e.: (J-41416)	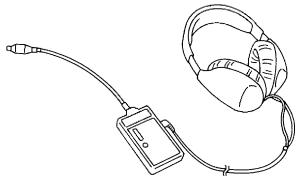 S-NT703	Locating the EVAP leak
EVAP service port adapter i.e.: (J-41413-OBD)	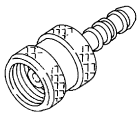 S-NT704	Applying positive pressure through EVAP service port
Fuel filler cap adapter i.e.: (MLR-8382)	 S-NT815	Checking fuel tank vacuum relief valve opening pressure
Socket wrench	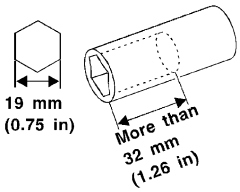 S-NT705	Removing and installing engine coolant temperature sensor
Oxygen sensor thread cleaner i.e.: (J-43897-18) (J-43897-12)	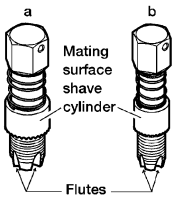 AEM488	Reconditioning the exhaust system threads before installing a new oxygen sensor. Use with anti-seize lubricant shown below. **a: 18 mm diameter with pitch 1.5 mm for Zirconia Oxygen Sensor** **b: 12 mm diameter with pitch 1.25 mm for Titania Oxygen Sensor**
Anti-seize lubricant i.e.: (Permatex™ 133AR or equivalent meeting MIL specification MIL-A-907)	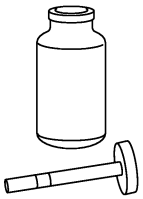 S-NT779	Lubricating oxygen sensor thread cleaning tool when reconditioning exhaust system threads.

ENGINE CONTROL SYSTEM

Schematic

INFOID:0000000001717165

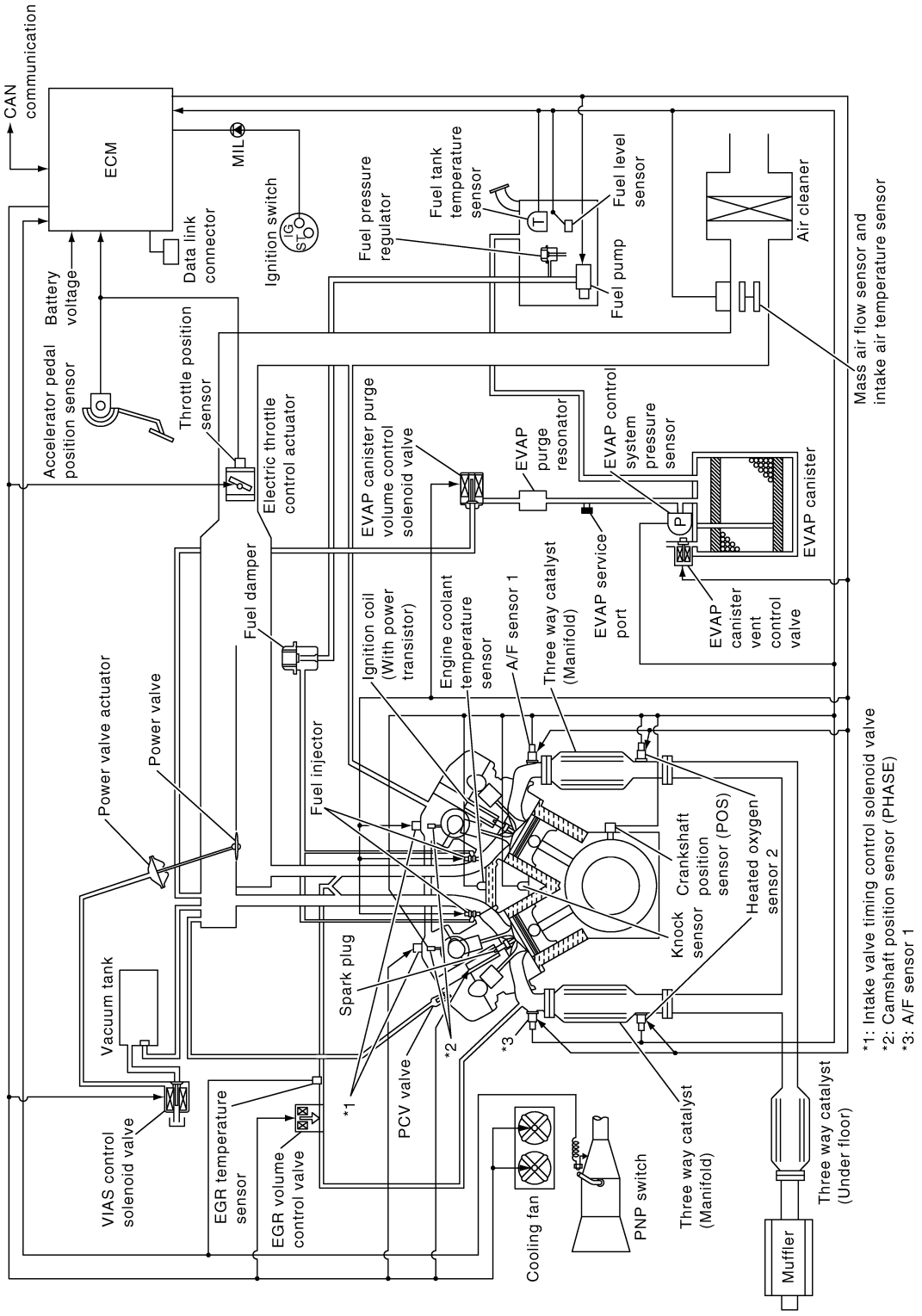

Multiport Fuel Injection (MFI) System

INFOID:0000000001717166

INPUT/OUTPUT SIGNAL CHART

Sensor	Input Signal to ECM	ECM function	Actuator
Crankshaft position sensor (POS)	Engine speed*3 Piston position	Fuel injection & mixture ratio control	Fuel injector
Camshaft position sensor (PHASE)			
Mass air flow sensor	Amount of intake air		
Engine coolant temperature sensor	Engine coolant temperature		
Air fuel ratio (A/F) sensor 1	Density of oxygen in exhaust gas		
Throttle position sensor	Throttle position		
Accelerator pedal position sensor	Accelerator pedal position		
Park/neutral position (PNP) switch	Gear position		
Knock sensor	Engine knocking condition		
Battery	Battery voltage*3		
Power steering pressure sensor	Power steering operation		
Heated oxygen sensor 2*1	Density of oxygen in exhaust gas		
Air conditioner switch	Air conditioner operation*2		
Wheel sensor	Vehicle speed*2		

*1: This sensor is not used to control the engine system. This is used only for the on board diagnosis.

*2: This signal is sent to the ECM through CAN communication line.

*3: ECM determines the start signal status by the signals of engine speed and battery voltage.

SYSTEM DESCRIPTION

The amount of fuel injected from the fuel injector is determined by the ECM. The ECM controls the length of time the valve remains open (injection pulse duration). The amount of fuel injected is a program value in the ECM memory. The program value is preset by engine operating conditions. These conditions are determined by input signals (for engine speed and intake air) from both the crankshaft position sensor and the mass air flow sensor.

VARIOUS FUEL INJECTION INCREASE/DECREASE COMPENSATION

In addition, the amount of fuel injected is compensated to improve engine performance under various operating conditions as listed below.

<Fuel increase>
- During warm-up
- When starting the engine
- During acceleration
- Hot-engine operation
- When shift lever is changed from N to D
- High-load, high-speed operation

<Fuel decrease>
- During deceleration
- During high engine speed operation

MIXTURE RATIO FEEDBACK CONTROL (CLOSED LOOP CONTROL)

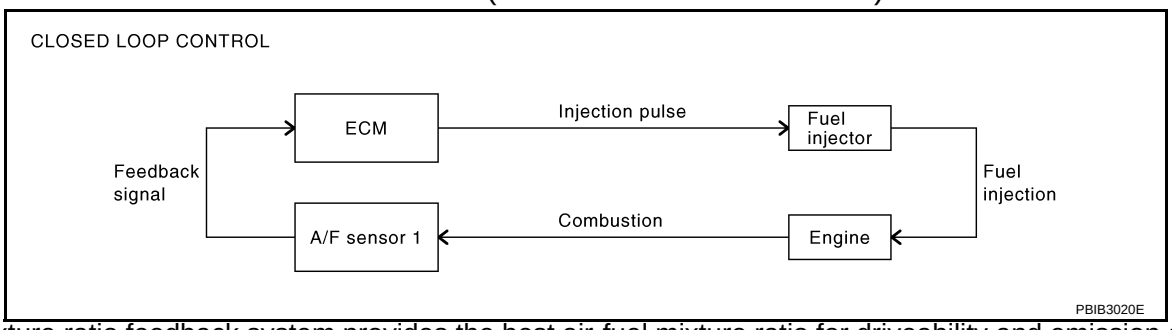

The mixture ratio feedback system provides the best air-fuel mixture ratio for driveability and emission control. The three way catalyst (Manifold) can then better reduce CO, HC and NOx emissions. This system uses air

fuel ratio (A/F) sensor 1 in the exhaust manifold to monitor whether the engine operation is rich or lean. The ECM adjusts the injection pulse width according to the sensor voltage signal. For more information about air fuel ratio (A/F) sensor 1, refer to EC-216. This maintains the mixture ratio within the range of stoichiometric (ideal air-fuel mixture).
This stage is referred to as the closed loop control condition.
Heated oxygen sensor 2 is located downstream of the three way catalyst (Manifold). Even if the switching characteristics of air fuel ratio (A/F) sensor 1 shift, the air-fuel ratio is controlled to stoichiometric by the signal from heated oxygen sensor 2.

Open Loop Control

The open loop system condition refers to when the ECM detects any of the following conditions. Feedback control stops in order to maintain stabilized fuel combustion.
- Deceleration and acceleration
- High-load, high-speed operation
- Malfunction of A/F sensor 1 or its circuit
- Insufficient activation of A/F sensor 1 at low engine coolant temperature
- High engine coolant temperature
- During warm-up
- After shifting from N to D
- When starting the engine

MIXTURE RATIO SELF-LEARNING CONTROL

The mixture ratio feedback control system monitors the mixture ratio signal transmitted from A/F sensor 1. This feedback signal is then sent to the ECM. The ECM controls the basic mixture ratio as close to the theoretical mixture ratio as possible. However, the basic mixture ratio is not necessarily controlled as originally designed. Both manufacturing differences (i.e., mass air flow sensor hot wire) and characteristic changes during operation (i.e., fuel injector clogging) directly affect mixture ratio.
Accordingly, the difference between the basic and theoretical mixture ratios is monitored in this system. This is then computed in terms of “injection pulse duration” to automatically compensate for the difference between the two ratios.
“Fuel trim” refers to the feedback compensation value compared against the basic injection duration. Fuel trim includes short term fuel trim and long term fuel trim.
“Short term fuel trim” is the short-term fuel compensation used to maintain the mixture ratio at its theoretical value. The signal from A/F sensor 1 indicates whether the mixture ratio is RICH or LEAN compared to the theoretical value. The signal then triggers a reduction in fuel volume if the mixture ratio is rich, and an increase in fuel volume if it is lean.
“Long term fuel trim” is overall fuel compensation carried out long-term to compensate for continual deviation of the short term fuel trim from the central value. Such deviation will occur due to individual engine differences, wear over time and changes in the usage environment.

FUEL INJECTION TIMING

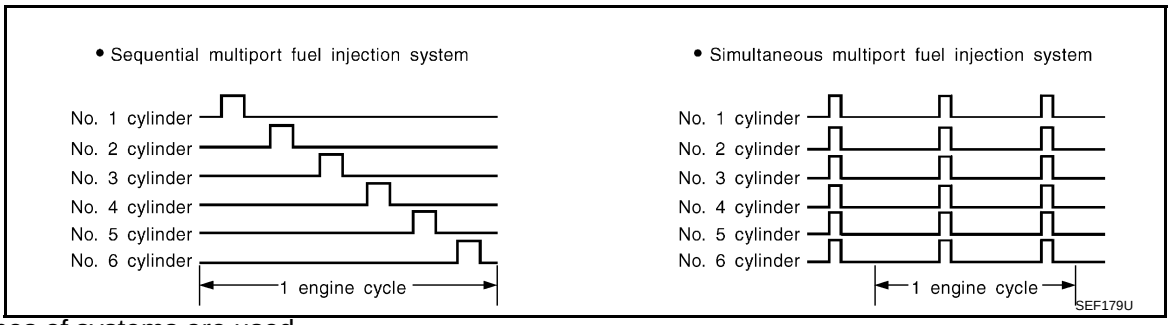

Two types of systems are used.

Sequential Multiport Fuel Injection System

Fuel is injected into each cylinder during each engine cycle according to the firing order. This system is used when the engine is running.

Simultaneous Multiport Fuel Injection System

Fuel is injected simultaneously into all six cylinders twice each engine cycle. In other words, pulse signals of the same width are simultaneously transmitted from the ECM.
The six fuel injectors will then receive the signals two times for each engine cycle.
This system is used when the engine is being started and/or if the fail-safe system (CPU) is operating.

FUEL SHUT-OFF

Fuel to each cylinder is cut off during deceleration, operation of the engine at excessively high speeds or operation of the vehicle at excessively high speeds.

Electronic Ignition (EI) System

INFOID:0000000001717167

INPUT/OUTPUT SIGNAL CHART

Sensor	Input Signal to ECM	ECM function	Actuator
Crankshaft position sensor (POS)	Engine speed*2 Piston position	Ignition timing control	Power transistor
Camshaft position sensor (PHASE)			
Mass air flow sensor	Amount of intake air		
Engine coolant temperature sensor	Engine coolant temperature		
Throttle position sensor	Throttle position		
Accelerator pedal position sensor	Accelerator pedal position		
Knock sensor	Engine knocking		
Park/neutral position (PNP) switch	Gear position		
Battery	Battery voltage*2		
Wheel sensor	Vehicle speed*1		

*1: This signal is sent to the ECM through CAN communication line.

*2: ECM determines the start signal status by the signals of engine speed and battery voltage.

SYSTEM DESCRIPTION

Firing order: 1 - 2 - 3 - 4 - 5 - 6

The ignition timing is controlled by the ECM to maintain the best air-fuel ratio for every running condition of the engine. The ignition timing data is stored in the ECM.

The ECM receives information such as the injection pulse width and camshaft position sensor (PHASE) signal. Computing this information, ignition signals are transmitted to the power transistor.

During the following conditions, the ignition timing is revised by the ECM according to the other data stored in the ECM.

- At starting
- During warm-up
- At idle
- At low battery voltage
- During acceleration

The knock sensor retard system is designed only for emergencies. The basic ignition timing is programmed within the anti-knocking zone, if recommended fuel is used under dry conditions. The retard system does not operate under normal driving conditions. If engine knocking occurs, the knock sensor monitors the condition. The signal is transmitted to the ECM. The ECM retards the ignition timing to eliminate the knocking condition.

Fuel Cut Control (at No Load and High Engine Speed)

INFOID:0000000001717168

INPUT/OUTPUT SIGNAL CHART

Sensor	Input Signal to ECM	ECM function	Actuator
Park/neutral position (PNP) switch	Neutral position	Fuel cut control	Fuel injector
Accelerator pedal position sensor	Accelerator pedal position		
Engine coolant temperature sensor	Engine coolant temperature		
Crankshaft position sensor (POS) Camshaft position sensor (PHASE)	Engine speed		
Wheel sensor	Vehicle speed*		

*: Signal is sent to the ECM through CAN communication line.

SYSTEM DESCRIPTION

If the engine speed is above 1,800 rpm under no load (for example, the shift position is neutral and engine speed is over 1,800 rpm) fuel will be cut off after some time. The exact time when the fuel is cut off varies based on engine speed.
Fuel cut will be operated until the engine speed reaches 1,500 rpm, then fuel cut will be cancelled.
NOTE:
This function is different from deceleration control listed under Multiport Fuel Injection (MFI) System, EC-19.

AIR CONDITIONING CUT CONTROL

Input/Output Signal Chart

INFOID:0000000001717169

Sensor	Input Signal to ECM	ECM function	Actuator
Air conditioner switch	Air conditioner ON signal*1	Air conditioner cut control	Air conditioner relay
Accelerator pedal position sensor	Accelerator pedal position		
Crankshaft position sensor (POS) Camshaft position sensor (PHASE)	Engine speed*2		
Engine coolant temperature sensor	Engine coolant temperature		
Battery	Battery voltage*2		
Refrigerant pressure sensor	Refrigerant pressure		
Power steering pressure sensor	Power steering operation		
Wheel sensor	Vehicle speed*1		

*1: This signal is sent to the ECM through CAN communication line.

*2: ECM determines the start signal status by the signals of engine speed and battery voltage.

System Description

INFOID:0000000001717170

This system improves engine operation when the air conditioner is used.
Under the following conditions, the air conditioner is turned OFF.

- When the accelerator pedal is fully depressed.
- When cranking the engine.
- At high engine speeds.
- When the engine coolant temperature becomes excessively high.
- When operating power steering during low engine speed or low vehicle speed.
- When engine speed is excessively low.
- When refrigerant pressure is excessively low or high.

AUTOMATIC SPEED CONTROL DEVICE (ASCD)

System Description

INFOID:0000000001717171

INPUT/OUTPUT SIGNAL CHART

Sensor	Input signal to ECM	ECM function	Actuator
ASCD brake switch	Brake pedal operation	ASCD vehicle speed control	Electric throttle control actuator
Stop lamp switch	Brake pedal operation		
ASCD steering switch	ASCD steering switch operation		
Park/Neutral position (PNP) switch	Gear position		
Combination meter	Vehicle speed*		
TCM	Powertrain revolution*		

*: This signal is sent to the ECM through CAN communication line.

BASIC ASCD SYSTEM

Refer to Owner's Manual for ASCD operating instructions.
Automatic Speed Control Device (ASCD) allows a driver to keep vehicle at predetermined constant speed without depressing accelerator pedal. Driver can set vehicle speed in advance between approximately 40 km/h (25 MPH) and 144 km/h (89 MPH).
ECM controls throttle angle of electric throttle control actuator to regulate engine speed.
Operation status of ASCD is indicated by CRUISE indicator and SET indicator in combination meter. If any malfunction occurs in ASCD system, it automatically deactivates control.
NOTE:
Always drive vehicle in safe manner according to traffic conditions and obey all traffic laws.

SET OPERATION

Press MAIN switch. (The CRUISE indicator in combination meter illuminates.)
When vehicle speed reaches a desired speed between approximately 40 km/h (25 MPH) and 144 km/h (89 MPH), press SET/COAST switch. (Then SET indicator in combination meter illuminates.)

ACCELERATOR OPERATION

If the RESUME/ACCELERATE switch is depressed during cruise control driving, increase the vehicle speed until the switch is released or vehicle speed reaches maximum speed controlled by the system.
And then ASCD will keep the new set speed.

CANCEL OPERATION

When any of following conditions exist, cruise operation will be canceled.
- CANCEL switch is depressed
- More than 2 switches at ASCD steering switch are depressed at the same time (Set speed will be cleared)
- Brake pedal is depressed
- Shift lever is changed to N, P, R position
- Vehicle speed decreased to 13 km/h (8 MPH) lower than the set speed
- VDC/TCS system is operated

When the ECM detects any of the following conditions, the ECM will cancel the cruise operation and inform the driver by blinking indicator lamp.
- Engine coolant temperature is slightly higher than the normal operating temperature, CRUISE lamp may blink slowly.
  When the engine coolant temperature decreases to the normal operating temperature, CRUISE lamp will stop blinking and the cruise operation will be able to work by depressing SET/COAST switch or RESUME/ACCELERATE switch.
- Malfunction for some self-diagnoses regarding ASCD control: SET lamp will blink quickly.

If MAIN switch is turned to OFF during ASCD is activated, all of ASCD operations will be canceled and vehicle speed memory will be erased.

COAST OPERATION

When the SET/COAST switch is depressed during cruise control driving, decrease vehicle set speed until the switch is released. And then ASCD will keep the new set speed.

RESUME OPERATION

When the RESUME/ACCELERATE switch is depressed after cancel operation other than depressing MAIN switch is performed, vehicle speed will return to last set speed. To resume vehicle set speed, vehicle condition must meet following conditions.

- Brake pedal is released
- A/T shift lever is in other than P and N positions
- Vehicle speed is greater than 40 km/h (25 MPH) and less than 144 km/h (89 MPH)

Component Description

INFOID:0000000001717172

ASCD STEERING SWITCH

Refer to EC-486.

ASCD BRAKE SWITCH

Refer to EC-492 and EC-564.

STOP LAMP SWITCH

Refer toEC-492, EC-506 and EC-564.

ELECTRIC THROTTLE CONTROL ACTUATOR

Refer to EC-510, EC-514, EC-521 and EC-526.

ASCD INDICATOR

Refer to EC-570.

CAN COMMUNICATION

System Description

INFOID:0000000001717173

CAN (Controller Area Network) is a serial communication line for real time application. It is an on-vehicle multiplex communication line with high data communication speed and excellent error detection ability. Many electronic control units are equipped onto a vehicle, and each control unit shares information and links with other control units during operation (not independent). In CAN communication, control units are connected with 2 communication lines (CAN H line, CAN L line) allowing a high rate of information transmission with less wiring. Each control unit transmits/receives data but selectively reads required data only.
Refer to LAN-41, "CAN System Specification Chart", about CAN communication for detail.

EVAPORATIVE EMISSION SYSTEM

Description

INFOID:0000000001717174

SYSTEM DESCRIPTION

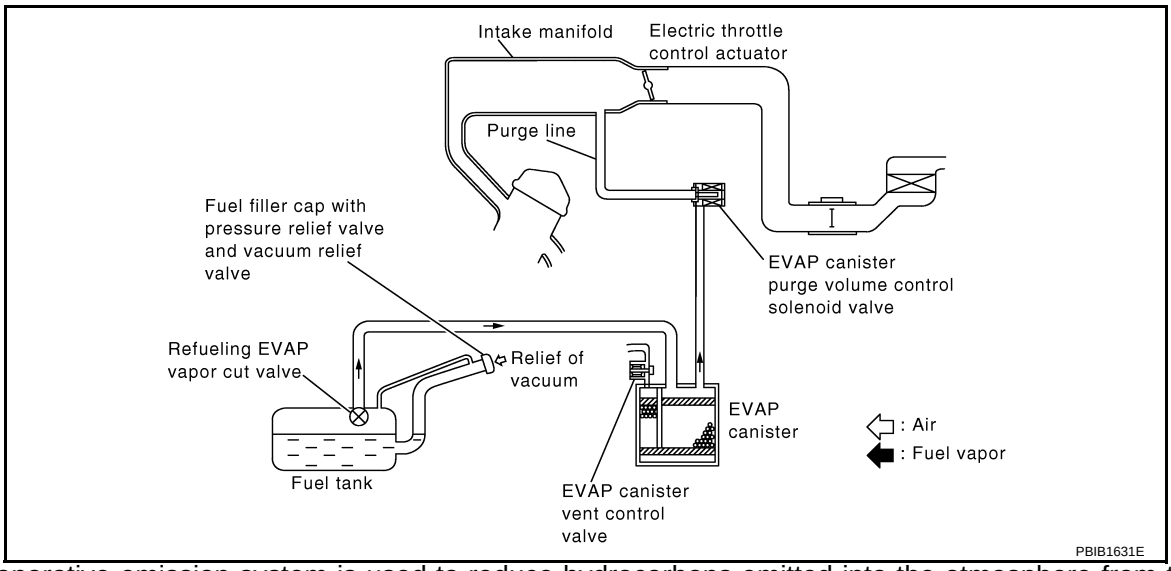

The evaporative emission system is used to reduce hydrocarbons emitted into the atmosphere from the fuel system. This reduction of hydrocarbons is accomplished by activated charcoals in the EVAP canister.
The fuel vapor in the sealed fuel tank is led into the EVAP canister which contains activated carbon and the vapor is stored there when the engine is not operating or when refueling to the fuel tank.
The vapor in the EVAP canister is purged by the air through the purge line to the intake manifold when the engine is operating. EVAP canister purge volume control solenoid valve is controlled by ECM. When the engine operates, the flow rate of vapor controlled by EVAP canister purge volume control solenoid valve is proportionally regulated as the air flow increases.
EVAP canister purge volume control solenoid valve also shuts off the vapor purge line during decelerating.

EVAPORATIVE EMISSION LINE DRAWING

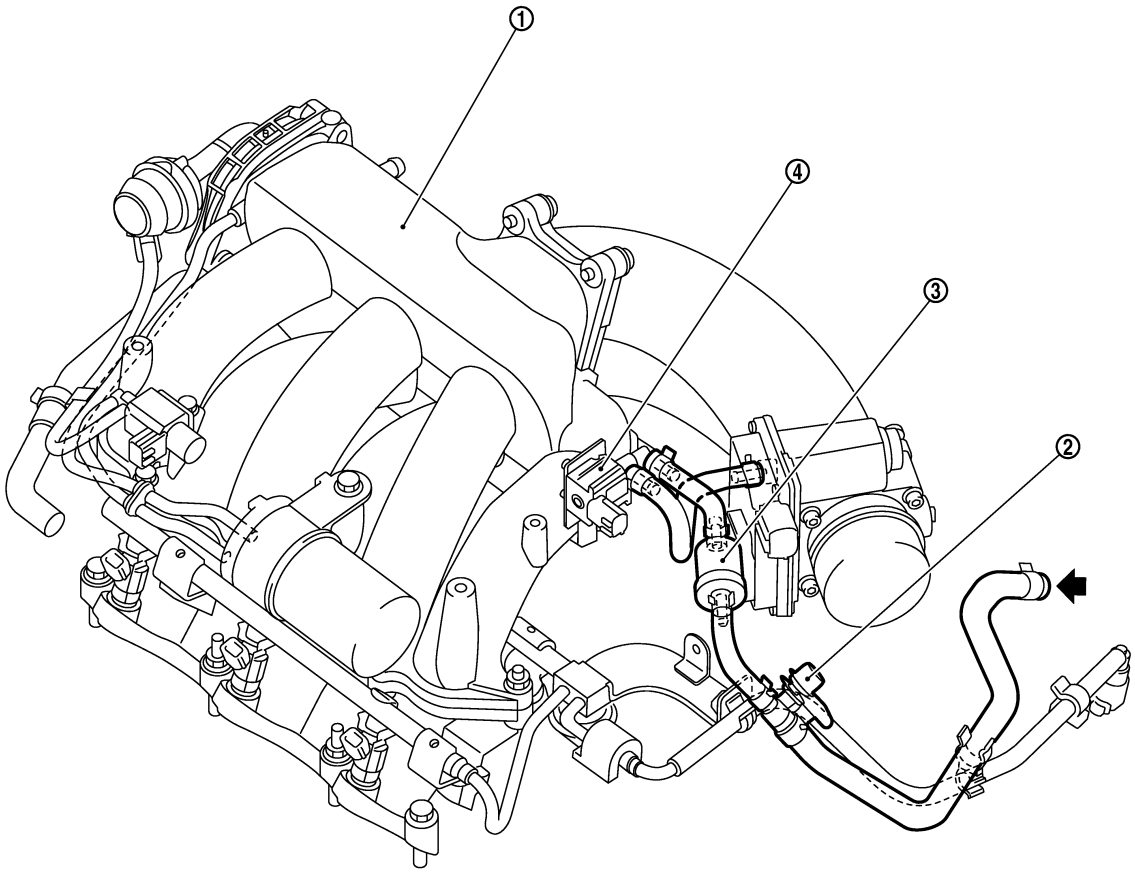

PBIB3073E

⬅: From next page

1. Intake manifold collector
2. EVAP service port
3. EVAP purge resonator
4. EVAP canister purge volume control solenoid valve

NOTE:
Do not use soapy water or any type of solvent while installing vacuum hose or purge hoses.

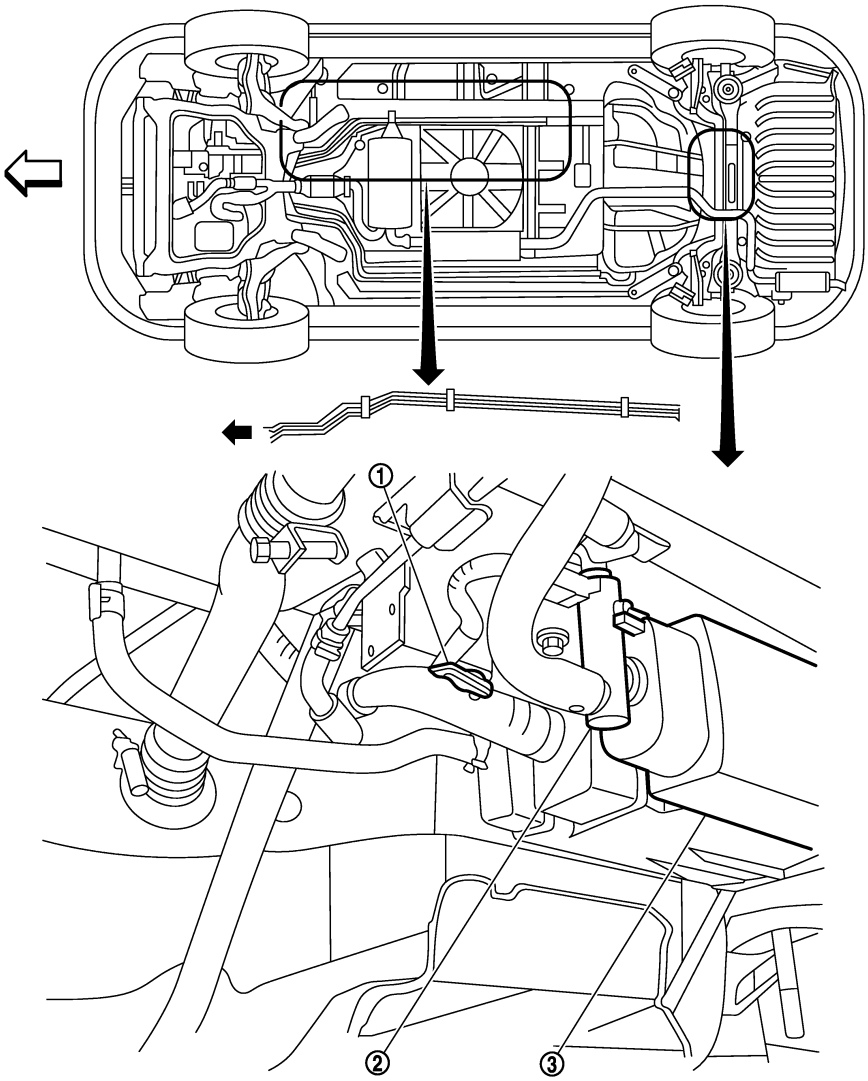

PBIB3069E

⇦: Vehicle front
⬅: To previous page

1. EVAP control system pressure sensor
2. EVAP canister vent control valve
3. EVAP canister

Component Inspection

INFOID:0000000001717175

EVAP CANISTER

Check EVAP canister as follows:

1. Block port **B**.
2. Blow air into port **A** and check that it flows freely out of port **C**.
3. Release blocked port **B**.
4. Apply vacuum pressure to port **B** and check that vacuum pressure exists at the ports **A** and **C**.
5. Block port **A** and **B**.
6. Apply pressure to port **C** and check that there is no leakage.

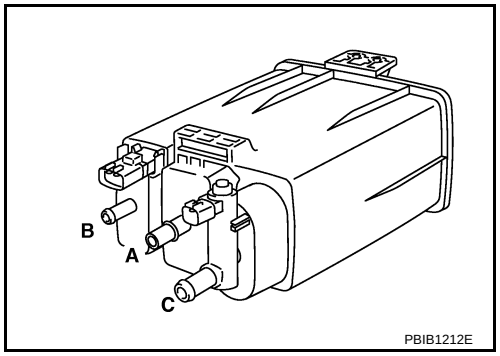

FUEL TANK VACUUM RELIEF VALVE (BUILT INTO FUEL FILLER CAP)

1. Wipe clean valve housing.

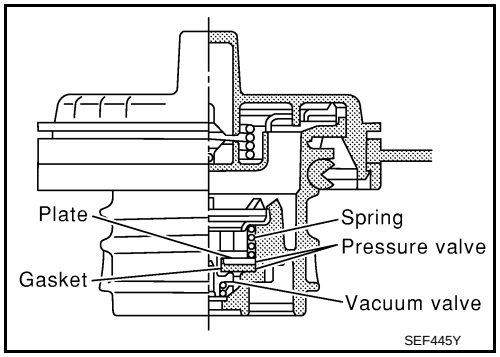

2. Check valve opening pressure and vacuum.

Pressure: **15.3 - 20.0 kPa (0.156 - 0.204 kg/cm^2, 2.22 - 2.90 psi)**

Vacuum: **–6.0 to –3.3 kPa (–0.061 to –0.034 kg/cm^2, –0.87 to –0.48 psi)**

3. If out of specification, replace fuel filler cap as an assembly.

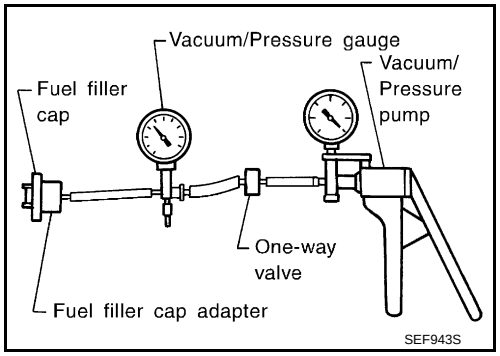

CAUTION:
Use only a genuine fuel filler cap as a replacement. If an incorrect fuel filler cap is used, the MIL may come on.

EVAP CANISTER PURGE VOLUME CONTROL SOLENOID VALVE
Refer to EC-377.

FUEL TANK TEMPERATURE SENSOR
Refer to EC-294.

EVAP CANISTER VENT CONTROL VALVE
Refer to EC-389.

EVAP CONTROL SYSTEM PRESSURE SENSOR
Refer to EC-398.

EVAP SERVICE PORT

Positive pressure is delivered to the EVAP system through the EVAP service port. If fuel vapor leakage in the EVAP system occurs, use a leak detector to locate the leak.

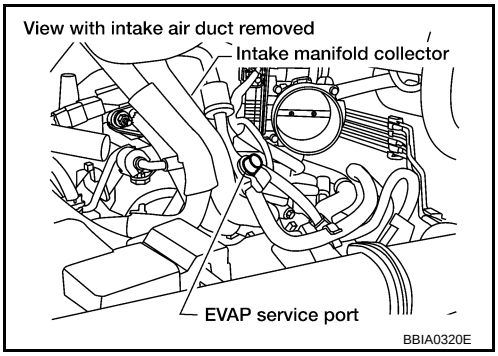

Removal and Installation

INFOID:0000000001717176

EVAP CANISTER

Tighten EVAP canister as shown in the figure.

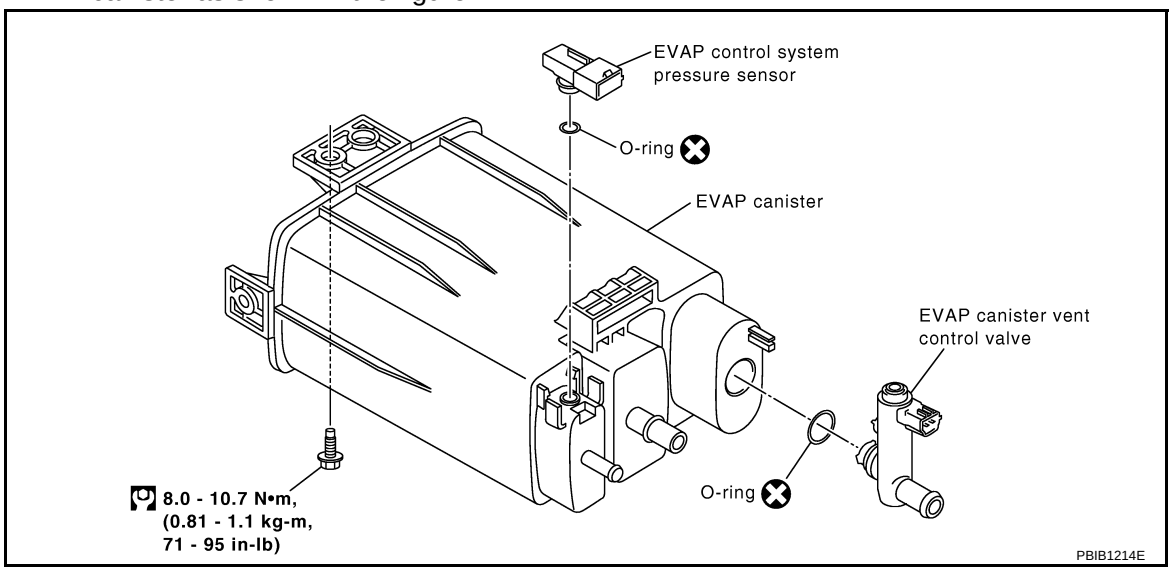

EVAP CANISTER VENT CONTROL VALVE

1. Turn EVAP canister vent control valve counterclockwise.
2. Remove the EVAP canister vent control valve.

Always replace O-ring with a new one.

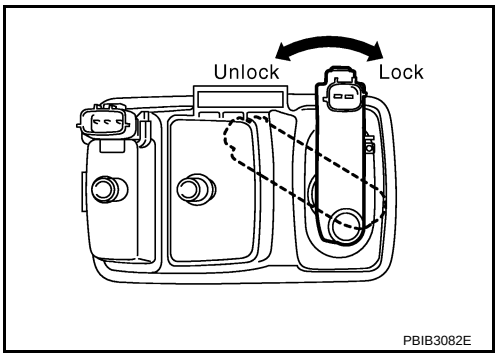

How to Detect Fuel Vapor Leakage

INFOID:0000000001717177

CAUTION:

- **Never use compressed air or a high pressure pump.**
- **Do not exceed 4.12 kPa (0.042 kg/cm^2, 0.6 psi) of pressure in EVAP system.**

NOTE:

- Do not start engine.
- Improper installation of EVAP service port adapter to the EVAP service port may cause a leak.

WITH CONSULT-III

1. Attach the EVAP service port adapter securely to the EVAP service port.
2. Also attach the pressure pump and hose to the EVAP service port adapter.

3. Turn ignition switch ON.
4. Select the “EVAP SYSTEM CLOSE” of “WORK SUPPORT MODE” with CONSULT-III.
5. Touch “START”. A bar graph (Pressure indicating display) will appear on the screen.
6. Apply positive pressure to the EVAP system until the pressure indicator reaches the middle of the bar graph.
7. Remove EVAP service port adapter and hose with pressure pump.
8. Locate the leak using a leak detector. Refer to EC-28, "Description".

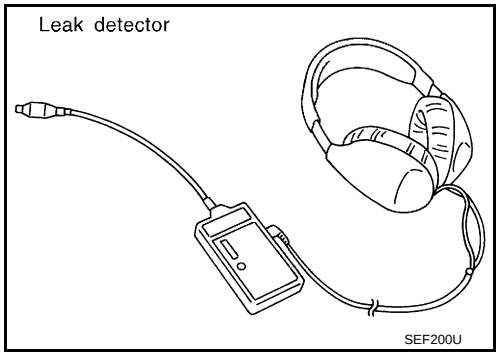

WITHOUT CONSULT-III

1. Attach the EVAP service port adapter securely to the EVAP service port.
2. Also attach the pressure pump with pressure gauge to the EVAP service port adapter.

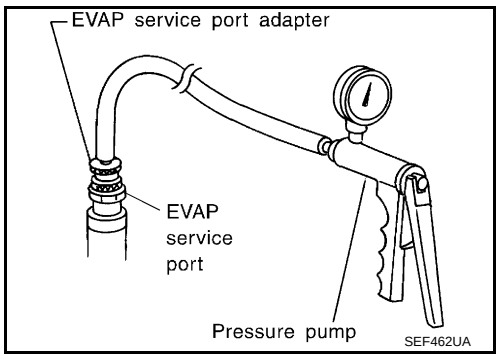

3. Apply battery voltage between the terminals of EVAP canister vent control valve to make a closed EVAP system.

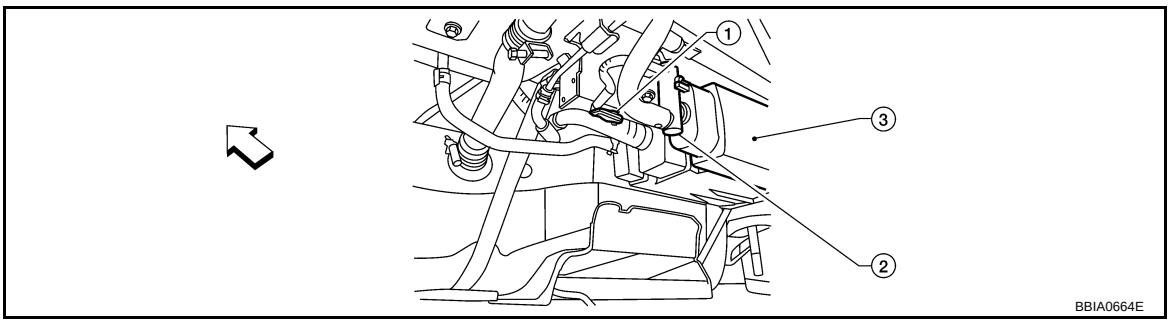

⇦: Vehicle front

1. EVAP control system pressure sensor 2. EVAP canister vent control valve 3. EVAP canister

4. To locate the leak, deliver positive pressure to the EVAP system until pressure gauge points reach 1.38 to 2.76 kPa (0.014 to 0.028 kg/cm^2, 0.2 to 0.4 psi).
5. Remove EVAP service port adapter and hose with pressure pump.
6. Locate the leak using a leak detector. Refer to EC-28, "Description".

ON BOARD REFUELING VAPOR RECOVERY (ORVR)

System Description

INFOID:0000000001717178

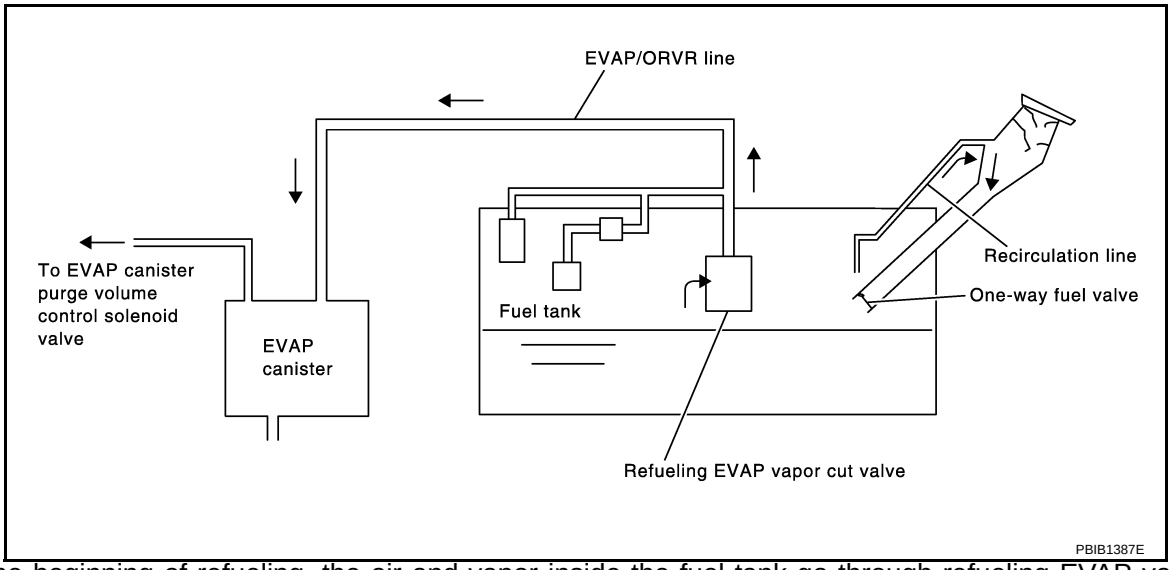

From the beginning of refueling, the air and vapor inside the fuel tank go through refueling EVAP vapor cut valve and EVAP/ORVR line to the EVAP canister. The vapor is absorbed by the EVAP canister and the air is released to the atmosphere.

When the refueling has reached the full level of the fuel tank, the refueling EVAP vapor cut valve is closed and refueling is stopped because of auto shut-off. The vapor which was absorbed by the EVAP canister is purged during driving.

WARNING:

When conducting inspections below, be sure to observe the following:

- **Put a “CAUTION: FLAMMABLE” sign in workshop.**
- **Do not smoke while servicing fuel system. Keep open flames and sparks away from work area.**
- **Be sure to furnish the workshop with a CO_2 fire extinguisher.**

CAUTION:

- **Before removing fuel line parts, carry out the following procedures:**
- **Put drained fuel in an explosion-proof container and put lid on securely.**
- **Release fuel pressure from fuel line. Refer to EC-75, "Fuel Pressure Check".**
- **Disconnect battery ground cable.**
- **Always replace O-ring when the fuel gauge retainer is removed.**
- **Do not kink or twist hose and tube when they are installed.**
- **Do not tighten hose and clamps excessively to avoid damaging hoses.**
- **After installation, run engine and check for fuel leaks at connection.**
- **Do not attempt to top off the fuel tank after the fuel pump nozzle shuts off automatically. Continued refueling may cause fuel overflow, resulting in fuel spray and possibly a fire.**

Diagnosis Procedure

INFOID:0000000001717179

SYMPTOM: FUEL ODOR FROM EVAP CANISTER IS STRONG.

1. CHECK EVAP CANISTER

1. Remove EVAP canister with EVAP canister vent control valve and EVAP control system pressure sensor attached.
2. Weigh the EVAP canister with EVAP canister vent control valve and EVAP control system pressure sensor attached.
   The weight should be less than 2.1 kg (4.6 lb).

OK or NG

OK >> GO TO 2.
NG >> GO TO 3.

2. CHECK IF EVAP CANISTER SATURATED WITH WATER

Does water drain from the EVAP canister?

Yes or No

Yes >> GO TO 3.
No >> GO TO 5.

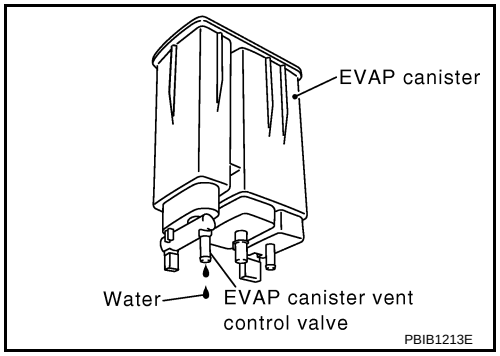

3. REPLACE EVAP CANISTER

Replace EVAP canister with a new one.

>> GO TO 4.

4. DETECT MALFUNCTIONING PART

Check the EVAP hose between EVAP canister and vehicle frame for clogging or poor connection.

>> Repair or replace EVAP hose.

5. CHECK REFUELING EVAP VAPOR CUT VALVE

Refer to EC-36, "Component Inspection".

OK or NG

OK >> **INSPECTION END**
NG >> Replace refueling EVAP vapor cut valve with fuel tank.

SYMPTOM: CANNOT REFUEL/FUEL ODOR FROM THE FUEL FILLER OPENING IS STRONG WHILE REFUELING.

1. CHECK EVAP CANISTER

1. Remove EVAP canister with EVAP canister vent control valve and EVAP control system pressure sensor attached.
2. Weigh the EVAP canister with EVAP canister vent control valve and EVAP control system pressure sensor attached.
   The weight should be less than 2.1 kg (4.6 lb).

OK or NG

OK >> GO TO 2.
NG >> GO TO 3.

2. CHECK IF EVAP CANISTER SATURATED WITH WATER

Does water drain from the EVAP canister?

Yes or No

Yes >> GO TO 3.
No >> GO TO 5.

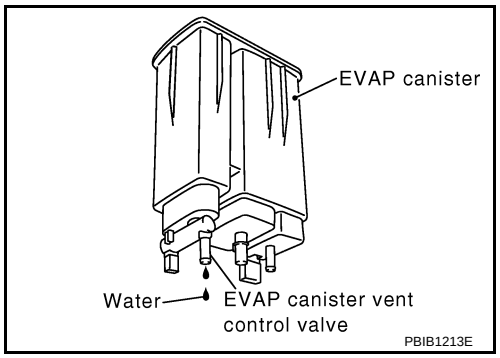

3. REPLACE EVAP CANISTER

Replace EVAP canister with a new one.

>> GO TO 4.

4. DETECT MALFUNCTIONING PART

Check the EVAP hose between EVAP canister and vehicle frame for clogging or poor connection.

>> Repair or replace EVAP hose.

5. CHECK VENT HOSES AND VENT TUBES

Check hoses and tubes between EVAP canister and refueling EVAP vapor cut valve for clogging, kink, looseness and improper connection.

OK or NG

OK >> GO TO 6.
NG >> Repair or replace hoses and tubes.

6. CHECK FILLER NECK TUBE

Check recirculation line for clogging, dents and cracks.

OK or NG

OK >> GO TO 7.
NG >> Replace filler neck tube.

7. CHECK REFUELING EVAP VAPOR CUT VALVE

Refer to EC-36, "Component Inspection".

OK or NG

OK >> GO TO 8.
NG >> Replace refueling EVAP vapor cut valve with fuel tank.

8. CHECK FUEL FILLER TUBE

Check filler neck tube and hose connected to the fuel tank for clogging, dents and cracks.

OK or NG

OK >> GO TO 9.
NG >> Replace fuel filler tube.

9. CHECK ONE-WAY FUEL VALVE-I

Check one-way valve for clogging.

OK or NG

OK >> GO TO 10.
NG >> Repair or replace one-way fuel valve with fuel tank.

10. CHECK ONE-WAY FUEL VALVE-II

1. Make sure that fuel is drained from the tank.
2. Remove fuel filler tube and hose.
3. Check one-way fuel valve for operation as follows.
   When a stick is inserted, the valve should open, when removing stick it should close.
   Do not drop any material into the tank.

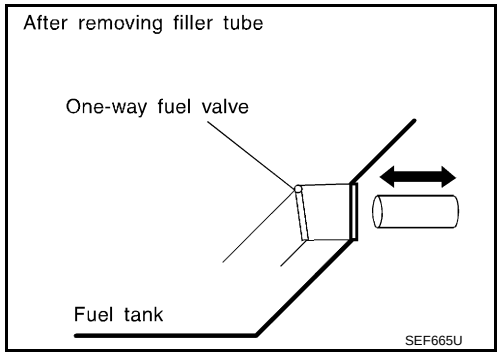

OK or NG

OK >> **INSPECTION END**
NG >> Replace fuel filler tube or replace one-way fuel valve with fuel tank.

Component Inspection

INFOID:0000000001717180

REFUELING EVAP VAPOR CUT VALVE

With CONSULT-III

1. Remove fuel tank. Refer to FL-9.
2. Drain fuel from the tank as follows:
a. Remove fuel feed hose located on the fuel gauge retainer.
b. Connect a spare fuel hose, one side to fuel gauge retainer where the hose was removed and the other side to a fuel container.
c. Drain fuel using “FUEL PUMP RELAY” in “ACTIVE TEST” mode with CONSULT-III.
3. Check refueling EVAP vapor cut valve for being stuck to close as follows.
Blow air into the refueling EVAP vapor cut valve (from the end of EVAP/ORVR line hose), and check that the air flows freely into the tank.
4. Check refueling EVAP vapor cut valve for being stuck to open as follows.
a. Connect vacuum pump to hose end.
b. Remove fuel gauge retainer with fuel gauge unit.
Always replace O-ring with new one.
c. Put fuel tank upside down.
d. Apply vacuum pressure to hose end [–13.3 kPa (–100 mmHg, –3.94 inHg)] with fuel gauge retainer remaining open and check that the pressure is applicable.

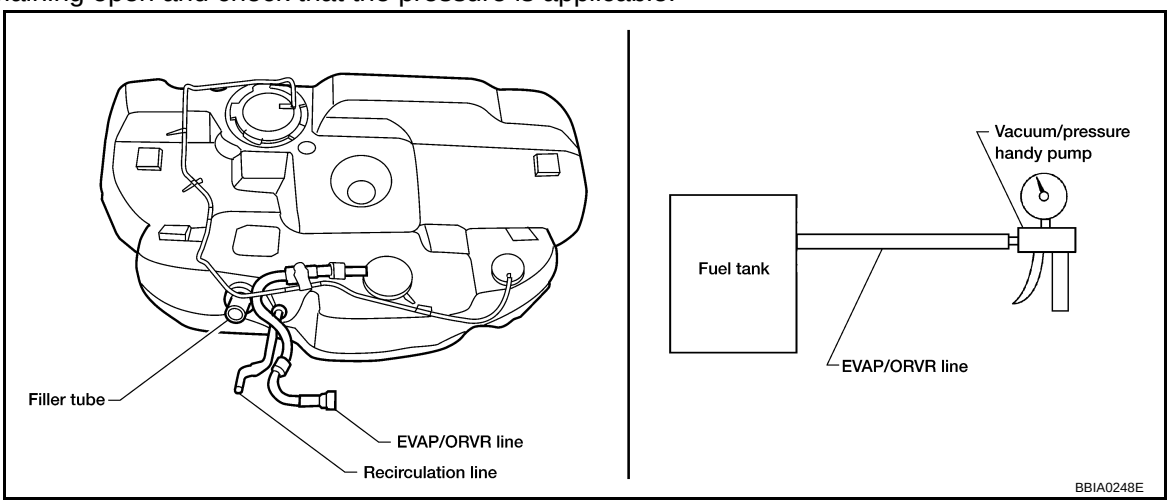

Without CONSULT-III
1. Remove fuel tank. Refer to FL-9.
2. Drain fuel from the tank as follows:
a. Remove fuel gauge retainer.
b. Drain fuel from the tank using a handy pump into a fuel container.
3. Check refueling EVAP vapor cut valve for being stuck to close as follows.
Blow air into the refueling EVAP vapor cut valve (from the end of EVAP/ORVR line hose), and check that the air flows freely into the tank.
4. Check refueling EVAP vapor cut valve for being stuck to open as follows.
a. Connect vacuum pump to hose end.
b. Remove fuel gauge retainer with fuel gauge unit.
Always replace O-ring with new one.
c. Put fuel tank upside down.

d. Apply vacuum pressure to hose end [–13.3 kPa (–100 mmHg, –3.94 inHg)] with fuel gauge retainer remaining open and check that the pressure is applicable.

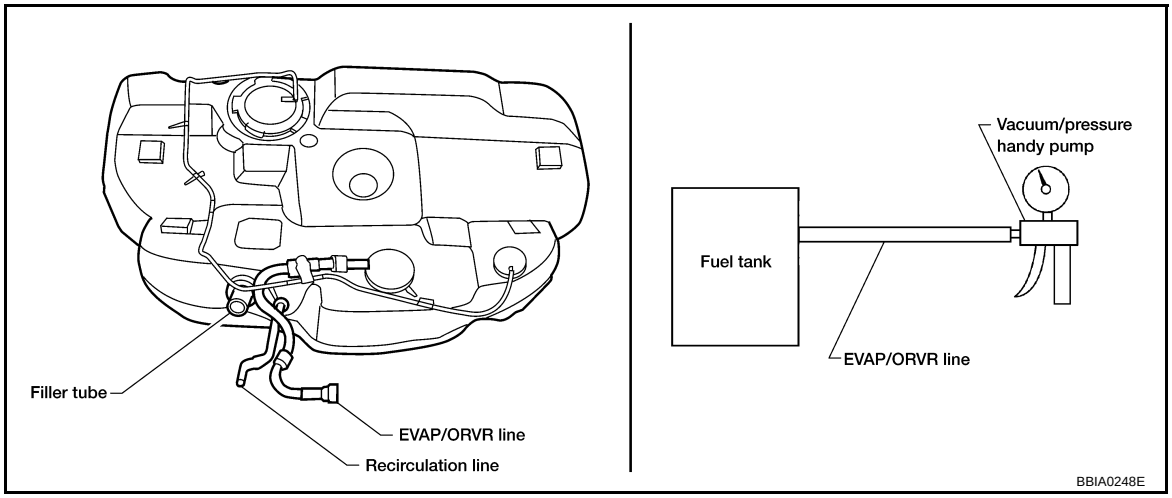

POSITIVE CRANKCASE VENTILATION

Description

INFOID:0000000001717181

SYSTEM DESCRIPTION

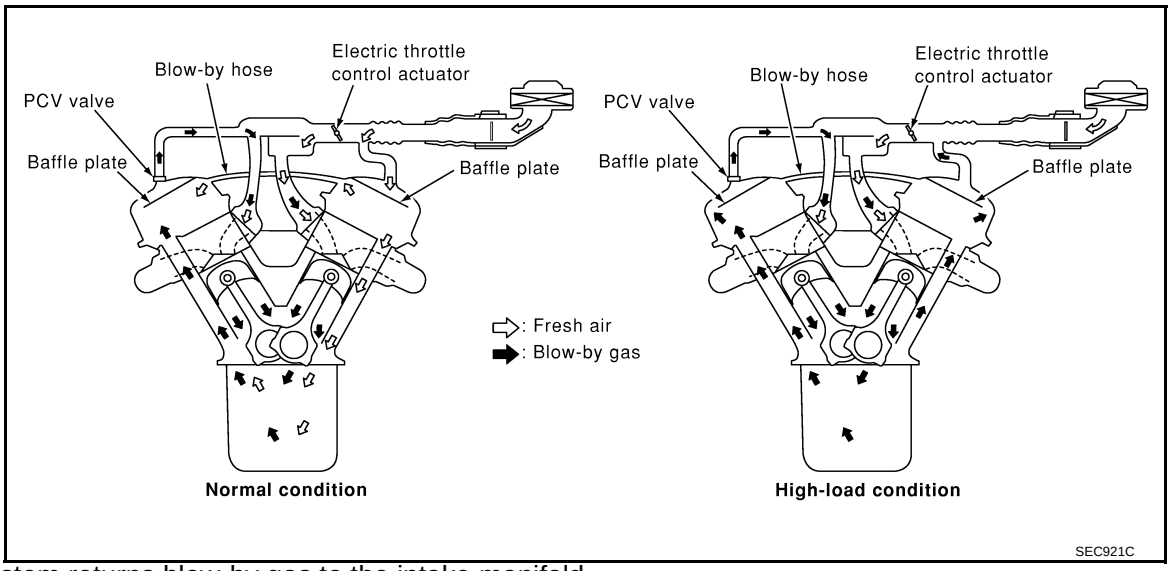

This system returns blow-by gas to the intake manifold.
The positive crankcase ventilation (PCV) valve is provided to conduct crankcase blow-by gas to the intake manifold. During partial throttle operation of the engine, the intake manifold sucks the blow-by gas through the PCV valve. Normally, the capacity of the valve is sufficient to handle any blow-by and a small amount of ventilating air. The ventilating air is then drawn from the air inlet tubes into the crankcase. In this process the air passes through the hose connecting air inlet tubes to rocker cover. Under full-throttle condition, the manifold vacuum is insufficient to draw the blow-by flow through the valve. The flow goes through the hose connection in the reverse direction.
On vehicles with an excessively high blow-by, the valve does not meet the requirement. This is because some of the flow will go through the hose connection to the air inlet tubes under all conditions.

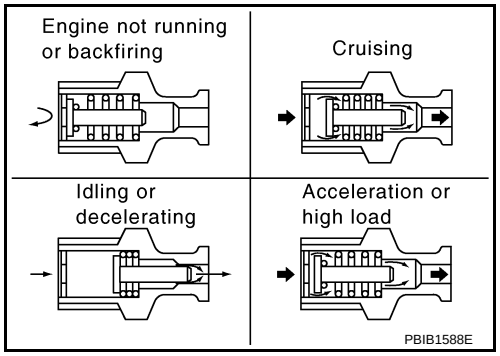

Component Inspection

INFOID:0000000001717182

PCV (POSITIVE CRANKCASE VENTILATION) VALVE

With engine running at idle, remove PCV valve from rocker cover. A properly working valve makes a hissing noise as air passes through it. A strong vacuum should be felt immediately when a finger is placed over valve inlet.

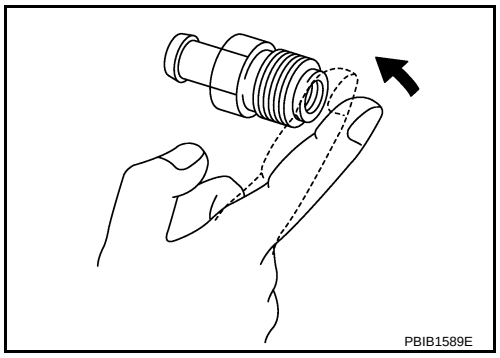

PCV VALVE VENTILATION HOSE

1. Check hoses and hose connections for leaks.
2. Disconnect all hoses and clean with compressed air. If any hose cannot be freed of obstructions, replace.

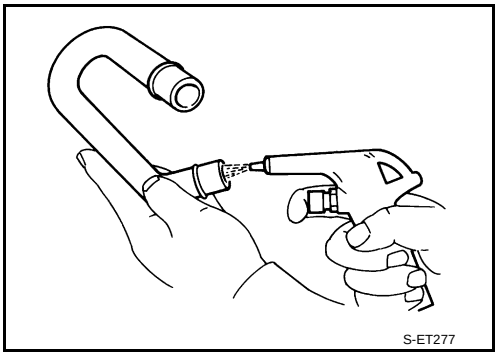

NVIS (NISSAN VEHICLE IMMOBILIZER SYSTEM-NATS)

Description

INFOID:0000000001717183

- **If the security indicator lights up with the ignition switch in the ON position or “NATS MALFUNCTION” is displayed on “SELF-DIAG RESULTS” screen, perform self-diagnostic results mode with CONSULT-III using NATS program card. Refer to BL-180.**
- **Confirm no self-diagnostic results of NVIS (NATS) is displayed before touching “ERASE” in “SELF-DIAG RESULTS” mode with CONSULT-III.**
- **When replacing ECM, initialization of NVIS (NATS) system and registration of all NVIS (NATS) ignition key IDs must be carried out with CONSULT-III using NATS program card.**
  Therefore, be sure to receive all keys from vehicle owner. Regarding the procedures of NVIS (NATS) initialization and all NVIS (NATS) ignition key ID registration, refer to CONSULT-III Operation Manual, IVIS/NVIS.

ON BOARD DIAGNOSTIC (OBD) SYSTEM

Introduction

INFOID:0000000001717184

The ECM has an on board diagnostic system, which detects malfunctions related to engine sensors or actuators. The ECM also records various emission-related diagnostic information including:

Emission-related diagnostic information	SAE Mode
Diagnostic Trouble Code (DTC)	Service $03 of SAE J1979
Freeze Frame data	Service $02 of SAE J1979
System Readiness Test (SRT) code	Service $01 of SAE J1979
1st Trip Diagnostic Trouble Code (1st Trip DTC)	Service $07 of SAE J1979
1st Trip Freeze Frame data	
Test values and Test limits	Service $06 of SAE J1979
Calibration ID	Service $09 of SAE J1979

The above information can be checked using procedures listed in the table below.

×: Applicable —: Not applicable

	DTC	1st trip DTC	Freeze Frame data	1st trip Freeze Frame data	SRT code	SRT status	Test value
CONSULT-III	×	×	×	×	×	×	—
GST	×	×	×	—	×	×	×
ECM	×	×*	—	—	—	×	—

*: When DTC and 1st trip DTC simultaneously appear on the display, they cannot be clearly distinguished from each other.

The malfunction indicator lamp (MIL) on the instrument panel lights up when the same malfunction is detected in two consecutive trips (Two trip detection logic), or when the ECM enters fail-safe mode. (Refer to EC-83, "Fail-Safe Chart".)

Two Trip Detection Logic

INFOID:0000000001717185

When a malfunction is detected for the first time, 1st trip DTC and 1st trip Freeze Frame data are stored in the ECM memory. The MIL will not light up at this stage. <1st trip>
If the same malfunction is detected again during the next drive, the DTC and Freeze Frame data are stored in the ECM memory, and the MIL lights up. The MIL lights up at the same time when the DTC is stored. <2nd trip> The “trip” in the “Two Trip Detection Logic” means a driving mode in which self-diagnosis is performed during vehicle operation. Specific on board diagnostic items will cause the ECM to light up or blink the MIL, and store DTC and Freeze Frame data, even in the 1st trip, as shown below.

×: Applicable —: Not applicable

Items	MIL				DTC		1st trip DTC	
	1st trip		2nd trip		1st trip displaying	2nd trip displaying	1st trip displaying	2nd trip displaying
	Blinking	Lighting up	Blinking	Lighting up				
Misfire (Possible three way catalyst damage) — DTC: P0300 - P0306 is being detected	×	—	—	—	—	—	×	—
Misfire (Possible three way catalyst damage) — DTC: P0300 - P0306 is being detected	—	—	×	—	—	×	—	—
One trip detection diagnoses (Refer to EC-43, "Emission-related Diagnostic Information".)	—	×	—	—	×	—	—	—
Except above	—	—	—	×	—	×	×	—

When there is an open circuit on MIL circuit, the ECM cannot warn the driver by lighting up MIL when there is malfunction on engine control system.

Therefore, when electrical controlled throttle and part of ECM related diagnoses are continuously detected as NG for 5 trips, ECM warns the driver that engine control system malfunctions and MIL circuit is open by means of operating fail-safe function.
The fail-safe function also operates when above diagnoses except MIL circuit are detected, and demands the driver to repair the malfunction.

Engine operating condition in fail-safe mode	Engine speed will not rise more than 2,500 rpm due to the fuel cut

Emission-related Diagnostic Information

INFOID:0000000001717186

EMISSION-RELATED DIAGNOSTIC INFORMATION ITEMS

×: Applicable —: Not applicable

Items (CONSULT-III screen terms)	DTC*1		SRT code	Trip	MIL lighting up	Reference page
	CONSULT-III GST*2	ECM*3				
CAN COMM CIRCUIT	U1000	1000*4	—	1	×	EC-139
CAN COMM CIRCUIT	U1001	1001*4	—	2	—	EC-139
CONTROL UNIT (CAN)	U1010	1010	—	1	×	EC-141
NO DTC IS DETECTED. FURTHER TESTING MAY BE REQUIRED.	**P0000**	**0000**	—	—	**Flashing*5**	—
INT/V TIM CONT-B1	P0011	0011	—	2	×	EC-142
INT/V TIM CONT-B2	P0021	0021	—	2	×	EC-142
A/F SEN1 HTR (B1)	P0031	0031	—	2	×	EC-146
A/F SEN1 HTR (B1)	P0032	0032	—	2	×	EC-146
HO2S2 HTR (B1)	P0037	0037	—	2	×	EC-153
HO2S2 HTR (B1)	P0038	0038	—	2	×	EC-153
A/F SEN1 HTR (B2)	P0051	0051	—	2	×	EC-146
A/F SEN1 HTR (B2)	P0052	0052	—	2	×	EC-146
HO2S2 HTR (B2)	P0057	0057	—	2	×	EC-153
HO2S2 HTR (B2)	P0058	0058	—	2	×	EC-153
INT/V TIM V/CIR-B1	P0075	0075	—	2	×	EC-161
INT/V TIM V/CIR-B2	P0081	0081	—	2	×	EC-161
MAF SEN/CIRCUIT-B1	P0101	0101	—	2	×	EC-168
MAF SEN/CIRCUIT-B1	P0102	0102	—	1	×	EC-177
MAF SEN/CIRCUIT -B1	P0103	0103	—	1	×	EC-177
IAT SEN/CIRCUIT-B1	P0112	0112	—	2	×	EC-184
IAT SEN/CIRCUIT-B1	P0113	0113	—	2	×	EC-184
ECT SEN/CIRC	P0117	0117	—	1	×	EC-188
ECT SEN/CIRC	P0118	0118	—	1	×	EC-188
TP SEN 2/CIRC-B1	P0122	0122	—	1	×	EC-193
TP SEN 2/CIRC-B1	P0123	0123	—	1	×	EC-193
ECT SENSOR	P0125	0125	—	2	×	EC-199
IAT SENSOR-B1	P0127	0127	—	2	×	EC-202
THERMSTAT FNCTN	P0128	0128	—	2	×	EC-205
A/F SENSOR1 (B1)	P0130	0130	—	2	×	EC-207
A/F SENSOR1 (B1)	P0131	0131	—	2	×	EC-216
A/F SENSOR1 (B1)	P0132	0132	—	2	×	EC-224
A/F SENSOR1 (B1)	P0133	0133	×	2	×	EC-232

Items (CONSULT-III screen terms)	DTC*1		SRT code	Trip	MIL lighting up	Reference page
	CONSULT-III GST*2	ECM*3				
HO2S2 (B1)	P0137	0137	×	2	×	EC-241
HO2S2 (B1)	P0138	0138	×	2	×	EC-250
HO2S2 (B1)	P0139	0139	×	2	×	EC-262
A/F SENSOR1 (B2)	P0150	0150	—	2	×	EC-207
A/F SENSOR1 (B2)	P0151	0151	—	2	×	EC-216
A/F SENSOR1 (B2)	P0152	0152	—	2	×	EC-224
A/F SENSOR1 (B2)	P0153	0153	×	2	×	EC-232
HO2S2 (B2)	P0157	0157	×	2	×	EC-241
HO2S2 (B2)	P0158	0158	×	2	×	EC-250
HO2S2 (B2)	P0159	0159	×	2	×	EC-262
FUEL SYS-LEAN-B1	P0171	0171	—	2	×	EC-271
FUEL SYS-RICH-B1	P0172	0172	—	2	×	EC-281
FUEL SYS-LEAN-B2	P0174	0174	—	2	×	EC-271
FUEL SYS-RICH-B2	P0175	0175	—	2	×	EC-281
FTT SENSOR	P0181	0181	—	2	×	EC-291
FTT SEN/CIRCUIT	P0182	0182	—	2	×	EC-296
FTT SEN/CIRCUIT	P0183	0183	—	2	×	EC-296
TP SEN 1/CIRC-B1	P0222	0222	—	1	×	EC-301
TP SEN 1/CIRC-B1	P0223	0223	—	1	×	EC-301
MULTI CYL MISFIRE	P0300	0300	—	2	×	EC-307
CYL 1 MISFIRE	P0301	0301	—	2	×	EC-307
CYL 2 MISFIRE	P0302	0302	—	2	×	EC-307
CYL 3 MISFIRE	P0303	0303	—	2	×	EC-307
CYL 4 MISFIRE	P0304	0304	—	2	×	EC-307
CYL 5 MISFIRE	P0305	0305	—	2	×	EC-307
CYL 6 MISFIRE	P0306	0306	—	2	×	EC-307
KNOCK SEN/CIRC-B1	P0327	0327	—	2	—	EC-314
KNOCK SEN/CIRC-B1	P0328	0328	—	2	—	EC-314
CKP SEN/CIRCUIT	P0335	0335	—	2	×	EC-319
CMP SEN/CIRC-B1	P0340	0340	—	2	×	EC-325
CMP SEN/CIRC-B2	P0345	0345	—	2	×	EC-325
EGR SYSTEM	P0400	0400	×	2	×	EC-333
EGR VOL CON/V CIR	P0403	0403	—	1	×	EC-341
EGR TEMP SEN/ CIRC	P0405	0405	—	2	×	EC-347
EGR TEMP SEN/ CIRC	P0406	0406	—	2	×	EC-347
TW CATALYST SYS-B1	P0420	0420	×	2	×	EC-354
TW CATALYST SYS-B2	P0430	0430	×	2	×	EC-354
EVAP PURG FLOW/MON	P0441	0441	×	2	×	EC-359
EVAP SMALL LEAK	P0442	0442	×	2	×	EC-364
PURG VOLUME CONT/V	P0443	0443	—	2	×	EC-371
PURG VOLUME CONT/V	P0444	0444	—	2	×	EC-379
PURG VOLUME CONT/V	P0445	0445	—	2	×	EC-379

Items (CONSULT-III screen terms)	DTC*1		SRT code	Trip	MIL lighting up	Reference page
	CONSULT-III GST*2	ECM*3				
VENT CONTROL VALVE	P0447	0447	—	2	×	EC-385
VENT CONTROL VALVE	P0448	0448	—	2	×	EC-390
EVAP SYS PRES SEN	P0451	0451	—	2	×	EC-396
EVAP SYS PRES SEN	P0452	0452	—	2	×	EC-399
EVAP SYS PRES SEN	P0453	0453	—	2	×	EC-405
EVAP GROSS LEAK	P0455	0455	—	2	×	EC-412
EVAP VERY SML LEAK	P0456	0456	×*6	2	×	EC-418
FUEL LEV SEN SLOSH	P0460	0460	—	2	×	EC-426
FUEL LEVEL SENSOR	P0461	0461	—	2	×	EC-428
FUEL LEVL SEN/CIRC	P0462	0462	—	2	×	EC-430
FUEL LEVL SEN/CIRC	P0463	0463	—	2	×	EC-430
VEH SPEED SEN/CIRC*5	P0500	0500	—	2	×	EC-432
ISC SYSTEM	P0506	0506	—	2	×	EC-434
ISC SYSTEM	P0507	0507	—	2	×	EC-436
PW ST P SEN/CIRC	P0550	0550	—	2	—	EC-438
ECM BACK UP/CIRCUIT	P0603	0603	—	2	×	EC-443
ECM	P0605	0605	—	1 or 2	× or —	EC-447
SENSOR POWER/CIRC	P0643	0643	—	1	×	EC-449
PNP SW/CIRC	P0705	0705	—	1	×	AT-83
ATF TEMP SEN/CIRC	P0710	0710	—	2	×	AT-88
FLUID TEMP SEN	P0711	0711	—	2	×	AT-93
TURBINE SENSOR	P0717	0717	—	1	×	AT-98
VHCL SPEED SEN·AT	P0722	0722	—	1	×	AT-102
A/T 1ST GR FNCTN	P0731	0731	—	1	×	AT-108
A/T 2ND GR FNCTN	P0732	0732	—	1	×	AT-111
A/T 3RD GR FNCTN	P0733	0733	—	1	×	AT-116
A/T 4TH GR FNCTN	P0734	0734	—	1	×	AT-120
A/T 5TH GR FNCTN	P0735	0735	—	1	×	AT-123
A/T TCC S/V FNCTN	P0744	0744	—	1	×	AT-127
PC SOL A(L/PRESS)	P0745	0745	—	1	×	AT-130
SHIFT SOL A	P0750	0750	—	1	×	AT-135
SHIFT SOL B	P0755	0755	—	1	×	AT-140
SHIFT SOL C	P0760	0760	—	1	×	AT-145
SFT SOL C STUCK ON	P0762	0762	—	1	×	AT-150
SHIFT SOL D	P0765	0765	—	1	×	AT-155
SHIFT SOL E	P0770	0770	—	1	×	AT-160
PC SOL B(SFT/PRS)	P0775	0775	—	1	×	AT-165
SHIFT	P0780	0780	—	1	×	AT-170
PC SOL C(TCC&SFT)	P0795	0795	—	1	×	AT-174
PC SOL C STC ON	P0797	0797	—	1	×	AT-179
P-N POS SW/CIRCUIT	P0850	0850	—	2	×	EC-454
TCM POWER INPT SIG	P0882	0882	—	1	×	AT-188

Items (CONSULT-III screen terms)	DTC*1		SRT code	Trip	MIL lighting up	Reference page
	CONSULT-III GST*2	ECM*3				
CLOSED LOOP-B1	P1148	1148	—	1	×	EC-460
CLOSED LOOP-B2	P1168	1168	—	1	×	EC-460
TCS C/U FUNCTN	P1211	1211	—	2	—	EC-461
TCS/CIRC	P1212	1212	—	2	—	EC-462
ENG OVER TEMP	P1217	1217	—	1	×	EC-463
CTP LEARNING-B1	P1225	1225	—	2	—	EC-473
CTP LEARNING-B1	P1226	1226	—	2	—	EC-475
EGR SYSTEM	P1402	1402	×	2	×	EC-477
COLD START CONTROL	P1421	1421	—	2	×	EC-484
ASCD SW	P1564	1564	—	1	—	EC-486
ASCD BRAKE SW	P1572	1572	—	1	—	EC-492
ASCD VHL SPD SEN	P1574	1574	—	1	—	EC-499
LOCK MODE	P1610	1610	—	2	—	BL-180
ID DISCARD IMM-ECM	P1611	1611	—	2	—	BL-180
CHAIN OF ECM-IMMU	P1612	1612	—	2	—	BL-180
CHAIN OF IMMU-KEY	P1614	1614	—	2	—	BL-180
DIFFERENCE OF KEY	P1615	1615	—	2	—	BL-180
VIAS S/V-1	P1800	1800	—	2	—	EC-501
BRAKE SW/CIRCUIT	P1805	1805	—	2	—	EC-506
ETC MOT PWR-B1	P2100	2100	—	1	×	EC-510
ETC FNCTN/CIRC-B1	P2101	2101	—	1	×	EC-514
ETC MOT PWR	P2103	2103	—	1	×	EC-510
ETC MOT-B1	P2118	2118	—	1	×	EC-521
ETC ACTR-B1	P2119	2119	—	1	×	EC-526
APP SEN 1/CIRC	P2122	2122	—	1	×	EC-528
APP SEN 1/CIRC	P2123	2123	—	1	×	EC-528
APP SEN 2/CIRC	P2127	2127	—	1	×	EC-534
APP SEN 2/CIRC	P2128	2128	—	1	×	EC-534
TP SENSOR-B1	P2135	2135	—	1	×	EC-540
APP SENSOR	P2138	2138	—	1	×	EC-546
A/F SENSOR1 (B1)	P2A00	2A00	—	2	×	EC-554
A/F SENSOR1 (B2)	P2A03	2A03	—	2	×	EC-554

*1: 1st trip DTC No. is the same as DTC No.

*2: This number is prescribed by SAE J2012.

*3: In Diagnostic Test Mode II (Self-diagnostic results), this number is controlled by NISSAN.

*4: The troubleshooting for this DTC needs CONSULT-III.

*5: When the ECM is in the mode of displaying SRT status, MIL may flash. For the details, refer to “How to Display SRT Status”.

*6: SRT code will not be set if the self-diagnostic result is NG.

DTC AND 1ST TRIP DTC

The 1st trip DTC (whose number is the same as the DTC number) is displayed for the latest self-diagnostic result obtained. If the ECM memory was cleared previously, and the 1st trip DTC did not reoccur, the 1st trip DTC will not be displayed.

If a malfunction is detected during the 1st trip, the 1st trip DTC is stored in the ECM memory. The MIL will not light up (two trip detection logic). If the same malfunction is not detected in the 2nd trip (meeting the required

driving pattern), the 1st trip DTC is cleared from the ECM memory. If the same malfunction is detected in the 2nd trip, both the 1st trip DTC and DTC are stored in the ECM memory and the MIL lights up. In other words, the DTC is stored in the ECM memory and the MIL lights up when the same malfunction occurs in two consecutive trips. If a 1st trip DTC is stored and a non-diagnostic operation is performed between the 1st and 2nd trips, only the 1st trip DTC will continue to be stored. For malfunctions that blink or light up the MIL during the 1st trip, the DTC and 1st trip DTC are stored in the ECM memory.
Procedures for clearing the DTC and the 1st trip DTC from the ECM memory are described in “HOW TO ERASE EMISSION-RELATED DIAGNOSTIC INFORMATION”.
For malfunctions in which 1st trip DTCs are displayed, refer to “EMISSION-RELATED DIAGNOSTIC INFORMATION ITEMS”. These items are required by legal regulations to continuously monitor the system/component. In addition, the items monitored non-continuously are also displayed on CONSULT-III.
1st trip DTC is specified in Service $07 of SAE J1979. 1st trip DTC detection occurs without lighting up the MIL and therefore does not warn the driver of a malfunction. However, 1st trip DTC detection will not prevent the vehicle from being tested, for example during Inspection/Maintenance (I/M) tests.
When a 1st trip DTC is detected, check, print out or write down and erase (1st trip) DTC and Freeze Frame data as specified in Work Flow procedure Step 2, refer to EC-78, "Trouble Diagnosis Introduction". Then perform DTC Confirmation Procedure or Overall Function Check to try to duplicate the malfunction. If the malfunction is duplicated, the item requires repair.

How to Read DTC and 1st Trip DTC

DTC and 1st trip DTC can be read by the following methods.

With CONSULT-III

With GST

CONSULT-III or GST (Generic Scan Tool) Examples: P0340, P0850, P1148, etc.
These DTCs are prescribed by SAE J2012.
(CONSULT-III also displays the malfunctioning component or system.)

No Tools

The number of blinks of the MIL in the Diagnostic Test Mode II (Self-Diagnostic Results) indicates the DTC. Example: 0340, 0850, 1148, etc.
These DTCs are controlled by NISSAN.

- **1st trip DTC No. is the same as DTC No.**
- **Output of a DTC indicates a malfunction. However, GST or the Diagnostic Test Mode II do not indicate whether the malfunction is still occurring or has occurred in the past and has returned to normal. CONSULT-III can identify malfunction status as shown below. Therefore, using CONSULT-III (if available) is recommended.**

A sample of CONSULT-III display for DTC and 1st trip DTC is shown below. DTC or 1st trip DTC of a malfunction is displayed in “SELF-DIAGNOSTIC RESULTS” mode of CONSULT-III. Time data indicates how many times the vehicle was driven after the last detection of a DTC.
If the DTC is being detected currently, the time data will be [0].
If a 1st trip DTC is stored in the ECM, the time data will be [1t].

FREEZE FRAME DATA AND 1ST TRIP FREEZE FRAME DATA

The ECM records the driving conditions such as fuel system status, calculated load value, engine coolant temperature, short term fuel trim, long term fuel trim, engine speed, vehicle speed, absolute throttle position, base fuel schedule and intake air temperature at the moment a malfunction is detected.
Data which are stored in the ECM memory, along with the 1st trip DTC, are called 1st trip freeze frame data. The data, stored together with the DTC data, are called freeze frame data and displayed on CONSULT-III or GST. The 1st trip freeze frame data can only be displayed on the CONSULT-III screen, not on the GST. For details, see EC-107, "CONSULT-III Function (ENGINE)".
Only one set of freeze frame data (either 1st trip freeze frame data or freeze frame data) can be stored in the ECM. 1st trip freeze frame data is stored in the ECM memory along with the 1st trip DTC. There is no priority for 1st trip freeze frame data and it is updated each time a different 1st trip DTC is detected. However, once freeze frame data (2nd trip detection/MIL on) is stored in the ECM memory, 1st trip freeze frame data is no longer stored. Remember, only one set of freeze frame data can be stored in the ECM. The ECM has the following priorities to update the data.

Priority	Items	
1	Freeze frame data	Misfire — DTC: P0300 - P0306 Fuel Injection System Function — DTC: P0171, P0172, P0174, P0175
2		Except the above items (Includes A/T related items)
3	1st trip freeze frame data	

For example, the EGR malfunction (Priority: 2) was detected and the freeze frame data was stored in the 2nd trip. After that when the misfire (Priority: 1) is detected in another trip, the freeze frame data will be updated from the EGR malfunction to the misfire. The 1st trip freeze frame data is updated each time a different malfunction is detected. There is no priority for 1st trip freeze frame data. However, once freeze frame data is stored in the ECM memory, 1st trip freeze data is no longer stored (because only one freeze frame data or 1st trip freeze frame data can be stored in the ECM). If freeze frame data is stored in the ECM memory and freeze frame data with the same priority occurs later, the first (original) freeze frame data remains unchanged in the ECM memory.
Both 1st trip freeze frame data and freeze frame data (along with the DTCs) are cleared when the ECM memory is erased. Procedures for clearing the ECM memory are described in “HOW TO ERASE EMISSION-RELATED DIAGNOSTIC INFORMATION”.

SYSTEM READINESS TEST (SRT) CODE

System Readiness Test (SRT) code is specified in Service $01 of SAE J1979.
As part of an enhanced emissions test for Inspection & Maintenance (I/M), certain states require the status of SRT be used to indicate whether the ECM has completed self-diagnosis of major emission systems and components. Completion must be verified in order for the emissions inspection to proceed.
If a vehicle is rejected for a State emissions inspection due to one or more SRT items indicating “INCMP”, use the information in this Service Manual to set the SRT to “CMPLT”.
In most cases the ECM will automatically complete its self-diagnosis cycle during normal usage, and the SRT status will indicate “CMPLT” for each application system. Once set as “CMPLT”, the SRT status remains “CMPLT” until the self-diagnosis memory is erased.
Occasionally, certain portions of the self-diagnostic test may not be completed as a result of the customer's normal driving pattern; the SRT will indicate “INCMP” for these items.
NOTE:
The SRT will also indicate “INCMP” if the self-diagnosis memory is erased for any reason or if the ECM memory power supply is interrupted for several hours.
If, during the state emissions inspection, the SRT indicates “CMPLT” for all test items, the inspector will continue with the emissions test. However, if the SRT indicates “INCMP” for one or more of the SRT items the vehicle is returned to the customer untested.
NOTE:
If MIL is ON during the state emissions inspection, the vehicle is also returned to the customer untested even though the SRT indicates “CMPLT” for all test items. Therefore, it is important to check SRT (“CMPLT”) and DTC (No DTCs) before the inspection.

SRT Item

The table below shows required self-diagnostic items to set the SRT to “CMPLT”.

SRT item (CONSULT-III indication)	Performance Priority*	Required self-diagnostic items to set the SRT to “CMPLT”	Corresponding DTC No.
CATALYST	3	Three way catalyst function	P0420, P0430
EVAP SYSTEM	3	EVAP control system purge flow monitoring	P0441
	2	EVAP control system	P0442
	3	EVAP control system	P0456
HO2S	3	A/F sensor 1	P0133, P0153
		Heated oxygen sensor 2	P0137, P0157
		Heated oxygen sensor 2	P0138, P0158
		Heated oxygen sensor 2	P0139, P0159
EGR SYSTEM	3	EGR function	P0400
	1	EGR function	P1402

*: If completion of several SRTs is required, perform driving patterns (DTC confirmation procedure), one by one based on the priority for models with CONSULT-III.

SRT Set Timing

SRT is set as “CMPLT” after self-diagnosis has been performed one or more times. Completion of SRT is done regardless of whether the result is OK or NG. The set timing is different between OK and NG results and is shown in the table below.

Self-diagnosis result		Example				
		Diagnosis	Ignition cycle ← ON → OFF	← ON → OFF	← ON → OFF	← ON →
All OK	Case 1	P0400	OK (1)	— (1)	OK (2)	— (2)
		P0402	OK (1)	— (1)	— (1)	OK (2)
		P1402	OK (1)	OK (2)	— (2)	— (2)
		SRT of EGR	“CMPLT”	“CMPLT”	“CMPLT”	“CMPLT”
	Case 2	P0400	OK (1)	— (1)	— (1)	— (1)
		P0402	— (0)	— (0)	OK (1)	— (1)
		P1402	OK (1)	OK (2)	— (2)	— (2)
		SRT of EGR	“INCMP”	“INCMP”	“CMPLT”	“CMPLT”
NG exists	Case 3	P0400	OK	OK	—	—
		P0402	—	—	—	—
		P1402	NG	—	NG	NG (Consecutive NG)
		(1st trip) DTC	1st trip DTC	—	1st trip DTC	DTC (= MIL “ON”)
		SRT of EGR	“INCMP”	“INCMP”	“INCMP”	“CMPLT”

OK: Self-diagnosis is carried out and the result is OK.

NG: Self-diagnosis is carried out and the result is NG.

—: Self-diagnosis is not carried out.

When all SRT related self-diagnoses showed OK results in a single cycle (Ignition OFF-ON-OFF), the SRT will indicate “CMPLT”. → Case 1 above

When all SRT related self-diagnoses showed OK results through several different cycles, the SRT will indicate “CMPLT” at the time the respective self-diagnoses have at least one OK result. → Case 2 above

If one or more SRT related self-diagnoses showed NG results in 2 consecutive cycles, the SRT will also indicate “CMPLT”. → Case 3 above

The table above shows that the minimum number of cycles for setting SRT as “INCMP” is one (1) for each self-diagnosis (Case 1 & 2) or two (2) for one of self-diagnoses (Case 3). However, in preparation for the state emissions inspection, it is unnecessary for each self-diagnosis to be executed twice (Case 3) for the following reasons:

- The SRT will indicate “CMPLT” at the time the respective self-diagnoses have one (1) OK result.
- The emissions inspection requires “CMPLT” of the SRT only with OK self-diagnosis results.
- When, during SRT driving pattern, 1st trip DTC (NG) is detected prior to “CMPLT” of SRT, the self-diagnosis memory must be erased from ECM after repair.
- If the 1st trip DTC is erased, all the SRT will indicate “INCMP”.

  NOTE:

  SRT can be set as “CMPLT” together with the DTC(s). Therefore, DTC check must always be carried out prior to the state emission inspection even though the SRT indicates “CMPLT”.

SRT Service Procedure

If a vehicle has failed the state emissions inspection due to one or more SRT items indicating “INCMP”, review the flowchart diagnostic sequence on the next page.

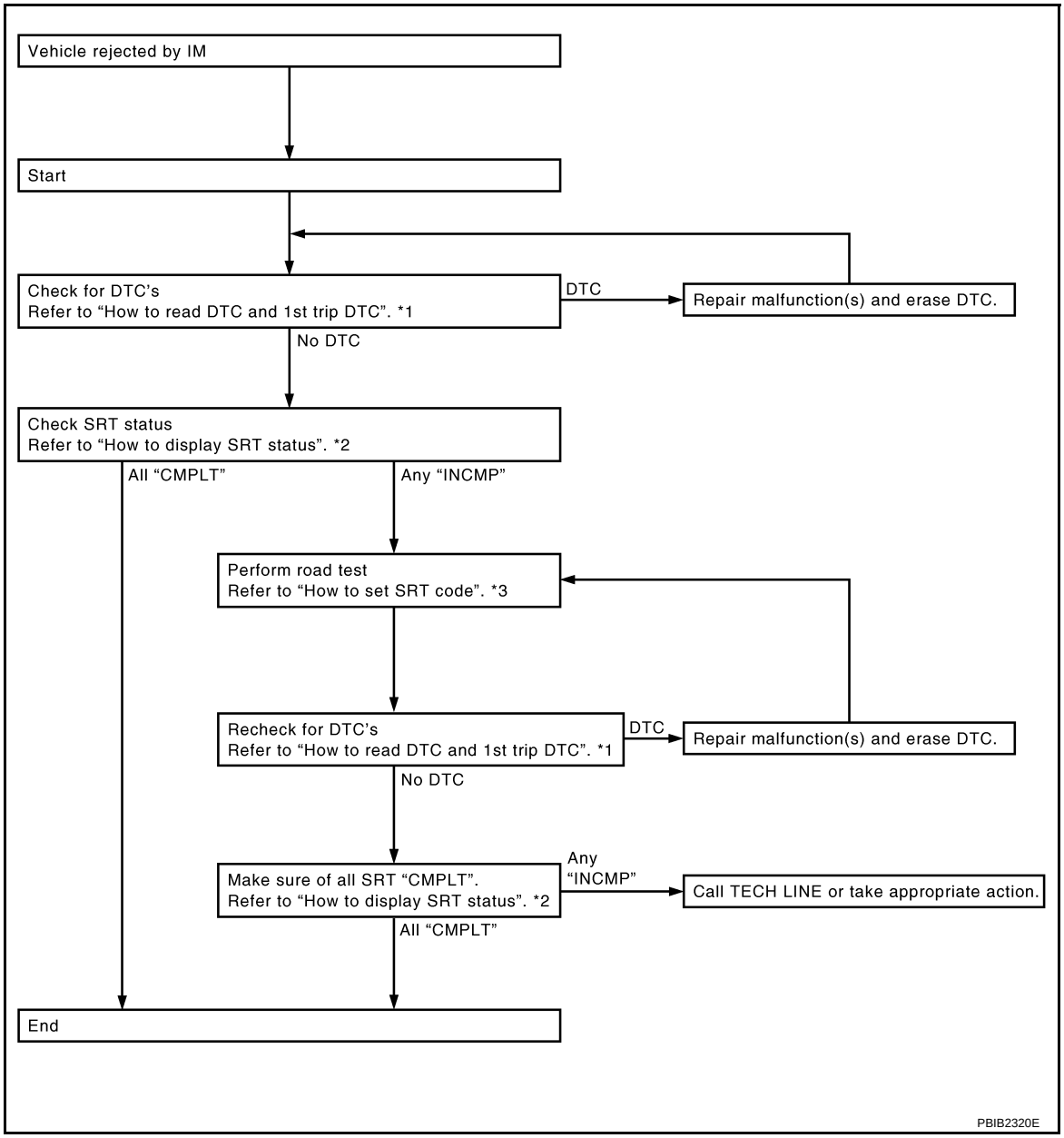

*1 "How to Read DTC and 1st Trip DTC" *2 "How to Display SRT Status" *3 "How to Set SRT Code"

How to Display SRT Status

WITH CONSULT-III

Selecting "SRT STATUS" in "DTC&SRT CONFIRMATION" mode with CONSULT-III.

For items whose SRT codes are set, a "CMPLT" is displayed on the CONSULT-III screen; for items whose SRT codes are not set, "INCMP" is displayed.

A sample of CONSULT-III display for SRT code is shown in the figure.

"INCMP" means the self-diagnosis is incomplete and SRT is not set. "CMPLT" means the self-diagnosis is complete and SRT is set.

NOTE:

Though displayed on the CONSULT-III screen, "HO2S HTR" is not SRT item.

WITH GST

Selecting Service $01 with GST (Generic Scan Tool)

NO TOOLS

A SRT code itself can be displayed while only SRT status can be.

1. Turn ignition switch ON and wait 20 seconds.
2. SRT status is indicated as shown below.

- When all SRT codes are set, MIL lights up continuously.
- When any SRT codes are not set, MIL will flash periodically for 10 seconds.

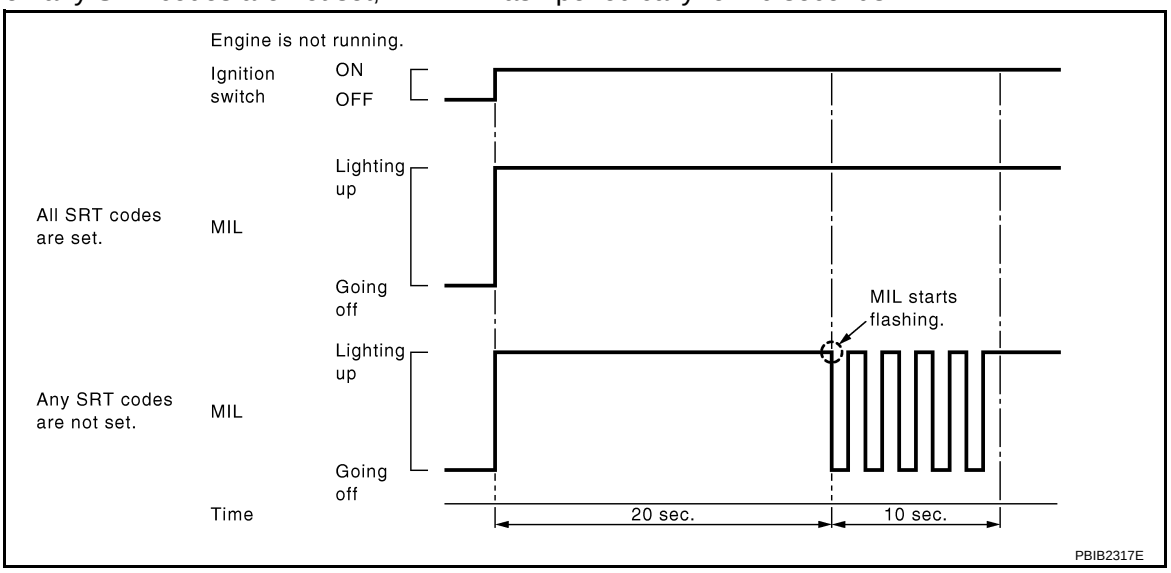

How to Set SRT Code

To set all SRT codes, self-diagnosis for the items indicated above must be performed one or more times. Each diagnosis may require a long period of actual driving under various conditions.

WITH CONSULT-III

Perform corresponding DTC Confirmation Procedure one by one based on Performance Priority in the table on “SRT Item”.

WITHOUT CONSULT-III

The most efficient driving pattern in which SRT codes can be properly set is explained on the next page. The driving pattern should be performed one or more times to set all SRT codes.

Driving Pattern

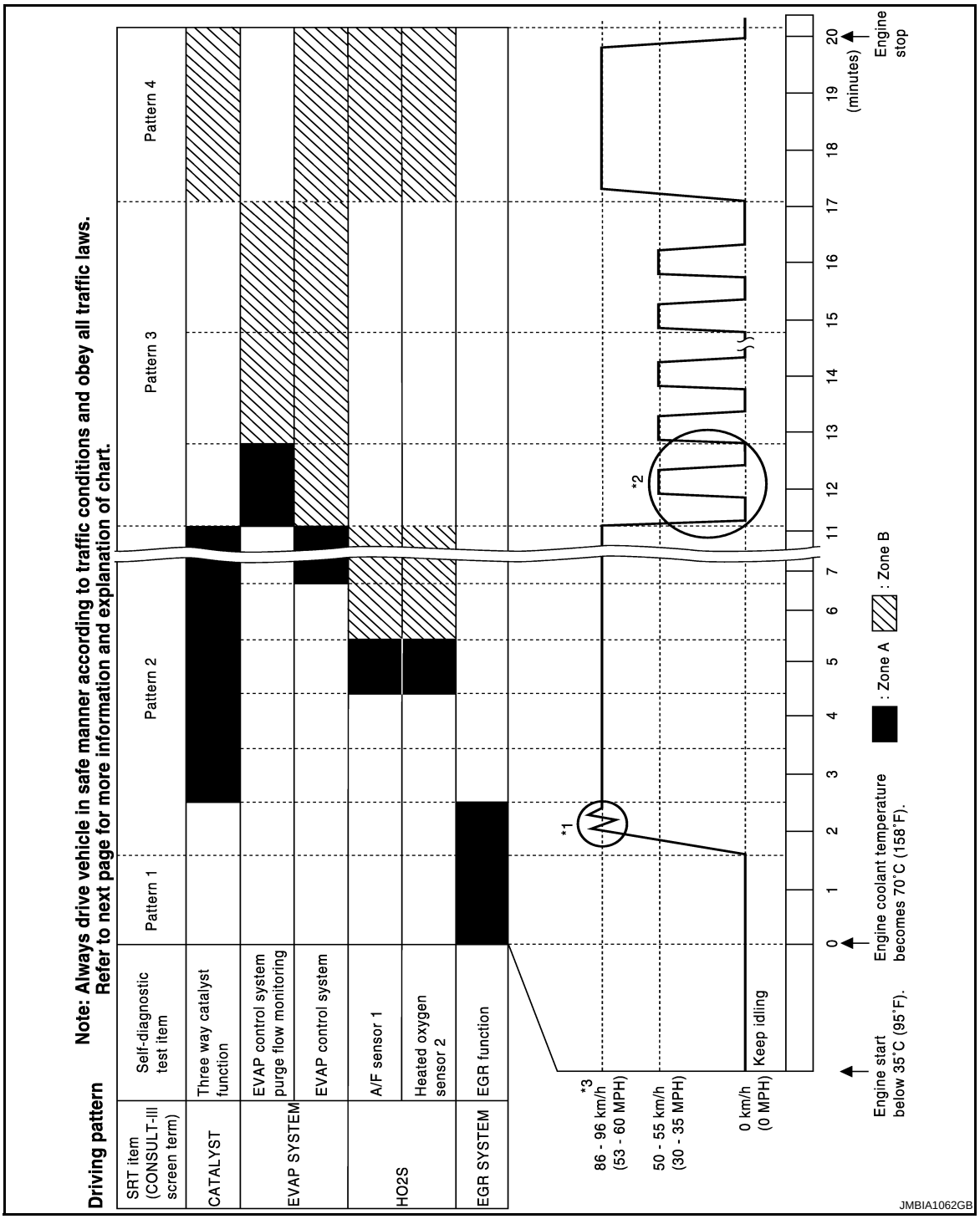

- The time required for each diagnosis varies with road surface conditions, weather, altitude, individual driving habits, etc.
  Zone A refers to the range where the time, required for the diagnosis under normal conditions*, is the shortest.
  Zone B refers to the range where the diagnosis can still be performed if the diagnosis is not completed within zone A.

*: Normal conditions refer to the following:

- Sea level
- Flat road
- Ambient air temperature: 20 - 30°C (68 - 86°F)
- Diagnosis is performed as quickly as possible under normal conditions.

Under different conditions [For example: ambient air temperature other than 20 - 30°C (68 - 86°F)], diagnosis may also be performed.

Pattern 1:

- **The engine is started at the engine coolant temperature of –10 to 35°C (14 to 95°F) (where the voltage between the ECM terminal 73 and ground is 3.0 - 4.3V).**
- **The engine must be operated at idle speed until the engine coolant temperature is greater than 70°C (158°F) (where the voltage between the ECM terminal 73 and ground is lower than 1.4V).**
- **The engine is started at the fuel tank temperature of warmer than 0°C (32°F) (where the voltage between the ECM terminal 107 and ground is less than 4.1V).**

Pattern 2:

- When steady-state driving is performed again even after it is interrupted, each diagnosis can be conducted. In this case, the time required for diagnosis may be extended.

Pattern 3:

- The driving pattern outlined in *2 must be repeated at least 3 times.

Pattern 4:

- Tests are performed after the engine has been operated for at least 17 minutes.
- The accelerator pedal must be held very steady during steady-state driving.
- If the accelerator pedal is moved, the test must be conducted all over again.

*1: Depress the accelerator pedal until vehicle speed is 90 km/h (56 MPH), then release the accelerator pedal and keep it released for more than 10 seconds. Depress the accelerator pedal until vehicle speed is 90 km/h (56 MPH) again.

*2: Operate the vehicle in the following driving pattern.

1. Decelerate vehicle to 0 km/h (0 MPH) and let engine idle.
2. Repeat driving pattern shown at right at least 10 times.

- **During acceleration, hold the accelerator pedal as steady as possible.**

*3: Checking the vehicle speed with GST is advised.

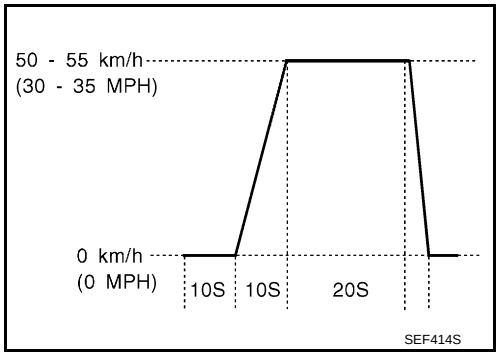

Suggested Transmission Gear Position

Set the shift lever in the D position with the overdrive switch turned ON.

TEST VALUE AND TEST LIMIT (GST ONLY — NOT APPLICABLE TO CONSULT-III)

The following is the information specified in Service $06 of SAE J1979.

The test value is a parameter used to determine whether a system/circuit diagnostic test is OK or NG while being monitored by the ECM during self-diagnosis. The test limit is a reference value which is specified as the maximum or minimum value and is compared with the test value being monitored.

These data (test value and test limit) are specified by On Board Monitor ID(OBDMID), Test ID (TID), Unit and Scaling ID and can be displayed on the GST screen.

The items of the test value and test limit will be displayed with GST screen which items are provided by the ECM. (eg., if the bank 2 is not applied on this vehicle, only the items of the bank 1 is displayed)

Item	OBD-MID	Self-diagnostic test item	DTC	Test value and Test limit (GST display)		Description
				TID	Unit and Scaling ID	
HO2S	01H	Air fuel ratio (A/F) sensor 1 (Bank 1)	P0131	83H	0BH	Minimum sensor output voltage for test cycle
			P0131	84H	0BH	Maximum sensor output voltage for test cycle
			P0130	85H	0BH	Minimum sensor output voltage for test cycle
			P0130	86H	0BH	Maximum sensor output voltage for test cycle
			P0133	87H	04H	Response rate: Response ratio (Lean to Rich)
			P0133	88H	04H	Response rate: Response ratio (Rich to Lean)
			P2A00	89H	84H	The amount of shift in air fuel ratio
			P2A00	8AH	84H	The amount of shift in air fuel ratio
			P0130	8BH	0BH	Difference in sensor output voltage
			P0133	8CH	83H	Response gain at the limited frequency
	02H	Heated oxygen sensor 2 (Bank 1)	P0138	07H	0CH	Minimum sensor output voltage for test cycle
			P0137	08H	0CH	Maximum sensor output voltage for test cycle
			P0138	80H	0CH	Sensor output voltage
			P0139	81H	0CH	Difference in sensor output voltage
	03H	Heated oxygen sensor 3 (Bank 1)	P0143	07H	0CH	Minimum sensor output voltage for test cycle
			P0144	08H	0CH	Maximum sensor output voltage for test cycle
			P0146	80H	0CH	Sensor output voltage
			P0145	81H	0CH	Difference in sensor output voltage

Item	OBD-MID	Self-diagnostic test item	DTC	Test value and Test limit (GST display)		Description
				TID	Unit and Scaling ID	
HO2S	05H	Air fuel ratio (A/F) sensor 1 (Bank 2)	P0151	83H	0BH	Minimum sensor output voltage for test cycle
			P0151	84H	0BH	Maximum sensor output voltage for test cycle
			P0150	85H	0BH	Minimum sensor output voltage for test cycle
			P0150	86H	0BH	Maximum sensor output voltage for test cycle
			P0153	87H	04H	Response rate: Response ratio (Lean to Rich)
			P0153	88H	04H	Response rate: Response ratio (Rich to Lean)
			P2A03	89H	84H	The amount of shift in air fuel ratio
			P2A03	8AH	84H	The amount of shift in air fuel ratio
			P0150	8BH	0BH	Difference in sensor output voltage
			P0153	8CH	83H	Response gain at the limited frequency
	06H	Heated oxygen sensor 2 (Bank 2)	P0158	07H	0CH	Minimum sensor output voltage for test cycle
			P0157	08H	0CH	Maximum sensor output voltage for test cycle
			P0158	80H	0CH	Sensor output voltage
			P0159	81H	0CH	Difference in sensor output voltage
	07H	Heated oxygen sensor 3 (Bank2)	P0163	07H	0CH	Minimum sensor output voltage for test cycle
			P0164	08H	0CH	Maximum sensor output voltage for test cycle
			P0166	80H	0CH	Sensor output voltage
			P0165	81H	0CH	Difference in sensor output voltage
CATA-LYST	21H	Three way catalyst function (Bank1)	P0420	80H	01H	O2 storage index
			P0420	82H	01H	Switching time lag engine exhaust index value
			P2423	83H	0CH	Difference in 3rd O2 sensor output voltage
			P2423	84H	84H	O2 storage index in HC trap catalyst
	22H	Three way catalyst function (Bank2)	P0430	80H	01H	O2 storage index
			P0430	82H	01H	Switching time lag engine exhaust index value
			P2424	83H	0CH	Difference in 3rd O2 sensor output voltage
			P2424	84H	84H	O2 storage index in HC trap catalyst

Item	OBD-MID	Self-diagnostic test item	DTC	Test value and Test limit (GST display)		Description
				TID	Unit and Scaling ID	
EGR SYSTEM	31H	EGR function	P0400	80H	96H	Low Flow Faults: EGR temp change rate (short term)
			P0400	81H	96H	Low Flow Faults: EGR temp change rate (long term)
			P0400	82H	96H	Low Flow Faults: Difference between max EGR temp and EGR temp under idling condition
			P0400	83H	96H	Low Flow Faults: Max EGR temp
			P1402	84H	96H	High Flow Faults: EGR temp increase rate
EVAP SYSTEM	39H	EVAP control system leak (Cap Off)	P0455	80H	0CH	Difference in pressure sensor output voltage before and after pull down
	3BH	EVAP control system leak (Small leak)	P0442	80H	05H	Leak area index (for more than 0.04inch)
	3CH	EVAP control system (Very small leak)	P0456	80H	05H	Leak area index (for more than 0.02inch)
			P0456	81H	FDH	Maximum internal pressure of EVAP system during monitoring
	3DH	Purge flow system	P0441	83H	0CH	Difference in pressure sensor output voltage before and after vent control value close
O2 SENSOR HEATER	41H	A/F sensor 1 heater (Bank 1)	Low Input:P0031 High Input:P0032	81H	0BH	Converted value of Heater electric current to voltage
	42H	Heated oxygen sensor 2 (Bank 1)	Low Input:P0037 High Input:P0038	80H	0CH	Converted value of Heater electric current to voltage
	43H	Heated oxygen sensor 3 (Bank 1)	P0043	80H	0CH	Converted value of Heater electric current to voltage
	45H	A/F sensor 1 heater (Bank 2)	Low Input:P0051 High Input:P0052	81H	0BH	Converted value of Heater electric current to voltage
	46H	Heated oxygen sensor 2 (Bank 2)	Low Input:P0057 High Input:P0058	80H	0CH	Converted value of Heater electric current to voltage
	47H	Heated oxygen sensor 3 (Bank 2)	P0063	80H	0CH	Converted value of Heater electric current to voltage
SECONDARY AIR	71H	Secondary Air system	P0411	80H	01H	Secondary Air Injection System Incorrect Flow Detected
			Bank1: P0491 Bank2: P0492	81H	01H	Secondary Air Injection System Insufficient Flow
			P2445	82H	01H	Secondary Air Injection System Pump Stuck Off
			P2448	83H	01H	Secondary Air Injection System High Airflow
			Bank1: P2440 Bank2: P2442	84H	01H	Secondary Air Injection System Switching Valve Stuck Open
			P2440	85H	01H	Secondary Air Injection System Switching Valve Stuck Open
			P2444	86H	01H	Secondary Air Injection System Pump Stuck On

Item	OBD-MID	Self-diagnostic test item	DTC	Test value and Test limit (GST display)		Description
				TID	Unit and Scaling ID	
FUEL SYSTEM	81H	Fuel injection system function (Bank 1)	P0171 or P0172	80H	2FH	Long term fuel trim
			P0171 or P0172	81H	24H	The number of lambda control clamped
	82H	Fuel injection system function (Bank 2)	P0174 or P0175	80H	2FH	Long term fuel trim
			P0174 or P0175	81H	24H	The number of lambda control clamped
MISFIRE	A1H	Multiple Cylinder Misfire	P0301	80H	24H	Misfiring counter at 1000rev of the first cylinder
			P0302	81H	24H	Misfiring counter at 1000rev of the second cylinder
			P0303	82H	24H	Misfiring counter at 1000rev of the third cylinder
			P0304	83H	24H	Misfiring counter at 1000rev of the fourth cylinder
			P0305	84H	24H	Misfiring counter at 1000rev of the fifth cylinder
			P0306	85H	24H	Misfiring counter at 1000rev of the sixth cylinder
			P0307	86H	24H	Misfiring counter at 1000rev of the seventh cylinder
			P0308	87H	24H	Misfiring counter at 1000rev of the eighth cylinder
			P0300	88H	24H	Misfiring counter at 1000rev of the multiple cylinders
			P0301	89H	24H	Misfiring counter at 200rev of the first cylinder
			P0302	8AH	24H	Misfiring counter at 200rev of the second cylinder
			P0303	8BH	24H	Misfiring counter at 200rev of the third cylinder
			P0304	8CH	24H	Misfiring counter at 200rev of the fourth cylinder
			P0305	8DH	24H	Misfiring counter at 200rev of the fifth cylinder
			P0306	8EH	24H	Misfiring counter at 200rev of the fifth cylinder
			P0307	8FH	24H	Misfiring counter at 200rev of the fifth cylinder
			P0308	90H	24H	Misfiring counter at 200rev of the fifth cylinder
			P0300	91H	24H	Misfiring counter at 1000rev of the single cylinder
			P0300	92H	24H	Misfiring counter at 200rev of the single cylinder
			P0300	93H	24H	Misfiring counter at 200rev of the multiple cylinders

Item	OBD-MID	Self-diagnostic test item	DTC	Test value and Test limit (GST display)		Description
				TID	Unit and Scaling ID	
MISFIRE	A2H	No.1 Cylinder Misfire	P0301	0BH	24H	EWMA (Exponential Weighted Moving Average) misfire counts for last 10 driving cycles
			P0301	0CH	24H	Misfire counts for last/current driving cycles
	A3H	No.2 Cylinder Misfire	P0302	0BH	24H	EWMA (Exponential Weighted Moving Average) misfire counts for last 10 driving cycles
			P0302	0CH	24H	Misfire counts for last/current driving cycles
	A4H	No.3 Cylinder Misfire	P0303	0BH	24H	EWMA (Exponential Weighted Moving Average) misfire counts for last 10 driving cycles
			P0303	0CH	24H	Misfire counts for last/current driving cycles
	A5H	No.4 Cylinder Misfire	P0304	0BH	24H	EWMA (Exponential Weighted Moving Average) misfire counts for last 10 driving cycles
			P0304	0CH	24H	Misfire counts for last/current driving cycles
	A6H	No.5 Cylinder Misfire	P0305	0BH	24H	EWMA (Exponential Weighted Moving Average) misfire counts for last 10 driving cycles
			P0305	0CH	24H	Misfire counts for last/current driving cycles
	A7H	No.6 Cylinder Misfire	P0306	0BH	24H	EWMA (Exponential Weighted Moving Average) misfire counts for last 10 driving cycles
			P0306	0CH	24H	Misfire counts for last/current driving cycles
	A8H	No.7 Cylinder Misfire	P0307	0BH	24H	EWMA (Exponential Weighted Moving Average) misfire counts for last 10 driving cycles
			P0307	0CH	24H	Misfire counts for last/current driving cycles
	A9H	No.8 Cylinder Misfire	P0308	0BH	24H	EWMA (Exponential Weighted Moving Average) misfire counts for last 10 driving cycles
			P0308	0CH	24H	Misfire counts for last/current driving cycles

HOW TO ERASE EMISSION-RELATED DIAGNOSTIC INFORMATION

How to Erase DTC

With CONSULT-III

NOTE:

- If the ignition switch stays ON after repair work, be sure to turn ignition switch OFF once.Wait at least 10 seconds and then turn it ON (engine stopped) again.
- If the DTC is not for A/T related items (see EC-9, "DTC No. Index"), skip step 1.

1. Erase DTC in TCM. Refer to AT-36, "OBD-II Diagnostic Trouble Code (DTC)".
2. Select “ENGINE” with CONSULT-III.

3. Select “SELF-DIAG RESULTS”.
4. Touch “ERASE”. (DTC in ECM will be erased.)

WITH GST

NOTE:

- If the ignition switch stays ON after repair work, be sure to turn ignition switch OFF once.Wait at least 10 seconds and then turn it ON (engine stopped) again.
- If the DTC is not for A/T related items (see EC-9, "DTC No. Index"), skip step 1.

1. Erase DTC in TCM. Refer to AT-36, "OBD-II Diagnostic Trouble Code (DTC)".
2. Select Service $04 with GST (Generic Scan Tool).

No Tools

NOTE:

- If the ignition switch stays ON after repair work, be sure to turn ignition switch OFF once.Wait at least 10 seconds and then turn it ON (engine stopped) again.
- If the DTC is not for A/T related items (see EC-9, "DTC No. Index"), skip step 1.

1. Erase DTC in TCM. Refer to AT-36, "OBD-II Diagnostic Trouble Code (DTC)".
2. Erase DTC in ECM. Refer to How to Erase Diagnostic Test Mode II (Self-diagnostic Results).

- **If the battery is disconnected, the emission-related diagnostic information will be lost within 24 hours.**
- **The following data are cleared when the ECM memory is erased.**

- Diagnostic trouble codes
- 1st trip diagnostic trouble codes
- Freeze frame data
- 1st trip freeze frame data
- System readiness test (SRT) codes
- Test values

Actual work procedures are explained using a DTC as an example. Be careful so that not only the DTC, but all of the data listed above, are cleared from the ECM memory during work procedures.

Malfunction Indicator Lamp (MIL)

INFOID:0000000001717187

DESCRIPTION

The MIL is located on the instrument panel.

1. The MIL will light up when the ignition switch is turned ON without the engine running. This is a bulb check.
   If the MIL does not light up, refer to DI-23, or see EC-616.
2. When the engine is started, the MIL should go off.
   If the MIL remains on, the on board diagnostic system has detected an engine system malfunction.

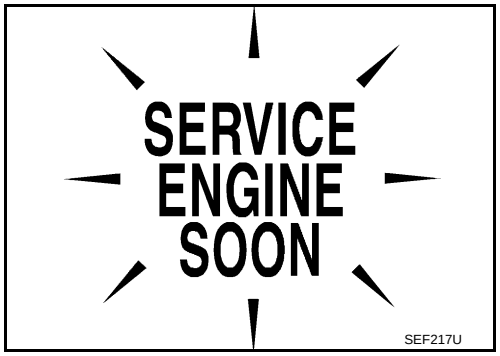

ON BOARD DIAGNOSTIC SYSTEM FUNCTION

The on board diagnostic system has the following three functions.

Diagnostic Test Mode	KEY and ENG. Status	Function	Explanation of Function
Mode I	Ignition switch in ON position  Engine stopped 	BULB CHECK	This function checks the MIL bulb for damage (blown, open circuit, etc.). If the MIL does not come on, check MIL circuit.
	Engine running 	MALFUNCTION WARNING	This is a usual driving condition. When a malfunction is detected twice in two consecutive driving cycles (two trip detection logic), the MIL will light up to inform the driver that a malfunction has been detected. The following malfunctions will light up or blink the MIL in the 1st trip. • Misfire (Possible three way catalyst damage) • One trip detection diagnoses
Mode II	Ignition switch in ON position  Engine stopped 	SELF-DIAGNOSTIC RESULTS	This function allows DTCs and 1st trip DTCs to be read.

When there is an open circuit on MIL circuit, the ECM cannot warn the driver by lighting up MIL when there is malfunction on engine control system.
Therefore, when electrical controlled throttle and part of ECM related diagnoses are continuously detected as NG for 5 trips, ECM warns the driver that engine control system malfunctions and MIL circuit is open by means of operating fail-safe function.
The fail-safe function also operates when above diagnoses except MIL circuit are detected, and demands the driver to repair the malfunction.

Engine operating condition in fail-safe mode	Engine speed will not rise more than 2,500 rpm due to the fuel cut

MIL Flashing Without DTC
When any SRT codes are not set, MIL may flash without DTC. For the details, refer to EC-43, "Emission-related Diagnostic Information".

HOW TO SWITCH DIAGNOSTIC TEST MODE

NOTE:
- **It is better to count the time accurately with a clock.**
- **It is impossible to switch the diagnostic mode when an accelerator pedal position sensor circuit has a malfunction.**
- **Always ECM returns to Diagnostic Test Mode I after ignition switch is turned OFF.**

How to Set Diagnostic Test Mode II (Self-diagnostic Results)

1. Confirm that accelerator pedal is fully released, turn ignition switch ON and wait 3 seconds.
2. Repeat the following procedure quickly five times within 5 seconds.

a. Fully depress the accelerator pedal.
b. Fully release the accelerator pedal.

3. Wait 7 seconds, fully depress the accelerator pedal and keep it for approx. 10 seconds until the MIL starts blinking.
   NOTE:

Do not release the accelerator pedal for 10 seconds if MIL may start blinking on the halfway of this 10 seconds. This blinking is displaying SRT status and is continued for another 10 seconds. For the details, refer to EC-43, "Emission-related Diagnostic Information".

4. Fully release the accelerator pedal.
   NOTE:
   Wait until the same DTC (or 1st trip DTC) appears to confirm all DTCs certainly.
   ECM has entered to Diagnostic Test Mode II (Self-diagnostic results).

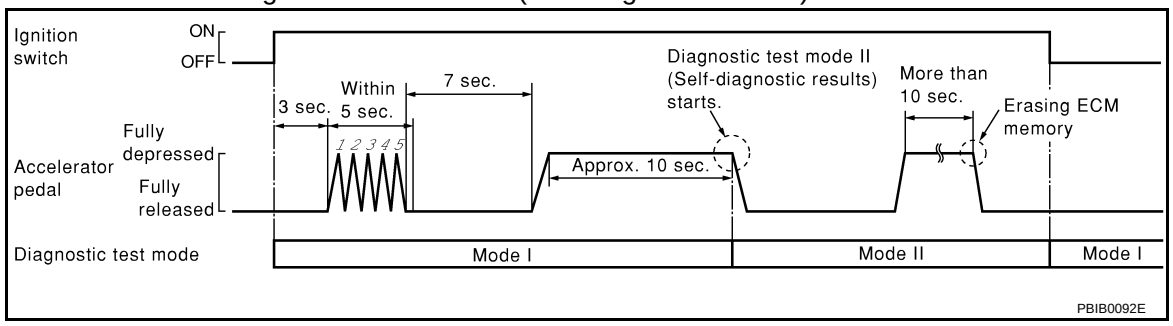

How to Erase Diagnostic Test Mode II (Self-diagnostic Results)

1. Set ECM in Diagnostic Test Mode II (Self-diagnostic results). Refer to "How to Set Diagnostic Test Mode II (Self-diagnostic Results)".
2. Fully depress the accelerator pedal and keep it for more than 10 seconds.
   The emission-related diagnostic information has been erased from the backup memory in the ECM.
3. Fully release the accelerator pedal, and confirm the DTC 0000 is displayed.

DIAGNOSTIC TEST MODE I — BULB CHECK

In this mode, the MIL on the instrument panel should stay ON. If it remains OFF, check the bulb. Refer to DI-23 or see EC-616.

DIAGNOSTIC TEST MODE I — MALFUNCTION WARNING

MIL	Condition
ON	When the malfunction is detected.
OFF	No malfunction.

These DTC numbers are clarified in Diagnostic Test Mode II (SELF-DIAGNOSTIC RESULTS)

DIAGNOSTIC TEST MODE II — SELF-DIAGNOSTIC RESULTS

In this mode, the DTC and 1st trip DTC are indicated by the number of blinks of the MIL as shown below.
The DTC and 1st trip DTC are displayed at the same time. If the MIL does not illuminate in diagnostic test mode I (Malfunction warning), all displayed items are 1st trip DTCs. If only one code is displayed when the MIL illuminates in diagnostic test mode II (SELF-DIAGNOSTIC RESULTS), it is a DTC; if two or more codes are displayed, they may be either DTCs or 1st trip DTCs. DTC No. is same as that of 1st trip DTC. These uniden-

tified codes can be identified by using the CONSULT-III or GST. A DTC will be used as an example for how to read a code.

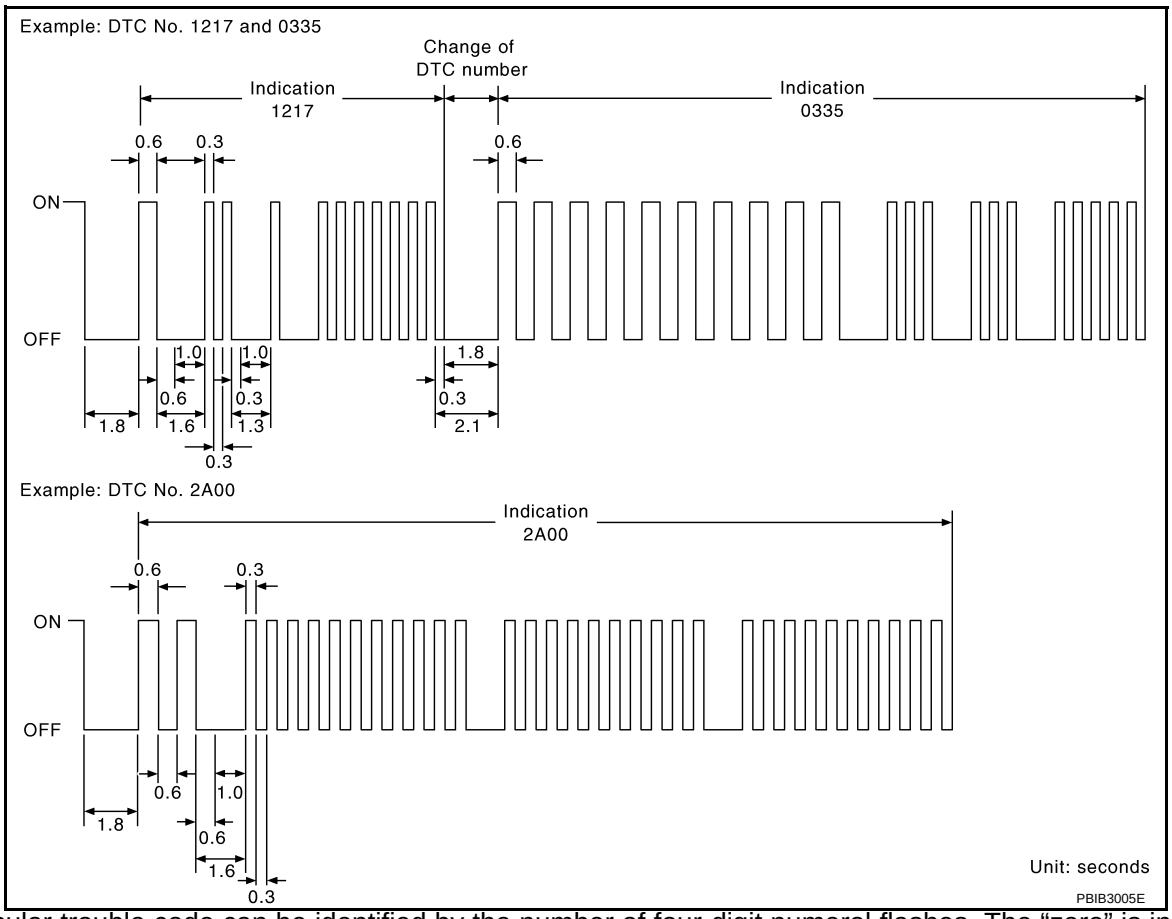

A particular trouble code can be identified by the number of four-digit numeral flashes. The “zero” is indicated by the number of ten flashes. The “A” is indicated by the number of eleven flash. The length of time the 1,000th-digit numeral flashes on and off is 1.2 seconds consisting of an ON (0.6-second) - OFF (0.6-second) cycle.

The 100th-digit numeral and lower digit numerals consist of a 0.3-second ON and 0.3-second OFF cycle.

A change from one digit numeral to another occurs at an interval of 1.0-second OFF. In other words, the later numeral appears on the display 1.3 seconds after the former numeral has disappeared.

A change from one trouble code to another occurs at an interval of 1.8-second OFF.

In this way, all the detected malfunctions are classified by their DTC numbers. The DTC 0000 refers to no malfunction. (See EC-9)

How to Erase Diagnostic Test Mode II (Self-diagnostic Results)

The DTC can be erased from the back up memory in the ECM by depressing accelerator pedal. Refer to "How to Erase Diagnostic Test Mode II (Self-diagnostic Results)".

- **If the battery is disconnected, the DTC will be lost from the backup memory within 24 hours.**
- **Be careful not to erase the stored memory before starting trouble diagnoses.**

OBD System Operation Chart

INFOID:0000000001717188

RELATIONSHIP BETWEEN MIL, 1ST TRIP DTC, DTC, AND DETECTABLE ITEMS

- When a malfunction is detected for the first time, the 1st trip DTC and the 1st trip freeze frame data are stored in the ECM memory.
- When the same malfunction is detected in two consecutive trips, the DTC and the freeze frame data are stored in the ECM memory, and the MIL will come on. For details, refer to EC-42, "Two Trip Detection Logic".
- The MIL will go off after the vehicle is driven 3 times (driving pattern B) with no malfunction. The drive is counted only when the recorded driving pattern is met (as stored in the ECM). If another malfunction occurs while counting, the counter will reset.
- The DTC and the freeze frame data will be stored until the vehicle is driven 40 times (driving pattern A) without the same malfunction recurring (except for Misfire and Fuel Injection System). For Misfire and Fuel Injection System, the DTC and freeze frame data will be stored until the vehicle is driven 80 times (driving pattern

C) without the same malfunction recurring. The “TIME” in “SELF-DIAGNOSTIC RESULTS” mode of CONSULT-III will count the number of times the vehicle is driven.

- The 1st trip DTC is not displayed when the self-diagnosis results in OK for the 2nd trip.

SUMMARY CHART

Items	Fuel Injection System	Misfire	Other
MIL (goes off)	3 (pattern B)	3 (pattern B)	3 (pattern B)
DTC, Freeze Frame Data (no display)	80 (pattern C)	80 (pattern C)	40 (pattern A)
1st Trip DTC (clear)	1 (pattern C), *1	1 (pattern C), *1	1 (pattern B)
1st Trip Freeze Frame Data (clear)	*1, *2	*1, *2	1 (pattern B)

For details about patterns B and C under “Fuel Injection System” and “Misfire”, see "EXPLANATION FOR DRIVING PATTERNS FOR “MISFIRE <EXHAUST QUALITY DETERIORATION>”, “FUEL INJECTION SYSTEM””.

For details about patterns A and B under “Other”, see "EXPLANATION FOR DRIVING PATTERNS FOR “MISFIRE <EXHAUST QUALITY DETERIORATION>”, “FUEL INJECTION SYSTEM””.

*1: Clear timing is at the moment OK is detected.

*2: Clear timing is when the same malfunction is detected in the 2nd trip.

RELATIONSHIP BETWEEN MIL, DTC, 1ST TRIP DTC AND DRIVING PATTERNS FOR “MISFIRE ” <EXHAUST QUALITY DETERIORATION>, “FUEL INJECTION SYSTEM”

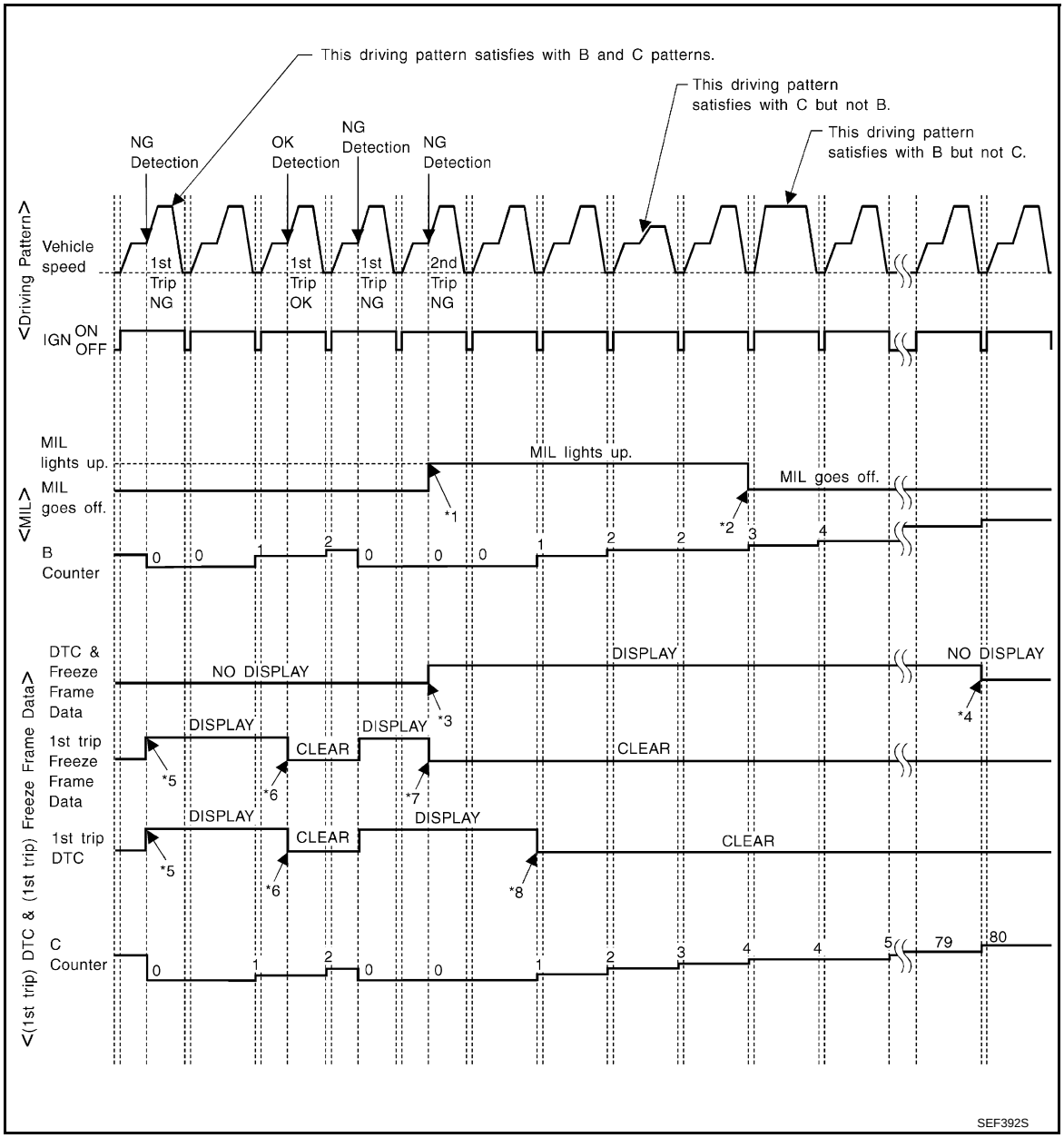

*1: When the same malfunction is detected in two consecutive trips, MIL will light up.

*2: MIL will go off after vehicle is driven 3 times (pattern B) without any malfunctions.

*3: When the same malfunction is detected in two consecutive trips, the DTC and the freeze frame data will be stored in ECM.

*4: The DTC and the freeze frame data will not be displayed any longer after vehicle is driven 80 times (pattern C) without the same malfunction. (The DTC and the freeze frame data still remain in ECM.)

*5: When a malfunction is detected for the first time, the 1st trip DTC and the 1st trip freeze frame data will be stored in ECM.

*6: The 1st trip DTC and the 1st trip freeze frame data will be cleared at the moment OK is detected.

*7: When the same malfunction is detected in the 2nd trip, the 1st trip freeze frame data will be cleared.

*8: 1st trip DTC will be cleared when vehicle is driven once (pattern C) without the same malfunction after DTC is stored in ECM.

EXPLANATION FOR DRIVING PATTERNS FOR “MISFIRE <EXHAUST QUALITY DETERIORATION>”, “FUEL INJECTION SYSTEM”

<Driving Pattern B>

Driving pattern B means the vehicle operation as follows:

All components and systems should be monitored at least once by the OBD system.
- The B counter will be cleared when the malfunction is detected once regardless of the driving pattern.
- The B counter will be counted up when driving pattern B is satisfied without any malfunction.
- The MIL will go off when the B counter reaches 3. (*2 in OBD SYSTEM OPERATION CHART)

<Driving Pattern C>
Driving pattern C means the vehicle operation as follows:
The following conditions should be satisfied at the same time:
Engine speed: (Engine speed in the freeze frame data) ±375 rpm
Calculated load value: (Calculated load value in the freeze frame data) x (1±0.1) [%]
Engine coolant temperature (T) condition:
- When the freeze frame data shows lower than 70°C (158°F), T should be lower than 70°C (158°F).
- When the freeze frame data shows higher than or equal to 70°C (158°F), T should be higher than or equal to 70°C (158°F).

Example:
If the stored freeze frame data is as follows:
Engine speed: 850 rpm, Calculated load value: 30%, Engine coolant temperature: 80°C (176°F)
To be satisfied with driving pattern C, the vehicle should run under the following conditions:
Engine speed: 475 - 1,225 rpm, Calculated load value: 27 - 33%, Engine coolant temperature: more than 70°C (158°F)
- The C counter will be cleared when the malfunction is detected regardless of vehicle conditions above.
- The C counter will be counted up when vehicle conditions above is satisfied without the same malfunction.
- The DTC will not be displayed after C counter reaches 80.
- The 1st trip DTC will be cleared when C counter is counted once without the same malfunction after DTC is stored in ECM.

RELATIONSHIP BETWEEN MIL, DTC, 1ST TRIP DTC AND DRIVING PATTERNS EXCEPT FOR “MISFIRE <EXHAUST QUALITY DETERIORATION>”, “FUEL INJECTION SYSTEM”

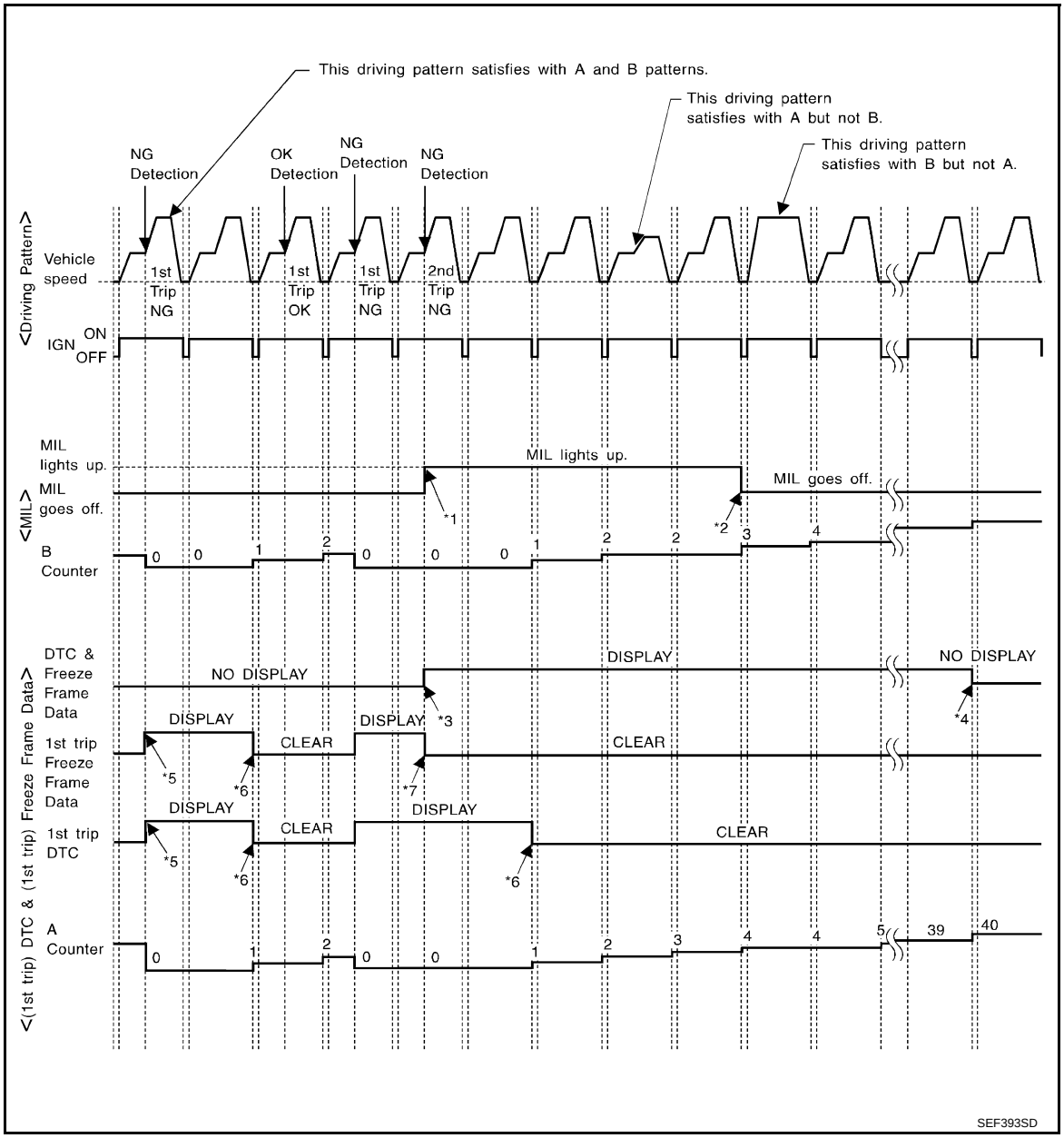

*1: When the same malfunction is detected in two consecutive trips, MIL will light up.

*2: MIL will go off after vehicle is driven 3 times (pattern B) without any malfunctions.

*3: When the same malfunction is detected in two consecutive trips, the DTC and the freeze frame data will be stored in ECM.

*4: The DTC and the freeze frame data will not be displayed any longer after vehicle is driven 40 times (pattern A) without the same malfunction. (The DTC and the freeze frame data still remain in ECM.)

*5: When a malfunction is detected for the first time, the 1st trip DTC and the 1st trip freeze frame data will be stored in ECM.

*6: 1st trip DTC will be cleared after vehicle is driven once (pattern B) without the same malfunction.

*7: When the same malfunction is detected in the 2nd trip, the 1st trip freeze frame data will be cleared.

EXPLANATION FOR DRIVING PATTERNS EXCEPT FOR “MISFIRE <EXHAUST QUALITY DETERIORATION>”, “FUEL INJECTION SYSTEM”

<Driving Pattern A>

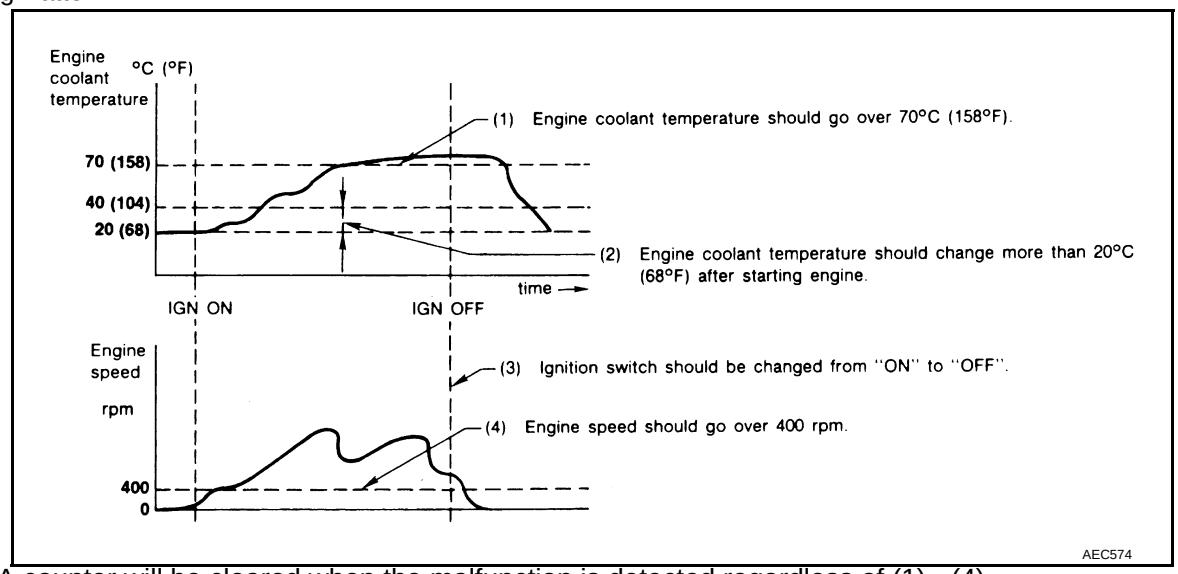

- The A counter will be cleared when the malfunction is detected regardless of (1) - (4).
- The A counter will be counted up when (1) - (4) are satisfied without the same malfunction.
- The DTC will not be displayed after the A counter reaches 40.

<Driving Pattern B>

Driving pattern B means the vehicle operation as follows:

All components and systems should be monitored at least once by the OBD system.

- The B counter will be cleared when the malfunction is detected once regardless of the driving pattern.
- The B counter will be counted up when driving pattern B is satisfied without any malfunctions.
- The MIL will go off when the B counter reaches 3 (*2 in OBD SYSTEM OPERATION CHART).

BASIC SERVICE PROCEDURE

Basic Inspection

INFOID:0000000001717189

1. INSPECTION START

1. Check service records for any recent repairs that may indicate a related malfunction, or a current need for scheduled maintenance.
2. Open engine hood and check the following:
- Harness connectors for improper connections
- Wiring harness for improper connections, pinches and cut
- Vacuum hoses for splits, kinks and improper connections
- Hoses and ducts for leaks
- Air cleaner clogging
- Gasket
3. Confirm that electrical or mechanical loads are not applied.
- Headlamp switch is OFF.
- Air conditioner switch is OFF.
- Rear window defogger switch is OFF.
- Steering wheel is in the straight-ahead position, etc.
4. Start engine and warm it up until engine coolant temperature indicator points the middle of gauge.
   Ensure engine stays below 1,000 rpm.

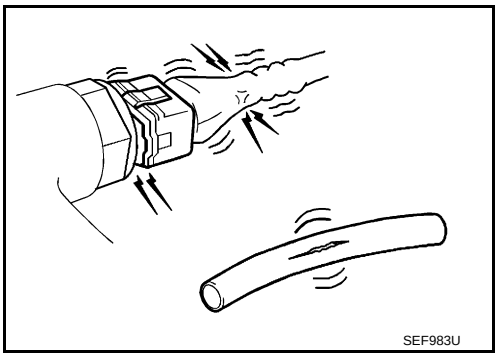
SEF983U

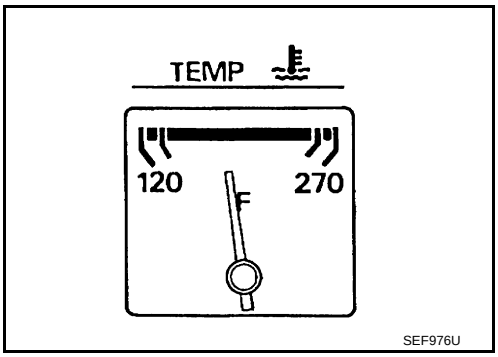

SEF976U

5. Run engine at about 2,000 rpm for about 2 minutes under no load.
6. Make sure that no DTC is displayed with CONSULT-III or GST.

<u>OK or NG</u>

OK >> GO TO 3.
NG >> GO TO 2.

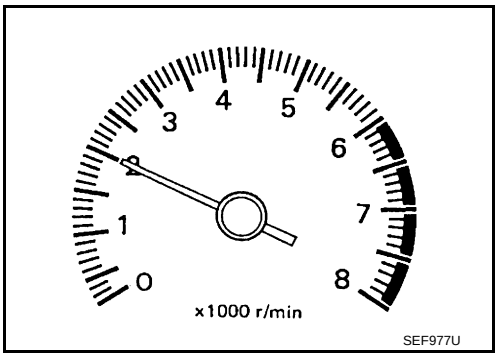

SEF977U

2. REPAIR OR REPLACE

Repair or replace components as necessary according to corresponding Diagnostic Procedure.

>> GO TO 3.

3. CHECK TARGET IDLE SPEED

With CONSULT-III

1. Run engine at about 2,000 rpm for about 2 minutes under no load.

2. Rev engine (2,000 to 3,000 rpm) two or three times under no load, then run engine at idle speed for about 1 minute.
3. Read idle speed in “DATA MONITOR” mode with CONSULT-III. Refer to EC-71, "Idle Speed and Ignition Timing Check".

675 ± 50 rpm (in P or N position)

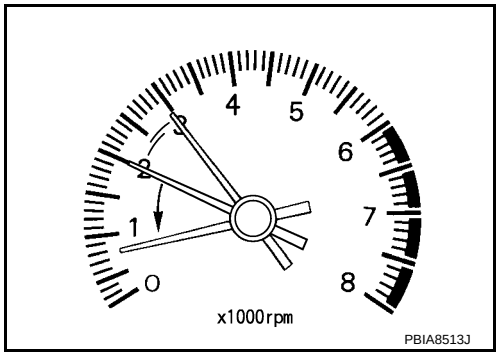

Without CONSULT-III
1. Run engine at about 2,000 rpm for about 2 minutes under no load.
2. Rev engine (2,000 to 3,000 rpm) two or three times under no load, then run engine at idle speed for about 1 minute.
3. Check idle speed. Refer to EC-71, "Idle Speed and Ignition Timing Check".

675 ± 50 rpm (in P or N position)

OK or NG

OK >> GO TO 10.
NG >> GO TO 4.

4. PERFORM ACCELERATOR PEDAL RELEASED POSITION LEARNING

1. Stop engine.
2. Perform EC-73, "Accelerator Pedal Released Position Learning".

>> GO TO 5.

5. PERFORM THROTTLE VALVE CLOSED POSITION LEARNING

Perform EC-73, "Throttle Valve Closed Position Learning".

>> GO TO 6.

6. PERFORM IDLE AIR VOLUME LEARNING

Refer to EC-73, "Idle Air Volume Learning".
Is Idle Air Volume Learning carried out successfully?

Yes or No

Yes >> GO TO 7.
No >> 1. Follow the instruction of Idle Air Volume Learning.
2. GO TO 4.

7. CHECK TARGET IDLE SPEED AGAIN

With CONSULT-III
1. Start engine and warm it up to normal operating temperature.
2. Read idle speed in “DATA MONITOR” mode with CONSULT-III. Refer to EC-71, "Idle Speed and Ignition Timing Check".

675 ± 50 rpm (in P or N position)

Without CONSULT-III
1. Start engine and warm it up to normal operating temperature.
2. Check idle speed. Refer to EC-71, "Idle Speed and Ignition Timing Check".

675 ± 50 rpm (in P or N position)

OK or NG

OK >> GO TO 10.

NG >> GO TO 8.

8. DETECT MALFUNCTIONING PART

Check the following.
- Check camshaft position sensor (PHASE) and circuit. Refer to EC-325.
- Check crankshaft position sensor (POS) and circuit. Refer to EC-319.

OK or NG

OK >> GO TO 9.
NG >> 1. Repair or replace.
2. GO TO 4.

9. CHECK ECM FUNCTION

1. Substitute another known-good ECM to check ECM function. (ECM may be the cause of an incident, but this is a rare case.)
2. Perform initialization of NVIS (NATS) system and registration of all NVIS (NATS) ignition key IDs. Refer to BL-180.

>> GO TO 4.

10. CHECK IGNITION TIMING

1. Run engine at idle.
2. Check ignition timing with a timing light.
Refer to EC-71, "Idle Speed and Ignition Timing Check".

A : Timing indicator

15 ± 5° BTDC (in P or N position)

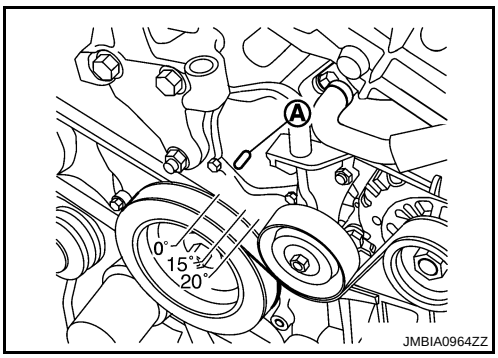

OK or NG

OK >> GO TO 19.
NG >> GO TO 11.

11. PERFORM ACCELERATOR PEDAL RELEASED POSITION LEARNING

1. Stop engine.
2. Perform EC-73, "Accelerator Pedal Released Position Learning".

>> GO TO 12.

12. PERFORM THROTTLE VALVE CLOSED POSITION LEARNING

Perform EC-73, "Throttle Valve Closed Position Learning".

>> GO TO 13.

13. PERFORM IDLE AIR VOLUME LEARNING

Refer to EC-73, "Idle Air Volume Learning".
Is Idle Air Volume Learning carried out successfully?

Yes or No

Yes >> GO TO 14.
No >> 1. Follow the instruction of Idle Air Volume Learning.
2. GO TO 4.

14. CHECK TARGET IDLE SPEED AGAIN

With CONSULT-III
1. Start engine and warm it up to normal operating temperature.
2. Read idle speed in “DATA MONITOR” mode with CONSULT-III. Refer to EC-71, "Idle Speed and Ignition Timing Check".

675 ± 50 rpm (in P or N position)

Without CONSULT-III

1. Start engine and warm it up to normal operating temperature.
2. Check idle speed. Refer to EC-71, "Idle Speed and Ignition Timing Check".

675 ± 50 rpm (in P or N position)

OK or NG

OK >> GO TO 15.
NG >> GO TO 17.

15. CHECK IGNITION TIMING AGAIN

1. Run engine at idle.
2. Check ignition timing with a timing light.
   Refer to EC-71, "Idle Speed and Ignition Timing Check".

A : Timing indicator

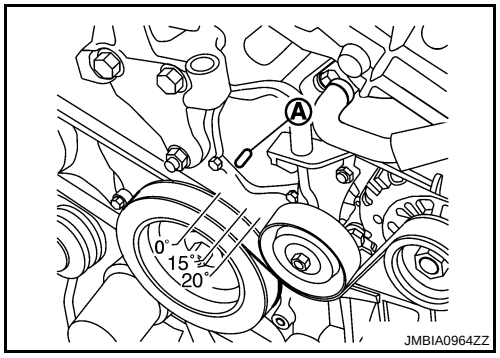

15 ± 5° BTDC (in P or N position)

OK or NG

OK >> GO TO 19.
NG >> GO TO 16.

16. CHECK TIMING CHAIN INSTALLATION

Check timing chain installation. Refer to EM-54.

OK or NG

OK >> GO TO 17.
NG >> 1. Repair the timing chain installation.
2. GO TO 4.

17. DETECT MALFUNCTIONING PART

Check the following.
- Check camshaft position sensor (PHASE) and circuit. Refer to EC-325.
- Check crankshaft position sensor (POS) and circuit. Refer to EC-319.

OK or NG

OK >> GO TO 18.
NG >> 1. Repair or replace.
2. GO TO 4.

18. CHECK ECM FUNCTION

1. Substitute another known-good ECM to check ECM function. (ECM may be the cause of an incident, but this is a rare case.)
2. Perform initialization of NVIS (NATS) system and registration of all NVIS (NATS) ignition key IDs. Refer to BL-180.

>> GO TO 4.

19. INSPECTION END

Did you replace the ECM, referring this Basic Inspection procedure?

Yes or No

Yes >> 1. Perform EC-72, "VIN Registration".
2. **INSPECTION END**
No >> **INSPECTION END**

Idle Speed and Ignition Timing Check

INFOID:0000000001717190

IDLE SPEED

With CONSULT-III

Check idle speed in “DATA MONITOR” mode with CONSULT-III.

With GST
Check idle speed with GST.

IGNITION TIMING

Any of following two methods may be used.

1. Slide the harness protector off ignition coil No.1 to clear the wires.
2. Attach timing light to the ignition coil No.1 wires as shown in the figure.

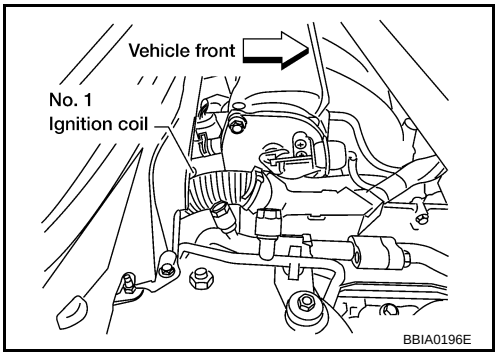

3. Check ignition timing.

A : Timing indicator

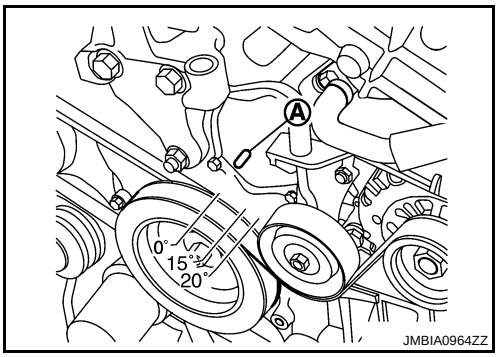

Procedure After Replacing ECM

INFOID:0000000001717191

When replacing ECM, the following procedure must be performed.

1. Perform initialization of NVIS (NATS) system and registration of all NVIS (NATS) ignition key IDs. Refer to BL-181, "ECM Re-communicating Function".
2. Perform EC-72, "VIN Registration".
3. Perform EC-73, "Accelerator Pedal Released Position Learning".
4. Perform EC-73, "Throttle Valve Closed Position Learning".
5. Perform EC-73, "Idle Air Volume Learning".

VIN Registration

INFOID:0000000001717192

DESCRIPTION

VIN Registration is an operation to registering VIN in ECM. It must be performed each time ECM is replaced.

NOTE:

Accurate VIN which is registered in ECM may be required for Inspection & Maintenance (I/M).

OPERATION PROCEDURE

With CONSULT-III

1. Check the VIN of the vehicle and note it. Refer to GI-43.
2. Turn ignition switch ON and engine stopped.
3. Select “VIN REGISTRATION” in “WORK SUPPORT” mode.
4. Follow the instruction of CONSULT-III display.

Accelerator Pedal Released Position Learning

INFOID:0000000001717193

DESCRIPTION

Accelerator Pedal Released Position Learning is an operation to learn the fully released position of the accelerator pedal by monitoring the accelerator pedal position sensor output signal. It must be performed each time harness connector of accelerator pedal position sensor or ECM is disconnected.

OPERATION PROCEDURE

1. Make sure that accelerator pedal is fully released.
2. Turn ignition switch ON and wait at least 2 seconds.
3. Turn ignition switch OFF and wait at least 10 seconds.
4. Turn ignition switch ON and wait at least 2 seconds.
5. Turn ignition switch OFF and wait at least 10 seconds.

Throttle Valve Closed Position Learning

INFOID:0000000001717194

DESCRIPTION

Throttle Valve Closed Position Learning is an operation to learn the fully closed position of the throttle valve by monitoring the throttle position sensor output signal. It must be performed each time harness connector of electric throttle control actuator or ECM is disconnected.

OPERATION PROCEDURE

1. Make sure that accelerator pedal is fully released.
2. Turn ignition switch ON.
3. Turn ignition switch OFF and wait at least 10 seconds.
   Make sure that throttle valve moves during above 10 seconds by confirming the operating sound.

Idle Air Volume Learning

INFOID:0000000001717195

DESCRIPTION

Idle Air Volume Learning is an operation to learn the idle air volume that keeps each engine within the specific range. It must be performed under any of the following conditions:

- Each time electric throttle control actuator or ECM is replaced.
- Idle speed or ignition timing is out of specification.

PREPARATION

Before performing Idle Air Volume Learning, make sure that all of the following conditions are satisfied.
Learning will be cancelled if any of the following conditions are missed for even a moment.

- Battery voltage: More than 12.9V (At idle)
- Engine coolant temperature: 70 - 100°C (158 - 212°F)
- PNP switch: ON
- Electric load switch: OFF
  (Air conditioner, headlamp, rear window defogger)
  On vehicles equipped with daytime light systems, if the parking brake is applied before the engine is start the headlamp will not be illuminated.
- Steering wheel: Neutral (Straight-ahead position)
- Vehicle speed: Stopped
- Transmission: Warmed-up
- With CONSULT-III: Drive vehicle until “FLUID TEMP SE” in “DATA MONITOR” mode of “A/T” system indicates less than 0.9V.
- Without CONSULT-III: Drive vehicle for 10 minutes.

OPERATION PROCEDURE

With CONSULT-III

1. Perform EC-73, "Accelerator Pedal Released Position Learning".
2. Perform EC-73, "Throttle Valve Closed Position Learning".
3. Start engine and warm it up to normal operating temperature.
4. Check that all items listed under the topic PREPARATION (previously mentioned) are in good order.

5. Select “IDLE AIR VOL LEARN” in “WORK SUPPORT” mode.
6. Touch “START” and wait 20 seconds.
7. Make sure that “CMPLT” is displayed on CONSULT-III screen. If “CMPLT” is not displayed, Idle Air Volume Learning will not be carried out successfully. In this case, find the cause of the incident by referring to the Diagnostic Procedure below.
8. Rev up the engine two or three times and make sure that idle speed and ignition timing are within the specifications.

ITEM	SPECIFICATION
Idle speed	675 ± 50 rpm (in P or N position)
Ignition timing	15 ± 5° BTDC (in P or N position)

Without CONSULT-III

NOTE:
- **It is better to count the time accurately with a clock.**
- **It is impossible to switch the diagnostic mode when an accelerator pedal position sensor circuit has a malfunction.**

1. Perform EC-73, "Accelerator Pedal Released Position Learning".
2. Perform EC-73, "Throttle Valve Closed Position Learning".
3. Start engine and warm it up to normal operating temperature.
4. Check that all items listed under the topic PREPARATION (previously mentioned) are in good order.
5. Turn ignition switch OFF and wait at least 10 seconds.
6. Confirm that accelerator pedal is fully released, turn ignition switch ON and wait 3 seconds.
7. Repeat the following procedure quickly five times within 5 seconds.

a. Fully depress the accelerator pedal.
b. Fully release the accelerator pedal.

8. Wait 7 seconds, fully depress the accelerator pedal and keep it for approx. 20 seconds until the MIL stops blinking and turned ON.
9. Fully release the accelerator pedal within 3 seconds after the MIL turned ON.
10. Start engine and let it idle.
11. Wait 20 seconds.

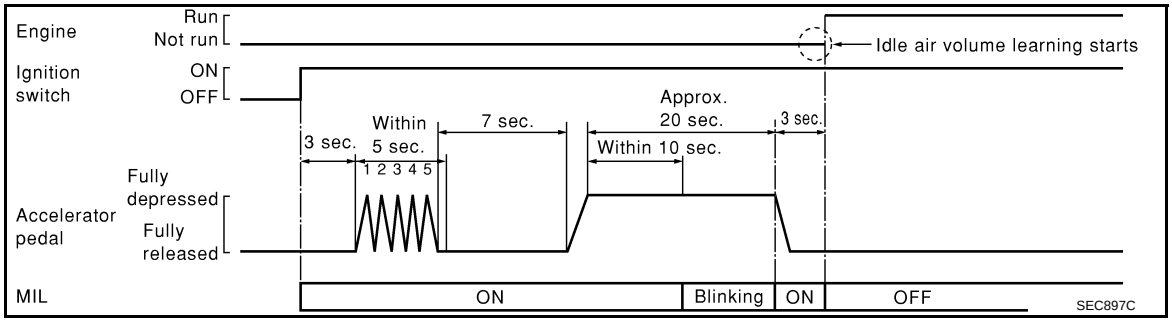

12. Rev up the engine two or three times and make sure that idle speed and ignition timing are within the specifications.

ITEM	SPECIFICATION
Idle speed	675 ± 50 rpm (in P or N position)
Ignition timing	15 ± 5° BTDC (in P or N position)

13. If idle speed and ignition timing are not within the specification, Idle Air Volume Learning will not be carried out successfully. In this case, find the cause of the incident by referring to the DIAGNOSTIC PROCEDURE below.

DIAGNOSTIC PROCEDURE

If idle air volume learning cannot be performed successfully, proceed as follows:

1. **Check that throttle valve is fully closed.**

2. **Check PCV valve operation.**
3. **Check that downstream of throttle valve is free from air leakage.**
4. **When the above three items check out OK, engine component parts and their installation condition are questionable. Check and eliminate the cause of the incident.**
   It is useful to perform EC-122.
5. **If any of the following conditions occur after the engine has started, eliminate the cause of the incident and perform Idle Air Volume Learning all over again:**
   - **Engine stalls.**
   - **Erroneous idle.**

Fuel Pressure Check

INFOID:0000000001717196

FUEL PRESSURE RELEASE

With CONSULT-III

1. Turn ignition switch ON.
2. Perform “FUEL PRESSURE RELEASE” in “WORK SUPPORT” mode with CONSULT-III.
3. Start engine.
4. After engine stalls, crank it two or three times to release all fuel pressure.
5. Turn ignition switch OFF.

Without CONSULT-III

1. Remove fuel pump fuse located in IPDM E/R.
2. Start engine.
3. After engine stalls, crank it two or three times to release all fuel pressure.
4. Turn ignition switch OFF.
5. Reinstall fuel pump fuse after servicing fuel system.

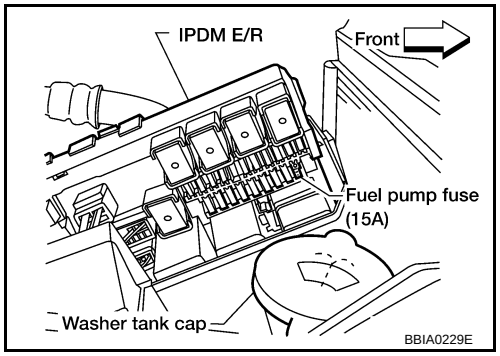

FUEL PRESSURE CHECK

CAUTION:
Before disconnecting fuel line, release fuel pressure from fuel line to eliminate danger.
NOTE:
Prepare pans or saucers under the disconnected fuel line because the fuel may spill out. The fuel pressure cannot be completely released because V42 models do not have fuel return system.

Method A

CAUTION:
- **The fuel hose connection method used when taking fuel pressure check must not be used for other purposes.**
- **Be careful not to scratch or put debris around connection area when servicing, so that the quick connector maintains sealability with O-rings inside.**

1. Release fuel pressure to zero. Refer to FUEL PRESSURE RELEASE”.
2. Prepare fuel hose for fuel pressure check, and connect fuel pressure gauge.
   - Use suitable fuel hose for fuel pressure check (genuine NISSAN fuel hose without quick connector).
   - To avoid unnecessary force or tension to hose, use moderately long fuel hose for fuel pressure check.
   - Do not use the fuel hose for checking fuel pressure with damage or cracks on it.
   - Use Pressure Gauge to check fuel pressure.
3. Remove fuel hose. Refer to EM-23.
   - Do not twist or kink fuel hose because it is plastic hose.
   - Do not remove fuel hose from quick connector.
   - Keep the original fuel hose to be free from intrusion of dust or foreign substances with a suitable cover.

4. Install the fuel pressure gauge as shown in the figure.
   - Wipe off oil or dirt from hose insertion part using cloth moistened with gasoline.
   - Apply proper amount of gasoline between top of the fuel tube and No.1 spool.
   - Insert fuel hose for fuel pressure check until it touches the No.1 spool on fuel tube.
   - Use NISSAN genuine hose clamp (part number: 16439 N4710 or 16439 40U00).
   - When reconnecting fuel line, always use new clamps.
   - When reconnecting fuel hose, check the original fuel hose for damage and abnormality.
   - Use a torque driver to tighten clamps.
   - Install hose clamp to the position within 1 - 2 mm (0.04 - 0.08in).

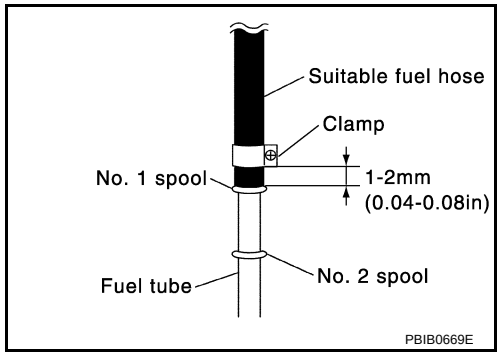

Tightening torque: 1 - 1.5 Nm (0.1 - 0.15 kg-m, 9 - 13in-lb)

   - Make sure that clamp screw does not contact adjacent parts.

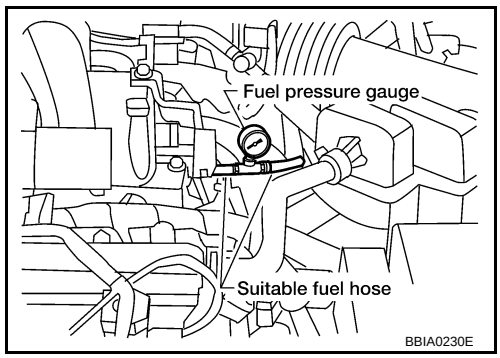

5. After connecting fuel hose for fuel pressure check, pull the hose with a force of approximately 98 N (10 kg, 22lb) to confirm fuel tube does not come off.
6. Turn ignition switch ON and check for fuel leakage.
7. Start engine and check for fuel leakage.
8. Read the indication of fuel pressure gauge.
   - Do not perform fuel pressure check with system operating. Fuel pressure gauge may indicate false readings.
   - During fuel pressure check, confirm for fuel leakage from fuel connection every 3 minutes.

At idling: Approximately 350 kPa (3.57 kg/cm^2, 51 psi)

9. If result is unsatisfactory, go to next step.
10. Check the following.
    - Fuel hoses and fuel tubes for clogging
    - Fuel filter for clogging
    - Fuel pump
    - Fuel pressure regulator for clogging

    If OK, replace fuel pressure regulator.
    If NG, repair or replace.

Method B

CAUTION:
- **Be careful not to scratch or get the fuel hose connection area dirty when servicing, so that thequick connector o-ring maintains sealability.**
- **Use Fuel Pressure Gauge Kit J-44321 and Fuel Pressure Adapter J-44321-6 to check fuel pressure.**

1. Release fuel pressure to zero. Refer to “FUEL PRESSURE RELEASE”.
2. Remove fuel hose using Quick Connector Release J-45488. Refer to EM-38.
   - Do not twist or kink fuel hose because it is plastic hose.
   - Do not remove fuel hose from quick connector.
   - Keep fuel hose connections clean.
3. Install Fuel Pressure Adapter J-44321-6 and Fuel Pressure Gauge (from kit J-44321) as shown in figure.
   - Do not distort or bend fuel rail tube when installing fuel pressure gauge adapter.
   - When reconnecting fuel hose, check the original fuel hose fordamage and abnormality.

4. Turn ignition switch ON (reactivate fuel pump), and check for fuel leakage.
5. Start engine and check for fuel leakage.
6. Read the indication of fuel pressure gauge.
   - During fuel pressure check, check for fuel leakage from fuel connection every 3 minutes.

   At idling: Approximately 350 kPa (3.57 kg/cm^2, 51 psi)

7. If result is unsatisfactory, go to next step.
8. Check the following.
   - Fuel hoses and fuel tubes for clogging
   - Fuel filter for clogging
   - Fuel pump
   - Fuel pressure regulator for clogging

   If OK, replace fuel pressure regulator.
   If NG, repair or replace.
9. Before disconnecting Fuel Pressure Gauge and Fuel Pressure Adapter J-44321-6, release fuel pressure to zero. Refer to “FUEL PRESSURE RELEASE”.

TROUBLE DIAGNOSIS

Trouble Diagnosis Introduction

INFOID:0000000001717197

INTRODUCTION

The engine has an ECM to control major systems such as fuel control, ignition control, idle air control system, etc. The ECM accepts input signals from sensors and instantly drives actuators. It is essential that both input and output signals are proper and stable. At the same time, it is important that there are no malfunctions such as vacuum leaks, fouled spark plugs, or other malfunctions with the engine.

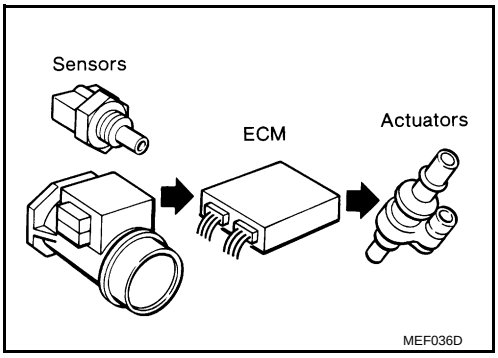

It is much more difficult to diagnose an incident that occurs intermittently rather than continuously. Most intermittent incidents are caused by poor electric connections or improper wiring. In this case, careful checking of suspected circuits may help prevent the replacement of good parts.

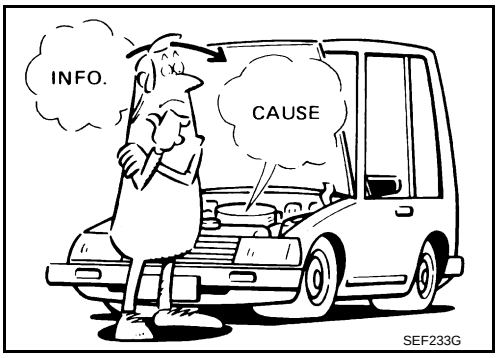

A visual check only may not find the cause of the incidents. A road test with CONSULT-III (or GST) or a circuit tester connected should be performed. Follow the Work Flow on “WORK FLOW”.
Before undertaking actual checks, take a few minutes to talk with a customer who approaches with a driveability complaint. The customer can supply good information about such incidents, especially intermittent ones. Find out what symptoms are present and under what conditions they occur. A Diagnostic Worksheet like the example on “Worksheet Sample” should be used.
Start your diagnosis by looking for conventional malfunctions first. This will help troubleshoot driveability malfunctions on an electronically controlled engine vehicle.

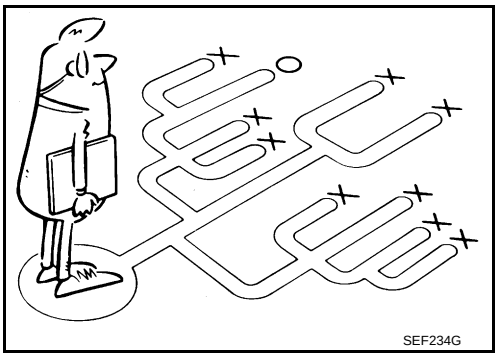

WORK FLOW

Overall Sequence

Detailed Flow

1. GET INFORMATION FOR SYMPTOM

Get the detailed information from the customer about the symptom (the condition and the environment when the incident/malfunction occurred) using the "DIAGNOSTIC WORKSHEET".

>> GO TO 2.

2. CHECK DTC*1

1. Check DTC*1.
2. Perform the following procedure if DTC*1 is displayed.

- Record DTC*1 and freeze frame data*2. (Print them out with CONSULT-III or GST.)
- Erase DTC*1. (Refer to EC-43, "Emission-related Diagnostic Information".)
- Study the relationship between the cause detected by DTC*1 and the symptom described by the customer. (Symptom Matrix Chart is useful. Refer to EC-85, "Symptom Matrix Chart".)

3. Check related service bulletins for information.

Is any symptom described and any DTC detected?

Symptom is described, DTC*1 is displayed>>GO TO 3.
Symptom is described, DTC*1 is not displayed>>GO TO 4.
Symptom is not described, DTC*1 is displayed>>GO TO 5.

3. CONFIRM THE SYMPTOM

Try to confirm the symptom described by the customer (except MIL ON).
DIAGNOSIS WORK SHEET is useful to verify the incident.
Connect CONSULT-III to the vehicle and check real time diagnosis results.
Verify relation between the symptom and the condition when the symptom is detected.

>> GO TO 5.

4. CONFIRM THE SYMPTOM

Try to confirm the symptom described by the customer.
DIAGNOSIS WORK SHEET is useful to verify the incident.
Connect CONSULT-III to the vehicle and check real time diagnosis results.
Verify relation between the symptom and the condition when the symptom is detected.

>> GO TO 6.

5. PERFORM DTC CONFIRMATION PROCEDURE

Perform DTC Confirmation Procedure for the displayed DTC*1, and then make sure that DTC*1 is detected again.

If two or more DTCs*1 are detected, refer to EC-82, "DTC Inspection Priority Chart" and determine trouble diagnosis order.

NOTE:

- Freeze frame data*2 is useful if the DTC*1 is not detected.
- Perform Overall Function Check if DTC Confirmation Procedure is not included on Service Manual. This simplified check procedure is an effective alternative though DTC*1 cannot be detected during this check.
  If the result of Overall Function Check is NG, it is the same as the detection of DTC*1 by DTC Confirmation Procedure.

Is DTC*1 detected?

Yes >> GO TO 10.
No >> Check according to EC-130.

6. PERFORM BASIC INSPECTION

Perform EC-68, "Basic Inspection".

With CONSULT-III>>GO TO 7.
Without CONSULT-III>>GO TO 9.

7. PERFORM SPEC IN DATA MONITOR MODE

With CONSULT-III
Make sure that “MAS A/F SE-B1”, “B/FUEL SCHDL”, and “A/F ALPHA-B1”, “A/F ALPHA-B2” are within the SP value using CONSULT-III “SPEC” in “DATA MONITOR” mode. Refer to EC-122.

Are they within the SP value?

Yes >> GO TO 9.
No >> GO TO 8.

8. DETECT MALFUNCTIONING PART BY TROUBLE DIAGNOSIS - SPECIFICATION VALUE

Detect malfunctioning part according to EC-123, "Diagnosis Procedure".

Is malfunctioning part detected?

Yes >> GO TO 11.
No >> GO TO 9.

9. DETECT MALFUNCTIONING SYSTEM BY SYMPTOM MATRIX CHART

Detect malfunctioning system according to EC-85, "Symptom Matrix Chart" based on the confirmed symptom in step 4, and determine the trouble diagnosis order based on possible causes and symptom.

>> GO TO 10.

10. DETECT MALFUNCTIONING PART BY DIAGNOSTIC PROCEDURE

Inspect according to Diagnostic Procedure of the system.

NOTE:

The Diagnostic Procedure in EC section described based on open circuit inspection. A short circuit inspection is also required for the circuit check in the Diagnostic Procedure. For details, refer to Circuit Inspection in GI-24, "How to Perform Efficient Diagnosis for an Electrical Incident".

Is malfunctioning part detected?

Yes >> GO TO 11.
No >> Monitor input data from related sensors or check voltage of related ECM terminals using CONSULT-III. Refer to EC-119, "CONSULT-III Reference Value in Data Monitor Mode", EC-99, "ECM Terminal and Reference Value".

11. REPAIR OR REPLACE THE MALFUNCTIONING PART

1. Repair or replace the malfunctioning part.
2. Reconnect parts or connectors disconnected during Diagnostic Procedure again after repair and replacement.
3. Check DTC. If DTC is displayed, erase it, refer to EC-43, "Emission-related Diagnostic Information".

>> GO TO 12.

12. FINAL CHECK

When DTC was detected in step 2, perform DTC Confirmation Procedure or Overall Function Check again, and then make sure that the malfunction have been repaired securely.

When symptom was described from the customer, refer to confirmed symptom in step 3 or 4, and make sure that the symptom is not detected.

OK or NG

NG (DTC*1 is detected)>>GO TO 10.
NG (Symptom remains)>>GO TO 6.
OK >> 1. Before returning the vehicle to the customer, make sure to erase unnecessary DTC*1 in ECM and TCM (Transmission Control Module). (Refer to EC-43, "Emission-related Diagnostic Information" and AT-36, "OBD-II Diagnostic Trouble Code (DTC)".)
2. If the completion of SRT is needed, drive vehicle under the specific driving pattern. Refer to EC-43, "Emission-related Diagnostic Information".
3. **INSPECTION END**

*1: Include 1st trip DTC.
*2: Include 1st trip freeze frame data.

DIAGNOSTIC WORKSHEET

Description

There are many operating conditions that lead to the malfunction of engine components. A good grasp of such conditions can make troubleshooting faster and more accurate.
In general, each customer feels differently about an incident. It is important to fully understand the symptoms or conditions for a customer complaint.
Utilize a diagnostic worksheet like the one on the next page in order to organize all the information for troubleshooting.
Some conditions may cause the MIL to come on steady or blink and DTC to be detected. Examples:

- Vehicle ran out of fuel, which caused the engine to misfire.
- Fuel filler cap was left off or incorrectly screwed on, allowing fuel to evaporate into the atmosphere.

KEY POINTS

WHAT ..... Vehicle & engine model
WHEN ..... Date, Frequencies
WHERE..... Road conditions
HOW ..... Operating conditions, Weather conditions, Symptoms

SEF907L

Worksheet Sample

Customer name MR/MS		Model & Year	VIN
Engine #		Trans.	Mileage
Incident Date		Manuf. Date	In Service Date
Fuel and fuel filler cap		☐ Vehicle ran out of fuel causing misfire ☐ Fuel filler cap was left off or incorrectly screwed on.	
Symptoms	☐ Startability	☐ Impossible to start ☐ No combustion ☐ Partial combustion ☐ Partial combustion affected by throttle position ☐ Partial combustion NOT affected by throttle position ☐ Possible but hard to start ☐ Others [ ]	
	☐ Idling	☐ No fast idle ☐ Unstable ☐ High idle ☐ Low idle ☐ Others [ ]	
	☐ Driveability	☐ Stumble ☐ Surge ☐ Knock ☐ Lack of power ☐ Intake backfire ☐ Exhaust backfire ☐ Others [ ]	
	☐ Engine stall	☐ At the time of start ☐ While idling ☐ While accelerating ☐ While decelerating ☐ Just after stopping ☐ While loading	
Incident occurrence		☐ Just after delivery ☐ Recently ☐ In the morning ☐ At night ☐ In the daytime	
Frequency		☐ All the time ☐ Under certain conditions ☐ Sometimes	
Weather conditions		☐ Not affected	
	Weather	☐ Fine ☐ Raining ☐ Snowing ☐ Others [ ]	
	Temperature	☐ Hot ☐ Warm ☐ Cool ☐ Cold ☐ Humid °F	
Engine conditions		☐ Cold ☐ During warm-up ☐ After warm-up Engine speed 0 2,000 4,000 6,000 8,000 rpm	
Road conditions		☐ In town ☐ In suburbs ☐ Highway ☐ Off road (up/down)	
Driving conditions		☐ Not affected ☐ At starting ☐ While idling ☐ At racing ☐ While accelerating ☐ While cruising ☐ While decelerating ☐ While turning (RH/LH) Vehicle speed 0 10 20 30 40 50 60 MPH	
Malfunction indicator lamp		☐ Turned on ☐ Not turned on	

MTBL0017

DTC Inspection Priority Chart

INFOID:0000000001717198

If some DTCs are displayed at the same time, perform inspections one by one based on the following priority chart.
NOTE:

- **If DTC U1000 and/or U1001 is displayed with other DTC, first perform the trouble diagnosis for DTC U1000, U1001. Refer to EC-139.**
- **If DTC U1010 is displayed with other DTC, first perform the trouble diagnosis for DTC U1010. Refer to EC-141.**

Priority	Detected items (DTC)
1	• U1000 U1001 CAN communication line • U1010 CAN communication • P0101 P0102 P0103 Mass air flow sensor • P0112 P0113 P0127 Intake air temperature sensor • P0117 P0118 P0125 Engine coolant temperature sensor • P0122 P0123 P0222 P0223 P1225 P1226 P2135 Throttle position sensor • P0128 Thermostat function • P0181 P0182 P0183 Fuel tank temperature sensor • P0327 P0328 Knock sensor • P0335 Crankshaft position sensor (POS) • P0340 P0345 Camshaft position sensor (PHASE) • P0403 EGR volume control valve • P0460 P0461 P0462 P0463 Fuel level sensor • P0500 Vehicle speed sensor • P0605 ECM • P0643 Sensor power supply • P0705 P0850 Park/Neutral position (PNP) switch • P1610 - P1615 NATS • P2122 P2123 P2127 P2128 P2138 Accelerator pedal position sensor
2	• P0031 P0032 P0051 P0052 Air fuel ratio (A/F) sensor 1 heater • P0037 P0038 P0057 P0058 Heated oxygen sensor 2 heater • P0075 P0081 Intake valve timing control solenoid valve • P0130 P0131 P0132 P0133 P0150 P0151 P0152 P0153 P2A00 P2A03 Air fuel ratio (A/F) sensor 1 • P0137 P0138 P0139 P0157 P0158 P0159 Heated oxygen sensor 2 • P0405 P0406 EGR temperature sensor • P0441 EVAP control system purge flow monitoring • P0443 P0444 P0445 EVAP canister purge volume control solenoid valve • P0447 P0448 EVAP canister vent control valve • P0451 P0452 P0453 EVAP control system pressure sensor • P0550 Power steering pressure sensor • P0603 ECM power supply • P1217 Engine over temperature (OVERHEAT) • P1800 VIAS control solenoid valve • P1805 Brake switch • P2100 P2103 Throttle control motor relay • P2101 Electric throttle control function • P2118 Throttle control motor
3	• P0011 P0021 Intake valve timing control • P0171 P0172 P0174 P0175 Fuel injection system function • P0300 - P0306 Misfire • P0400 P1402 EGR system • P0420 P0430 Three way catalyst function • P0442 P0456 EVAP control system (SMALL LEAK, VERY SMALL LEAK) • P0455 EVAP control system (GROSS LEAK) • P0506 P0507 Idle speed control system • P0710 P0711 P0717 P0722 P0731 P0732 P0733 P0734 P0735 P0744 P0745 P0750 P0755 P0760 P0762 P0765 P0770 P0775 P0780 P0795 P0797 P0882 A/T related sensors, solenoid valves and switches • P1148 P1168 Closed loop control • P1211 TCS control unit • P1212 TCS communication line • P1421 Cold start control • P1564 ASCD steering switch • P1572 ASCD brake switch • P1574 ASCD vehicle speed sensor • P2119 Electric throttle control actuator

Fail-Safe Chart

INFOID:0000000001717199

When the DTC listed below is detected, the ECM enters fail-safe mode and the MIL lights up.

DTC No.	Detected items	Engine operating condition in fail-safe mode	
P0102 P0103	Mass air flow sensor circuit	Engine speed will not rise more than 2,400 rpm due to the fuel cut.	
P0117 P0118	Engine coolant temperature sensor circuit	Engine coolant temperature will be determined by ECM based on the following condition. CONSULT-III displays the engine coolant temperature decided by ECM.	
		Condition	Engine coolant temperature decided (CONSULT-III display)
		Just as ignition switch is turned ON or START	40°C (104°F)
		Approx. 4 minutes or more after engine starting.	80°C (176°F)
		Except as shown above	40 - 80°C (104 - 176°F) (Depends on the time)
		When the fail-safe system for engine coolant temperature sensor is activated, the cooling fan operates while engine is running.	
P0122 P0123 P0222 P0223 P2135	Throttle position sensor	The ECM controls the electric throttle control actuator in regulating the throttle opening in order for the idle position to be within +10 degrees. The ECM regulates the opening speed of the throttle valve to be slower than the normal condition. So, the acceleration will be poor.	
P0643	Sensor power supply	ECM stops the electric throttle control actuator control, throttle valve is maintained at a fixed opening (approx. 5 degrees) by the return spring.	
P2100 P2103	Throttle control motor relay	ECM stops the electric throttle control actuator control, throttle valve is maintained at a fixed opening (approx. 5 degrees) by the return spring.	
P2101	Electric throttle control function	ECM stops the electric throttle control actuator control, throttle valve is maintained at a fixed opening (approx. 5 degrees) by the return spring.	
P2118	Throttle control motor	ECM stops the electric throttle control actuator control, throttle valve is maintained at a fixed opening (approx. 5 degrees) by the return spring.	
P2119	Electric throttle control actuator	(When electric throttle control actuator does not function properly due to the return spring malfunction:) ECM controls the electric throttle actuator by regulating the throttle opening around the idle position. The engine speed will not rise more than 2,000 rpm.	
		(When ECM detects the throttle valve is stuck open:) While the vehicle is driving, it slows down gradually by fuel cut. After the vehicle stops, the engine stalls. The engine can restart in N or P position, and engine speed will not exceed 1,000 rpm or more.	
		(When throttle valve opening angle in fail-safe mode is not in specified range:) ECM controls the electric throttle control actuator by regulating the throttle opening to 20 degrees or less.	
P2122 P2123 P2127 P2128 P2138	Accelerator pedal position sensor	The ECM controls the electric throttle control actuator in regulating the throttle opening in order for the idle position to be within +10 degrees. The ECM regulates the opening speed of the throttle valve to be slower than the normal condition. So, the acceleration will be poor.	

- When there is an open circuit on MIL circuit, the ECM cannot warn the driver by lighting up MIL when there is malfunction on engine control system.
  Therefore, when electrical controlled throttle and part of ECM related diagnoses are continuously detected as NG for 5 trips, ECM warns the driver that engine control system malfunctions and MIL circuit is open by means of operating fail-safe function.
  The fail-safe function also operates when above diagnoses except MIL circuit are detected, and demands the driver to repair the malfunction.

Engine operating condition in fail-safe mode	Engine speed will not rise more than 2,500 rpm due to the fuel cut

Symptom Matrix Chart

INFOID:0000000001717200

SYSTEM — BASIC ENGINE CONTROL SYSTEM

		SYMPTOM													Reference page
		HARD/NO START/RESTART (EXCP. HA)	ENGINE STALL	HESITATION/SURGING/FLAT SPOT	SPARK KNOCK/DETONATION	LACK OF POWER/POOR ACCELERATION	HIGH IDLE/LOW IDLE	ROUGH IDLE/HUNTING	IDLING VIBRATION	SLOW/NO RETURN TO IDLE	OVERHEATS/WATER TEMPERATURE HIGH	EXCESSIVE FUEL CONSUMPTION	EXCESSIVE OIL CONSUMPTION	BATTERY DEAD (UNDER CHARGE)	
Warranty symptom code		AA	AB	AC	AD	AE	AF	AG	AH	AJ	AK	AL	AM	HA	
Fuel	Fuel pump circuit	1	1	2	3	2		2	2			3		2	EC-585
	Fuel pressure regulator system	3	3	4	4	4	4	4	4	4		4			EC-75
	Fuel injector circuit	1	1	2	3	2		2	2			2			EC-579
	Evaporative emission system	3	3	4	4	4	4	4	4	4		4			EC-28
Air	Positive crankcase ventilation system	3	3	4	4	4	4	4	4	4		4	1		EC-39
	Incorrect idle speed adjustment						1	1	1	1		1			EC-68
	Electric throttle control actuator	1	1	2	3	3	2	2	2	2		2		2	EC-514, EC-526
Ignition	Incorrect ignition timing adjustment	3	3	1	1	1		1	1			1			EC-68
	Ignition circuit	1	1	2	2	2		2	2			2			EC-591
EGR	EGR volume control valve circuit		2	2	3	3	3	2	2	3		3			EC-341
	EGR system	2	1												EC-333, EC-477
Main power supply and ground circuit		2	2	3	3	3		3	3		2	3			EC-131
Mass air flow sensor circuit		1	1	2	2	2		2	2			2			EC-168, EC-177
Engine coolant temperature sensor circuit					3		3			3					EC-188, EC-199
A/F sensor 1 circuit															EC-146, EC-207, EC-216, EC-224, EC-232, EC-554
Throttle position sensor circuit							2			2					EC-193, EC-301, EC-473, EC-475, EC-540
Accelerator pedal position sensor circuit				3	2	1									EC-449, EC-528, EC-534, EC-546

	SYMPTOM													Reference page
	HARD/NO START/RESTART (EXCP. HA)	ENGINE STALL	HESITATION/SURGING/FLAT SPOT	SPARK KNOCK/DETONATION	LACK OF POWER/POOR ACCELERATION	HIGH IDLE/LOW IDLE	ROUGH IDLE/HUNTING	IDLING VIBRATION	SLOW/NO RETURN TO IDLE	OVERHEATS/WATER TEMPERATURE HIGH	EXCESSIVE FUEL CONSUMPTION	EXCESSIVE OIL CONSUMPTION	BATTERY DEAD (UNDER CHARGE)	
Warranty symptom code	AA	AB	AC	AD	AE	AF	AG	AH	AJ	AK	AL	AM	HA	
Knock sensor circuit			2								3			EC-314
Crankshaft position sensor (POS) circuit	2	2												EC-319
Camshaft position sensor (PHASE) circuit	3	2												EC-325
Vehicle speed signal circuit		2	3		3						3			EC-432
Power steering pressure sensor circuit		2					3	3						EC-438
ECM	2	2	3	3	3	3	3	3	3	3	3			EC-443, EC-447
Intake valve timing control solenoid valve circuit		3	2		1	3	2	2	3		3			EC-161
PNP switch circuit			3		3		3	3			3			EC-454
VIAS control solenoid valve circuit					1									EC-501
Refrigerant pressure sensor circuit		2				3			3		4			EC-603
Electrical load signal circuit							3							EC-573
Air conditioner circuit	2	2	3	3	3	3	3	3	3		3		2	ATC-28 or MTC-27
ABS actuator and electric unit (control unit)			4											BRC-10 or BRC-50

1 - 6: The numbers refer to the order of inspection.

(continued on next page)

SYSTEM — ENGINE MECHANICAL & OTHER

		SYMPTOM													Reference page
		HARD/NO START/RESTART (EXCP. HA)	ENGINE STALL	HESITATION/SURGING/FLAT SPOT	SPARK KNOCK/DETONATION	LACK OF POWER/POOR ACCELERATION	HIGH IDLE/LOW IDLE	ROUGH IDLE/HUNTING	IDLING VIBRATION	SLOW/NO RETURN TO IDLE	OVERHEATS/WATER TEMPERATURE HIGH	EXCESSIVE FUEL CONSUMPTION	EXCESSIVE OIL CONSUMPTION	BATTERY DEAD (UNDER CHARGE)	
Warranty symptom code		AA	AB	AC	AD	AE	AF	AG	AH	AJ	AK	AL	AM	HA	
Fuel	Fuel tank	5	5												FL-9
	Fuel piping			5	5	5		5	5			5			EM-38
	Vapor lock														—
	Valve deposit	5		5	5	5		5	5			5			—
	Poor fuel (Heavy weight gasoline, Low octane)														—
Air	Air duct		5	5		5		5	5			5			EM-15
	Air cleaner														EM-15
	Air leakage from air duct (Mass air flow sensor — electric throttle control actuator)	5			5		5			5					EM-15
	Electric throttle control actuator														EM-17
	Air leakage from intake manifold/ Collector/Gasket														EM-17, EM-23
Cranking	Battery	1	1	1		1		1	1			1		1	SC-4
	Generator circuit														SC-17
	Starter circuit	3													SC-10
	Signal plate	6													EM-116
	PNP switch	4													AT-83
Engine	Cylinder head	5	5	5	5	5		5	5			5			EM-94
	Cylinder head gasket										4		3		
	Cylinder block	6	6	6	6	6		6	6			6	4		EM-116
	Piston														
	Piston ring														
	Connecting rod														
	Bearing														
	Crankshaft														
Valve mecha-nism	Timing chain	5	5	5	5	5		5	5			5			EM-54
	Camshaft														EM-54
	Intake valve timing control														EM-54
	Intake valve												3		EM-94
	Exhaust valve														

		SYMPTOM													Reference page
		HARD/NO START/RESTART (EXCP. HA)	ENGINE STALL	HESITATION/SURGING/FLAT SPOT	SPARK KNOCK/DETONATION	LACK OF POWER/POOR ACCELERATION	HIGH IDLE/LOW IDLE	ROUGH IDLE/HUNTING	IDLING VIBRATION	SLOW/NO RETURN TO IDLE	OVERHEATS/WATER TEMPERATURE HIGH	EXCESSIVE FUEL CONSUMPTION	EXCESSIVE OIL CONSUMPTION	BATTERY DEAD (UNDER CHARGE)	
Warranty symptom code		AA	AB	AC	AD	AE	AF	AG	AH	AJ	AK	AL	AM	HA	
Exhaust	Exhaust manifold/Tube/Muffler/Gasket	5	5	5	5	5		5	5			5			EM-25, EX-4
	Three way catalyst														
Lubrica-tion	Oil pan/Oil strainer/Oil pump/Oil filter/Oil gallery/Oil cooler	5	5	5	5	5		5	5			5			EM-29, LU-10, LU-12, LU-16
	Oil level (Low)/Filthy oil														LU-8
Cooling	Radiator/Hose/Radiator filler cap	5	5	5	5	5		5	5		4	5			CO-16
	Thermostat									5					CO-24
	Water pump														CO-19
	Water gallery														CO-26
	Cooling fan									5					EC-463
	Coolant level (Low)/Contaminat-ed coolant														CO-10
NVIS (NISSAN Vehicle Immobilizer System — NATS)		1	1												BL-180

1 - 6: The numbers refer to the order of inspection.

Engine Control Component Parts Location

INFOID:0000000001717201

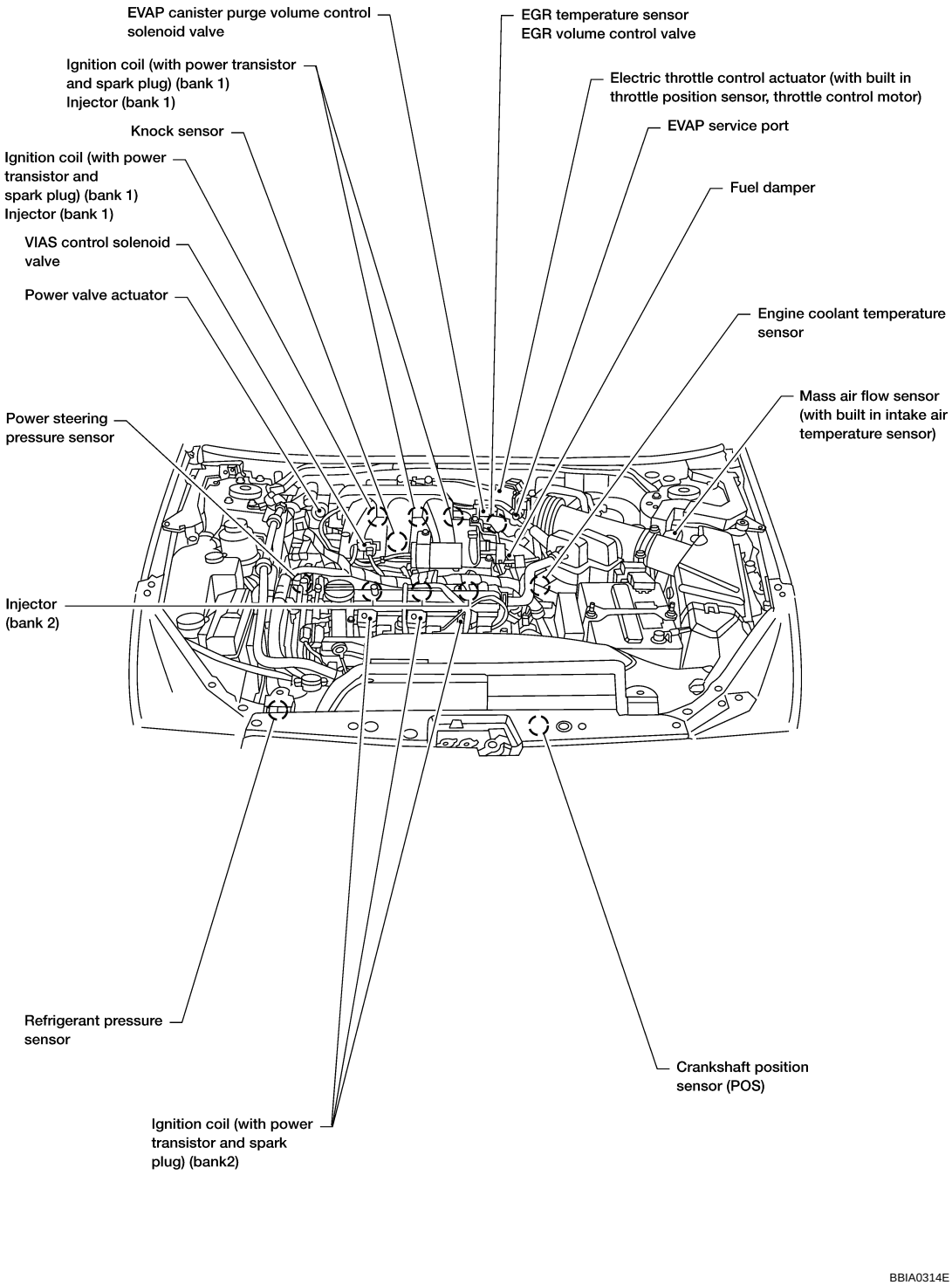

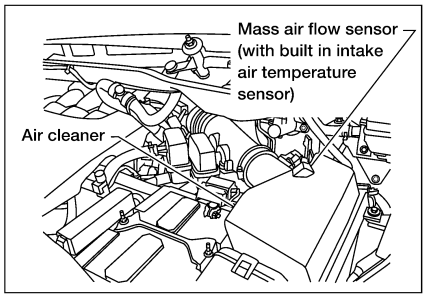
Mass air flow sensor (with built in intake air temperature sensor)
Air cleaner

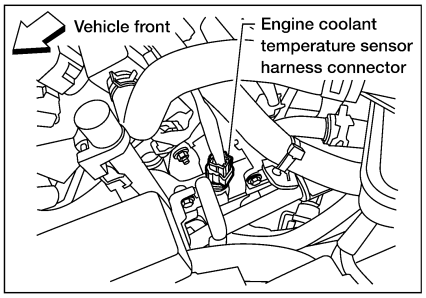
Vehicle front
Engine coolant temperature sensor harness connector

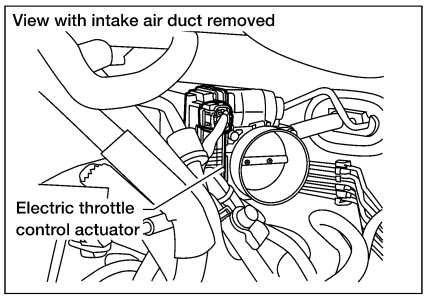
View with intake air duct removed
Electric throttle control actuator

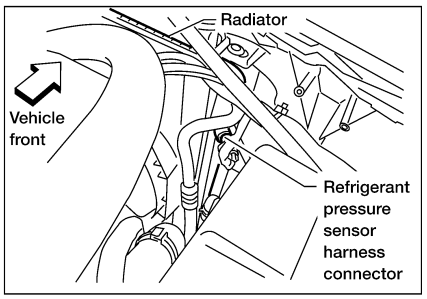
Radiator
Vehicle front
Refrigerant pressure sensor harness connector

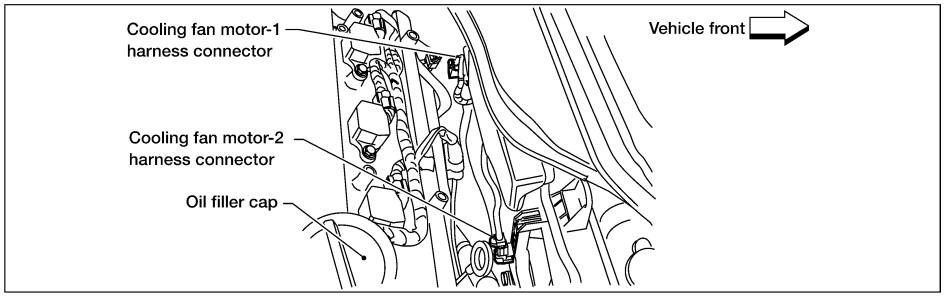
Cooling fan motor-1 harness connector
Vehicle front
Cooling fan motor-2 harness connector
Oil filler cap

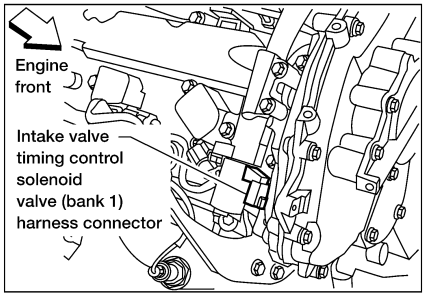
Engine front
Intake valve timing control solenoid valve (bank 1) harness connector

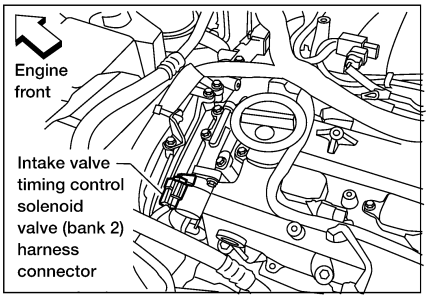
Engine front
Intake valve timing control solenoid valve (bank 2) harness connector

BBIA0321E

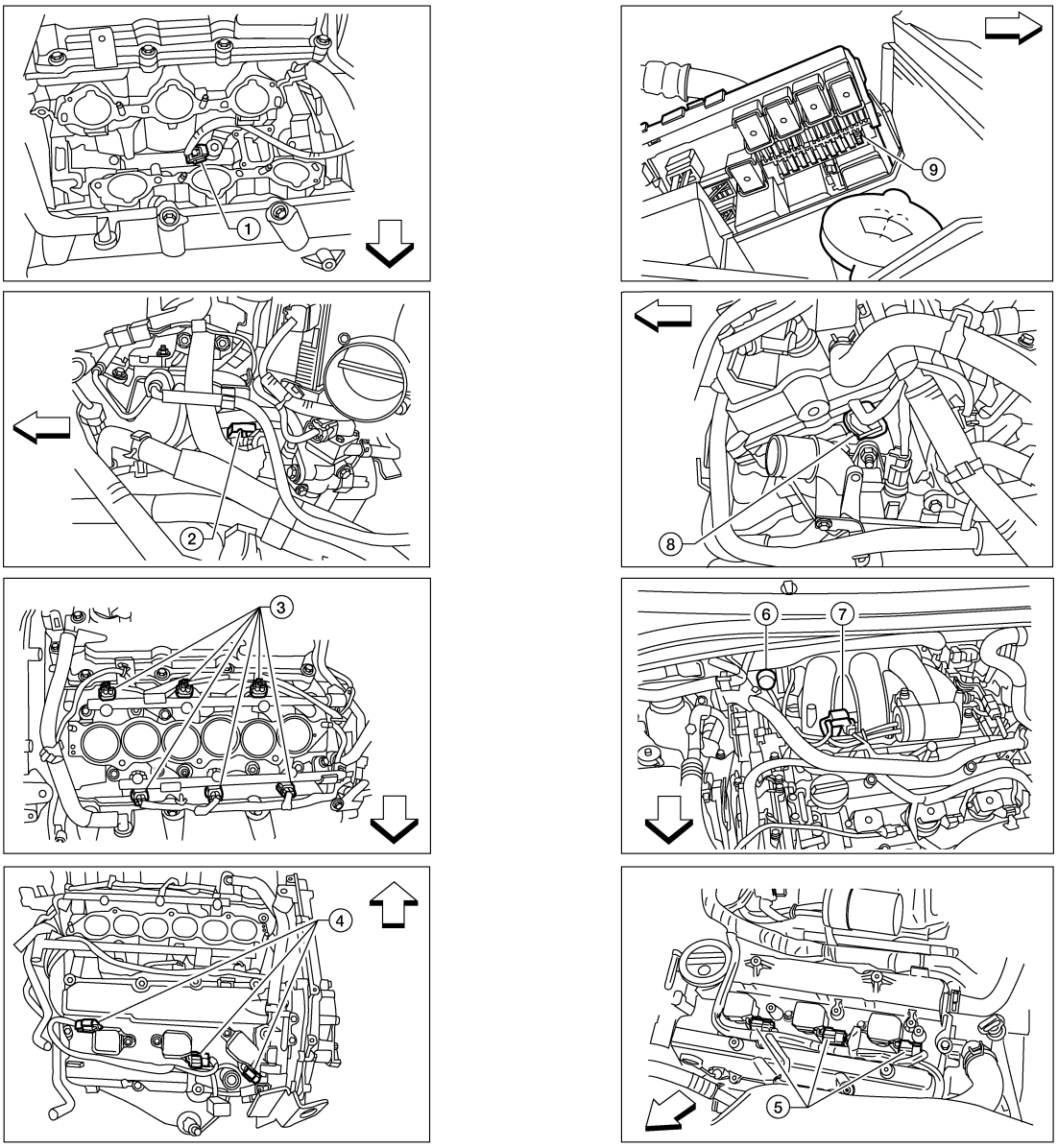

BBIA0652E

⇦: Vehicle front

1.	Knock sensor harness connector	2.	Camshaft position sensor (PHASE) (bank 1) harness connector	3.	Fuel injector harness connector
4.	Ignition coil harness connector (bank 1)	5.	Ignition coil harness connector (bank 2)	6.	Power valve actuator
7.	VIAS control solenoid valve	8.	Camshaft position sensor (PHASE) (bank 2) harness connector	9.	Fuel pump fuse (15A)

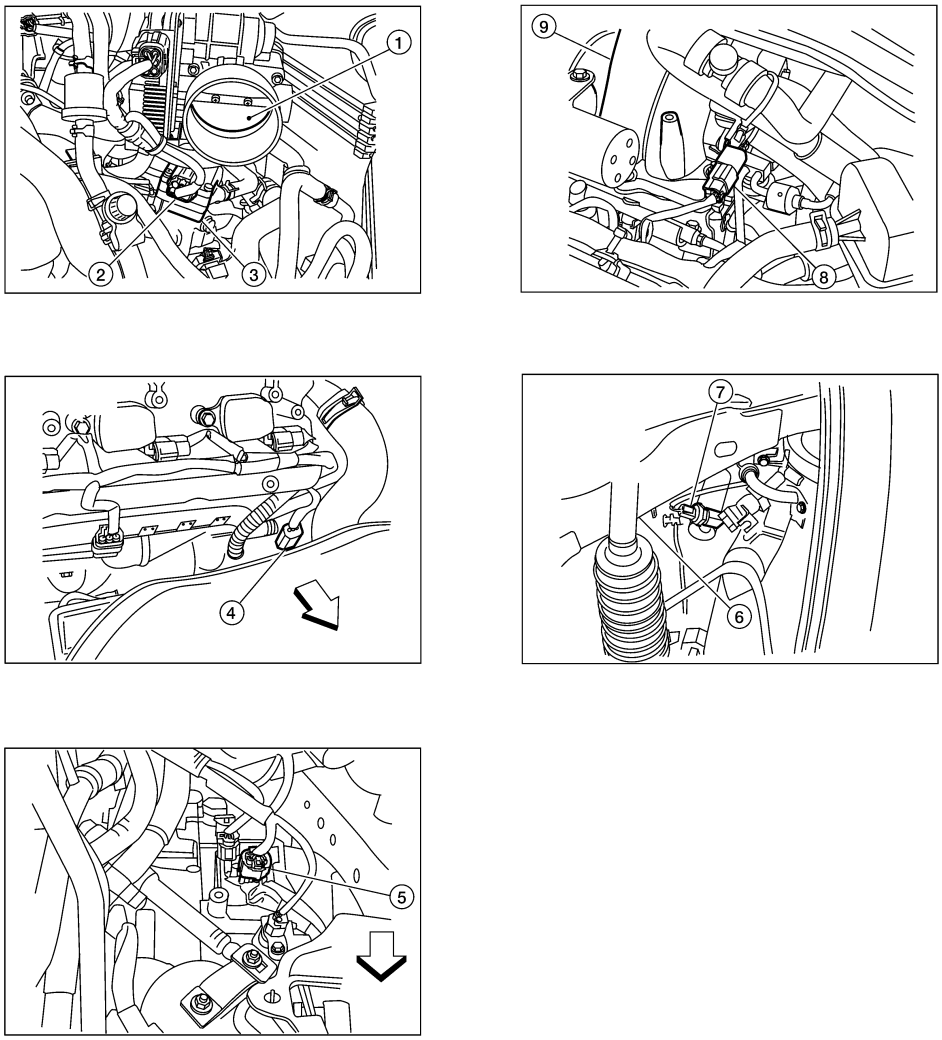

BBIA0682E

⇦: Vehicle front

1.	Throttle valve (view with intake air duct removed)	2.	EGR volume control valve harness connector	3.	EGR volume control valve
4.	Electronic controlled engine mount-1 harness connector	5.	Park/neutral position switch harness connector (view with battery tray removed)	6.	Tie rod RH (view from under vehicle)
7.	Power steering pressure sensor harness connector	8.	EGR temperature sensor harness connector (view with engine cover removed)	9.	Intake manifold collector

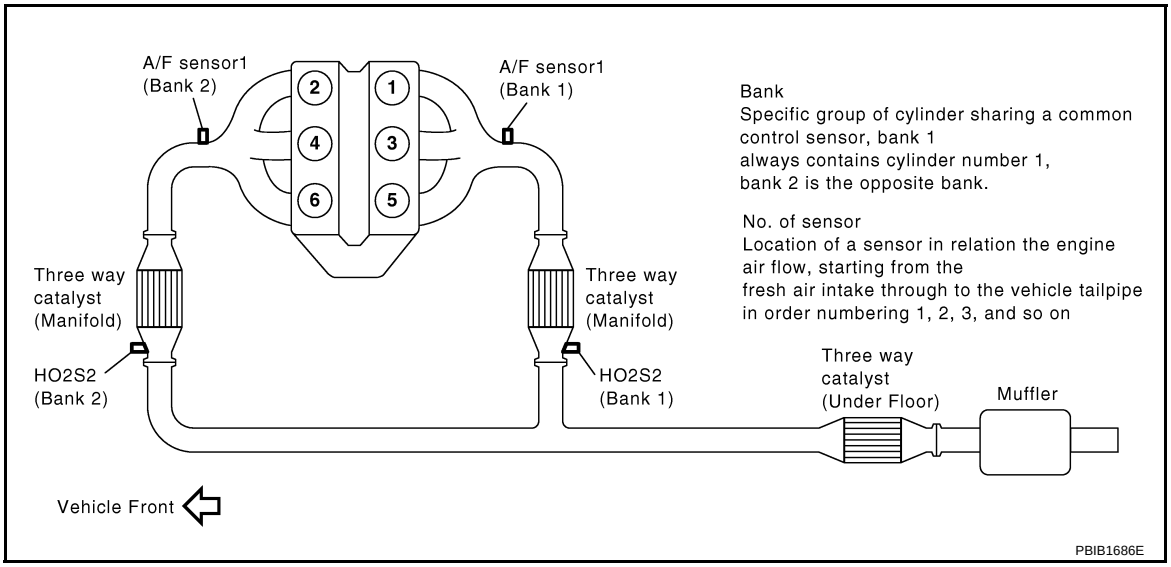

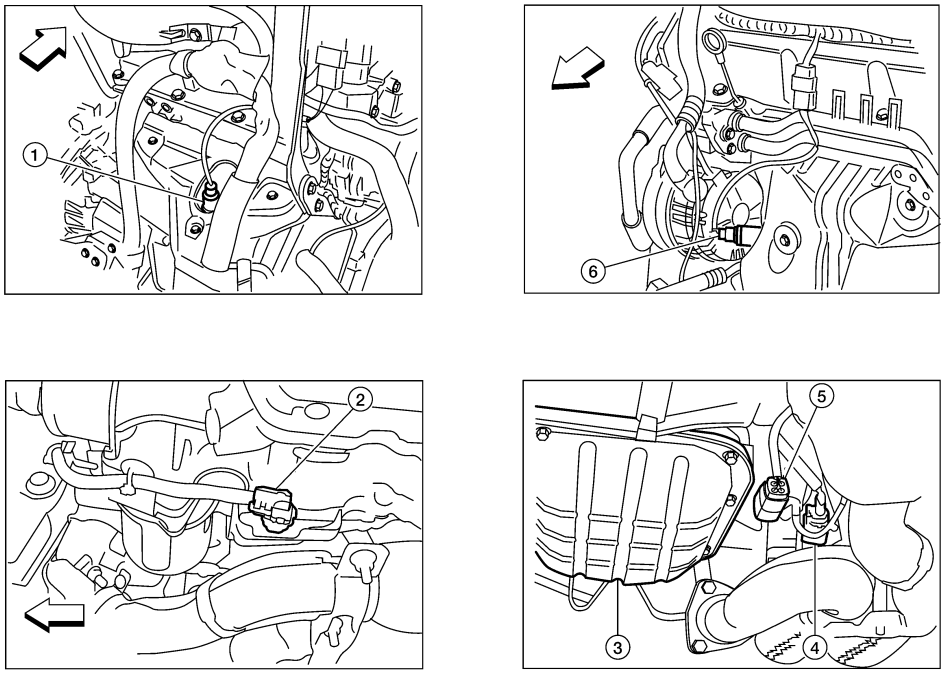

⇦: Vehicle front

1. Air fuel ratio sensor 1 (bank 1)
2. Crankshaft position sensor (POS) (view from under the vehicle)
3. Oil pan (view from under the vehicle)
4. Heated oxygen sensor 2 (bank 2) harness connector
5. Heated oxygen sensor 2 (bank 1) harness connector
6. Air fuel ratio sensor 1 (bank 2)

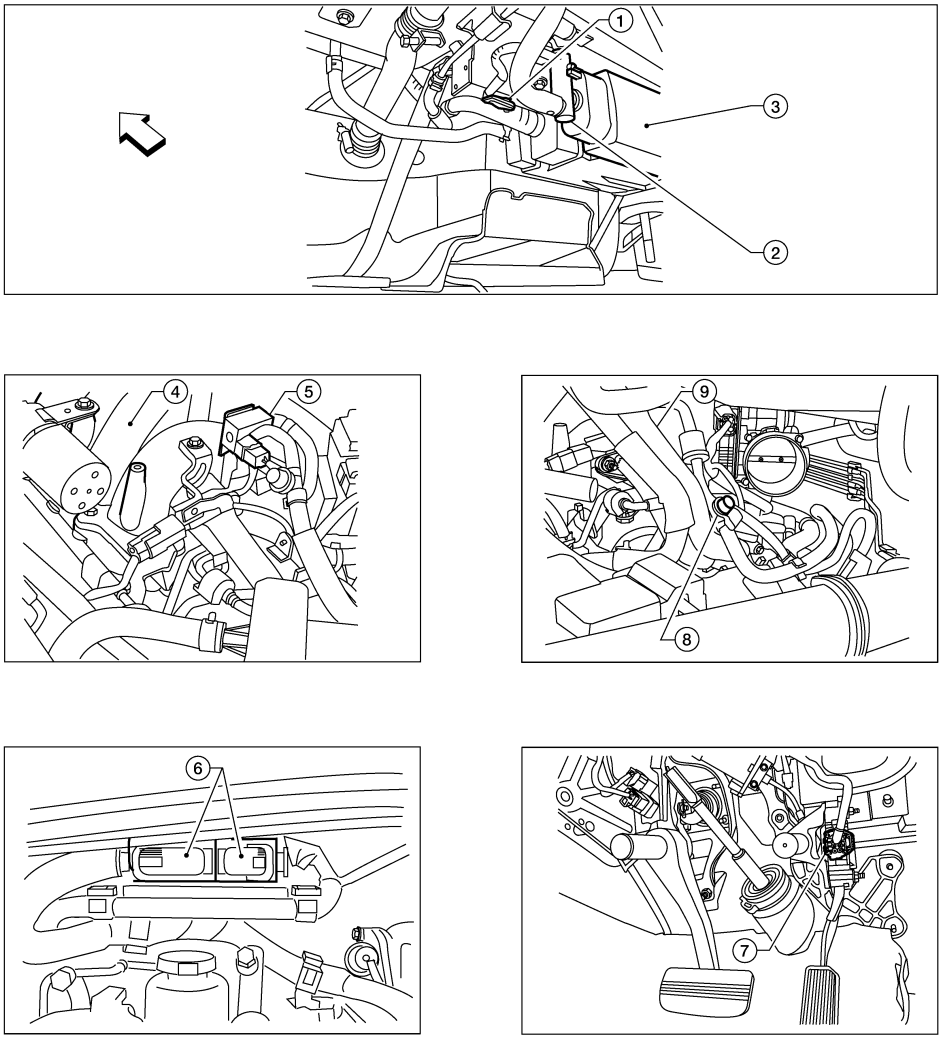

BBIA0665E

⇦: Vehicle front

1.	EVAP control system pressure sensor	2.	EVAP canister vent control valve	3.	EVAP canister
4.	Intake manifold collector	5.	EVAP canister purge volume control solenoid valve	6.	ECM harness connector
7.	Accelerator pedal position (APP) sensor harness connector	8.	EVAP service port	9.	Intake manifold collector

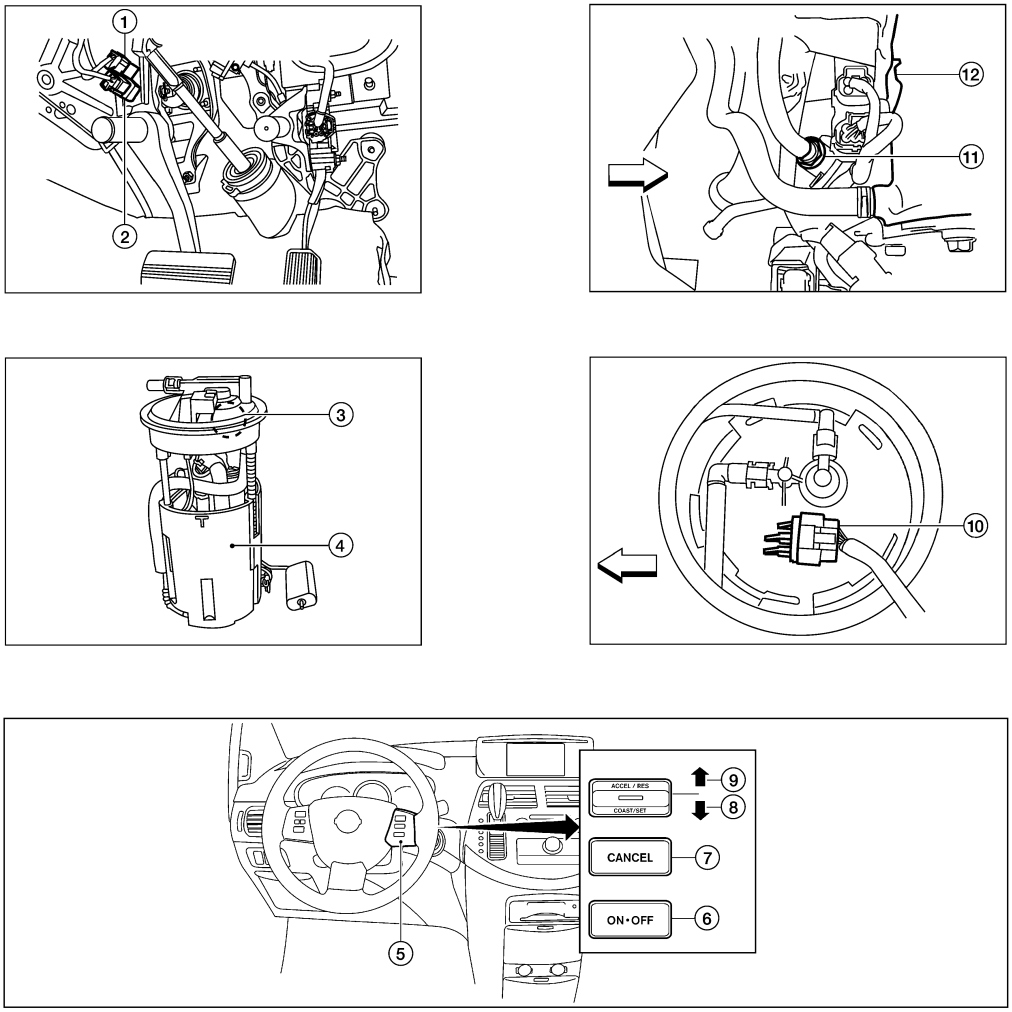

BBIA0684E

⇦: Vehicle front

1.	ASCD brake switch	2.	Stop lamp switch	3.	Fuel pressure regulator
4.	Fuel pump, fuel level sensor unit and fuel filler	5.	ASCD steering switch	6.	MAIN switch
7.	CANCEL switch	8.	SET/COAST switch	9.	RESUME/ACCELERATE switch
10.	Fuel level sensor unit and fuel pump harness connector (view with fuel tank removed)	11.	PCV valve (view with cowl removed)	12.	Intake manifold collector

Vacuum Hose Drawing

INFOID:0000000001717202

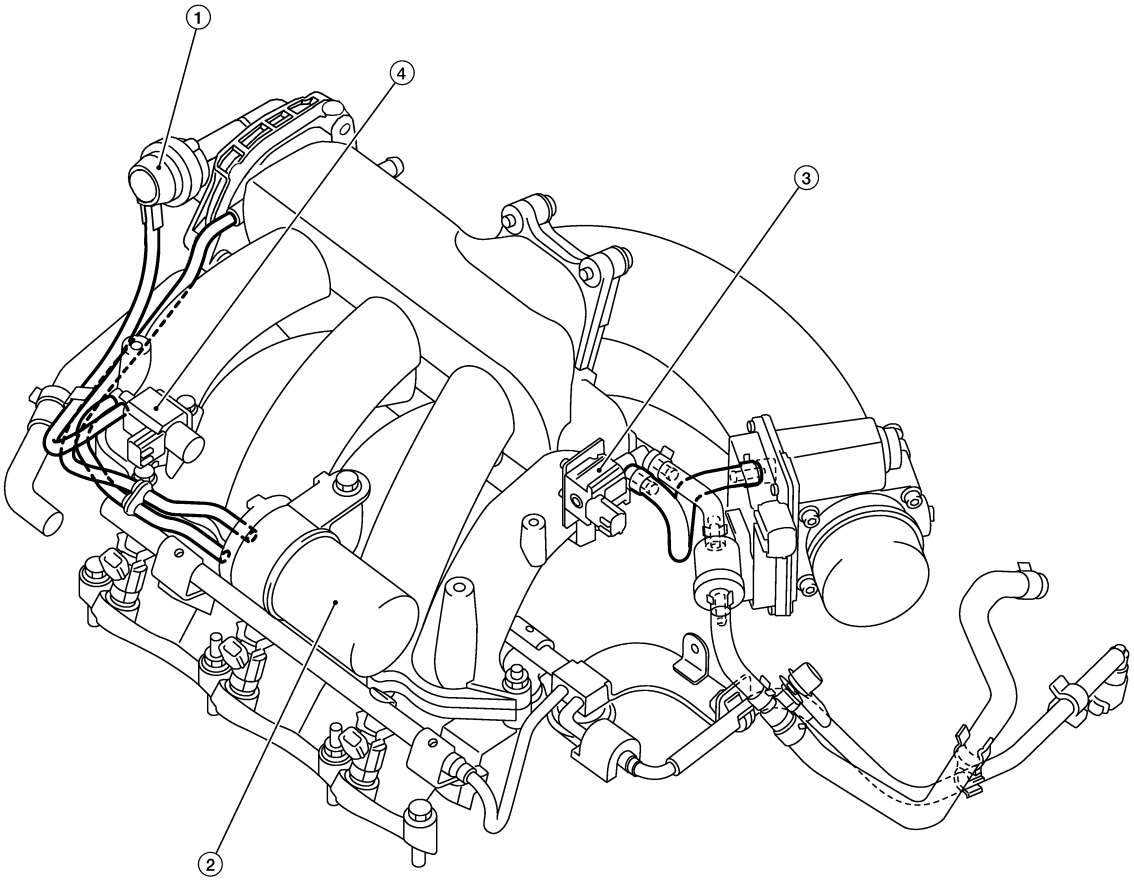

BBIA0663E

1. Power valve actuator
2. Vacuum tank
3. EVAP canister purge volume control solenoid valve
4. VIAS control solenoid valve

NOTE:
Do not use soapy water or any type of solvent while installing vacuum hose or purge hoses.

Refer to EC-19, "Schematic" for Vacuum Control System.

Circuit Diagram

INFOID:0000000001717203

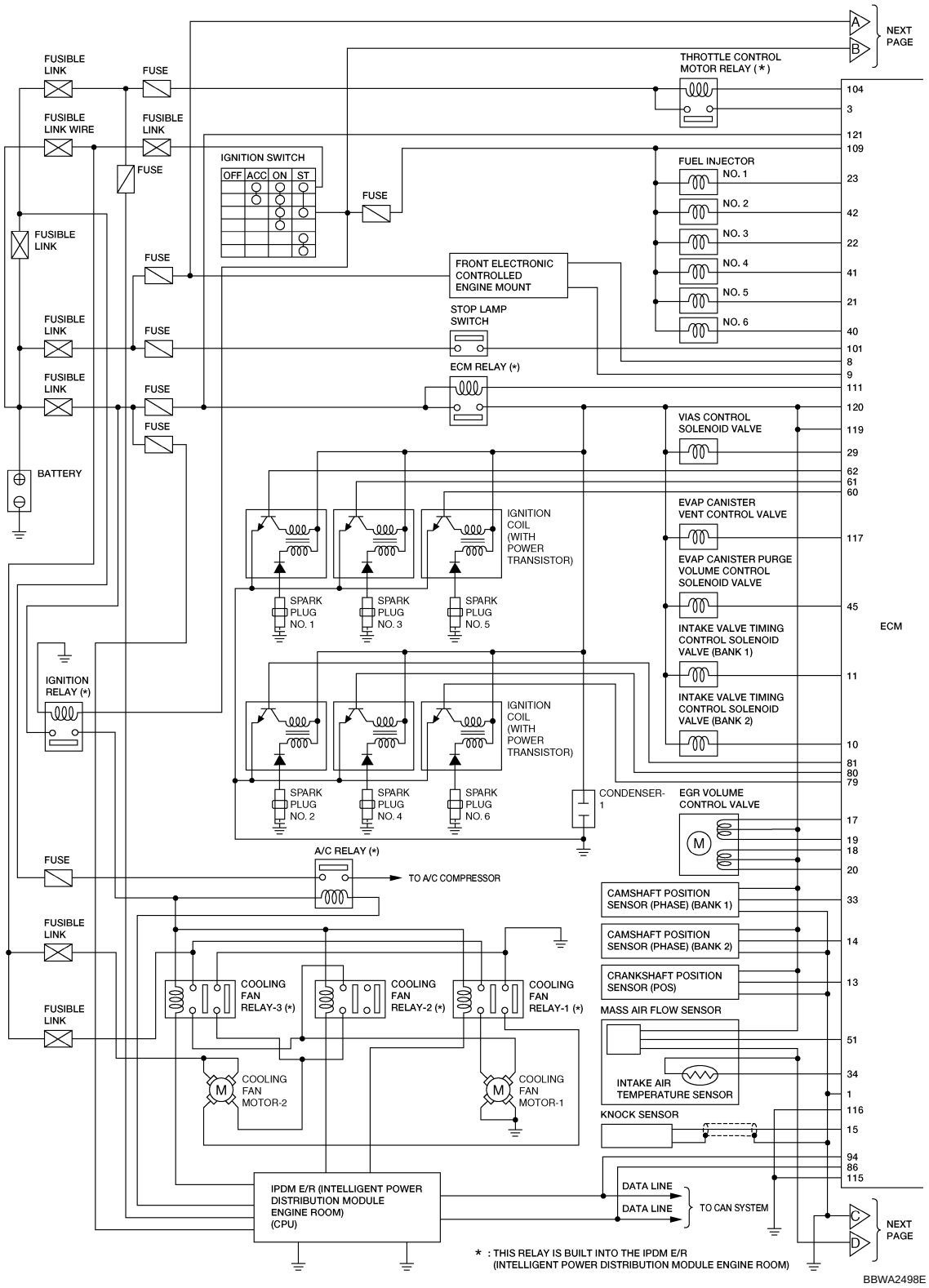

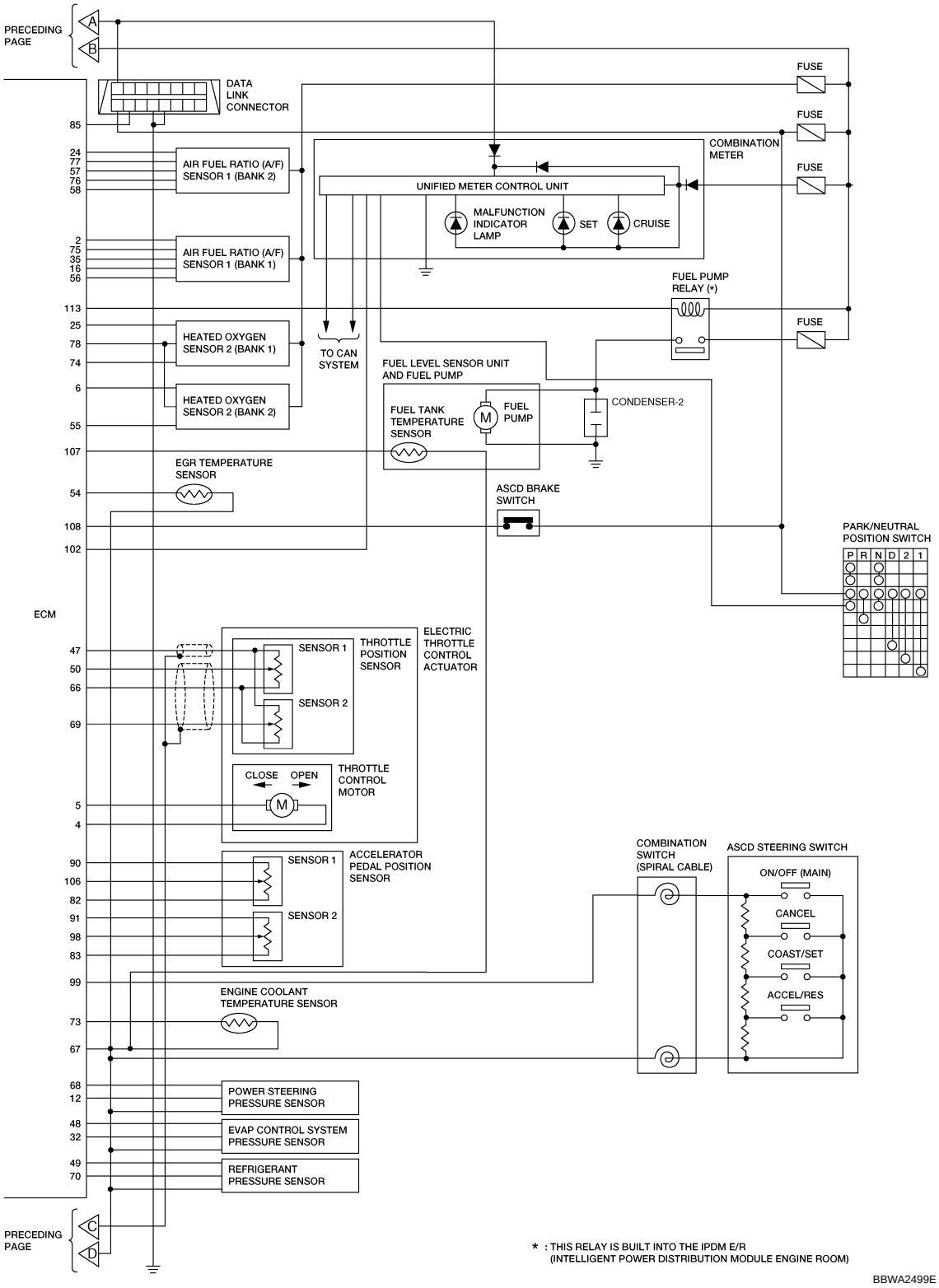
PRECEDING PAGE
A
B
DATA LINK CONNECTOR
FUSE
FUSE
FUSE
FUSE
85
24
77
57
76
58
AIR FUEL RATIO (A/F) SENSOR 1 (BANK 2)
COMBINATION METER
UNIFIED METER CONTROL UNIT
MALFUNCTION INDICATOR LAMP
SET
CRUISE
2
75
35
16
56
AIR FUEL RATIO (A/F) SENSOR 1 (BANK 1)
FUEL PUMP RELAY (*)
113
25
78
74
HEATED OXYGEN SENSOR 2 (BANK 1)
TO CAN SYSTEM
FUEL LEVEL SENSOR UNIT AND FUEL PUMP
6
55
HEATED OXYGEN SENSOR 2 (BANK 2)
FUEL TANK TEMPERATURE SENSOR
FUEL PUMP
CONDENSER-2
107
EGR TEMPERATURE SENSOR
54
ASCD BRAKE SWITCH
108
102
PARK/NEUTRAL POSITION SWITCH
P R N D 2 1
ECM
47
50
66
69
SENSOR 1
SENSOR 2
THROTTLE POSITION SENSOR
ELECTRIC THROTTLE CONTROL ACTUATOR
CLOSE
OPEN
THROTTLE CONTROL MOTOR
5
4
90
106
82
91
98
83
SENSOR 1
SENSOR 2
ACCELERATOR PEDAL POSITION SENSOR
COMBINATION SWITCH (SPIRAL CABLE)
ASCD STEERING SWITCH
ON/OFF (MAIN)
CANCEL
COAST/SET
ACCEL/RES
99
ENGINE COOLANT TEMPERATURE SENSOR
73
67
68
12
POWER STEERING PRESSURE SENSOR
48
32
EVAP CONTROL SYSTEM PRESSURE SENSOR
49
70
REFRIGERANT PRESSURE SENSOR
PRECEDING PAGE
C
D
* : THIS RELAY IS BUILT INTO THE IPDM E/R
(INTELLIGENT POWER DISTRIBUTION MODULE ENGINE ROOM)
BBWA2499E

ECM Harness Connector Terminal Layout

INFOID:0000000001717204

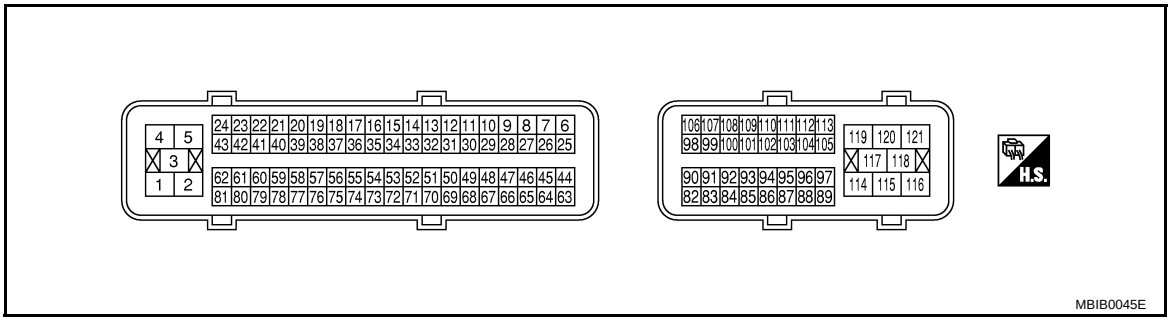

ECM Terminal and Reference Value

INFOID:0000000001717205

PREPARATION

ECM is located in the right side of the cowl top (behind the strut tower).

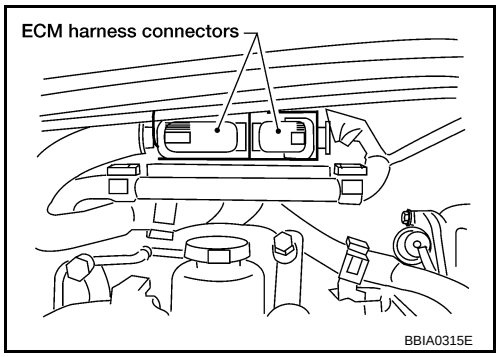

ECM INSPECTION TABLE

Specification data are reference values and are measured between each terminal and ground.
Pulse signal is measured by CONSULT-III.

CAUTION:

Do not use ECM ground terminals when measuring input/output voltage. Doing so may result in damage to the ECMs transistor. Use a ground other than ECM terminals, such as the ground.

TERMINAL NO.	WIRE COLOR	ITEM	CONDITION	DATA (DC Voltage)
1	B	ECM ground	**[Engine is running]** • Idle speed	Body ground
2	R/G	A/F sensor 1 heater (Bank 1)	**[Engine is running]** • **Warm-up condition** • Idle speed	Approximately 5V★ 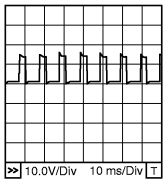 PBIB1584E
3	R	Throttle control motor relay power supply	**[Ignition switch: ON]**	BATTERY VOLTAGE (11 - 14V)
4	O/L	Throttle control motor (Close)	**[Ignition switch: ON]** • Engine stopped • Shift lever: D • Accelerator pedal: Fully released	0 - 14V★ 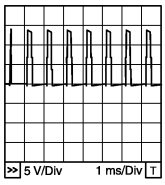 PBIB1104E

TER-MI-NAL NO.	WIRE COLOR	ITEM	CONDITION	DATA (DC Voltage)
5	W/L	Throttle control motor (Open)	**[Ignition switch: ON]** • Engine stopped • Shift lever: D • Accelerator pedal: Fully depressed	0 - 14V★ 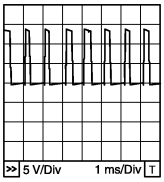 PBIB1105E
6	GR	Heated oxygen sensor 2 heater (Bank 2)	**[Engine is running]** • Engine speed: Below 3,600 rpm after the following conditions are met - Engine: After warming up - Keeping the engine speed between 3,500 and 4,000 rpm for 1 minute and at idle for 1 minute under no load.	0 - 1.0V
			[Ignition switch: ON] • Engine stopped **[Engine is running]** • Engine speed: Above 3,600 rpm	BATTERY VOLTAGE (11 - 14V)
8	W	Electronic controlled engine mount-1	**[Engine is running]** • Engine speed: Above 950 rpm	BATTERY VOLTAGE (11 - 14V)
			[Engine is running] • For 2 seconds after engine speed: 950 rpm or less	0 - 1.0V
			[Engine is running] • 2 seconds after engine speed: 950 rpm or less	2.0 - 3.0V
9	W/R	Electronic controlled engine mount-2	**[Engine is running]** • Engine speed: Below 950 rpm	BATTERY VOLTAGE (11 - 14V)
			[Engine is running] • For 2 seconds after engine speed: 950 rpm or more	0 - 1.0V
			[Engine is running] • 2 seconds after engine speed: 950 rpm or more	2.0 - 3.0V
10	Y/L	Intake valve timing control solenoid valve (Bank 2)	**[Engine is running]** • **Warm-up condition** • Idle speed	BATTERY VOLTAGE (11 - 14V)
			[Engine is running] • **Warm-up condition** • Engine speed: 2,000 rpm	7 - 12V★ 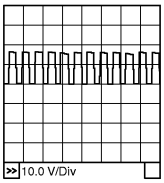 PBIB1790E

TER-MI-NAL NO.	WIRE COLOR	ITEM	CONDITION	DATA (DC Voltage)
11	R/L	Intake valve timing control solenoid valve (Bank 1)	**[Engine is running]** • **Warm-up condition** • Idle speed	BATTERY VOLTAGE (11 - 14V)
			[Engine is running] • **Warm-up condition** • Engine speed: 2,000 rpm	7 - 12V★ 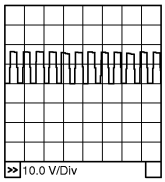 PBIB1790E
12	W	Power steering pressure sensor	**[Engine is running]** • Steering wheel: Being turned	0.5 - 4.5V
			[Engine is running] • Steering wheel: Not being turned	0.4 - 0.8V
13	W	Crankshaft position sensor (POS)	**[Engine is running]** • **Warm-up condition** • Idle speed **NOTE:** The pulse cycle changes depending on rpm at idle	Approximately 10V★ 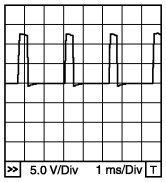 PBIB1041E
			[Engine is running] • Engine speed: 2,000 rpm	Approximately 10V★ 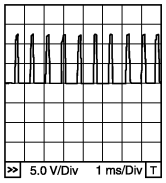 PBIB1042E
14	W	Camshaft position sensor (PHASE) (Bank 2)	**[Engine is running]** • **Warm-up condition** • Idle speed **NOTE:** The pulse cycle changes depending on rpm at idle	1.0 - 4.0V★ 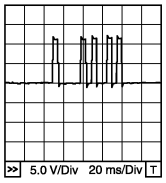 PBIB1039E
			[Engine is running] • Engine speed: 2,000 rpm	1.0 - 4.0V★ 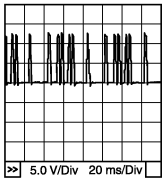 PBIB1040E
15	W	Knock sensor	**[Engine is running]** • Idle speed	Approximately 2.5V

TERMINAL NO.	WIRE COLOR	ITEM	CONDITION	DATA (DC Voltage)
16	BR	A/F sensor 1 (Bank 1)	**[Engine is running]** • **Warm-up condition** • Idle speed	Approximately 3.1V
35	O/B			Approximately 2.6V
56	V			Approximately 2.3V
75	P			Approximately 2.3V
17 18 19 20	P/B G L L/W	EGR volume control valve	**[Engine is running]** • Idle speed	0.1 - 14V
21 22 23	L/W R/Y R/B	Fuel injector No. 5 Fuel injector No. 3 Fuel injector No. 1	**[Engine is running]** • **Warm-up condition** • Idle speed **NOTE:** The pulse cycle changes depending on rpm at idle	BATTERY VOLTAGE (11 - 14V)★ 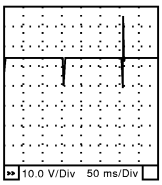 SEC984C
			[Engine is running] • **Warm-up condition** • Engine speed: 2,000 rpm	BATTERY VOLTAGE (11 - 14V)★ 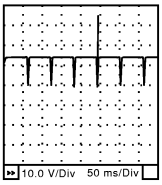 SEC985C
24	W	A/F sensor 1 heater (Bank 2)	**[Engine is running]** • **Warm-up condition** • Idle speed	Approximately 5V★ 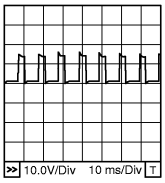 PBIB1584E
25	P	Heated oxygen sensor 2 heater (Bank 1)	**[Engine is running]** • Engine speed: Below 3,600 rpm after the following conditions are met - Engine: After warming up - Keeping the engine speed between 3,500 and 4,000 rpm for 1 minute and at idle for 1 minute under no load.	0 - 1.0V
			[Ignition switch: ON] • Engine stopped **[Engine is running]** • Engine speed: Above 3,600 rpm	BATTERY VOLTAGE (11 - 14V)
29	Y/G	VIAS control solenoid valve	**[Engine is running]** • Idle speed	BATTERY VOLTAGE (11 - 14V)
			[Engine is running] • Engine speed: Between 1,800 and 3,600 rpm	0 - 1.0V
32	BR	EVAP control system pressure sensor	**[Ignition switch: ON]**	Approximately 1.8 - 4.8V

TERMINAL NO.	WIRE COLOR	ITEM	CONDITION	DATA (DC Voltage)
33	Y	Camshaft position sensor (PHASE) (Bank 1)	**[Engine is running]** • **Warm-up condition** • Idle speed **NOTE:** The pulse cycle changes depending on rpm at idle	1.0 - 4.0V★ 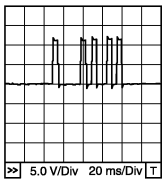 PBIB1039E
			[Engine is running] • Engine speed: 2,000 rpm	1.0 - 4.0V★ 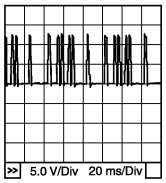 PBIB1040E
34	Y/G	Intake air temperature sensor	**[Engine is running]**	Approximately 0 - 4.8V Output voltage varies with intake air temperature.
40 41 42	V/W R/L R/W	Fuel injector No. 6 Fuel injector No. 4 Fuel injector No. 2	**[Engine is running]** • **Warm-up condition** • Idle speed **NOTE:** The pulse cycle changes depending on rpm at idle	BATTERY VOLTAGE (11 - 14V)★ 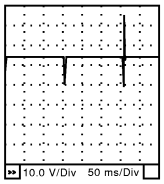 SEC984C
			[Engine is running] • **Warm-up condition** • Engine speed: 2,000 rpm	BATTERY VOLTAGE (11 - 14V)★ 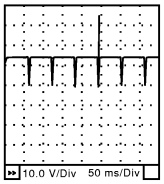 SEC985C

TERMINAL NO.	WIRE COLOR	ITEM	CONDITION	DATA (DC Voltage)
45	V/R	EVAP canister purge volume control solenoid valve	**[Engine is running]** • Idle speed • Accelerator pedal: Not depressed even slightly, after engine starting.	BATTERY VOLTAGE (11 - 14V)★ 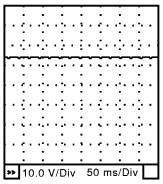 SEC990C
			[Engine is running] • Engine speed: About 2,000 rpm (More than 100 seconds after starting engine)	BATTERY VOLTAGE (11 - 14V)★ 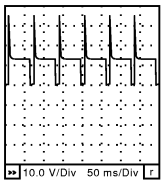 SEC991C
47	R	Throttle position sensor power supply	**[Ignition switch: ON]**	Approximately 5V
48	G/O	EVAP control system pressure sensor power supply	**[Ignition switch: ON]**	Approximately 5V
49	BR/Y	Refrigerant pressure sensor power supply	**[Ignition switch: ON]**	Approximately 5V
50	Y	Throttle position sensor 1	**[Ignition switch: ON]** • Engine stopped • Shift lever: D • Accelerator pedal: Fully released	More than 0.36V
			[Ignition switch: ON] • Engine stopped • Shift lever: D • Accelerator pedal: Fully depressed	Less than 4.75V
51	W/L	Mass air flow sensor	**[Engine is running]** • **Warm-up condition** • Idle speed	1.0 - 1.3V
			[Engine is running] • **Warm-up condition** • Engine speed: 2,500 rpm	1.6 - 2.0V
54	P/L	EGR temperature sensor	**[Ignition switch: ON]**	Less than 4.5V
			[Engine is running] • **Warm-up condition** • EGR system: Operating	0 - 1.5V
55	W	Heated oxygen sensor 2 (Bank 2)	**[Engine is running]** • Revving engine from idle to 3,000 rpm quickly after the following conditions are met - Engine: After warming up - Keeping the engine speed between 3,500 and 4,000 rpm for 1 minute and at idle for 1 minute under no load	0 - Approximately 1.0V
57	W/R	A/F sensor 1 (Bank 2)	**[Engine is running]** • **Warm-up condition** • Idle speed	Approximately 2.6V
58	LG/R			Approximately 2.3V
76	O			Approximately 3.1V
77	LG			Approximately 2.3V

TERMINAL NO.	WIRE COLOR	ITEM	CONDITION	DATA (DC Voltage)
60 61 62	P/L L/R Y/R	Ignition signal No. 5 Ignition signal No. 3 Ignition signal No. 1	**[Engine is running]** • **Warm-up condition** • Idle speed **NOTE:** The pulse cycle changes depending on rpm at idle	0 - 0.4V★ 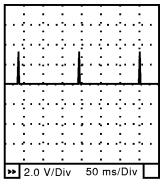 SEC986C
			[Engine is running] • **Warm-up condition** • Engine speed: 2,500 rpm	0.1 - 0.6V★ 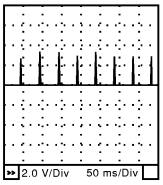 SEC987C
66	G	Throttle position sensor ground	**[Engine is running]** • **Warm-up condition** • Idle speed	Approximately 0V
67	B	Sensor ground	**[Engine is running]** • **Warm-up condition** • Idle speed	Approximately 0V
68	BR/W	PSP sensor power supply	**[Ignition switch: ON]**	Approximately 5V
69	L	Throttle position sensor 2	**[Ignition switch: ON]** • Engine stopped • Shift lever: D • Accelerator pedal: Fully released	Less than 4.75V
			[Ignition switch: ON] • Engine stopped • Shift lever: D • Accelerator pedal: Fully depressed	More than 0.36V
70	W	Refrigerant pressure sensor	**[Engine is running]** • **Warm-up condition** • Both A/C switch and blower fan switch: ON (Compressor operates.)	1.0 - 4.0V
73	Y/B	Engine coolant temperature sensor	**[Engine is running]**	Approximately 0 - 4.8V Output voltage varies with engine coolant temperature.
74	W	Heated oxygen sensor 2 (Bank 1)	**[Engine is running]** • Revving engine from idle to 3,000 rpm quickly after the following conditions are met - Engine: After warming up - Keeping the engine speed between 3,500 and 4,000 rpm for 1 minute and at idle for 1 minute under no load	0 - Approximately 1.0V
78	B	Heated oxygen sensor 2 ground	**[Engine is running]** • **Warm-up condition** • Idle speed	Approximately 0V

TER-MI-NAL NO.	WIRE COLOR	ITEM	CONDITION	DATA (DC Voltage)
79 80 81	GR/R GR G/R	Ignition signal No. 6 Ignition signal No. 4 Ignition signal No. 2	**[Engine is running]** • **Warm-up condition** • Idle speed **NOTE:** The pulse cycle changes depending on rpm at idle	0 - 0.4V★ 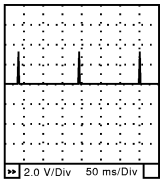 SEC986C
			[Engine is running] • **Warm-up condition** • Engine speed: 2,500 rpm	0.1 - 0.6V★ 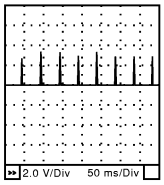 SEC987C
82	B	APP sensor 1 ground	**[Engine is running]** • **Warm-up condition** • Idle speed	Approximately 0V
83	G	APP sensor 2 ground	**[Engine is running]** • **Warm-up condition** • Idle speed	Approximately 0V
85	SB	Data link connector	—	—
86	P	CAN communication line	—	—
90	R/V	APP sensor 1 power supply	**[Ignition switch: ON]**	Approximately 5V
91	O	APP sensor 2 power supply	**[Ignition switch: ON]**	Approximately 5V
94	L	CAN communication line	—	—
98	W/B	Accelerator pedal position sensor 2	**[Ignition switch: ON]** • Engine stopped • Accelerator pedal: Fully released	0.25 - 0.5V
			[Ignition switch: ON] • Engine stopped • Accelerator pedal: Fully depressed	2.0 - 2.5V
99	G/Y	ASCD steering switch	**[Ignition switch: ON]** • ASCD steering switch: OFF	Approximately 4V
			[Ignition switch: ON] • MAIN switch: Pressed	Approximately 0V
			[Ignition switch: ON] • CANCEL switch: Pressed	Approximately 1V
			[Ignition switch: ON] • RESUME/ACCELERATE switch: Pressed	Approximately 3V
			[Ignition switch: ON] • SET/COAST switch: Pressed	Approximately 2V
101	R/G	Stop lamp switch	**[Ignition switch: OFF]** • Brake pedal: Fully released	Approximately 0V
			[Ignition switch: OFF] • Brake pedal: Slightly depressed	BATTERY VOLTAGE (11 - 14V)
102	O/B	PNP switch	**[Ignition switch: ON]** • Shift lever: P or N	BATTERY VOLTAGE (11 - 14V)
			[Ignition switch: ON] • Except the above gear position	Approximately 0V

TERMINAL NO.	WIRE COLOR	ITEM	CONDITION	DATA (DC Voltage)
104	O	Throttle control motor relay	**[Ignition switch: OFF]**	BATTERY VOLTAGE (11 - 14V)
			[Ignition switch: ON]	0 - 1.0V
106	W	Accelerator pedal position sensor 1	**[Ignition switch: ON]** • Engine stopped • Accelerator pedal: Fully released	0.5 - 1.0V
			[Ignition switch: ON] • Engine stopped • Accelerator pedal: Fully depressed	4.2 - 4.8V
107	R/L	Fuel tank temperature sensor	**[Engine is running]**	Approximately 0 - 4.8V Output voltage varies with fuel tank temperature.
108	G/B	ASCD brake switch	**[Ignition switch: ON]** • Brake pedal: Fully released	BATTERY VOLTAGE (11 - 14V)
			[Ignition switch: ON] • Brake pedal: Slightly depressed	Approximately 0V
109	R	Ignition switch	**[Ignition switch: OFF]**	0V
			[Ignition switch: ON]	BATTERY VOLTAGE (11 - 14V)
111	W/B	ECM relay (Self shut-off)	**[Engine is running]** **[Ignition switch: OFF]** • For a few seconds after turning ignition switch OFF	0 - 1.5V
			[Ignition switch: OFF] • More than a few seconds after turning ignition switch OFF	BATTERY VOLTAGE (11 - 14V)
113	B/O	Fuel pump relay	**[Ignition switch: ON]** • For 1 second after turning ignition switch ON **[Engine is running]**	0 - 1.5V
			[Ignition switch: ON] • More than 1 second after turning ignition switch ON	BATTERY VOLTAGE (11 - 14V)
115 116	B B	ECM ground	**[Engine is running]** • Idle speed	Body ground
117	LG/B	EVAP canister vent control valve	**[Ignition switch: ON]**	BATTERY VOLTAGE (11 - 14V)
119 120	R/G R/G	Power supply for ECM	**[Ignition switch: ON]**	BATTERY VOLTAGE (11 - 14V)
121	G	Power supply for ECM (Back-up)	**[Ignition switch: OFF]**	BATTERY VOLTAGE (11 - 14V)

★: Average voltage for pulse signal (Actual pulse signal can be confirmed by oscilloscope.)

CONSULT-III Function (ENGINE)

INFOID:0000000001717206

FUNCTION

Diagnostic test mode	Function
Work support	This mode enables a technician to adjust some devices faster and more accurately by following the indications on the CONSULT-III unit.
Self-diagnostic results	Self-diagnostic results such as 1st trip DTC, DTCs and 1st trip freeze frame data or freeze frame data can be read and erased quickly.*

Diagnostic test mode	Function
Data monitor	Input/Output data in the ECM can be read.
Active test	Diagnostic Test Mode in which CONSULT-III drives some actuators apart from the ECMs and also shifts some parameters in a specified range.
DTC & SRT confirmation	The status of system monitoring tests and the self-diagnosis status/result can be confirmed.
Function test	This mode is used to inform customers when their vehicle condition requires periodic maintenance.
ECM part number	ECM part number can be read.

*: The following emission-related diagnostic information is cleared when the ECM memory is erased.

- Diagnostic trouble codes
- 1st trip diagnostic trouble codes
- Freeze frame data
- 1st trip freeze frame data
- System readiness test (SRT) codes
- Test values

ENGINE CONTROL COMPONENT PARTS/CONTROL SYSTEMS APPLICATION

Item			DIAGNOSTIC TEST MODE						
			WORK SUPPORT	SELF-DIAGNOSTIC RESULTS		DATA MONI-TOR	ACTIVE TEST	DTC & SRT CONFIRMATION	
				DTC*1	FREEZE FRAME DATA*2			SRT STATUS	DTC WORK SUP-PORT
ENGINE CONTROL COMPONENT PARTS	INPUT	Crankshaft position sensor (POS)		×	×	×			
		Camshaft position sensor (PHASE)		×	×	×			
		Mass air flow sensor		×		×			
		Engine coolant temperature sensor		×	×	×	×		
		A/F sensor 1		×		×		×	×
		Heated oxygen sensor 2		×		×		×	×
		Wheel sensor		×	×	×			
		Accelerator pedal position sensor		×		×			
		Throttle position sensor		×	×	×			
		Fuel tank temperature sensor		×		×	×		
		EVAP control system pressure sen-sor		×		×			
		Intake air temperature sensor		×	×	×			
		EGR temperature sensor		×		×			
		Knock sensor		×					
		Refrigerant pressure sensor				×			
		Closed throttle position switch (accel-erator pedal position sensor signal)				×			
		Air conditioner switch				×			
		Park/neutral position (PNP) switch		×		×			
		Stop lamp switch		×		×			
		Power steering pressure sensor		×		×			
		Battery voltage				×			
		Load signal				×			
		Fuel level sensor		×		×			
		ASCD steering switch		×		×			
		ASCD brake switch		×		×			

Item			DIAGNOSTIC TEST MODE						
			WORK SUPPORT	SELF-DIAGNOSTIC RESULTS		DATA MONI-TOR	ACTIVE TEST	DTC & SRT CONFIRMATION	
				DTC*1	FREEZE FRAME DATA*2			SRT STATUS	DTC WORK SUP-PORT
ENGINE CONTROL COMPONENT PARTS	OUTPUT	Fuel injector				×	×		
		Power transistor (Ignition timing)				×	×		
		Throttle control motor relay		×		×			
		Throttle control motor		×					
		EVAP canister purge volume control solenoid valve		×		×	×		×
		Air conditioner relay				×			
		Fuel pump relay	×			×	×		
		Cooling fan relay		×		×	×		
		EGR volume control valve		×		×	×		
		A/F sensor 1 heater		×		×		×*3	
		Heated oxygen sensor 2 heater		×		×		×*3	
		EVAP canister vent control valve	×	×		×	×		
		Intake valve timing control solenoid valve		×		×	×		
		VIAS control solenoid valve		×		×	×		
		Electronic controlled engine mount				×	×		
		Calculated load value			×	×			

X: Applicable

*1: This item includes 1st trip DTCs.

*2: This mode includes 1st trip freeze frame data or freeze frame data. The items appear on CONSULT-III screen in freeze frame data mode only if a 1st trip DTC or DTC is detected. For details, refer to EC-43.

*3: Always “COMPLT” is displayed.

WORK SUPPORT MODE

Work Item

WORK ITEM	CONDITION	USAGE
FUEL PRESSURE RELEASE	• FUEL PUMP WILL STOP BY TOUCHING “START” DURING IDLING. CRANK A FEW TIMES AFTER ENGINE STALLS.	When releasing fuel pressure from fuel line
IDLE AIR VOL LEARN	• THE IDLE AIR VOLUME THAT KEEPS THE ENGINE WITHIN THE SPECIFIED RANGE IS MEMORIZED IN ECM.	When learning the idle air volume
SELF-LEARNING CONT	• THE COEFFICIENT OF SELF-LEARNING CONTROL MIXTURE RATIO RETURNS TO THE ORIGINAL COEFFICIENT.	When clearing the coefficient of self-learning control value

WORK ITEM	CONDITION	USAGE
EVAP SYSTEM CLOSE	CLOSE THE EVAP CANISTER VENT CONTROL VALVE IN ORDER TO MAKE EVAP SYSTEM CLOSE UNDER THE FOLLOWING CONDITIONS. • IGN SW “ON” • ENGINE NOT RUNNING • AMBIENT TEMPERATURE IS ABOVE 0°C (32°F). • NO VACUUM AND NO HIGH PRESSURE IN EVAP SYSTEM • FUEL TANK TEMP. IS MORE THAN 0°C (32°F). • WITHIN 10 MINUTES AFTER STARTING “EVAP SYSTEM CLOSE” • WHEN TRYING TO EXECUTE “EVAP SYSTEM CLOSE” UNDER THE CONDITION EXCEPT ABOVE, CONSULT-III WILL DISCONTINUE IT AND DISPLAY APPROPRIATE INSTRUCTION. **NOTE:** **WHEN STARTING ENGINE, CONSULT-III MAY DISPLAY “BATTERY VOLTAGE IS LOW. CHARGE BATTERY”, EVEN IN USING CHARGED BATTERY.**	When detecting EVAP vapor leak point of EVAP system
TARGET IDLE RPM ADJ*	• IDLE CONDITION	When setting target idle speed
TARGET IGN TIM ADJ*	• IDLE CONDITION	When adjusting target ignition timing
VIN REGISTRATION	• IN THIS MODE, VIN IS REGISTERED IN ECM.	When registering VIN in ECM

*: This function is not necessary in the usual service procedure.

SELF-DIAG RESULTS MODE

Self Diagnostic Item

Regarding items of DTC and 1st trip DTC, refer to EC-43, "Emission-related Diagnostic Information".)

Freeze Frame Data and 1st Trip Freeze Frame Data

Freeze frame data item*	Description
DIAG TROUBLE CODE [PXXXX]	• The engine control component part/control system has a trouble code, it is displayed as PXXXX. (Refer to EC-9.)
FUEL SYS-B1	• “Fuel injection system status” at the moment a malfunction is detected is displayed. • One mode in the following is displayed. Mode2: Open loop due to detected system malfunction Mode3: Open loop due to driving conditions (power enrichment, deceleration enleanment) Mode4: Closed loop - using oxygen sensor(s) as feedback for fuel control Mode5: Open loop - has not yet satisfied condition to go to closed loop
FUEL SYS-B2	
CAL/LD VALUE [%]	• The calculated load value at the moment a malfunction is detected is displayed.
COOLANT TEMP [°C] or [°F]	• The engine coolant temperature at the moment a malfunction is detected is displayed.
L-FUEL TRM-B1 [%]	• “Long-term fuel trim” at the moment a malfunction is detected is displayed. • The long-term fuel trim indicates much more gradual feedback compensation to the base fuel schedule than short-term fuel trim.
L-FUEL TRM-B2 [%]	
S-FUEL TRM-B1 [%]	• “Short-term fuel trim” at the moment a malfunction is detected is displayed. • The short-term fuel trim indicates dynamic or instantaneous feedback compensation to the base fuel schedule.
S-FUEL TRM-B2 [%]	
ENGINE SPEED [rpm]	• The engine speed at the moment a malfunction is detected is displayed.
VEHICL SPEED [km/h] or [mph]	• The vehicle speed at the moment a malfunction is detected is displayed.
ABSOL TH-P/S [%]	• The throttle valve opening angle at the moment a malfunction is detected is displayed.
B/FUEL SCHDL [msec]	• The base fuel schedule at the moment a malfunction is detected is displayed.

Freeze frame data item*	Description
INT/A TEMP SE [°C] or [°F]	• The intake air temperature at the moment a malfunction is detected is displayed.
INT MANI PRES [kPa]	• Always a certain value is displayed. • These items are not efficient for V42 models.
FTFMCH1	

*: The items are the same as those of 1st trip freeze frame data.

DATA MONITOR MODE

Monitored Item

×: Applicable

Monitored item	Unit	Description	Remarks
ENG SPEED	rpm	• Indicates the engine speed computed from the signal of the crankshaft position sensor (POS) and camshaft position sensor (PHASE).	• Accuracy becomes poor if engine speed drops below the idle rpm. • If the signal is interrupted while the engine is running, an abnormal value may be indicated.
MAS A/F SE-B1	V	• The signal voltage of the mass air flow sensor is displayed.	• When the engine is stopped, a certain value is indicated.
B/FUEL SCHDL	msec	• “Base fuel schedule” indicates the fuel injection pulse width programmed into ECM, prior to any learned on board correction.	
A/F ALPHA-B1	%	• The mean value of the air-fuel ratio feedback correction factor per cycle is indicated.	• When the engine is stopped, a certain value is indicated. • This data also includes the data for the air-fuel ratio learning control.
A/F ALPHA-B2	%		
COOLAN TEMP/S	°C or °F	• The engine coolant temperature (determined by the signal voltage of the engine coolant temperature sensor) is displayed.	• When the engine coolant temperature sensor is open or short-circuited, ECM enters fail-safe mode. The engine coolant temperature determined by the ECM is displayed.
A/F SEN1 (B1)	V	• The A/F signal computed from the input signal of the A/F sensor 1 is displayed.	
A/F SEN1 (B2)	V		
HO2S2 (B1)	V	• The signal voltage of the heated oxygen sensor 2 is displayed.	
HO2S2 (B2)	V		
HO2S2 MNTR (B1)	RICH/LEAN	• Display of heated oxygen sensor 2 signal: RICH: means the amount of oxygen after three way catalyst is relatively small. LEAN: means the amount of oxygen after three way catalyst is relatively large.	• When the engine is stopped, a certain value is indicated.
HO2S2 MNTR (B2)	RICH/LEAN		
VHCL SPEED SE	km/h or mph	• The vehicle speed computed from the vehicle speed signal sent from combination meter is displayed.	
BATTERY VOLT [V]	V	• The power supply voltage of ECM is displayed.	
ACCEL SEN 1	V	• The accelerator pedal position sensor signal voltage is displayed.	• ACCEL SEN 2 signal is converted by ECM internally. Thus, it differs from ECM terminal voltage signal.
ACCEL SEN 2	V		
TP SEN 1-B1	V	• The throttle position sensor signal voltage is displayed.	• TP SEN 2-B1 signal is converted by ECM internally. Thus, it differs from ECM terminal voltage signal.
TP SEN 2-B1	V		
FUEL T/TMP SE	°C or °F	• The fuel temperature (determined by the signal voltage of the fuel tank temperature sensor) is displayed.	
INT/A TEMP SE	°C or °F	• The intake air temperature (determined by the signal voltage of the intake air temperature sensor) is indicated.	

Monitored item	Unit	Description	Remarks
EGR TEMP SEN	V	• The signal voltage of EGR temperature sensor is displayed.	
EVAP SYS PRES	V	• The signal voltage of EVAP control system pressure sensor is displayed.	
FUEL LEVEL SE	V	• The signal voltage of the fuel level sensor is displayed.	
START SIGNAL	ON/OFF	• Indicates start signal status [ON/OFF] computed by the ECM according to the signals of engine speed and battery voltage.	• After starting the engine, [OFF] is displayed regardless of the starter signal.
CLSD THL POS	ON/OFF	• Indicates idle position [ON/OFF] computed by ECM according to the accelerator pedal position sensor signal.	
AIR COND SIG	ON/OFF	• Indicates [ON/OFF] condition of the air conditioner switch as determined by the air conditioner signal.	
P/N POSI SW	ON/OFF	• Indicates [ON/OFF] condition from the park/neutral position (PNP) switch signal.	
PW/ST SIGNAL	ON/OFF	• [ON/OFF] condition of the power steering system (determined by the signal voltage of the power steering pressure sensor signal) is indicated.	
LOAD SIGNAL	ON/OFF	• Indicates [ON/OFF] condition from the electrical load signal. ON: Rear window defogger switch is ON and/or lighting switch is in 2nd position. OFF: Both rear window defogger switch and lighting switch are OFF.	
IGNITION SW	ON/OFF	• Indicates [ON/OFF] condition from ignition switch signal.	
HEATER FAN SW	ON/OFF	• Indicates [ON/OFF] condition from heater fan switch signal.	
BRAKE SW	ON/OFF	• Indicates [ON/OFF] condition from the stop lamp switch signal.	
INJ PULSE-B1	msec	• Indicates the actual fuel injection pulse width compensated by ECM according to the input signals.	• When the engine is stopped, a certain computed value is indicated.
INJ PULSE-B2	msec		
IGN TIMING	BTDC	• Indicates the ignition timing computed by ECM according to the input signals.	• When the engine is stopped, a certain value is indicated.
CAL/LD VALUE	%	• “Calculated load value” indicates the value of the current air flow divided by peak air flow.	
MASS AIRFLOW	g·m/s	• Indicates the mass air flow computed by ECM according to the signal voltage of the mass air flow sensor.	
PURG VOL C/V	%	• Indicates the EVAP canister purge volume control solenoid valve control value computed by the ECM according to the input signals. • The opening becomes larger as the value increases.	
EGR VOL CON/V	step	• Indicates the EGR volume control value computed by the ECM according to the input signals. • The opening becomes larger as the value increases.	

Monitored item	Unit	Description	Remarks
INT/V TIM (B1)	°CA	• Indicates [°CA] of intake camshaft advanced angle.	
INT/V TIM (B2)	°CA		
INT/V SOL (B1)	%	• The control value of the intake valve timing control solenoid valve (determined by ECM according to the input signals) is indicated. • The advance angle becomes larger as the value increases.	
INT/V SOL (B2)	%		
VIAS S/V-1	ON/OFF	• The control condition of the VIAS control solenoid valve (determined by ECM according to the input signals) is indicated. ON: VIAS control solenoid valve is operating. OFF: VIAS control solenoid valve is not operating.	
AIR COND RLY	ON/OFF	• The air conditioner relay control condition (determined by ECM according to the input signals) is indicated.	
ENGINE MOUNT	IDLE/TRVL	• The control condition of the electronic controlled engine mount (determined by ECM according to the input signals) is indicated. IDLE: Engine speed is below 950 rpm TRVL: Engine speed is above 950 rpm	
FUEL PUMP RLY	ON/OFF	• Indicates the fuel pump relay control condition determined by ECM according to the input signals.	
VENT CONT/V	ON/OFF	• The control condition of the EVAP canister vent control valve (determined by ECM according to the input signals) is indicated. ON: Closed OFF: Open	
THRTL RELAY	ON/OFF	• Indicates the throttle control motor relay control condition determined by the ECM according to the input signals.	
COOLING FAN	HI/MID/LOW/OFF	• The control condition of the cooling fan (determined by ECM according to the input signals) is indicated. HI: High speed operation MID: Middle speed operation LOW: Low speed operation OFF: Stop	
HO2S2 HTR (B1)	ON/OFF	• Indicates [ON/OFF] condition of heated oxygen sensor 2 heater determined by ECM according to the input signals.	
HO2S2 HTR (B2)	ON/OFF		
I/P PULLY SPD	rpm	• Indicates the engine speed computed from the turbine revolution sensor signal.	
VEHICLE SPEED	km/h or MPH	• Indicates the vehicle speed computed from the revolution sensor signal.	
IDL A/V LEARN	YET/CMPLT	• Display the condition of idle air volume learning YET: Idle air volume learning has not been performed yet. CMPLT: Idle air volume learning has already been performed successfully.	
TRVL AFTER MIL	km or mile	• Distance traveled while MIL is activated.	

Monitored item	Unit	Description	Remarks
A/F S1 HTR (B1)	%	• Indicates A/F sensor 1 heater control value computed by ECM according to the input signals. • The current flow to the heater becomes larger as the value increases.	
A/F S1 HTR (B2)	%		
AC PRESS SEN	V	• The signal voltage from the refrigerant pressure sensor is displayed.	
VHCL SPEED SE	km/h or mph	• The vehicle speed computed from the vehicle speed signal sent from TCM is displayed.	
SET VHCL SPD	km/h or m.p.h	• The preset vehicle speed is displayed.	
MAIN SW	ON/OFF	• Indicates [ON/OFF] condition from MAIN switch signal.	
CANCEL SW	ON/OFF	• Indicates [ON/OFF] condition from CANCEL switch signal.	
RESUME/ACC SW	ON/OFF	• Indicates [ON/OFF] condition from RESUME/ACCELERATE switch signal.	
SET SW	ON/OFF	• Indicates [ON/OFF] condition from SET/COAST switch signal.	
BRAKE SW1	ON/OFF	• Indicates [ON/OFF] condition from ASCD brake switch signal.	
BRAKE SW2	ON/OFF	• Indicates [ON/OFF] condition of stop lamp switch signal.	
VHCL SPD CUT	NON/CUT	• Indicates the vehicle cruise condition. NON: Vehicle speed is maintained at the ASCD set speed. CUT: Vehicle speed increased to excessively high compared with the ASCD set speed, and ASCD operation is cut off.	
LO SPEED CUT	NON/CUT	• Indicates the vehicle cruise condition. NON: Vehicle speed is maintained at the ASCD set speed. CUT: Vehicle speed decreased to excessively low compared with the ASCD set speed, and ASCD operation is cut off.	
AT OD MONITOR	ON/OFF	• Indicates [ON/OFF] condition of A/T O/D according to the input signal from the TCM.	
AT OD CANCEL	ON/OFF	• Indicates [ON/OFF] condition of A/T O/D cancel signal sent from the TCM.	
CRUISE LAMP	ON/OFF	• Indicates [ON/OFF] condition of CRUISE lamp determined by the ECM according to the input signals.	
SET LAMP	ON/OFF	• Indicates [ON/OFF] condition of SET lamp determined by the ECM according to the input signals.	
A/F ADJ-B1	—	• Indicates the correction factor stored in ECM. The factor is calculated from the difference between the target air-fuel ratio stored in ECM and the air-fuel ratio calculated from A/F sensor 1 signal.	
A/F ADJ-B2	—		

NOTE:

Any monitored item that does not match the vehicle being diagnosed is deleted from the display automatically.

ACTIVE TEST MODE

Test Item

TEST ITEM	CONDITION	JUDGEMENT	CHECK ITEM (REMEDY)
FUEL INJECTION	• Engine: Return to the original trouble condition • Change the amount of fuel injection using CONSULT-III.	If trouble symptom disappears, see CHECK ITEM.	• Harness and connectors • Fuel injector • A/F sensor 1
IGNITION TIMING	• Engine: Return to the original trouble condition • Timing light: Set • Retard the ignition timing using CONSULT-III.	If trouble symptom disappears, see CHECK ITEM.	• Perform Idle Air Volume Learning
POWER BALANCE	• Engine: After warming up, idle the engine. • A/C switch: OFF • Shift lever: P or N • Cut off each fuel injector signal one at a time using CONSULT-III.	Engine runs rough or dies.	• Harness and connectors • Compression • Fuel injector • Power transistor • Spark plug • Ignition coil
COOLING FAN*	• Ignition switch: ON • Turn the cooling fan “HI”, “MID”, “LOW” and “OFF” using CONSULT-III.	Cooling fan moves and stops.	• Harness and connectors • Cooling fan motor • IPDM E/R
ENG COOLANT TEMP	• Engine: Return to the original trouble condition • Change the engine coolant temperature using CONSULT-III.	If trouble symptom disappears, see CHECK ITEM.	• Harness and connectors • Engine coolant temperature sensor • Fuel injector
FUEL PUMP RELAY	• Ignition switch: ON (Engine stopped) • Turn the fuel pump relay “ON” and “OFF” using CONSULT-III and listen to operating sound.	Fuel pump relay makes the operating sound.	• Harness and connectors • Fuel pump relay
EGR VOL CONT/V	• Ignition switch: ON (Engine stopped) • Change the EGR volume control valve opening step using CONSULT-III.	EGR volume control valve makes an operating sound.	• Harness and connectors • EGR volume control valve
VIAS S/V-1	• Ignition switch: ON • Turn solenoid valve “ON” and “OFF” using CONSULT-III and listen to operating sound.	Solenoid valve makes the operating sound.	• Harness and connectors • Solenoid valve
ENGINE MOUNTING	• Ignition switch: ON • Turn electronic controlled engine mount “IDLE” and “TRVL” with the CONSULT-III.	Electronic controlled engine mount makes the operating sound.	• Harness and connectors • Electronic controlled engine mount
PURG VOL CONT/V	• Engine: After warming up, run engine at 1,500 rpm. • Change the EVAP canister purge volume control solenoid valve opening percent using CONSULT-III.	Engine speed changes according to the opening percent.	• Harness and connectors • Solenoid valve
FUEL/T TEMP SEN	• Change the fuel tank temperature using CONSULT-III.		
VENT CONTROL/V	• Ignition switch: ON (Engine stopped) • Turn solenoid valve “ON” and “OFF” with the CONSULT-III and listen to operating sound.	Solenoid valve makes an operating sound.	• Harness and connectors • Solenoid valve
V/T ASSIGN ANGLE	• Engine: Return to the original trouble condition • Change intake valve timing using CONSULT-III.	If trouble symptom disappears, see CHECK ITEM.	• Harness and connectors • Intake valve timing control solenoid valve

*: Leaving cooling fan “OFF” with CONSULT-III while engine is running may cause the engine to overheat.

DTC & SRT CONFIRMATION MODE

SRT STATUS Mode
For details, refer to EC-43, "Emission-related Diagnostic Information".

SRT WORK SUPPORT Mode
This mode enables a technician to drive a vehicle to set the SRT while monitoring the SRT status.

DTC WORK SUPPORT Mode

Test mode	Test item	Corresponding DTC No.	Reference page
EVAPORATIVE SYSTEM	PURG FLOW P0441	P0441	EC-359
	EVP SML LEAK P0442/P1442*	P0442	EC-364
		P0455	EC-412
	EVP V/S LEAK P0456/P1456*	P0456	EC-418
	PURG VOL CN/V P1444	P0443	EC-371
A/F SEN1	A/F SEN1 (B1) P1276	P0130	EC-207
	A/F SEN1 (B1) P1278/P1279	P0133	EC-232
	A/F SEN1 (B2) P1286	P0150	EC-207
	A/F SEN1 (B2) P1288/P1289	P0153	EC-232
HO2S2	HO2S2 (B1) P0139	P0139	EC-262
	HO2S2 (B1) P1146	P0138	EC-250
	HO2S2 (B1) P1147	P0137	EC-241
	HO2S2 (B2) P0159	P0159	EC-262
	HO2S2 (B2) P1166	P0158	EC-250
	HO2S2 (B2) P1167	P0157	EC-241
EGR SYSTEM	EGR SYSTEM P0400	P0400	EC-333
	EGR SYSTEM P1402	P1402	EC-477

*: DTC P1442 and P1456 does not apply to V42 models but appears in DTC Work Support Mode screens.

Generic Scan Tool (GST) Function

INFOID:0000000001717207

DESCRIPTION

Generic Scan Tool (OBDII scan tool) complying with SAE J1978 has 8 different functions explained below.
ISO15765-4 is used as the protocol.
The name “GST” or “Generic Scan Tool” is used in this service manual.

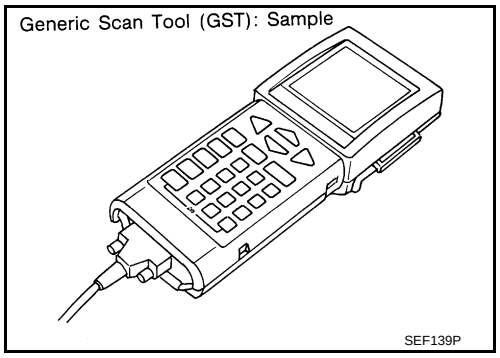

FUNCTION

Diagnostic test mode		Function
Service $01	READINESS TESTS	This diagnostic service gains access to current emission-related data values, including analog inputs and outputs, digital inputs and outputs, and system status information.
Service $02	(FREEZE DATA)	This diagnostic service gains access to emission-related data value which were stored by ECM during the freeze frame. For details, refer to EC-107, "CONSULT-III Function (ENGINE)".

Diagnostic test mode		Function
Service $03	DTCs	This diagnostic service gains access to emission-related power train trouble codes which were stored by ECM.
Service $04	CLEAR DIAG INFO	This diagnostic service can clear all emission-related diagnostic information. This includes: • Clear number of diagnostic trouble codes (Service $01) • Clear diagnostic trouble codes (Service $03) • Clear trouble code for freeze frame data (Service $01) • Clear freeze frame data (Service $02) • Reset status of system monitoring test (Service $01) • Clear on board monitoring test results (Service $06 and $07)
Service $06	(ON BOARD TESTS)	This diagnostic service accesses the results of on board diagnostic monitoring tests of specific components/systems that are not continuously monitored.
Service $07	(ON BOARD TESTS)	This diagnostic service enables the off board test drive to obtain test results for emission-related powertrain components/systems that are continuously monitored during normal driving conditions.
Service $08	—	This diagnostic service can close EVAP system in ignition switch ON position (Engine stopped). When this diagnostic service is performed, EVAP canister vent control valve can be closed. In the following conditions, this diagnostic service cannot function. • Low ambient temperature • Low battery voltage • Engine running • Ignition switch OFF • Low fuel temperature • Too much pressure is applied to EVAP system
Service $09	(CALIBRATION ID)	This diagnostic service enables the off-board test device to request specific vehicle information such as Vehicle Identification Number (VIN) and Calibration IDs.

INSPECTION PROCEDURE

1. Turn ignition switch OFF.
2. Connect GST to data link connector (2), which is located under LH dash panel near the hood opener handle.
   • Brake pedal (1)
3. Turn ignition switch ON.

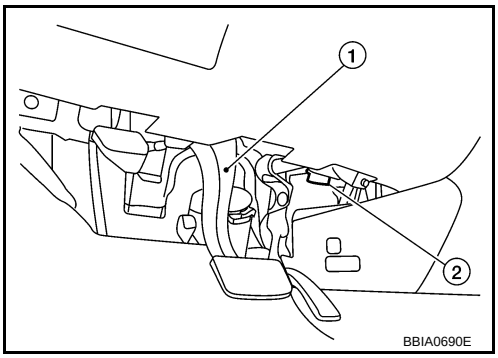

4. Enter the program according to instruction on the screen or in the operation manual.
   (*: Regarding GST screens in this section, sample screens are shown.)

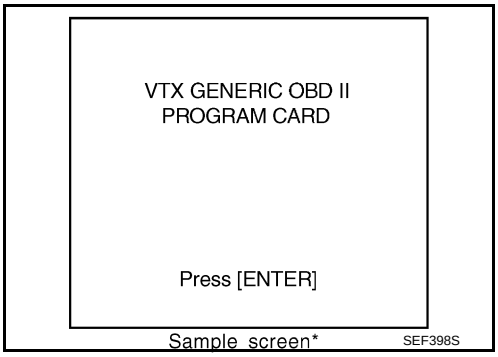

5. Perform each diagnostic service according to each service procedure.
For further information, see the GST Operation Manual of the tool maker.

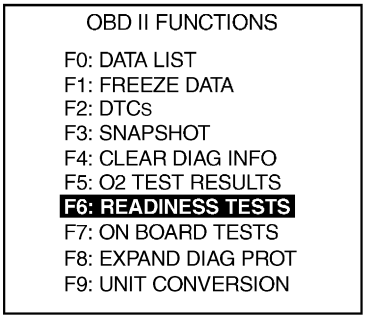

Sample screen* SEF416S

CONSULT-III Reference Value in Data Monitor Mode

INFOID:0000000001717208

Remarks:
- Specification data are reference values.
- Specification data are output/input values which are detected or supplied by the ECM at the connector.
  * Specification data may not be directly related to their components signals/values/operations.
  i.e. Adjust ignition timing with a timing light before monitoring IGN TIMING, because the monitor may show the specification data in spite of the ignition timing not being adjusted to the specification data. This IGN TIMING monitors the data calculated by the ECM according to the signals input from the camshaft position sensor and other ignition timing related sensors.

MONITOR ITEM	CONDITION		SPECIFICATION
ENG SPEED	• Run engine and compare CONSULT-III value with the tachometer indication.		Almost the same speed as the tachometer indication.
MAS A/F SE-B1	• See EC-122.		
B/FUEL SCHDL	• See EC-122.		
A/F ALPHA-B1 A/F ALPHA-B2	• See EC-122.		
COOLAN TEMP/S	• Engine: After warming up		More than 70°C (158°F)
A/F SEN1 (B1) A/F SEN1 (B2)	• Engine: After warming up	Maintaining engine speed at 2,000 rpm	Fluctuates around 1.5V
HO2S2 (B1) HO2S2 (B2)	• Revving engine from idle to 3,000 rpm quickly after the following conditions are met - Engine: After warming up - Keeping the engine speed between 3,500 and 4,000 rpm for 1 minute and at idle for 1 minute under no load		0 - 0.3V ←→ Approx. 0.6 - 1.0V
HO2S2 MNTR (B1) HO2S2 MNTR (B2)			LEAN ←→ RICH
VHCL SPEED SE	• Turn drive wheels and compare CONSULT-III value with the speedometer indication.		Almost the same speed as the speedometer indication
BATTERY VOLT	• Ignition switch: ON (Engine stopped)		11 - 14V
ACCEL SEN 1 ACCEL SEN 2*	• Ignition switch: ON (Engine stopped)	Accelerator pedal: Fully released	0.5 - 1.0V
		Accelerator pedal: Fully depressed	4.2 - 4.8V
TP SEN 1-B1 TP SEN 2-B1*	• Ignition switch: ON (Engine stopped) • Shift lever: D	Accelerator pedal: Fully released	More than 0.36V
		Accelerator pedal: Fully depressed	Less than 4.75V
EGR TEMP SEN	• Engine: After warming up		Less than 4.5V
EVAP SYS PRES	• Ignition switch: ON		Approx. 1.8 - 4.8V
START SIGNAL	• Ignition switch: ON → START → ON		OFF → ON → OFF
CLSD THL POS	• Ignition switch: ON (Engine stopped)	Accelerator pedal: Fully released	ON
		Accelerator pedal: Slightly depressed	OFF
AIR COND SIG	• Engine: After warming up, idle the engine	Air conditioner switch: OFF	OFF
		Air conditioner switch: ON (Compressor operates.)	ON
P/N POSI SW	• Ignition switch: ON	Shift lever: P or N	ON
		Shift lever: Except above	OFF

MONITOR ITEM	CONDITION		SPECIFICATION
PW/ST SIGNAL	• Engine: After warming up, idle the engine	Steering wheel: Not being turned	OFF
		Steering wheel: Being turned	ON
LOAD SIGNAL	• Ignition switch: ON	Rear window defogger switch is ON and/or lighting switch is in 2nd.	ON
		Rear window defogger switch is OFF and lighting switch is OFF.	OFF
IGNITION SW	• Ignition switch: ON → OFF → ON		ON → OFF → ON
HEATER FAN SW	• Engine: After warming up, idle the engine	Heater fan: Operating	ON
		Heater fan: Not operating	OFF
BRAKE SW	• Ignition switch: ON	Brake pedal: Fully released	OFF
		Brake pedal: Slightly depressed	ON
INJ PULSE-B1 INJ PULSE-B2	• Engine: After warming up • Shift lever: P or N • Air conditioner switch: OFF • No load	Idle	2.0 - 3.0 msec
		2,000 rpm	1.9 - 2.9 msec
IGN TIMING	• Engine: After warming up • Shift lever: P or N • Air conditioner switch: OFF • No load	Idle	13° - 18° BTDC
		2,000 rpm	25° - 45° BTDC
CAL/LD VALUE	• Engine: After warming up • Shift lever: P or N • Air conditioner switch: OFF • No load	Idle	5% - 35%
		2,500 rpm	5% - 35%
MASS AIRFLOW	• Engine: After warming up • Shift lever: P or N • Air conditioner switch: OFF • No load	Idle	2.0 - 6.0 g·m/s
		2,500 rpm	7.0 - 20.0 g·m/s
PURG VOL C/V	• Engine: After warming up • Shift lever: P or N • Air conditioner switch: OFF • No load	Idle (Accelerator pedal is not depressed even slightly, after engine starting)	0%
		2,000 rpm	—
EGR VOL CON/V	• Engine: After warming up • Shift lever: P or N • Air conditioner switch: OFF • No load	Idle	0 step
		Revving engine from idle up to 3,000 rpm quickly	10 - 55 step
INT/V TIM (B1) INT/V TIM (B2)	• Engine: After warming up • Shift lever: P or N • Air conditioner switch: OFF • No load	Idle	–5° - 5°CA
		2,000 rpm	Approx. 0° - 30°CA
INT/V SOL (B1) INT/V SOL (B2)	• Engine: After warming up • Shift lever: P or N • Air conditioner switch: OFF • No load	Idle	0% - 2%
		2,000 rpm	Approx. 0% - 50%
VIAS S/V-1	• Engine: After warming up	1,800 - 3,600 rpm	ON
		Except above conditions	OFF
AIR COND RLY	• Engine: After warming up idle the engine	Air conditioner switch: OFF	OFF
		Air conditioner switch: ON (Compressor operates)	ON
ENGINE MOUNT	• Engine: Running	Engine speed: Below 950 rpm	IDLE
		Engine speed: Above 950 rpm	TRVL
FUEL PUMP RLY	• For 1 second after turning ignition switch ON • Engine running or cranking		ON
	• Except above conditions		OFF

MONITOR ITEM	CONDITION		SPECIFICATION
VENT CONT/V	• Ignition switch: ON		OFF
THRTL RELAY	• Ignition switch: ON		ON
COOLING FAN	• Engine: After warming up, idle the engine • Air conditioner switch: OFF	Engine coolant temperature: 94°C (201°F) or less	OFF
		Engine coolant temperature: Between 95°C (203°F) and 99°C (210°F)	LOW
		Engine coolant temperature: Between 100°C (212°F) and 104°C (219°F)	MID
		Engine coolant temperature: 105°C (221°F) or more	HI
HO2S2 HTR (B1) HO2S2 HTR (B2)	• Engine speed: Below 3,600 rpm after the following conditions are met. - Engine: After warming up - Keeping the engine speed between 3,500 and 4,000 rpm for 1 minute and at idle for 1 minute under no load		ON
	• Engine speed: Above 3,600 rpm		OFF
I/P PULLY SPD	• Vehicle speed: More than 20 km/h (12 MPH)		Almost the same speed as the tachometer indication
VEHICLE SPEED	• Turn drive wheels and compare CONSULT-III value with the speedometer indication.		Almost the same speed as the speedometer indication
TRVL AFTER MIL	• Ignition switch: ON	Vehicle has traveled after MIL has turned ON.	0 - 65,535 km (0 - 40,723 mile)
A/F S1 HTR (B1) A/F S1 HTR (B2)	• Engine: After warming up, idle the engine		0 - 100%
AC PRESS SEN	• Engine: Idle • Both A/C switch and blower fan switch: ON (Compressor operates)		1.0 - 4.0V
VHCL SPEED SE	• Turn drive wheels and compare speedometer indication with the CONSULT-III value.		Almost the same speed as the speedometer indication
SET VHCL SPD	• Engine: Running	ASCD: Operating.	The preset vehicle speed is displayed.
MAIN SW	• Ignition switch: ON	MAIN switch: Pressed	ON
		MAIN switch: Released	OFF
CANCEL SW	• Ignition switch: ON	CANCEL switch: Pressed	ON
		CANCEL switch: Released	OFF
RESUME/ACC SW	• Ignition switch: ON	RESUME/ACCELERATE switch: Pressed	ON
		RESUME/ACCELERATE switch: Released	OFF
SET SW	• Ignition switch: ON	SET/COAST switch: Pressed	ON
		SET/COAST switch: Released	OFF
BRAKE SW1	• Ignition switch: ON	Brake pedal: Fully released	ON
		Brake pedal: Slightly depressed	OFF
BRAKE SW2	• Ignition switch: ON	Brake pedal: Fully released	OFF
		Brake pedal: Slightly depressed	ON
CRUISE LAMP	• Ignition switch: ON	MAIN switch: Pressed at the 1st time → at the 2nd time	ON → OFF
SET LAMP	• MAIN switch: ON • When vehicle speed is between 40 km/h (25 MPH) and 144 km/h (89 MPH)	ACSD: Operating	ON
		ASCD: Not operating	OFF

*: Accelerator pedal position sensor 2 signal and throttle position sensor 2 signal are converted by ECM internally. Thus, they differ from ECM terminals voltage signal.

TROUBLE DIAGNOSIS - SPECIFICATION VALUE

Description

INFOID:0000000001717210

The specification (SP) value indicates the tolerance of the value that is displayed in “SPEC” of “DATA MONITOR” mode with CONSULT-III during normal operation of the Engine Control System. When the value in “SPEC” of “DATA MONITOR” mode is within the SP value, the Engine Control System is confirmed OK. When the value in “SPEC” of “DATA MONITOR” mode is NOT within the SP value, the Engine Control System may have one or more malfunctions.
The SP value is used to detect malfunctions that may affect the Engine Control System, but will not light the MIL.
The SP value will be displayed for the following three items:
- B/FUEL SCHDL (The fuel injection pulse width programmed into ECM prior to any learned on board correction)
- A/F ALPHA-B1/B2 (The mean value of air-fuel ratio feedback correction factor per cycle)
- MAS A/F SE-B1 (The signal voltage of the mass air flow sensor)

Testing Condition

INFOID:0000000001717211

- Vehicle driven distance: More than 5,000 km (3,107 miles)
- Barometric pressure: 98.3 - 104.3 kPa (1.003 - 1.064 kg/cm^2, 14.25 - 15.12 psi)
- Atmospheric temperature: 20 - 30°C (68 - 86°F)
- Engine coolant temperature: 75 - 95°C (167 - 203°F)
- Transmission: Warmed-up
  - After the engine is warmed up to normal operating temperature, drive vehicle until “FLUID TEMP SE” (A/T fluid temperature sensor signal) indicates more than 60°C (140°F).
- Electrical load: Not applied
  - Rear window defogger switch, air conditioner switch, lighting switch are OFF. Steering wheel is straight ahead.
- Engine speed: Idle

Inspection Procedure

INFOID:0000000001717212

NOTE:
Perform “SPEC” in “DATA MONITOR” mode in maximum scale display.

1. Perform EC-68, "Basic Inspection".
2. Confirm that the testing conditions indicated above are met.
3. Select “B/FUEL SCHDL”, “A/F ALPHA-B1”, “A/F ALPHA-B2” and “MAS A/F SE-B1” in “SPEC” of “DATA MONITOR” mode with CONSULT-III.
4. Make sure that monitor items are within the SP value.
5. If NG, go to EC-123, "Diagnosis Procedure".

Diagnosis Procedure

INFOID:0000000001717213

OVERALL SEQUENCE

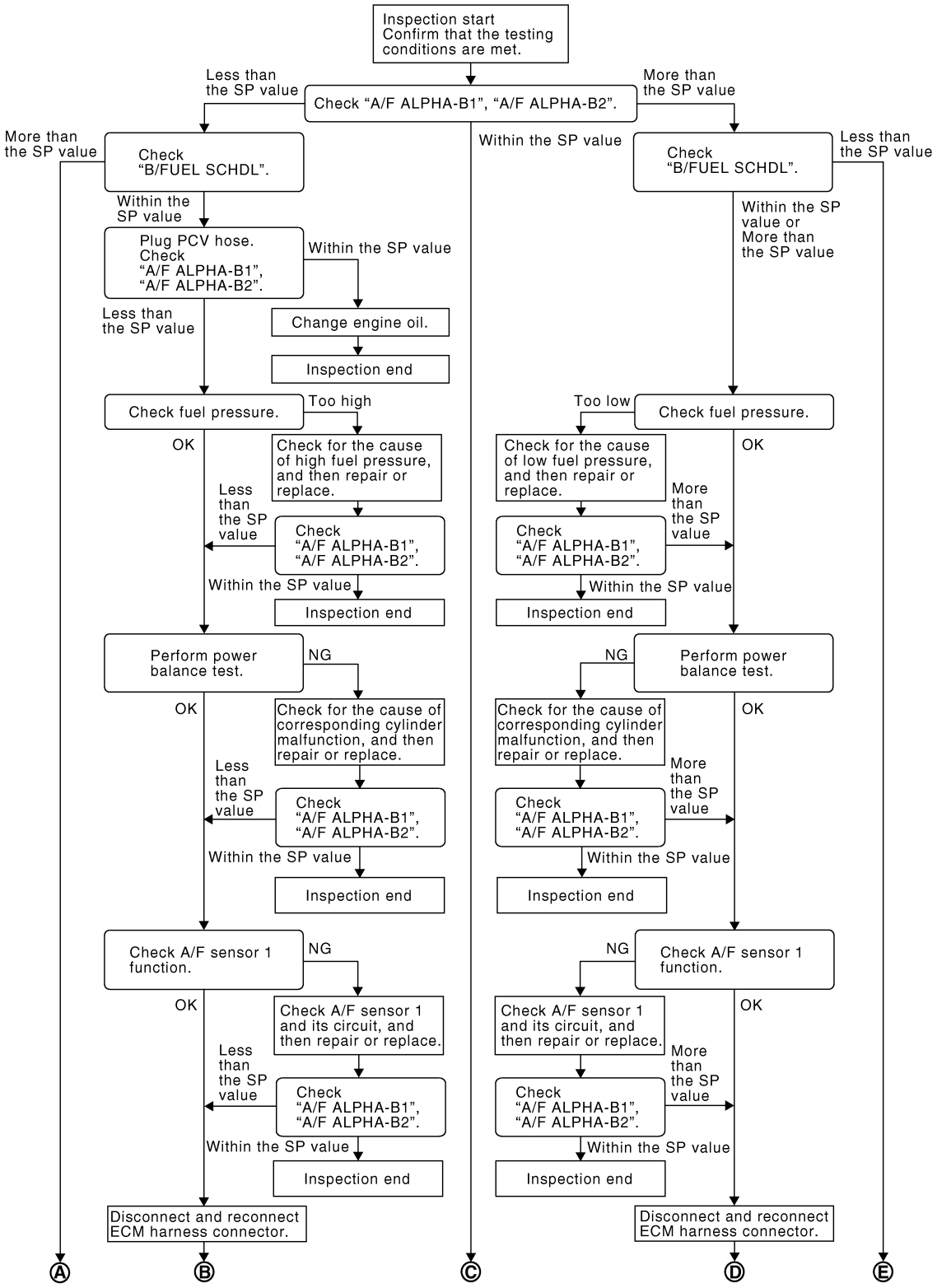

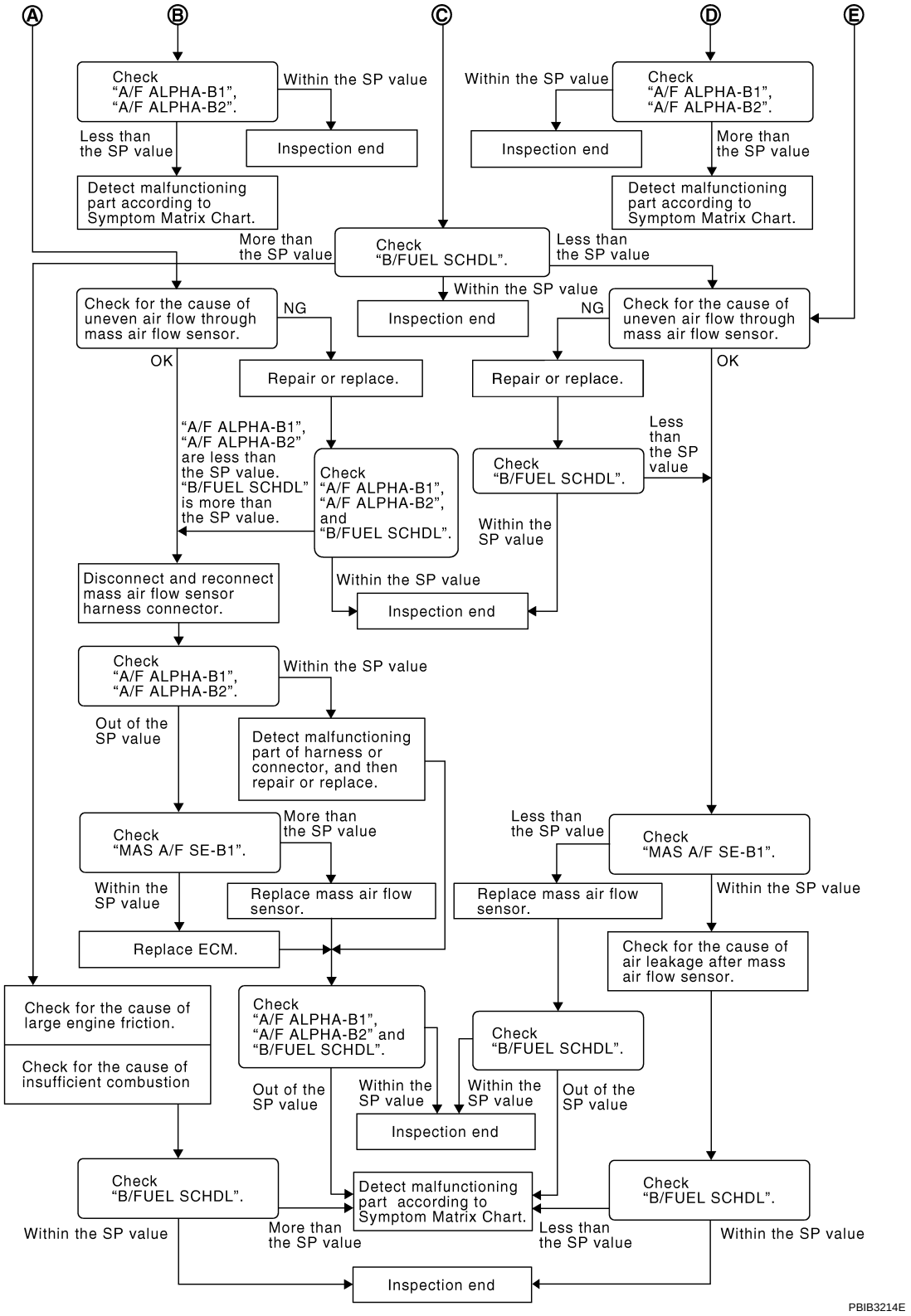

DETAILED PROCEDURE

1. CHECK "A/F ALPHA-B1", "A/F ALPHA-B2"

1. Start engine.
2. Confirm that the testing conditions are met. Refer to EC-122, "Testing Condition".
3. Select "A/F ALPHA-B1", "A/F ALPHA-B2" in "SPEC" of "DATA MONITOR" mode, and make sure that the each indication is within the SP value.
   NOTE:

Check “A/F ALPHA-B1”, “A/F ALPHA-B2” for approximately 1 minute because they may fluctuate. It is NG if the indication is out of the SP value even a little.

OK or NG

OK >> GO TO 17.
NG (Less than the SP value)>>GO TO 2.
NG (More than the SP value)>>GO TO 3.

2. CHECK “B/FUEL SCHDL”

Select “B/FUEL SCHDL” in “SPEC” of “DATA MONITOR” mode, and make sure that the indication is within the SP value.

OK or NG

OK >> GO TO 4.
NG (More than the SP value)>>GO TO 19.

3. CHECK “B/FUEL SCHDL”

Select “B/FUEL SCHDL” in “SPEC” of “DATA MONITOR” mode, and make sure that the indication is within the SP value.

OK or NG

OK >> GO TO 6.
NG (More than the SP value)>>GO TO 6.
NG (Less than the SP value)>>GO TO 25.

4. CHECK “A/F ALPHA-B1”, “A/F ALPHA-B2”

1. Stop the engine.
2. Disconnect PCV hose, and then plug it.
3. Start engine.
4. Select “A/F ALPHA-B1”, “A/F ALPHA-B2” in “SPEC” of “DATA MONITOR” mode, and make sure that the each indication is within the SP value.

OK or NG

OK >> GO TO 5.
NG >> GO TO 6.

5. CHANGE ENGINE OIL

1. Stop the engine.
2. Change engine oil.
   NOTE:
   This symptom may occur when a large amount of gasoline is mixed with engine oil because of driving conditions (such as when engine oil temperature does not rise enough since a journey distance is too short during winter). The symptom will not be detected after changing engine oil or changing driving condition.

>> **INSPECTION END**

6. CHECK FUEL PRESSURE

Check fuel pressure. (Refer to EC-75, "Fuel Pressure Check".)

OK or NG

OK >> GO TO 9.
NG (Fuel pressure is too high)>>Replace fuel pressure regulator, refer to EC-75, "Fuel Pressure Check". GO TO 8.
NG (Fuel pressure is too low)>>GO TO 7.

7. DETECT MALFUNCTIONING PART

1. Check the following.
- Clogged and bent fuel hose and fuel tube
- Clogged fuel filter
- Fuel pump and its circuit (Refer to EC-585.)
2. If NG, repair or replace the malfunctioning part. (Refer to EC-75, "Fuel Pressure Check".)
   If OK, replace fuel pressure regulator.

>> GO TO 8.

8. CHECK “A/F ALPHA-B1”, “A/F ALPHA-B2”

1. Start engine.
2. Select “A/F ALPHA-B1”, “A/F ALPHA-B2” in “SPEC” of “DATA MONITOR” mode, and make sure that the each indication is within the SP value.

OK or NG

OK >> **INSPECTION END**
NG >> GO TO 9.

9. PERFORM POWER BALANCE TEST

1. Perform “POWER BALANCE” in “ACTIVE TEST” mode.
2. Make sure that the each cylinder produces a momentary engine speed drop.

OK or NG

OK >> GO TO 12.
NG >> GO TO 10.

10. DETECT MALFUNCTIONING PART

1. Check the following.
- Ignition coil and its circuit (Refer to EC-591.)
- Fuel injector and its circuit (Refer to EC-579.)
- Intake air leakage
- Low compression pressure (Refer to EM-94, "On-Vehicle Service".)
2. If NG, repair or replace the malfunctioning part.
   If OK, replace fuel injector. (It may be caused by leakage from fuel injector or clogging.)

>> GO TO 11.

11. CHECK “A/F ALPHA-B1”, “A/F ALPHA-B2”

1. Start engine.
2. Select “A/F ALPHA-B1”, “A/F ALPHA-B2” in “SPEC” of “DATA MONITOR” mode, and make sure that the each indication is within the SP value.

OK or NG

OK >> **INSPECTION END**
NG >> GO TO 12.

12. CHECK A/F SENSOR 1 FUNCTION

Perform all DTC Confirmation Procedure related with A/F sensor 1.
- For DTC P0130, P0150, refer to EC-207, "DTC Confirmation Procedure".
- For DTC P0131, P0151, refer to EC-216, "DTC Confirmation Procedure".
- For DTC P0132, P0152, refer to EC-224, "DTC Confirmation Procedure".
- For DTC P0133, P0153, refer to EC-232, "DTC Confirmation Procedure".
- For DTC P2A00, P2A03, refer to EC-554, "DTC Confirmation Procedure".

OK or NG

OK >> GO TO 15.
NG >> GO TO 13.

13. CHECK A/F SENSOR 1 CIRCUIT

Perform Diagnostic Procedure according to corresponding DTC.

>> GO TO 14.

14. CHECK “A/F ALPHA-B1”, “A/F ALPHA-B2”

1. Start engine.
2. Select “A/F ALPHA-B1”, “A/F ALPHA-B2” in “SPEC” of “DATA MONITOR” mode, and make sure that the each indication is within the SP value.

OK or NG

OK >> **INSPECTION END**
NG >> GO TO 15.

15. DISCONNECT AND RECONNECT ECM HARNESS CONNECTOR

1. Stop the engine.
2. Disconnect ECM harness connector. Check pin terminal and connector for damage, and then reconnect it.

>> GO TO 16.

16. CHECK “A/F ALPHA-B1”, “A/F ALPHA-B2”

1. Start engine.
2. Select “A/F ALPHA-B1”, “A/F ALPHA-B2” in “SPEC” of “DATA MONITOR” mode, and make sure that the each indication is within the SP value.

OK or NG

OK >> **INSPECTION END**
NG >> Detect malfunctioning part according to EC-85, "Symptom Matrix Chart".

17. CHECK “B/FUEL SCHDL”

Select “B/FUEL SCHDL” in “SPEC” of “DATA MONITOR” mode, and make sure that the indication is within the SP value.

OK or NG

OK >> **INSPECTION END**
NG (More than the SP value)>>GO TO 18.
NG (Less than the SP value)>>GO TO 25.

18. DETECT MALFUNCTIONING PART

1. Check for the cause of large engine friction. Refer to the following.
- Engine oil level is too high
- Engine oil viscosity
- Belt tension of power steering, alternator, A/C compressor, etc. is excessive
- Noise from engine
- Noise from transmission, etc.
2. Check for the cause of insufficient combustion. Refer to the following.
- EGR valve stuck
- Valve clearance malfunction
- Intake valve timing control function malfunction
- Camshaft sprocket installation malfunction, etc.

>> Repair or replace malfunctioning part, and then GO TO 30.

19. CHECK INTAKE SYSTEM

Check for the cause of uneven air flow through mass air flow sensor. Refer to the following.
- Crushed air ducts
- Malfunctioning seal of air cleaner element
- Uneven dirt of air cleaner element
- Improper specification of intake air system

OK or NG

OK >> GO TO 21.
NG >> Repair or replace malfunctioning part, and then GO TO 20.

20. CHECK “A/F ALPHA-B1”, “A/F ALPHA-B2”, AND “B/FUEL SCHDL”

Select “A/F ALPHA-B1”, “A/F ALPHA-B2”, and “B/FUEL SCHDL” in “SPEC” of “DATA MONITOR” mode, and make sure that the each indication is within the SP value.

OK or NG

OK >> **INSPECTION END**
NG (“B/FUEL SCHDL” is more, “A/F ALPHA-B1”, “A/F ALPHA-B2” are less than the SP value)>>GO TO 21.

21. DISCONNECT AND RECONNECT MASS AIR FLOW SENSOR HARNESS CONNECTOR

1. Stop the engine.
2. Disconnect mass air flow sensor harness connector. Check pin terminal and connector for damage and then reconnect it again.

>> GO TO 22.

22. CHECK “A/F ALPHA-B1”, “A/F ALPHA-B2”

1. Start engine.
2. Select “A/F ALPHA-B1”, “A/F ALPHA-B2” in “SPEC” of “DATA MONITOR” mode, and make sure that the each indication is within the SP value.

OK or NG

OK >> 1. Detect malfunctioning part of mass air flow sensor circuit and repair it. Refer to EC-177.
2. GO TO 29.

NG >> GO TO 23.

23. CHECK “MAS A/F SE-B1”

Select “MAS A/F SE-B1” in “SPEC” of “DATA MONITOR” mode, and make sure that the indication is within the SP value.

OK or NG

OK >> GO TO 24.

NG (More than the SP value)>>Replace mass air flow sensor, and then GO TO 29.

24. REPLACE ECM

1. Replace ECM.
2. Perform initialization of NVIS(NATS) system and registration of all NVIS(NATS) ignition key IDs. Refer to BL-180.
3. Perform EC-72, "VIN Registration".
4. Perform EC-73, "Accelerator Pedal Released Position Learning".
5. Perform EC-73, "Throttle Valve Closed Position Learning".
6. Perform EC-73, "Idle Air Volume Learning".

>> GO TO 29.

25. CHECK INTAKE SYSTEM

Check for the cause of uneven air flow through mass air flow sensor. Refer to the following.

- Crushed air ducts
- Malfunctioning seal of air cleaner element
- Uneven dirt of air cleaner element
- Improper specification of intake air system

OK or NG

OK >> GO TO 27.

NG >> Repair or replace malfunctioning part, and then GO TO 26.

26. CHECK “B/FUEL SCHDL”

Select “B/FUEL SCHDL” in “SPEC” of “DATA MONITOR” mode, and make sure that the indication is within the SP value.

OK or NG

OK >> **INSPECTION END**

NG (Less than the SP value)>>GO TO 27.

27. CHECK “MAS A/F SE-B1”

Select “MAS A/F SE-B1” in “SPEC” of “DATA MONITOR” mode, and make sure that the indication is within the SP value.

OK or NG

OK >> GO TO 28.

NG (Less than the SP value)>>Replace mass air flow sensor, and then GO TO 30.

28. CHECK INTAKE SYSTEM

Check for the cause of air leak after the mass air flow sensor. Refer to the following.
- Disconnection, looseness, and cracks in air duct
- Looseness of oil filler cap
- Disconnection of oil level gauge
- Open stuck, breakage, hose disconnection, or cracks of PCV valve
- Disconnection or cracks of EVAP purge hose, open stuck of EVAP canister purge volume control solenoid valve
- Malfunctioning seal of rocker cover gasket
- Disconnection, looseness, or cracks of hoses, such as vacuum hose, connecting to intake air system parts
- Malfunctioning seal of intake air system, etc.

>> GO TO 30.

29. CHECK “A/F ALPHA-B1”, “A/F ALPHA-B2”, AND “B/FUEL SCHDL”

Select “A/F ALPHA-B1”, “A/F ALPHA-B2”, and “B/FUEL SCHDL” in “SPEC” of “DATA MONITOR” mode, and make sure that the each indication is within the SP value.

OK or NG

OK >> **INSPECTION END**
NG >> Detect malfunctioning part according to EC-85, "Symptom Matrix Chart".

30. CHECK “B/FUEL SCHDL”

Select “B/FUEL SCHDL” in “SPEC” of “DATA MONITOR” mode, and then make sure that the indication is within the SP value.

OK or NG

OK >> **INSPECTION END**
NG >> Detect malfunctioning part according to EC-85, "Symptom Matrix Chart".

TROUBLE DIAGNOSIS FOR INTERMITTENT INCIDENT

Description

INFOID:0000000001717214

Intermittent incidents may occur. In many cases, the malfunction resolves itself (the part or circuit function returns to normal without intervention). It is important to realize that the symptoms described in the customer's complaint often do not recur on (1st trip) DTC visits. Realize also that the most frequent cause of intermittent incidents occurrences is poor electrical connections. Because of this, the conditions under which the incident occurred may not be clear. Therefore, circuit checks made as part of the standard diagnostic procedure may not indicate the specific malfunctioning area.

Common Intermittent Incidents Report Situations

STEP in Work Flow	Situation
2	The CONSULT-III is used. The SELF-DIAG RESULTS screen shows time data other than [0] or [1t].
3 or 4	The symptom described by the customer does not recur.
5	(1st trip) DTC does not appear during the DTC Confirmation Procedure.
10	The Diagnostic Procedure for PXXXX does not indicate the malfunctioning area.

Diagnosis Procedure

INFOID:0000000001717215

1. INSPECTION START

Erase (1st trip) DTCs. Refer to EC-43, "Emission-related Diagnostic Information".

>> GO TO 2.

2. CHECK GROUND TERMINALS

Check ground terminals for corroding or loose connection.
Refer to EC-138, "Ground Inspection"

OK or NG

OK >> GO TO 3.
NG >> Repair or replace.

3. SEARCH FOR ELECTRICAL INCIDENT

Perform GI-24, "How to Perform Efficient Diagnosis for an Electrical Incident", “INCIDENT SIMULATION TESTS”.

OK or NG

OK >> GO TO 4.
NG >> Repair or replace.

4. CHECK CONNECTOR TERMINALS

Refer to GI-21, "How to Check Terminal", “HOW TO PROBE CONNECTORS”, “How to Check Enlarged Contact Spring of Terminal”.

OK or NG

OK >> **INSPECTION END**
NG >> Repair or replace connector.

POWER SUPPLY AND GROUND CIRCUIT

Wiring Diagram

INFOID:0000000001717216

EC-MAIN-01

: DETECTABLE LINE FOR DTC
: NON-DETECTABLE LINE FOR DTC

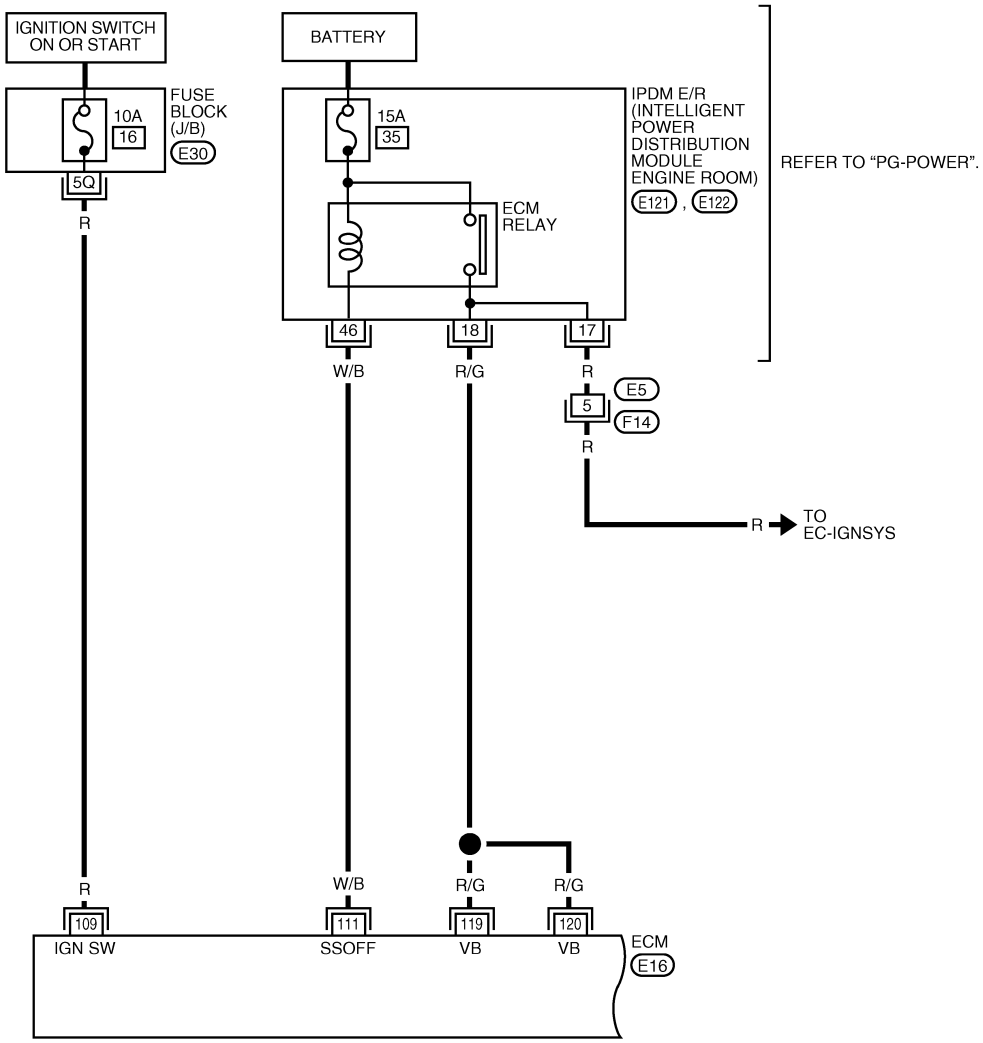

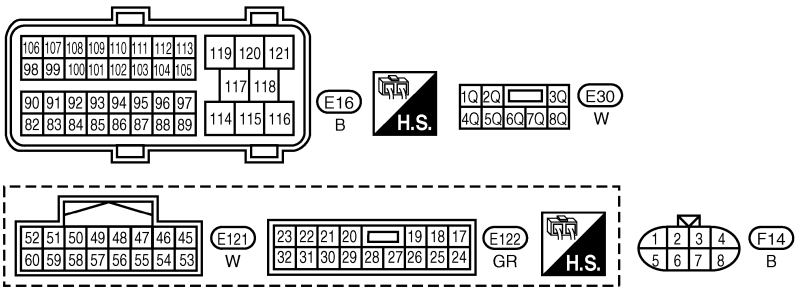

BBWA2500E

Specification data are reference values and are measured between each terminal and ground.

CAUTION:

Do not use ECM ground terminals when measuring input/output voltage. Doing so may result in damage to the ECM's transistor. Use a ground other than ECM terminals, such as the ground.

TERMINAL NO.	WIRE COLOR	ITEM	CONDITION	DATA (DC Voltage)
109	R	Ignition switch	**[Ignition switch: OFF]**	0V
			[Ignition switch: ON]	BATTERY VOLTAGE (11 - 14V)
111	W/B	ECM relay (Self shut-off)	**[Engine is running]** **[Ignition switch: OFF]** • For a few seconds after turning ignition switch OFF	0 - 1.5V
			[Ignition switch: OFF] • More than a few seconds after turning ignition switch OFF	BATTERY VOLTAGE (11 - 14V)
119 120	R/G R/G	Power supply for ECM	**[Ignition switch: ON]**	BATTERY VOLTAGE (11 - 14V)

EC-MAIN-02

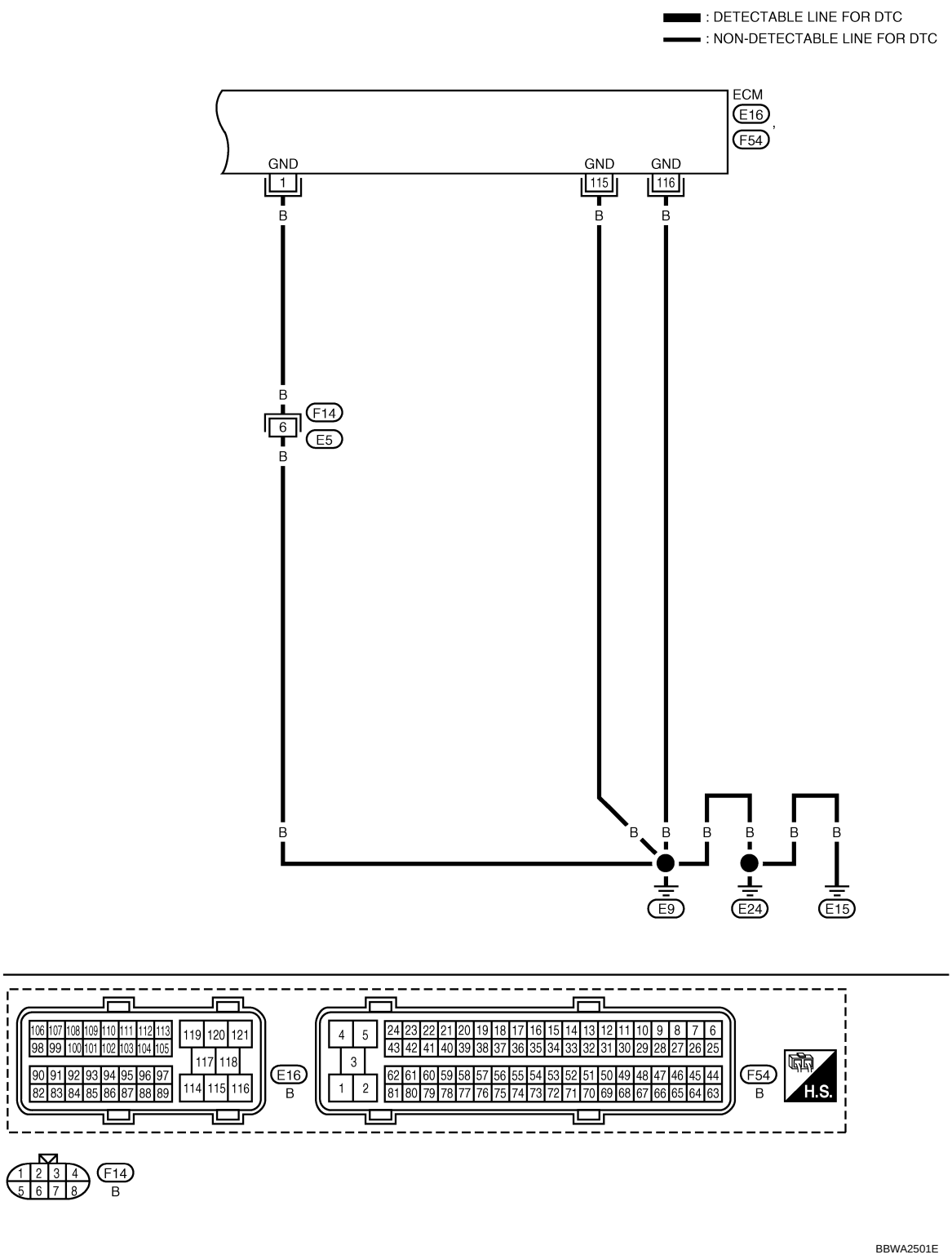

Specification data are reference values and are measured between each terminal and ground.

CAUTION:

Do not use ECM ground terminals when measuring input/output voltage. Doing so may result in damage to the ECM's transistor. Use a ground other than ECM terminals, such as the ground.

TERMINAL NO.	WIRE COLOR	ITEM	CONDITION	DATA (DC Voltage)
1	B	ECM ground	**[Engine is running]** • Idle speed	Body ground
115 116	B B	ECM ground	**[Engine is running]** • Idle speed	Body ground

Diagnosis Procedure

INFOID:0000000001717217

1. INSPECTION START

Start engine.
Is engine running?

Yes or No

Yes >> GO TO 8.
No >> GO TO 2.

2. CHECK ECM POWER SUPPLY CIRCUIT-I

1. Turn ignition switch OFF and then ON.
2. Check voltage between ECM terminal 109 and ground with CONSULT-III or tester.

Voltage: Battery voltage

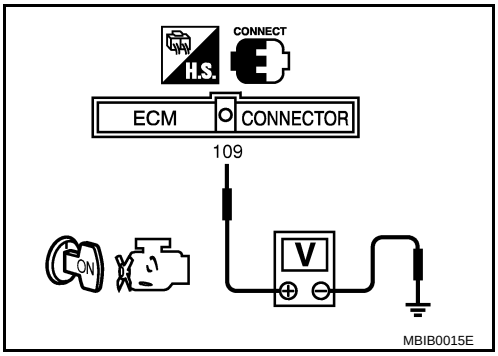

OK or NG

OK >> GO TO 4.
NG >> GO TO 3.

3. DETECT MALFUNCTIONING PART

Check the following.
- Fuse block (J/B) connector E30
- 10A fuse
- Harness for open or short between ECM and fuse

>> Repair harness or connectors.

4. CHECK GROUND CONNECTIONS

1. Turn ignition switch OFF.
2. Loosen and retighten three ground screws on the body. Refer to EC-138, "Ground Inspection".

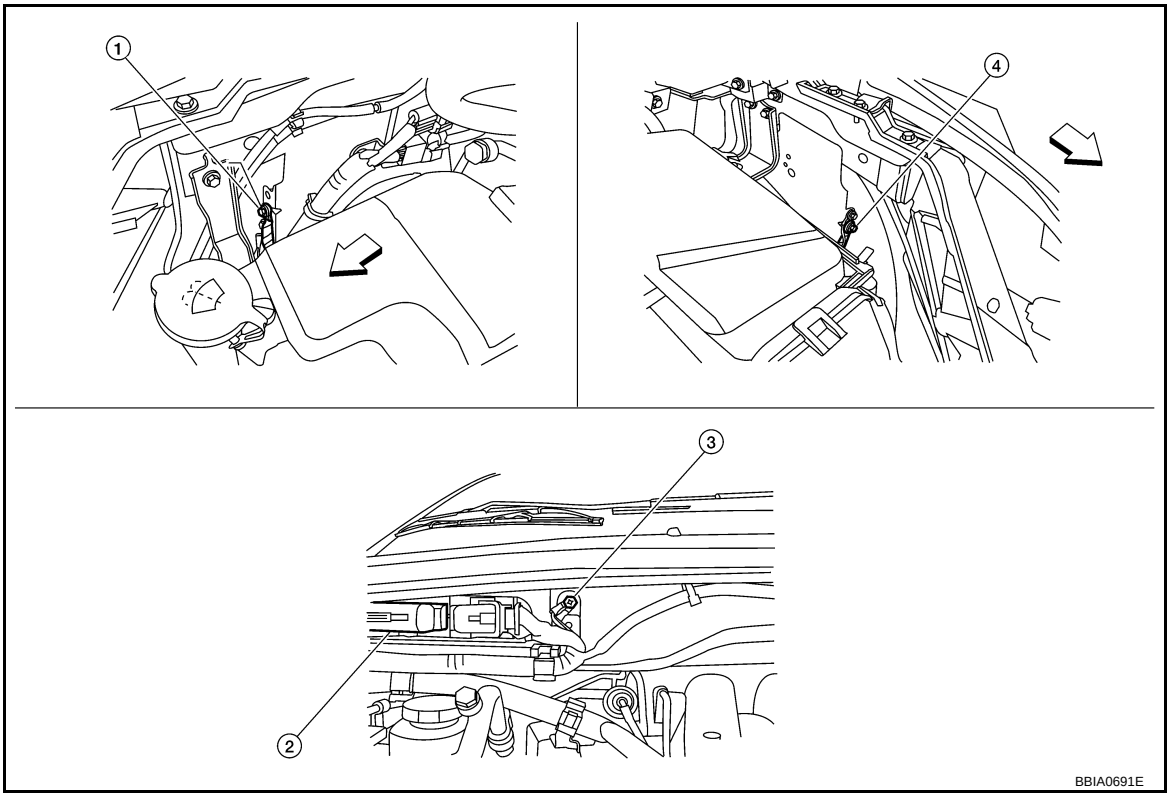

⇦ Vehicle front

1. Body ground E24
2. ECM
3. Body ground E9
4. Body ground E15

OK or NG

OK >> GO TO 5.
NG >> Repair or replace ground connections.

5. CHECK ECM GROUND CIRCUIT FOR OPEN AND SHORT-I

1. Disconnect ECM harness connector.
2. Check harness continuity between ECM terminals 1, 115, 116 and ground.
   Refer to Wiring Diagram.

   Continuity should exist.

3. Also check harness for short to power.

OK or NG

OK >> GO TO 7.
NG >> GO TO 6.

6. DETECT MALFUNCTIONING PART

Check the following.
- Harness connectors F14, E5
- Harness for open or short between ECM and ground

>> Repair open circuit or short to power in harness or connectors.

7. CHECK ECM POWER SUPPLY CIRCUIT-II

1. Reconnect ECM harness connector.
2. Turn ignition switch ON.

3. Check voltage between IPDM E/R terminal 17 and ground with CONSULT-III or tester.

Voltage: Battery voltage

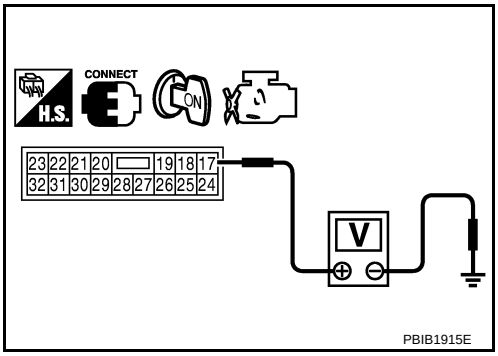

OK or NG

OK >> Go to EC-591.
NG >> GO TO 8.

8. CHECK ECM POWER SUPPLY CIRCUIT-III

1. Turn ignition switch OFF and wait at least 10 seconds.
2. Turn ignition switch ON and then OFF.
3. Check voltage between ECM terminals 119, 120 and ground with CONSULT-III or tester.

Voltage: After turning ignition switch OFF, battery voltage will exist for a few seconds, then drop approximately 0V.

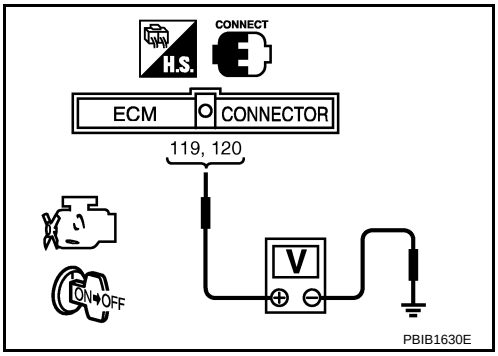

OK or NG

OK >> GO TO 13.
NG (Battery voltage does not exist.)>>GO TO 9.
NG (Battery voltage exists for more than a few seconds.)>>GO TO 11.

9. CHECK ECM POWER SUPPLY CIRCUIT-IV

Check voltage between ECM terminal 111 and ground with CONSULT-III or tester.

Voltage: Battery voltage

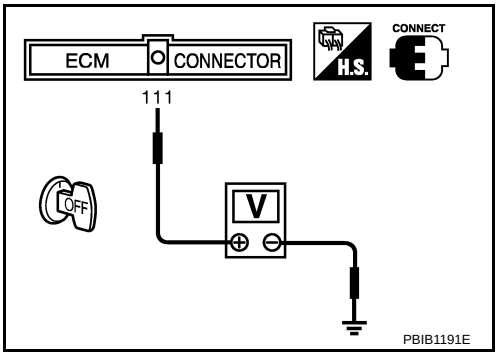

OK or NG

OK >> GO TO 10.
NG >> GO TO 11.

10. CHECK ECM POWER SUPPLY CIRCUIT-V

1. Disconnect ECM harness connector.
2. Disconnect IPDM E/R harness connector E122.
3. Check harness continuity between ECM terminals 119, 120 and IPDM E/R terminal 18. Refer to Wiring Diagram.

Continuity should exist.

4. Also check harness for short to ground and short to power.

OK or NG

OK >> GO TO 16.
NG >> Repair open circuit or short to ground or short to power in harness or connectors.

11. CHECK ECM POWER SUPPLY CIRCUIT-VI

1. Disconnect ECM harness connector.
2. Disconnect IPDM E/R harness connector E121.
3. Check harness continuity between ECM terminal 111 and IPDM E/R terminal 46. Refer to Wiring Diagram.

Continuity should exist.

4. Also check harness for short to ground and short to power.

OK or NG

OK >> GO TO 12.
NG >> Repair open circuit or short to ground or short to power in harness or connectors.

12. CHECK 15A FUSE

1. Disconnect 15A fuse from IPDM E/R.
2. Check 15A fuse.

OK or NG

OK >> GO TO 16.
NG >> Replace 15A fuse.

13. CHECK GROUND CONNECTIONS

1. Loosen and retighten three ground screws on the body. Refer to EC-138, "Ground Inspection".

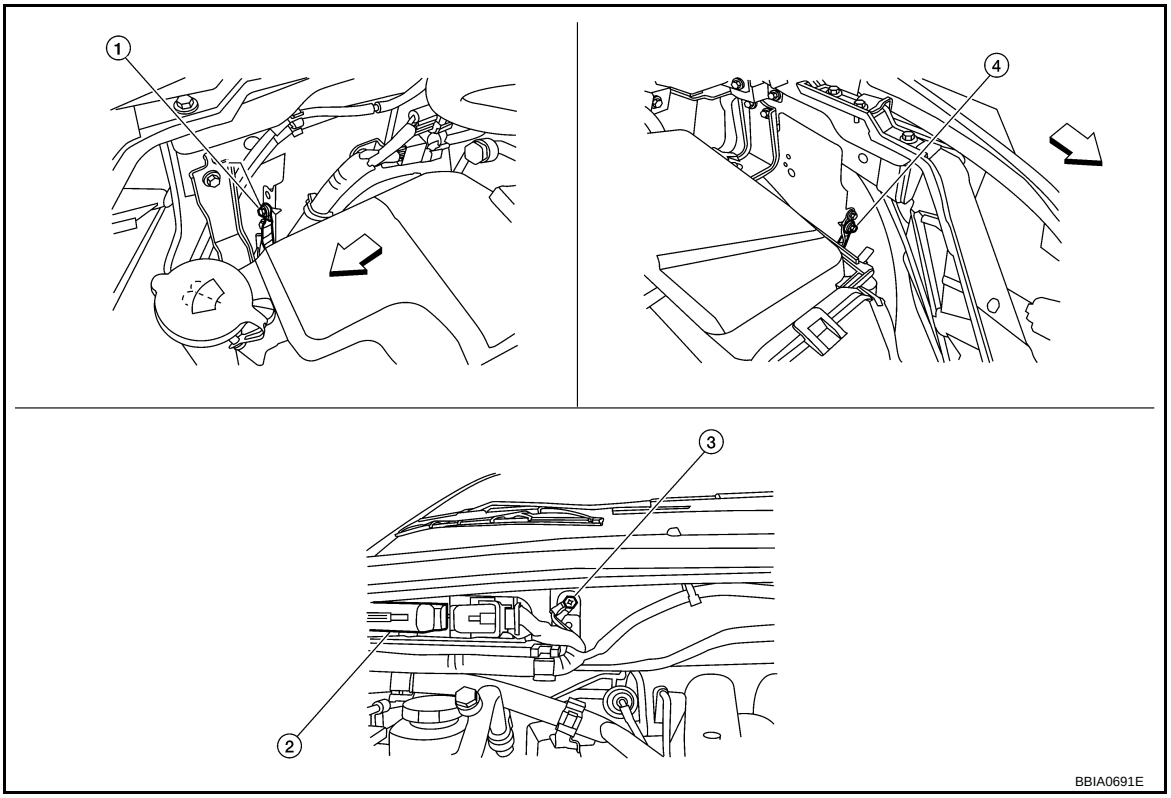

⇦: Vehicle front

1. Body ground E24
2. ECM
3. Body ground E9
4. Body ground E15

OK or NG

OK >> GO TO 14.
NG >> Repair or replace ground connections.

14. CHECK ECM GROUND CIRCUIT FOR OPEN AND SHORT-II

1. Disconnect ECM harness connector.
2. Check harness continuity between ECM terminals 1, 115, 116 and ground.
   Refer to Wiring Diagram.

Continuity should exist.

3. Also check harness for short to power.

OK or NG

OK >> GO TO 16.
NG >> GO TO 15.

15. DETECT MALFUNCTIONING PART

Check the following.
- Harness connectors F14, E5
- Harness for open or short between ECM and ground

>> Repair open circuit or short to power in harness or connectors.

16. CHECK INTERMITTENT INCIDENT

Refer to EC-130.

OK or NG

OK >> Replace IPDM E/R. Refer to PG-17.
NG >> Repair open circuit or short to power in harness or connectors.

Ground Inspection

INFOID:0000000001717218

Ground connections are very important to the proper operation of electrical and electronic circuits. Ground connections are often exposed to moisture, dirt and other corrosive elements. The corrosion (rust) can become an unwanted resistance. This unwanted resistance can change the way a circuit works.
Electronically controlled circuits are very sensitive to proper grounding. A loose or corroded ground can drastically affect an electronically controlled circuit. A poor or corroded ground can easily affect the circuit. Even when the ground connection looks clean, there can be a thin film of rust on the surface.
When inspecting a ground connection follow these rules:
- Remove the ground bolt or screw.
- Inspect all mating surfaces for tarnish, dirt, rust, etc.
- Clean as required to assure good contact.
- Reinstall bolt or screw securely.
- Inspect for “add-on” accessories which may be interfering with the ground circuit.
- If several wires are crimped into one ground eyelet terminal, check for proper crimps. Make sure all of the wires are clean, securely fastened and providing a good ground path. If multiple wires are cased in one eyelet make sure no ground wires have excess wire insulation.

For detailed ground distribution information, refer to PG-30, "Ground Distribution".

Ground Inspection

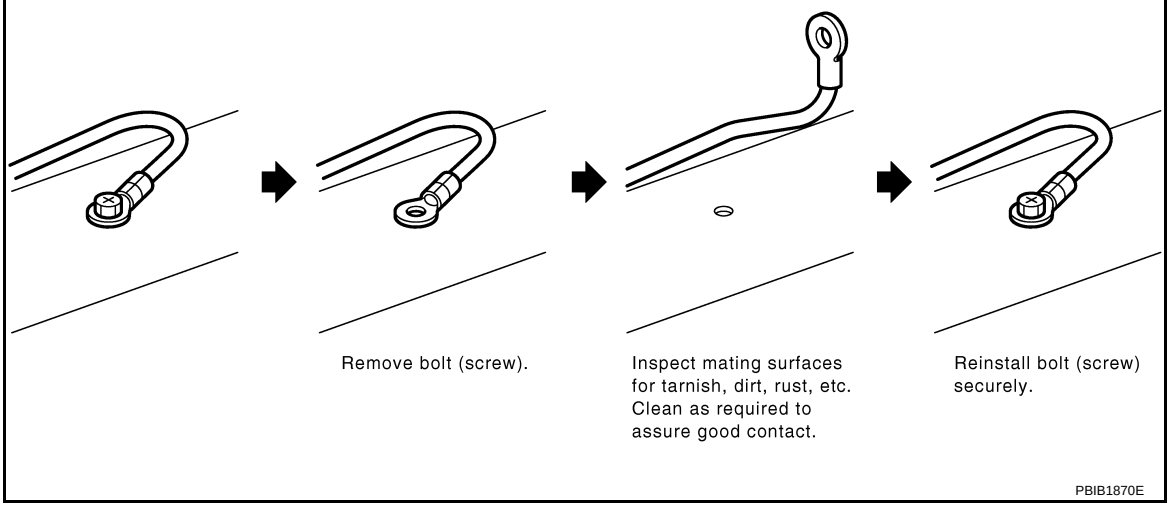

DTC U1000, U1001 CAN COMMUNICATION LINE

Description

INFOID:0000000001717219

CAN (Controller Area Network) is a serial communication line for real time application. It is an on-vehicle multiplex communication line with high data communication speed and excellent error detection ability. Many electronic control units are equipped onto a vehicle, and each control unit shares information and links with other control units during operation (not independent). In CAN communication, control units are connected with 2 communication lines (CAN H line, CAN L line) allowing a high rate of information transmission with less wiring. Each control unit transmits/receives data but selectively reads required data only.

On Board Diagnosis Logic

INFOID:0000000001717220

DTC No.	Trouble diagnosis name	DTC detecting condition	Possible cause
U1000*1 1000*1	CAN communication line	When ECM is not transmitting or receiving CAN communication signal of OBD (emission-related diagnosis) for 2 seconds or more.	• Harness or connectors (CAN communication line is open or shorted)
U1001*2 1001*2		When ECM is not transmitting or receiving CAN communication signal other than OBD (emission-related diagnosis) for 2 seconds or more.	

*1: **This self-diagnosis has the one trip detection logic.**

*2: **The MIL will not light up for this diagnosis.**

DTC Confirmation Procedure

INFOID:0000000001717221

1. Turn ignition switch ON and wait at least 3 seconds.
2. Check 1st trip DTC.
3. If 1st trip DTC is detected, go to EC-140, "Diagnosis Procedure".

Wiring Diagram

INFOID:0000000001717222

EC-CAN-01

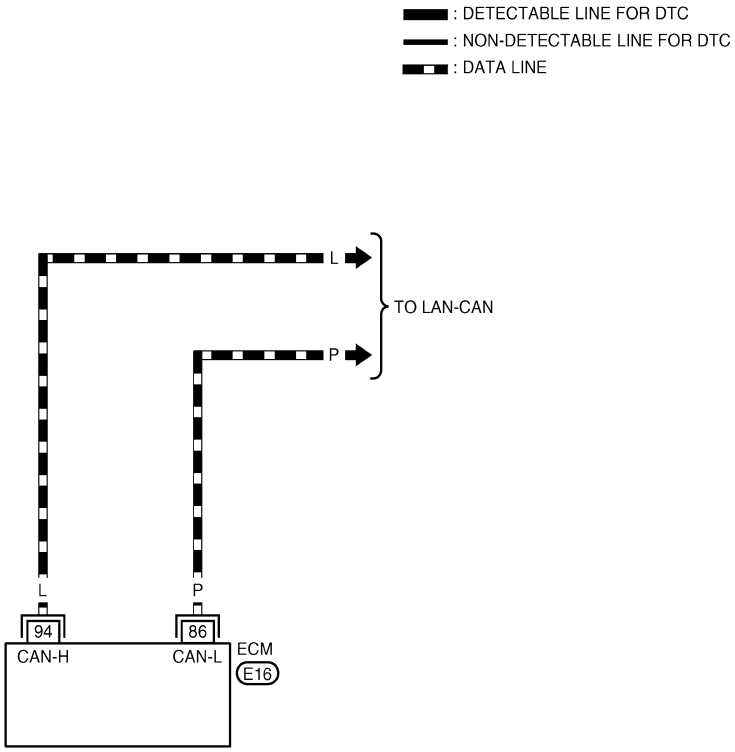

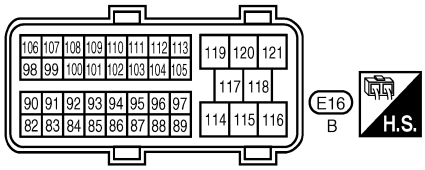

BBWA2502E

Diagnosis Procedure

INFOID:0000000001717223

Go to LAN-38, "CAN Diagnostic Support Monitor".

DTC U1010 CAN COMMUNICATION

Description

INFOID:0000000001717224

CAN (Controller Area Network) is a serial communication line for real time application. It is an on-vehicle multiplex communication line with high data communication speed and excellent error detection ability. Many electronic control units are equipped onto a vehicle, and each control unit shares information and links with other control units during operation (not independent). In CAN communication, control units are connected with 2 communication lines (CAN H line, CAN L line) allowing a high rate of information transmission with less wiring. Each control unit transmits/receives data but selectively reads required data only.

On Board Diagnosis Logic

INFOID:0000000001717225

This self-diagnosis has the one trip detection logic.

DTC No.	Trouble diagnosis name	DTC detecting condition	Possible cause
U1010 1010	CAN communication bus	When detecting error during the initial diagnosis for CAN controller of ECM.	• ECM

DTC Confirmation Procedure

INFOID:0000000001717226

1. Turn ignition switch ON.
2. Check DTC.
3. If DTC is detected, go to EC-141, "Diagnosis Procedure".

Diagnosis Procedure

INFOID:0000000001717227

1. INSPECTION START

With CONSULT-III

1. Turn ignition switch ON.
2. Select “SELF-DIAG RESULTS” mode with CONSULT-III.
3. Touch “ERASE”.
4. **Perform DTC Confirmation Procedure.**
   See EC-141, "DTC Confirmation Procedure".
5. Is the DTC U1010 displayed again?

With GST

1. Turn ignition switch ON.
2. Select Service $04 with GST.
3. **Perform DTC Confirmation Procedure.**
   See EC-141, "DTC Confirmation Procedure".
4. Is the DTC U1010 displayed again?

Yes or No

Yes >> GO TO 2.
No >> **INSPECTION END**

2. REPLACE ECM

1. Replace ECM.
2. Perform initialization of NVIS (NATS) system and registration of all NVIS (NATS) ignition key IDs. Refer to BL-180.
3. Perform EC-72, "VIN Registration".
4. Perform EC-73, "Accelerator Pedal Released Position Learning".
5. Perform EC-73, "Throttle Valve Closed Position Learning".
6. Perform EC-73, "Idle Air Volume Learning".

>> **INSPECTION END**

DTC P0011, P0021 IVT CONTROL

Description

INFOID:0000000001717228

SYSTEM DESCRIPTION

Sensor	Input signal to ECM	ECM function	Actuator
Crankshaft position sensor (POS)	Engine speed and piston position	Intake valve timing control	Intake valve timing control solenoid valve
Camshaft position sensor (PHASE)			
Engine coolant temperature sensor	Engine coolant temperature		
Wheel sensor	Vehicle speed*		

*: Signal is sent to the ECM through CAN communication line.

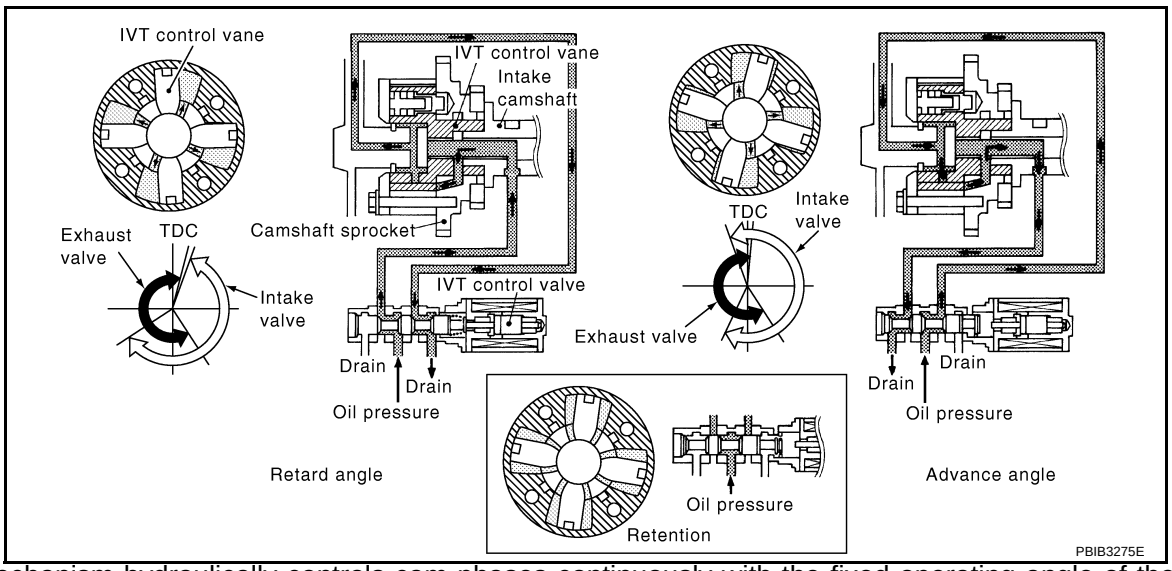

This mechanism hydraulically controls cam phases continuously with the fixed operating angle of the intake valve.
The ECM receives signals such as crankshaft position, camshaft position, engine speed, and engine coolant temperature. Then, the ECM sends ON/OFF pulse duty signals to the intake valve timing control solenoid valve depending on driving status. This makes it possible to control the shut/open timing of the intake valve to increase engine torque in low/mid speed range and output in high-speed range.

CONSULT-III Reference Value in Data Monitor Mode

INFOID:0000000001717229

Specification data are reference values.

MONITOR ITEM	CONDITION		SPECIFICATION
INT/V TIM (B1) INT/V TIM (B2)	• Engine: After warming up • Shift lever: P or N • Air conditioner switch: OFF • No load	Idle	–5° - 5°CA
		2,000 rpm	Approx. 0° - 30°CA
INT/V SOL (B1) INT/V SOL (B2)	• Engine: After warming up • Shift lever: P or N • Air conditioner switch: OFF • No load	Idle	0% - 2%
		2,000 rpm	Approx. 0% - 50%

On Board Diagnosis Logic

INFOID:0000000001717230

DTC No.	Trouble diagnosis name	Detecting condition	Possible cause
P0011 0011 (Bank 1) P0021 0021 (Bank 2)	Intake valve timing control performance	There is a gap between angle of target and phase-control angle degree.	• Crankshaft position sensor (POS) • Camshaft position sensor (PHASE) • Intake valve control solenoid valve • Accumulation of debris to the signal pick-up portion of the camshaft • Timing chain installation • Foreign matter caught in the oil groove for intake valve timing control

FAIL-SAFE MODE

When the malfunction is detected, the ECM enters fail-safe mode.

Detected items	Engine operating condition in fail-safe mode
Intake valve timing control	The signal is not energized to the solenoid valve and the valve control does not function.

DTC Confirmation Procedure

INFOID:0000000001717231

NOTE:
- **If DTC P0011 or P0021 is displayed with DTC P0075 or P0081, first perform trouble diagnosis for DTC P0075 or P0081. Refer to EC-161.**
- If DTC Confirmation Procedure has been previously conducted, always perform the following before conducting the next step.

1. Turn ignition switch OFF and wait at least 10 seconds.
2. Turn ignition switch ON.
3. Turn ignition switch OFF and wait at least 10 seconds.

TESTING CONDITION:
Before performing the following procedure, confirm that battery voltage is between 10V and 16V at idle.

WITH CONSULT-III

1. Turn ignition switch ON and select “DATA MONITOR” mode with CONSULT-III.
2. Start engine and warm it up to the normal operating temperature.
3. Maintain the following conditions for at least 6 consecutive seconds.
   Hold the accelerator pedal as steady as possible.

ENG SPEED	1,200 - 2,000 rpm
COOLAN TEMP/S	More than 60°C (140°F)
B/FUEL SCHDL	More than 3.4 msec
Shift lever	P or N position

4. Let engine idle for 10 seconds.
5. Check 1st trip DTC.
6. If 1st trip DTC is detected, go to EC-144, "Diagnosis Procedure".
   If 1st trip DTC is not detected, go to next step.
7. Maintain the following conditions for at least 20 consecutive seconds.

ENG SPEED	1,700 - 3,175 rpm (A constant rotation is maintained.)
COOLAN TEMP/S	70 - 105°C (158 - 221°F)
Shift lever	1st or 2nd position
Driving location uphill	Driving vehicle uphill (Increased engine load will help maintain the driving conditions required for this test.)

8. Check 1st trip DTC.
9. If 1st trip DTC is detected, go to EC-144, "Diagnosis Procedure".

WITH GST

Follow the procedure “WITH CONSULT-III” above.

Diagnosis Procedure

INFOID:0000000001717232

1. CHECK OIL PRESSURE WARNING LAMP

1. Start engine.
2. Check oil pressure warning lamp and confirm it is not illuminated.

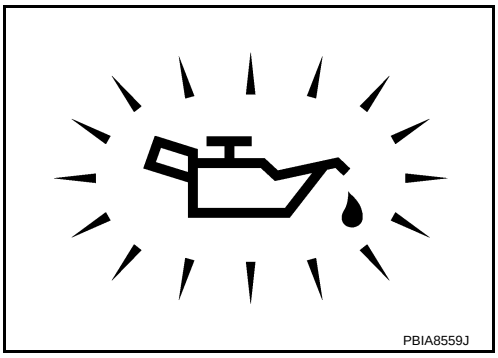

OK or NG

OK >> GO TO 2.
KG >> Go to LU-8, "Inspection".

2. CHECK INTAKE VALVE TIMING CONTROL SOLENOID VALVE

Refer to EC-145, "Component Inspection".

OK or NG

OK >> GO TO 3.
NG >> Replace intake valve timing control solenoid valve.

3. CHECK CRANKSHAFT POSITION SENSOR (POS)

Refer to EC-324, "Component Inspection".

OK or NG

OK >> GO TO 4.
NG >> Replace crankshaft position sensor (POS).

4. CHECK CAMSHAFT POSITION SENSOR (PHASE)

Refer to EC-332, "Component Inspection".

OK or NG

OK >> GO TO 5.
NG >> Replace camshaft position sensor (PHASE).

5. CHECK CAMSHAFT (INTAKE)

Check the following.
- Accumulation of debris to the signal plate of camshaft rear end
- Chipping signal plate of camshaft rear end

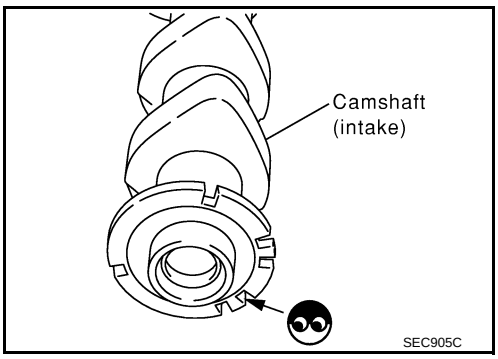

OK or NG

OK >> GO TO 6.
NG >> Remove debris and clean the signal plate of camshaft rear end or replace camshaft.

6. CHECK TIMING CHAIN INSTALLATION

Check service records for any recent repairs that may cause timing chain misaligned.

Are there any service records that may cause timing chain misaligned?

Yes or No

Yes >> Check timing chain installation. Refer to EM-54.
No >> GO TO 7.

7. CHECK LUBRICATION CIRCUIT

Refer to EM-84, "Inspection After Installation".

OK or NG

OK >> GO TO 8.
NG >> Clean lubrication line.

8. CHECK INTERMITTENT INCIDENT

Refer to EC-130.
For Wiring Diagram, refer to EC-320 for CKP sensor (POS) and EC-326 for CMP sensor (PHASE).

>> **INSPECTION END**

Component Inspection

INFOID:0000000001717233

INTAKE VALVE TIMING CONTROL SOLENOID VALVE

1. Disconnect intake valve timing control solenoid valve harness connector.
2. Check resistance between intake valve timing control solenoid valve as follows.

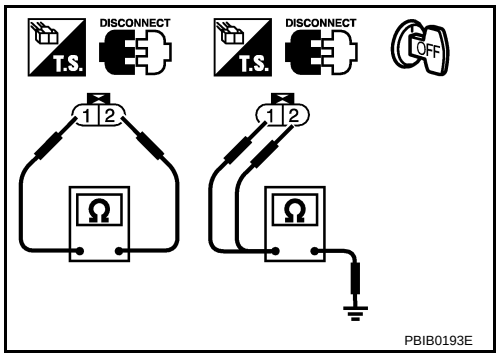

Terminal	Resistance
1 and 2	7.0 - 7.5Ω [at 20°C (68°F)]
1 or 2 and ground	∞Ω (Continuity should not exist.)

If NG, replace intake valve timing control solenoid valve.
If OK, go to next step.

3. Remove intake valve timing control solenoid valve.
4. Provide 12V DC between intake valve timing control solenoid valve terminals and then interrupt it. Make sure that the plunger moves as shown in the figure.
CAUTION:
Do not apply 12V DC continuously for 5 seconds or more. Doing so may result in damage to the coil in intake valve timing control solenoid valve.
If NG, replace intake valve timing control solenoid valve.
NOTE:
Always replace O-ring when intake valve timing control solenoid valve is removed.

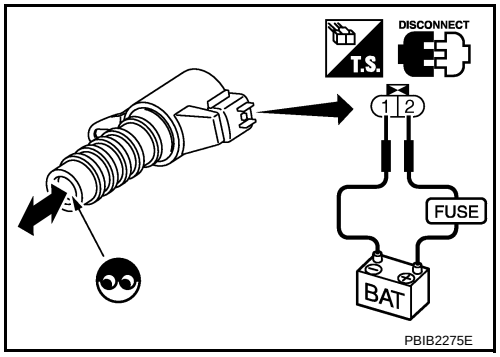

Removal and Installation

INFOID:0000000001717234

INTAKE VALVE TIMING CONTROL SOLENOID VALVE

Refer to EM-54.

DTC P0031, P0032, P0051, P0052 A/F SENSOR 1 HEATER

Description

INFOID:0000000001717235

SYSTEM DESCRIPTION

Sensor	Input Signal to ECM	ECM function	Actuator
Camshaft position sensor (PHASE) Crankshaft position sensor (POS)	Engine speed	Air fuel ratio (A/F) sensor 1 heater control	Air fuel ratio (A/F) sensor 1 heater
Mass air flow sensor	Amount of intake air		

The ECM performs ON/OFF duty control of the A/F sensor 1 heater corresponding to the engine operating condition to keep the temperature of A/F sensor 1 element at the specified range.

CONSULT-III Reference Value in Data Monitor Mode

INFOID:0000000001717236

Specification data are reference values.

MONITOR ITEM	CONDITION	SPECIFICATION
A/F S1 HTR (B1) A/F S1 HTR (B2)	• Engine: After warming up, idle the engine	0 - 100%

On Board Diagnosis Logic

INFOID:0000000001717237

DTC No.	Trouble diagnosis name	DTC detecting condition	Possible cause
P0031 0031 (Bank 1) P0051 0051 (Bank 2)	Air fuel ratio (A/F) sensor 1 heater control circuit low	The current amperage in the air fuel ratio (A/F) sensor 1 heater circuit is out of the normal range. (An excessively low voltage signal is sent to ECM through the air fuel ratio (A/F) sensor 1 heater.)	• Harness or connectors (The A/F sensor 1 heater circuit is open or shorted.) • A/F sensor 1 heater
P0032 0032 (Bank 1) P0052 0052 (Bank 2)	Air fuel ratio (A/F) sensor 1 heater control circuit high	The current amperage in the air fuel ratio (A/F) sensor 1 heater circuit is out of the normal range. (An excessively high voltage signal is sent to ECM through the air fuel ratio (A/F) sensor 1 heater.)	• Harness or connectors (The A/F sensor 1 heater circuit is shorted.) • A/F sensor 1 heater

DTC Confirmation Procedure

INFOID:0000000001717238

NOTE:
If DTC Confirmation Procedure has been previously conducted, always perform the following before conducting the next step.
1. Turn ignition switch OFF and wait at least 10 seconds.
2. Turn ignition switch ON.
3. Turn ignition switch OFF and wait at least 10 seconds.

TESTING CONDITION:
Before performing the following procedure, confirm that battery voltage is between 10.5V and 16V at idle.

With CONSULT-III
1. Start engine and let it idle for at least 10 seconds.
2. Check 1st trip DTC.
3. If 1st trip DTC is detected, go to EC-150, "Diagnosis Procedure".

Wiring Diagram

INFOID:0000000001717239

BANK 1

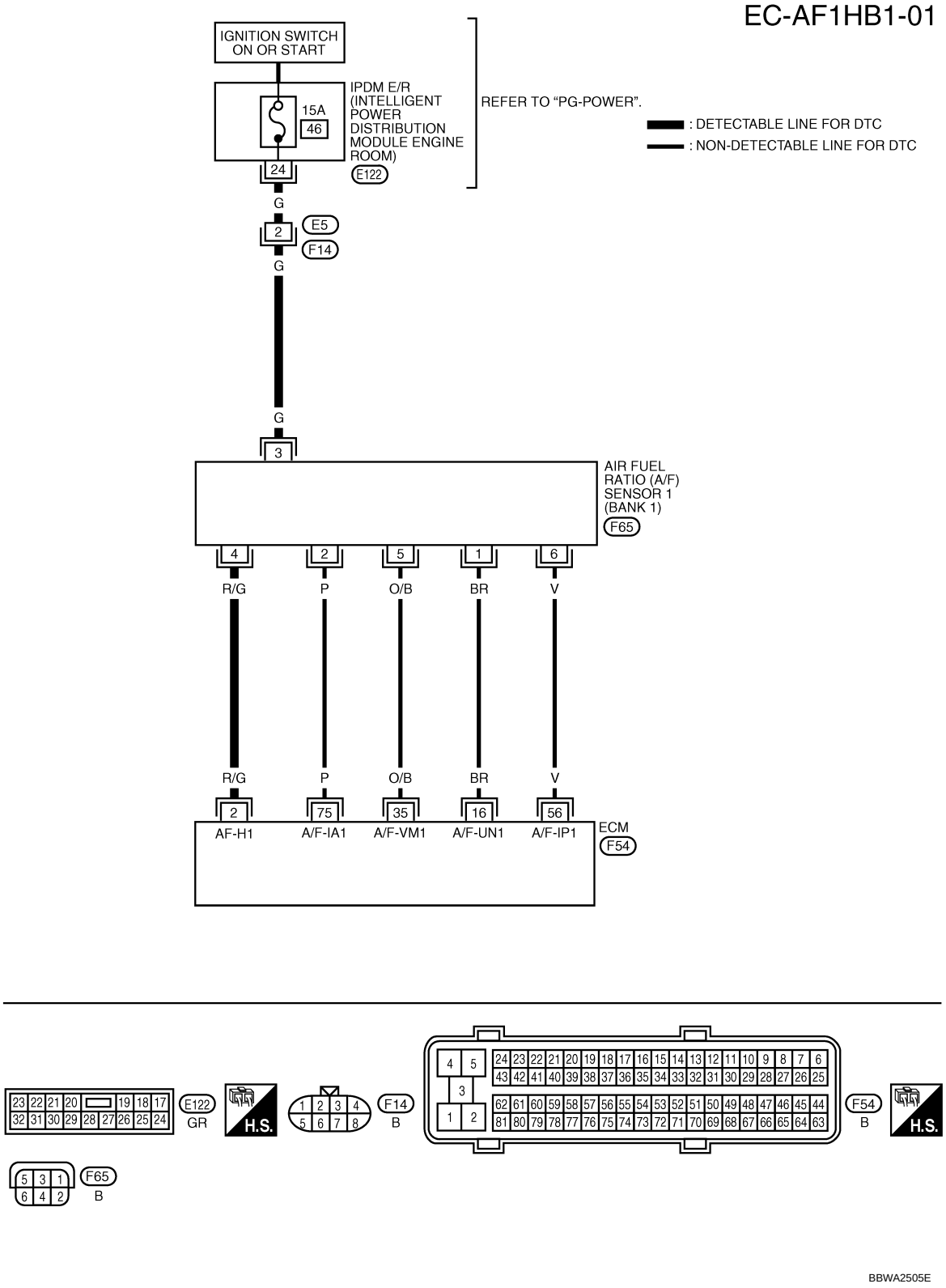

Specification data are reference values and are measured between each terminal and ground.
Pulse signal is measured by CONSULT-III.

CAUTION:

Do not use ECM ground terminals when measuring input/output voltage. Doing so may result in damage to the ECM's transistor. Use a ground other than ECM terminals, such as the ground.

TERMINAL NO.	WIRE COLOR	ITEM	CONDITION	DATA (DC Voltage)
2	R/G	A/F sensor 1 heater (Bank 1)	**[Engine is running]** • **Warm-up condition** • Idle speed	Approximately 5V★ 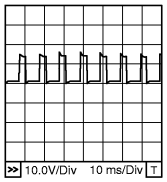 PBIB1584E
16	BR	A/F sensor 1 (Bank 1)	**[Engine is running]** • **Warm-up condition** • Idle speed	Approximately 3.1V
35	O/B			Approximately 2.6V
56	V			Approximately 2.3V
75	P			Approximately 2.3V

★: Average voltage for pulse signal (Actual pulse signal can be confirmed by oscilloscope.)

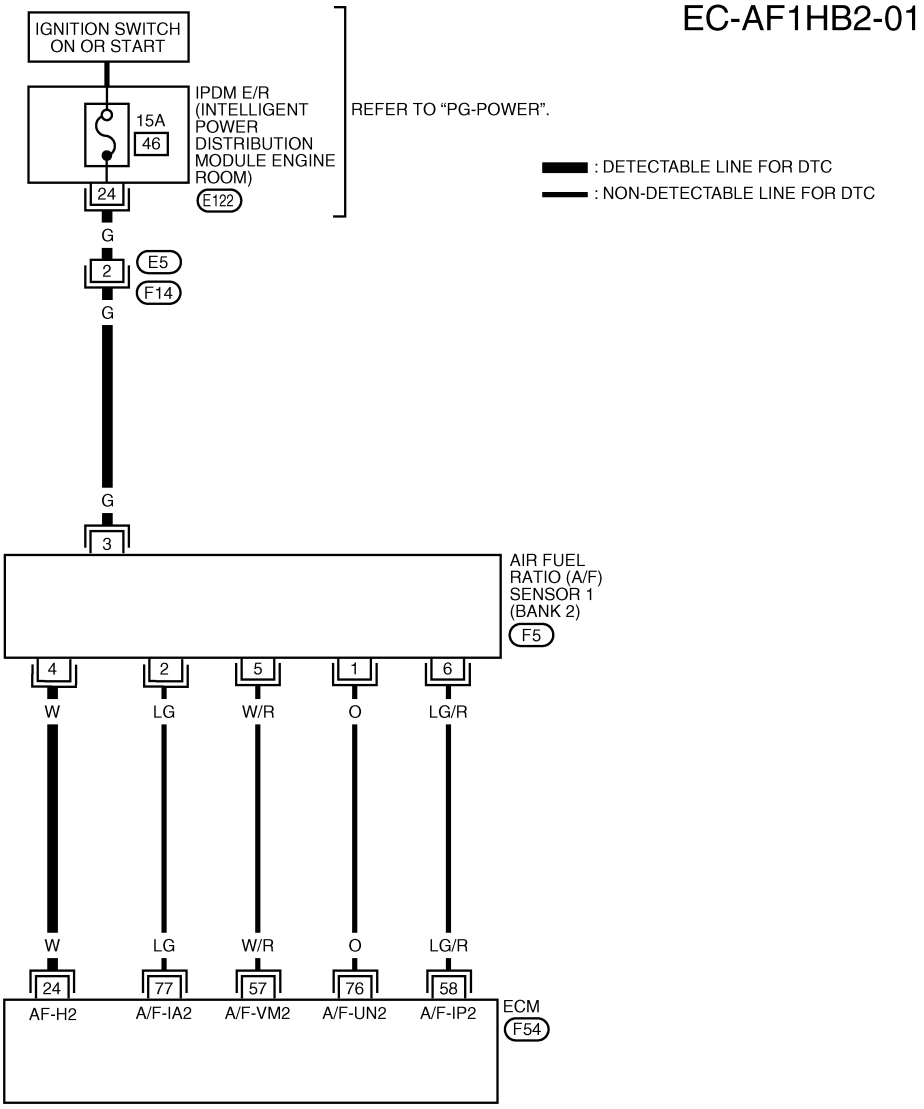

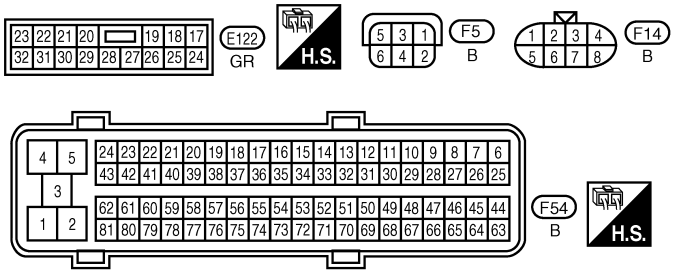

BBWA2506E

Specification data are reference values and are measured between each terminal and ground.
Pulse signal is measured by CONSULT-III.

CAUTION:

Do not use ECM ground terminals when measuring input/output voltage. Doing so may result in damage to the ECM's transistor. Use a ground other than ECM terminals, such as the ground.

TERMINAL NO.	WIRE COLOR	ITEM	CONDITION	DATA (DC Voltage)
24	W	A/F sensor 1 heater (Bank 2)	**[Engine is running]** • **Warm-up condition** • Idle speed	Approximately 5V★ 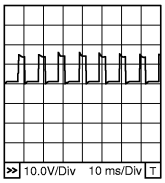 PBIB1584E
57	W/R	A/F sensor 1 (Bank 2)	**[Engine is running]** • **Warm-up condition** • Idle speed	Approximately 2.6V
58	LG/R			Approximately 2.3V
76	O			Approximately 3.1V
77	LG			Approximately 2.3V

★: Average voltage for pulse signal (Actual pulse signal can be confirmed by oscilloscope.)

Diagnosis Procedure

INFOID:0000000001717240

1. CHECK GROUND CONNECTIONS

1. Turn ignition switch OFF.
2. Loosen and retighten three ground screws on the body. Refer to EC-138, "Ground Inspection".

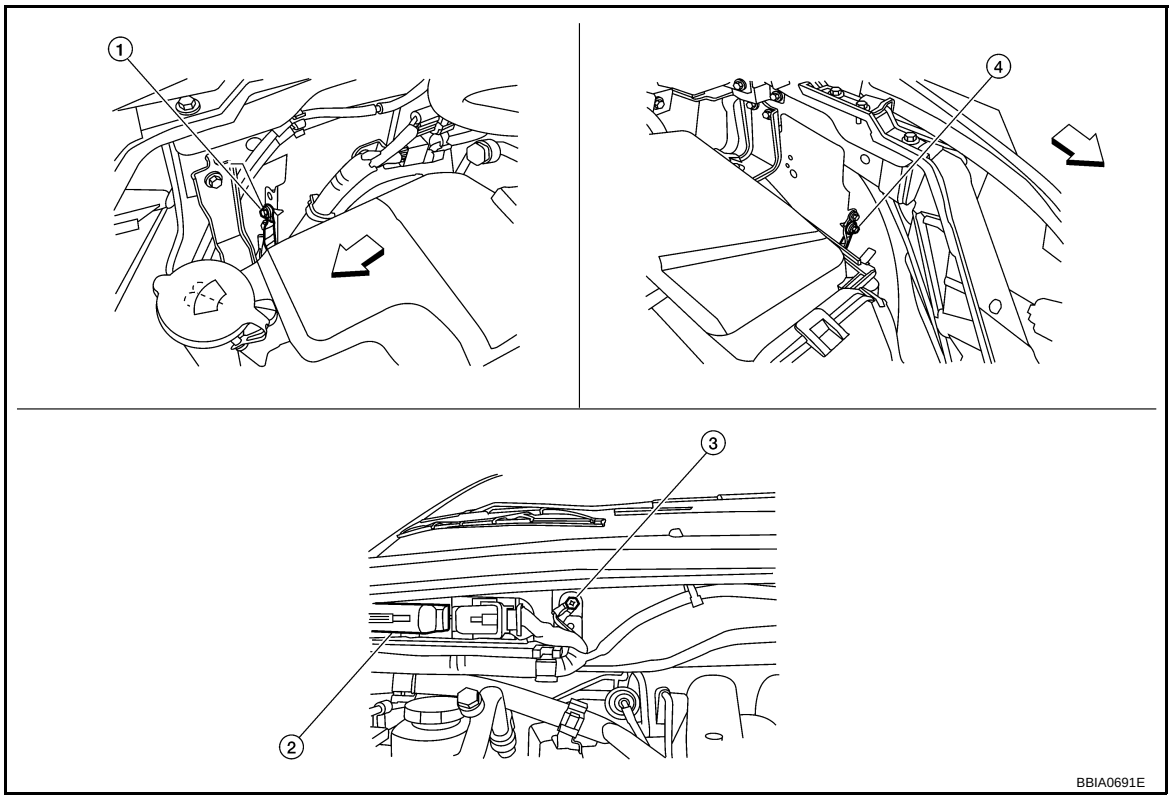

⇦: Vehicle front

1. Body ground E24
2. ECM
3. Body ground E9
4. Body ground E15

OK or NG

OK >> GO TO 2.
NG >> Repair or replace ground connections.

2. CHECK AIR FUEL RATIO (A/F) SENSOR 1 POWER SUPPLY CIRCUIT

1. Disconnect air fuel ratio (A/F) sensor 1 harness connector.

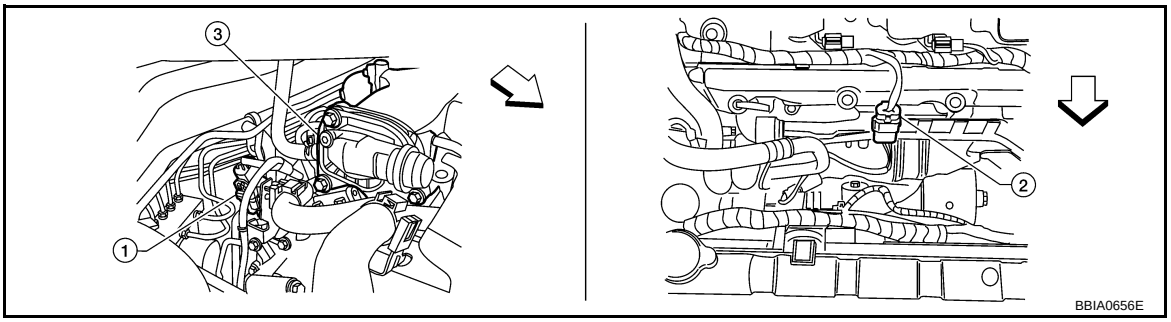

⇦: Vehicle front

1. Air fuel ratio (A/F) sensor 1 (bank 1) harness connector
2. Air fuel ratio (A/F) sensor 1 (bank 2) harness connector
3. Intake manifold collector

2. Turn ignition switch ON.
3. Check voltage between A/F sensor 1 terminal 3 and ground with CONSULT-III or tester.

Voltage: Battery voltage

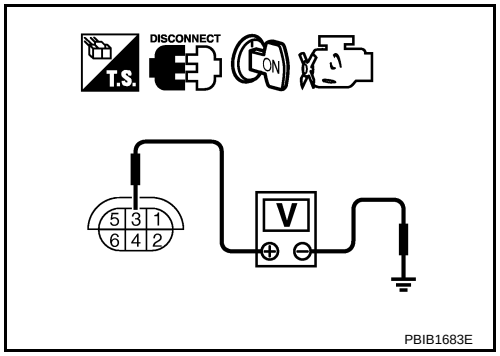

OK or NG

OK >> GO TO 4.
NG >> GO TO 3.

3. DETECT MALFUNCTIONING PART

Check the following.
- Harness connectors E5, F14
- IPDM E/R harness connector E122
- 15A fuse
- Harness for open or short between A/F sensor 1 and fuse

>> Repair or replace harness or connectors.

4. CHECK A/F SENSOR 1 HEATER OUTPUT SIGNAL CIRCUIT

1. Turn ignition switch OFF.
2. Disconnect ECM harness connector.
3. Check harness continuity between ECM terminal 2 (bank 1) or 24 (bank 2) and A/F sensor 1 terminal 4. Refer to Wiring Diagram.

Continuity should exist.

4. Also check harness for short to ground and short to power.

OK or NG

OK >> GO TO 5.
NG >> Repair open circuit or short to ground or short to power in harness or connectors.

5. CHECK A/F SENSOR 1 HEATER

Refer to EC-152, "Component Inspection".

OK or NG

OK >> GO TO 6.
NG >> GO TO 7.

6. CHECK INTERMITTENT INCIDENT

Perform EC-130.

OK or NG

OK >> GO TO 7.
NG >> Repair or replace.

7. REPLACE AIR FUEL RATIO (A/F) SENSOR 1

Replace malfunctioning air fuel ratio (A/F) sensor 1.

CAUTION:

- **Discard any air fuel ratio (A/F) sensor which has been dropped from a height of more than 0.5 m (19.7 in) onto a hard surface such as a concrete floor; use a new one.**
- **Before installing new air fuel ratio (A/F) sensor, clean exhaust system threads using Heated Oxygen Sensor Thread Cleaner tool J-43897-18 or J-43897-12 and approved anti-seize lubricant.**

>> **INSPECTION END**

Component Inspection

INFOID:0000000001717241

AIR FUEL RATIO (A/F) SENSOR 1 HEATER

Check resistance between terminals 3 and 4.

Resistance: 2.3 - 4.3Ω [at 25°C (77°F)]

Check continuity between terminals 3 and 1, 2, 5, 6, terminals 4 and 1, 2, 5, 6.

Continuity should not exist.

If NG, replace the A/F sensor 1.

CAUTION:

- **Discard any A/F sensor which has been dropped from a height of more than 0.5 m (19.7 in) onto a hard surface such as a concrete floor; use a new one.**
- **Before installing new A/F sensor, clean exhaust system threads using Heated Oxygen Sensor Thread Cleaner tool J-43897-18 or J-43897-12 and approved anti-seize lubricant.**

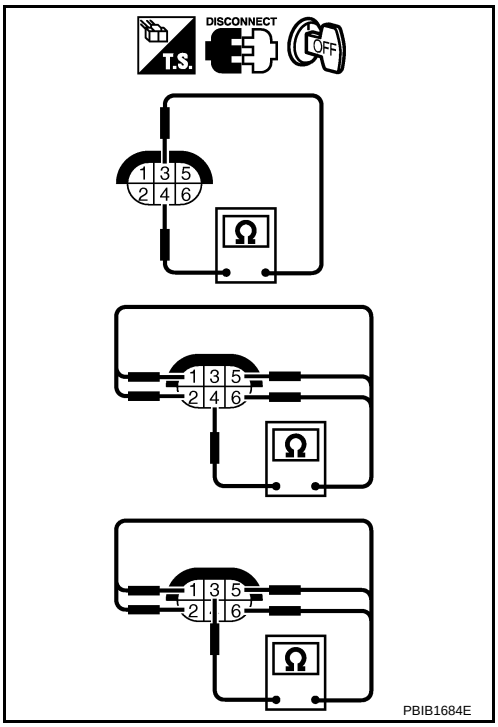

Removal and Installation

INFOID:0000000001717242

AIR FUEL RATIO (A/F) SENSOR 1

Refer to EM-25.

DTC P0037, P0038, P0057, P0058 HO2S2 HEATER

Description

INFOID:0000000001717243

SYSTEM DESCRIPTION

Sensor	Input signal to ECM	ECM function	Actuator
Camshaft position sensor (PHASE)	Engine speed	Heated oxygen sensor 2 heater control	Heated oxygen sensor 2 heater
Crankshaft position sensor (POS)			
Engine coolant temperature sensor	Engine coolant temperature		
Mass air flow sensor	Amount of intake air		

The ECM performs ON/OFF control of the heated oxygen sensor 2 heater corresponding to the engine speed, amount of intake air and engine coolant temperature.

OPERATION

Engine speed rpm	Heated oxygen sensor 2 heater
Above 3,600	OFF
Below 3,600 rpm after the following conditions are met. • Engine: After warming up • Keeping the engine speed between 3,500 and 4,000 rpm for 1 minute and at idle for 1 minute under no load	ON

CONSULT-III Reference Value in Data Monitor Mode

INFOID:0000000001717244

Specification data are reference values.

MONITOR ITEM	CONDITION	SPECIFICATION
HO2S2 HTR (B1) HO2S2 HTR (B2)	• Engine speed: Above 3,600 rpm	OFF
	• Engine speed: Below 3,600 rpm after the following conditions are met - Engine: After warming up - Keeping the engine speed between 3,500 and 4,000 rpm for 1 minute and at idle for 1 minute under no load	ON

On Board Diagnosis Logic

INFOID:0000000001717245

DTC No.	Trouble diagnosis name	DTC detecting condition	Possible cause
P0037 0037 (Bank 1)	Heated oxygen sensor 2 heater control circuit low	The current amperage in the heated oxygen sensor 2 heater circuit is out of the normal range. (An excessively low voltage signal is sent to ECM through the heated oxygen sensor 2 heater.)	• Harness or connectors (The heated oxygen sensor 2 heater circuit is open or shorted.) • Heated oxygen sensor 2 heater
P0057 0057 (Bank 2)			
P0038 0038 (Bank 1)	Heated oxygen sensor 2 heater control circuit high	The current amperage in the heated oxygen sensor 2 heater circuit is out of the normal range. (An excessively high voltage signal is sent to ECM through the heated oxygen sensor 2 heater.)	• Harness or connectors (The heated oxygen sensor 2 heater circuit is shorted.) • Heated oxygen sensor 2 heater
P0058 0058 (Bank 2)			

DTC Confirmation Procedure

INFOID:0000000001717246

NOTE:
If DTC Confirmation Procedure has been previously conducted, always perform the following before conducting the next step.
1. Turn ignition switch OFF and wait at least 10 seconds.
2. Turn ignition switch ON.

3. Turn ignition switch OFF and wait at least 10 seconds.

TESTING CONDITION:

Before performing the following procedure, confirm that battery voltage is between 10.5V and 16V at idle.

1. Start engine and warm it up to the normal operating temperature.
2. Turn ignition switch OFF and wait at least 10 seconds.
3. Turn ignition switch ON.
4. Turn ignition switch OFF and wait at least 10 seconds.
5. Start the engine and keep the engine speed between 3,500 rpm and 4,000 rpm for at least 1 minute under no load.
6. Let engine idle for 1 minute.
7. Check 1st trip DTC.
8. If 1st trip DTC is detected, go to EC-158, "Diagnosis Procedure".

Wiring Diagram

INFOID:0000000001717247

BANK 1

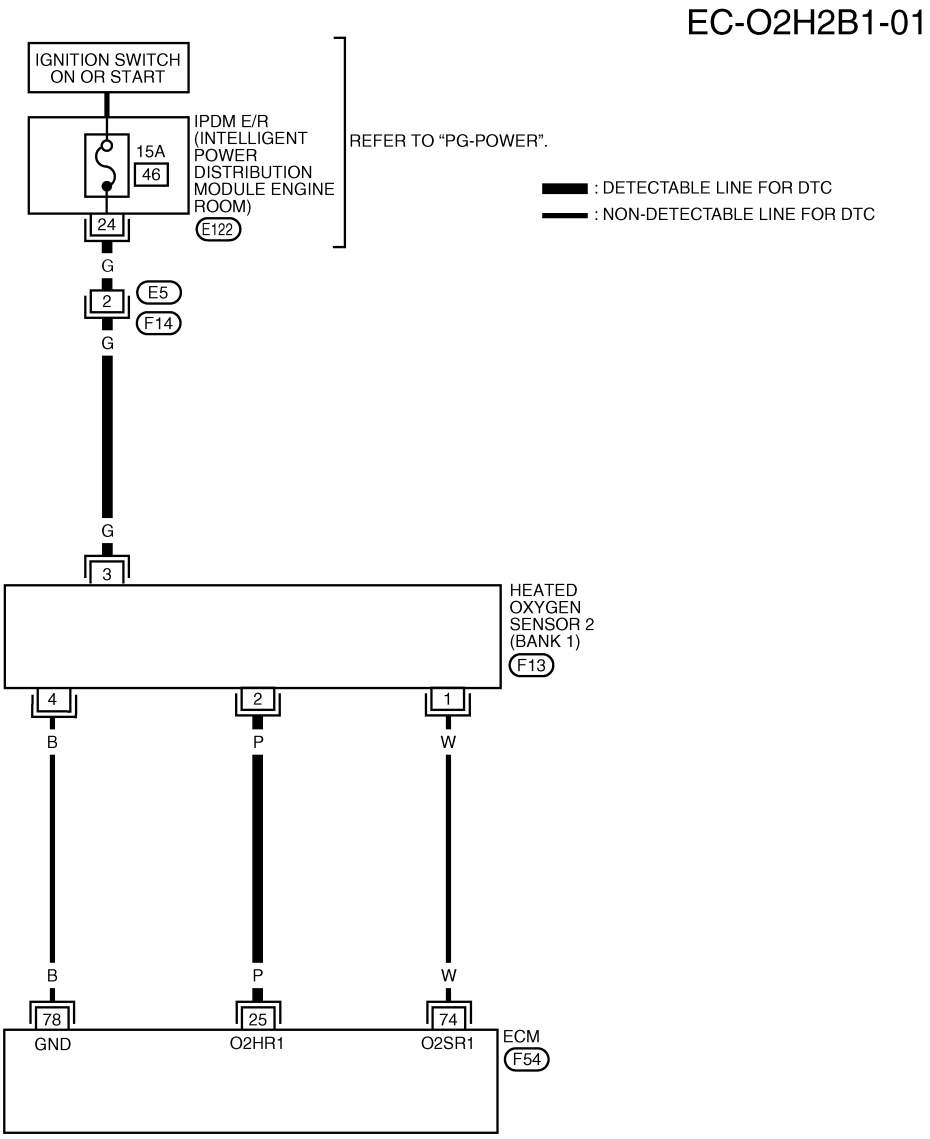

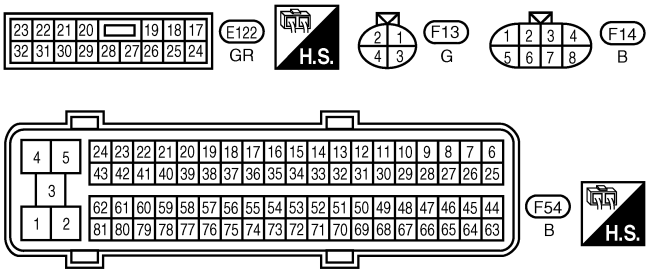

BBWA2507E

Specification data are reference values and are measured between each terminal and ground.

CAUTION:

Do not use ECM ground terminals when measuring input/output voltage. Doing so may result in damage to the ECM's transistor. Use a ground other than ECM terminals, such as the ground.

TER-MI-NAL NO.	WIRE COLOR	ITEM	CONDITION	DATA (DC Voltage)
25	P	Heated oxygen sensor 2 heater (bank 1)	**[Engine is running]** • Engine speed: Below 3,600 rpm after the following conditions are met. - Engine: After warming up - Keeping the engine speed between 3,500 and 4,000 rpm for 1 minute and at idle for 1 minute under no load.	0 - 1.0V
			[Ignition switch: ON] • Engine stopped **[Engine is running]** • Engine speed: Above 3,600 rpm.	BATTERY VOLTAGE (11 - 14V)
74	W	Heated oxygen sensor 2 (Bank 1)	**[Engine is running]** • Revving engine from idle to 3,000 rpm quickly after the following conditions are met - Engine: After warming up - Keeping the engine speed between 3,500 and 4,000 rpm for 1 minute and at idle for 1 minute under no load	0 - Approximately 1.0V
78	B	Heated oxygen sensor 2 ground	**[Engine is running]** • **Warm-up condition** • Idle speed	Approximately 0V

EC-O2H2B2-01

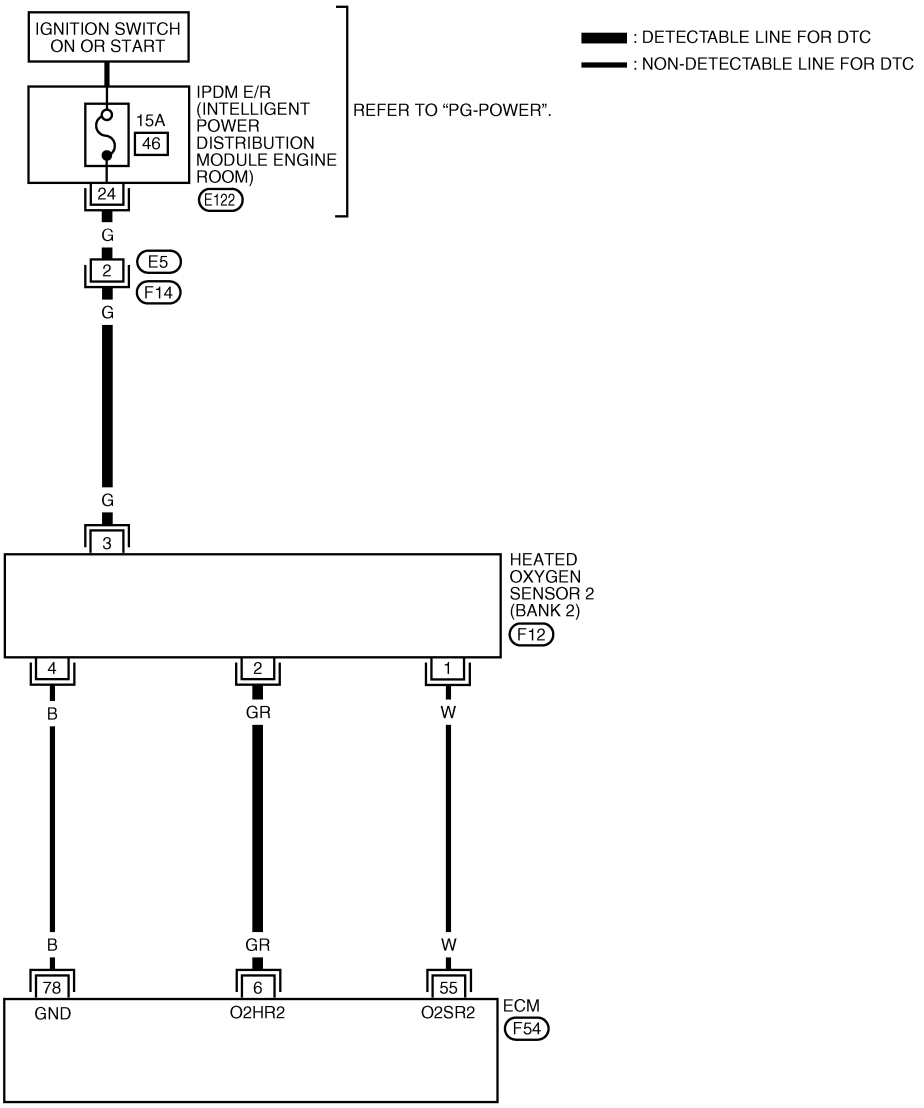

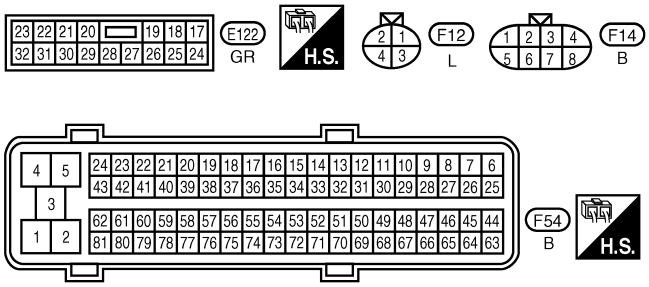

BBWA2508E

Specification data are reference values and are measured between each terminal and ground.

CAUTION:

Do not use ECM ground terminals when measuring input/output voltage. Doing so may result in damage to the ECM's transistor. Use a ground other than ECM terminals, such as the ground.

TER-MI-NAL NO.	WIRE COLOR	ITEM	CONDITION	DATA (DC Voltage)
6	GR	Heated oxygen sensor 2 heater (bank 2)	**[Engine is running]** • Engine speed: Below 3,600 rpm after the following conditions are met. - Engine: After warming up - Keeping the engine speed between 3,500 and 4,000 rpm for 1 minute and at idle for 1 minute under no load.	0 - 1.0V
			[Ignition switch: ON] • Engine stopped **[Engine is running]** • Engine speed: Above 3,600 rpm.	BATTERY VOLTAGE (11 - 14V)
55	W	Heated oxygen sensor 2 (Bank 2)	**[Engine is running]** • Revving engine from idle to 3,000 rpm quickly after the following conditions are met - Engine: After warming up - Keeping the engine speed between 3,500 and 4,000 rpm for 1 minute and at idle for 1 minute under no load	0 - Approximately 1.0V
78	B	Heated oxygen sensor 2 ground	**[Engine is running]** • **Warm-up condition** • Idle speed	Approximately 0V

Diagnosis Procedure

INFOID:0000000001717248

1. CHECK GROUND CONNECTIONS

1. Turn ignition switch OFF.
2. Loosen and retighten three ground screws on the body. Refer to EC-138, "Ground Inspection".

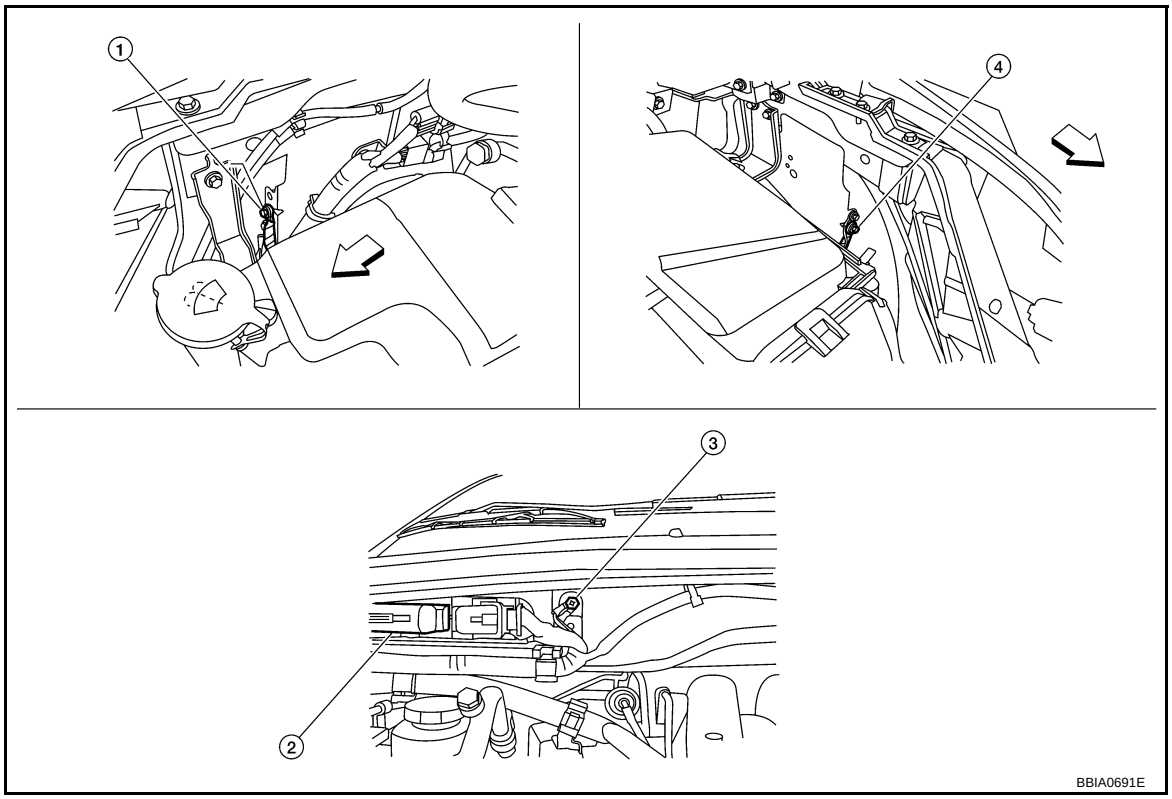

⇦ Vehicle front

1. Body ground E24
2. ECM
3. Body ground E9
4. Body ground E15

OK or NG

OK >> GO TO 2.
NG >> Repair or replace ground connections.

2. CHECK HO2S2 HEATER POWER SUPPLY CIRCUIT

1. Disconnect heated oxygen sensor 2 harness connector.
- Oil pan (1)
- Heated oxygen sensor 2 (bank 2) harness connector (2)
- Heated oxygen sensor 2 (bank 1) harness connector (3)
2. Turn ignition switch ON.

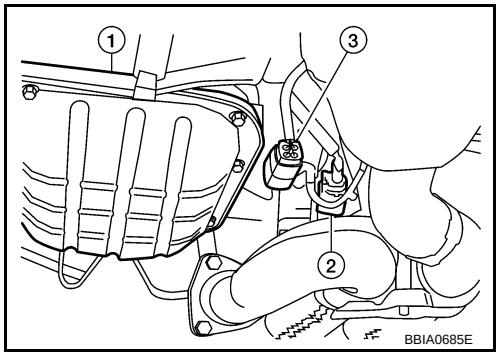

3. Check voltage between HO2S2 terminal 3 and ground with CONSULT-III or tester.

Voltage: Battery voltage

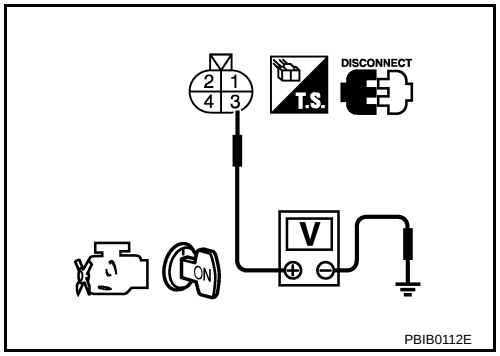

OK or NG

OK >> GO TO 4.
NG >> GO TO 3.

3. DETECT MALFUNCTIONING PART

Check the following.
- Harness connectors E5, F14
- IPDM E/R connector E122
- 15A fuse
- Harness for open or short between heated oxygen sensor 2 and fuse

>> Repair harness or connectors.

4. CHECK HO2S2 HEATER OUTPUT SIGNAL CIRCUIT FOR OPEN AND SHORT

1. Turn ignition switch OFF.
2. Disconnect ECM harness connector.
3. Check harness continuity between ECM terminal and HO2S2 terminal as follows. Refer to Wiring Diagram.

DTC	Terminals		Bank
	ECM	Sensor	
P0037, P0038	25	2	1
P0057, P0058	6	2	2

Continuity should exist.

4. Also check harness for short to ground and short to power.

OK or NG

OK >> GO TO 5.
NG >> Repair open circuit or short to ground or short to power in harness or connectors.

5. CHECK HEATED OXYGEN SENSOR 2 HEATER

Refer to EC-160, "Component Inspection".

OK or NG

OK >> GO TO 6.
NG >> Replace malfunctioning heated oxygen sensor 2.

6. CHECK INTERMITTENT INCIDENT

Refer to EC-130.

>> **INSPECTION END**

Component Inspection

INFOID:0000000001717249

HEATED OXYGEN SENSOR 2 HEATER

1. Check resistance between HO2S2 terminals as follows.

Terminal No.	Resistance
2 and 3	5.0 - 7.0 Ω [at 25°C (77°F)]
1 and 2, 3, 4	∞ Ω (Continuity should not exist)
4 and 1, 2, 3	

2. If NG, replace heated oxygen sensor 2.

CAUTION:

- **Discard any heated oxygen sensor which has been dropped from a height of more than 0.5 m (19.7 in) onto a hard surface such as a concrete floor; use a new one.**
- **Before installing new oxygen sensor, clean exhaust system threads using Oxygen Sensor Thread Cleaner tool J-43897-18 or J-43897-12 and approved anti-seize lubricant.**

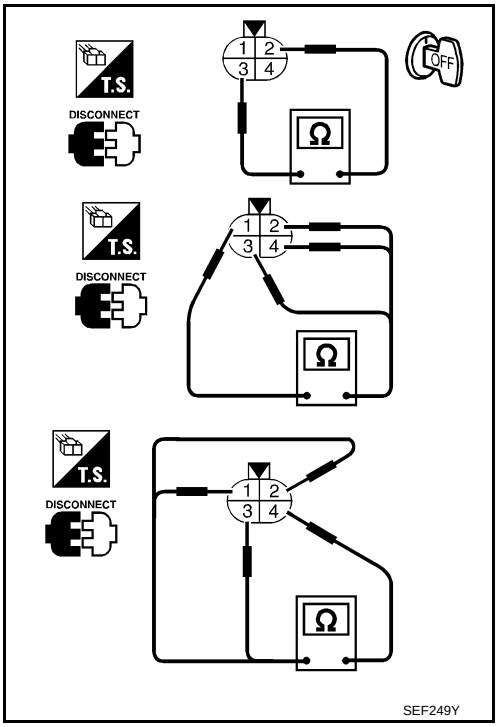

Removal and Installation

INFOID:0000000001717250

HEATED OXYGEN SENSOR 2

Refer to EM-25.

DTC P0075, P0081 IVT CONTROL SOLENOID VALVE

Component Description

INFOID:0000000001717251

Intake valve timing control solenoid valve is activated by ON/OFF pulse duty (ratio) signals from the ECM.
The intake valve timing control solenoid valve changes the oil amount and direction of flow through intake valve timing control unit or stops oil flow.
The longer pulse width advances valve angle.
The shorter pulse width retards valve angle.
When ON and OFF pulse widths become equal, the solenoid valve stops oil pressure flow to fix the intake valve angle at the control position.

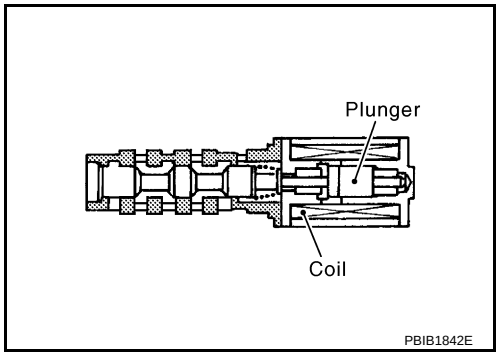

CONSULT-III Reference Value in Data Monitor Mode

INFOID:0000000001717252

Specification data are reference values.

MONITOR ITEM	CONDITION		SPECIFICATION
INT/V SOL (B1) INT/V SOL (B2)	• Engine: After warming up • Shift lever: P or N • Air conditioner switch: OFF • No load	Idle	0% - 2%
		2,000 rpm	Approx. 0% - 50%

On Board Diagnosis Logic

INFOID:0000000001717253

DTC No.	Trouble diagnosis name	DTC detecting condition	Possible cause
P0075 0075 (Bank 1)	Intake valve timing control solenoid valve circuit	An improper voltage is sent to the ECM through intake valve timing control solenoid valve.	• Harness or connectors (Intake valve timing control solenoid valve circuit is open or shorted.) • Intake valve timing control solenoid valve
P0081 0081 (Bank 2)			

DTC Confirmation Procedure

INFOID:0000000001717254

1. If DTC Confirmation Procedure has been previously conducted, always perform the following before conducting the next step.

a. Turn ignition switch OFF and wait at least 10 seconds.
b. Turn ignition switch ON.
c. Turn ignition switch OFF and wait at least 10 seconds.

2. Start engine and let it idle for 5 seconds.
3. Check 1st trip DTC.
4. If 1st trip DTC is detected, go to EC-165, "Diagnosis Procedure".

Wiring Diagram

INFOID:0000000001717255

BANK 1

EC-IVCB1-01

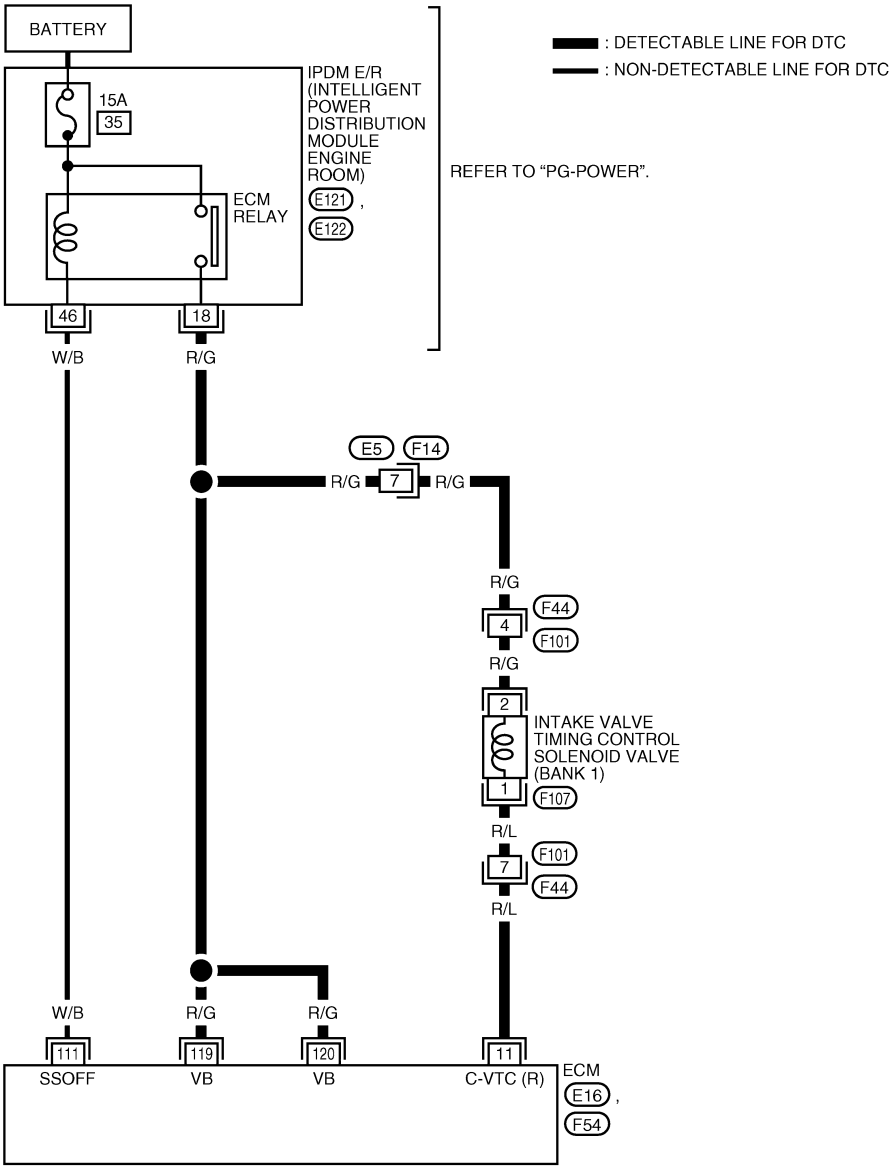

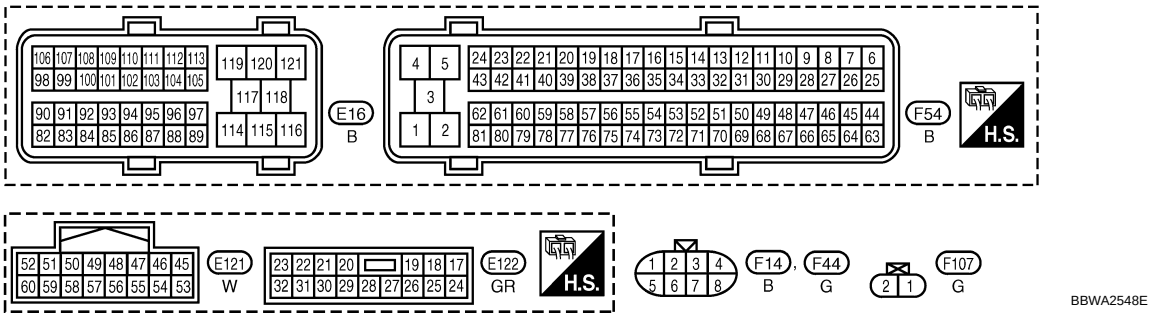

Specification data are reference values and are measured between each terminal and ground.
Pulse signal is measured by CONSULT-III.

CAUTION:

Do not use ECM ground terminals when measuring input/output voltage. Doing so may result in damage to the ECM's transistor. Use a ground other than ECM terminals, such as the ground.

TERMINAL NO.	WIRE COLOR	ITEM	CONDITION	DATA (DC Voltage)
11	R/L	Intake valve timing control solenoid valve (Bank 1)	**[Engine is running]** • **Warm-up condition** • Idle speed	BATTERY VOLTAGE (11 - 14V)
			[Engine is running] • **Warm-up condition** • Engine speed: 2,000 rpm	7 - 12V★ 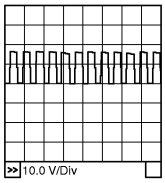 PBIB1790E
111	W/B	ECM relay (Self shut-off)	**[Engine is running]** **[Ignition switch: OFF]** • For a few seconds after turning ignition switch OFF	0 - 1.5V
			[Ignition switch: OFF] • More than a few seconds after turning ignition switch OFF	BATTERY VOLTAGE (11 - 14V)
119 120	R/G R/G	Power supply for ECM	**[Ignition switch: ON]**	BATTERY VOLTAGE (11 - 14V)

★: Average voltage for pulse signal (Actual pulse signal can be confirmed by oscilloscope.)

EC-IVCB2-01

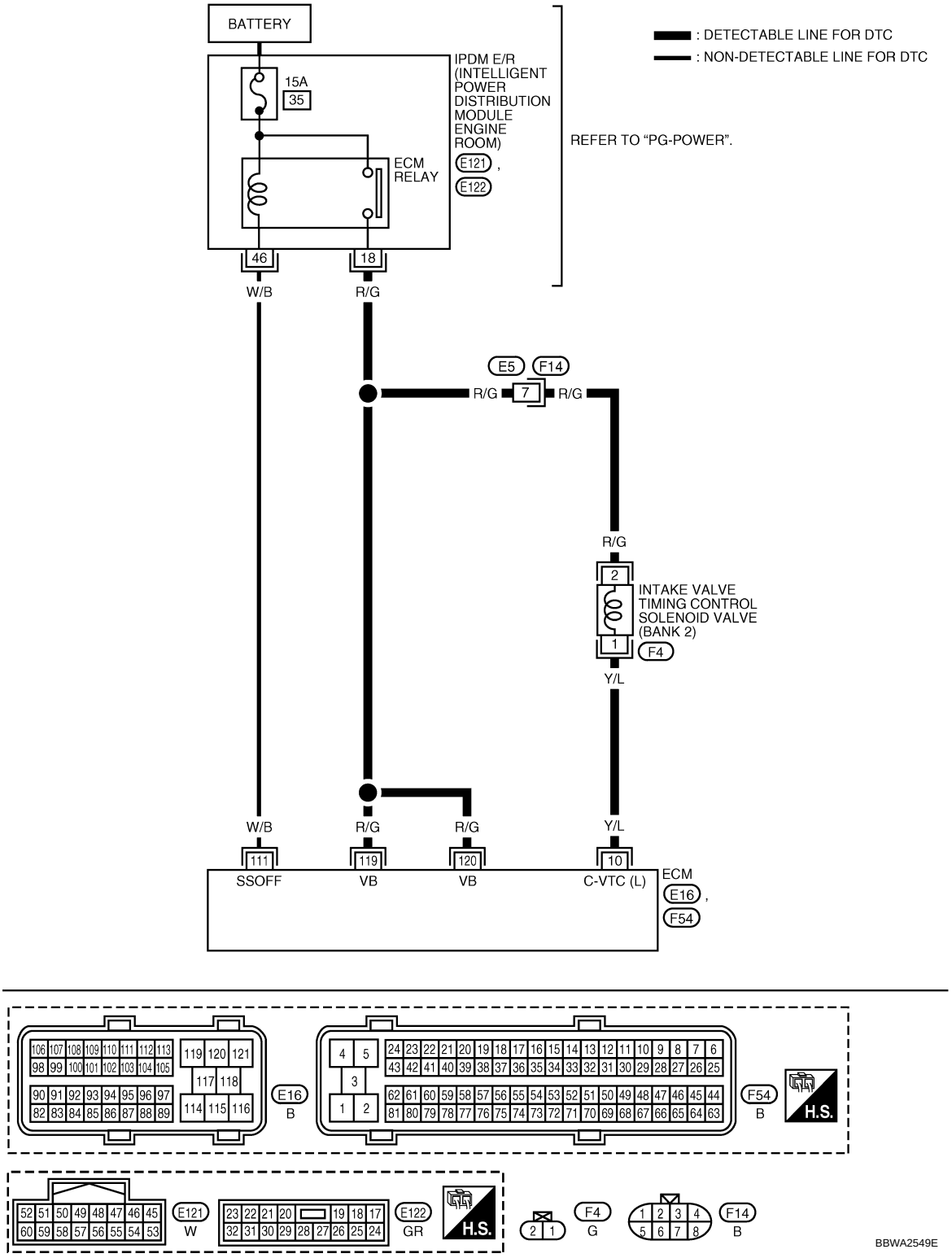

Specification data are reference values and are measured between each terminal and ground.
Pulse signal is measured by CONSULT-III.

CAUTION:

Do not use ECM ground terminals when measuring input/output voltage. Doing so may result in damage to the ECM's transistor. Use a ground other than ECM terminals, such as the ground.

TERMINAL NO.	WIRE COLOR	ITEM	CONDITION	DATA (DC Voltage)
10	Y/L	Intake valve timing control solenoid valve (Bank 2)	**[Engine is running]** • **Warm-up condition** • Idle speed	BATTERY VOLTAGE (11 - 14V)
			[Engine is running] • **Warm-up condition** • Engine speed: 2,000 rpm	7 - 12V★ 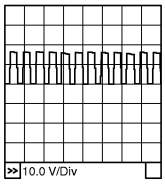 PBIB1790E
111	W/B	ECM relay (Self shut-off)	**[Engine is running]** **[Ignition switch: OFF]** • For a few seconds after turning ignition switch OFF	0 - 1.5V
			[Ignition switch: OFF] • More than a few seconds after turning ignition switch OFF	BATTERY VOLTAGE (11 - 14V)
119 120	R/G R/G	Power supply for ECM	**[Ignition switch: ON]**	BATTERY VOLTAGE (11 - 14V)

★: Average voltage for pulse signal (Actual pulse signal can be confirmed by oscilloscope.)

Diagnosis Procedure

INFOID:0000000001717256

1. CHECK INTAKE VALVE TIMING CONTROL SOLENOID VALVE POWER SUPPLY CIRCUIT

1. Turn ignition switch OFF.
2. Disconnect intake valve timing control solenoid valve harness connector.

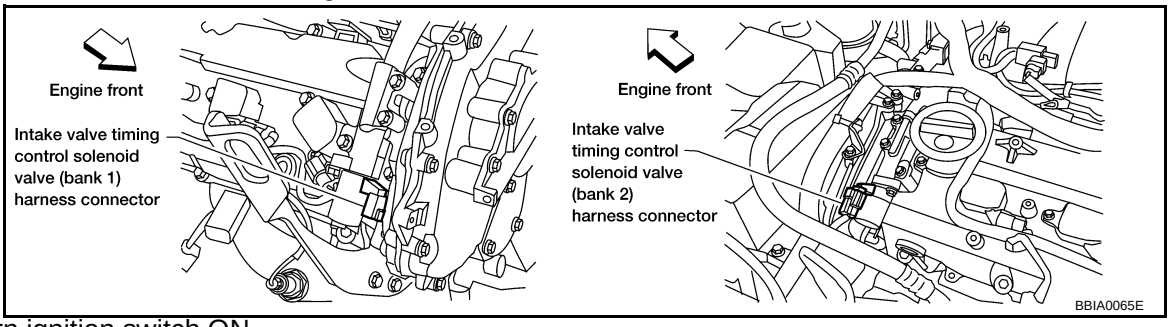

3. Turn ignition switch ON.
4. Check voltage between intake valve timing control solenoid valve terminal 2 and ground with CONSULT-III or tester.

Voltage: Battery voltage

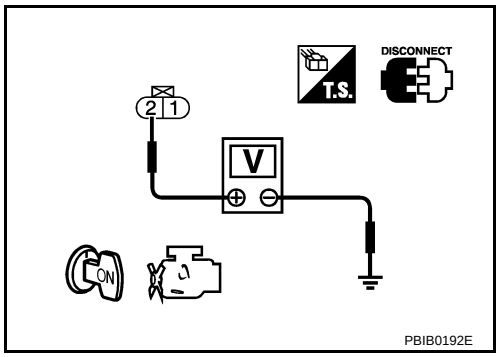

OK or NG

OK >> GO TO 3.
NG >> GO TO 2.

2. DETECT MALFUNCTIONING PART

Check the following.
- Harness connectors E5, F14
- Harness connectors F44, F101 (bank 1)

- Harness for open or short between intake valve timing control solenoid valve and IPDM E/R
- Harness for open or short between intake valve timing control solenoid valve and ECM

>> Repair harness or connectors.

3. CHECK INTAKE VALVE TIMING CONTROL SOLENOID VALVE OUTPUT SIGNAL CIRCUIT FOR OPEN AND SHORT

1. Turn ignition switch OFF.
2. Disconnect ECM harness connector.
3. Check harness continuity between ECM terminal 11 (bank 1) or 10 (bank 2) and intake valve timing control solenoid valve terminal 1. Refer to Wiring Diagram.

Continuity should exist.

4. Also check harness for short to ground and short to power.

OK or NG

OK >> GO TO 5.
NG >> GO TO 4.

4. DETECT MALFUNCTIONING PART

Check the following.
- Harness connectors F44, F101 (bank 1)
- Harness for open and short between intake valve timing control solenoid valve and ECM

>> Repair open circuit or short to ground or short to power in harness or connectors.

5. CHECK INTAKE VALVE TIMING CONTROL SOLENOID VALVE

Refer to EC-166, "Component Inspection".

OK or NG

OK >> GO TO 6.
NG >> Replace intake valve timing control solenoid valve.

6. CHECK INTERMITTENT INCIDENT

Refer to EC-130.

>> **INSPECTION END**

Component Inspection

INFOID:0000000001717257

INTAKE VALVE TIMING CONTROL SOLENOID VALVE

1. Disconnect intake valve timing control solenoid valve harness connector.
2. Check resistance between intake valve timing control solenoid valve terminals as follows.

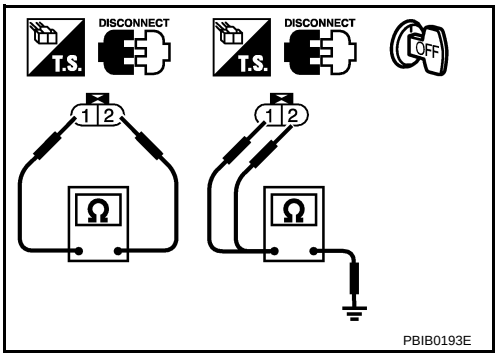

Terminals	Resistance
1 and 2	7.0 - 7.5Ω [at 20°C (68°F)]
1 or 2 and ground	∞Ω (Continuity should not exist)

If NG, replace intake valve timing control solenoid valve.
If OK, go to next step.

3. Remove intake valve timing control solenoid valve.

4. Provide 12V DC between intake valve timing control solenoid valve terminals and then interrupt it. Make sure that the plunger moves as shown in the figure.
   CAUTION:
   Do not apply 12V DC continuously for 5 seconds or more. Doing so may result in damage to the coil in intake valve timing control solenoid valve.
   If NG, replace intake valve timing control solenoid valve.
   NOTE:
   Always replace O-ring when intake valve timing control solenoid valve is removed.

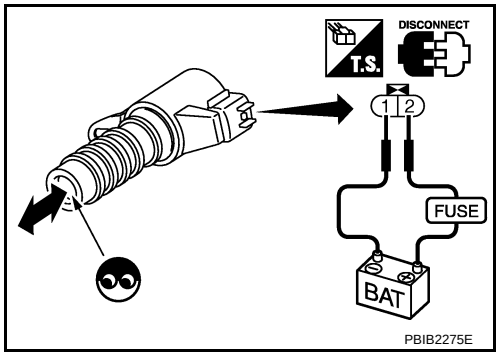

INFOID:0000000001717258

Removal and Installation

INTAKE VALVE TIMING CONTROL SOLENOID VALVE

Refer to EM-54.

DTC P0101 MAF SENSOR

Component Description

INFOID:0000000001717259

The mass air flow sensor is placed in the stream of intake air. It measures the intake flow rate by measuring a part of the entire intake flow. The mass air flow sensor controls the temperature of the hot wire to a certain amount. The heat generated by the hot wire is reduced as the intake air flows around it. The more air, the greater the heat loss.
Therefore, the electric current supplied to hot wire is changed to maintain the temperature of the hot wire as air flow increases. The ECM detects the air flow by means of this current change.

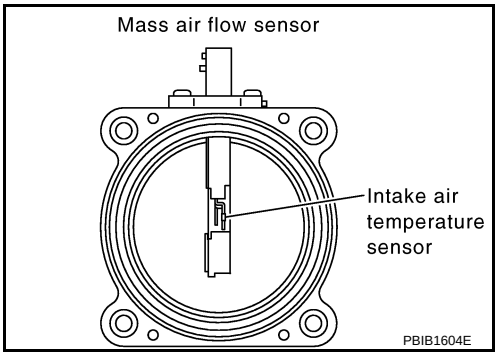

CONSULT-III Reference Value in Data Monitor Mode

INFOID:0000000001717260

Specification data are reference values.

MONITOR ITEM	CONDITION		SPECIFICATION
MAS A/F SE-B1	• See EC-122.		
CAL/LD VALUE	• Engine: After warming up • Shift lever: P or N • Air conditioner switch: OFF • No load	Idle	5% - 35%
		2,500 rpm	5% - 35%
MASS AIRFLOW	• Engine: After warming up • Shift lever: P or N • Air conditioner switch: OFF • No load	Idle	2.0 - 6.0 g·m/s
		2,500 rpm	7.0 - 20.0 g·m/s

On Board Diagnosis Logic

INFOID:0000000001717261

DTC No.	Trouble diagnosis name	DTC detecting condition		Possible cause
P0101 0101	Mass air flow sensor circuit range/performance	A)	A high voltage from the sensor is sent to ECM under light load driving condition.	• Harness or connectors (The sensor circuit is open or shorted.) • Mass air flow sensor • EVAP control system pressure sensor • Intake air temperature sensor
		B)	A low voltage from the sensor is sent to ECM under heavy load driving condition.	• Harness or connectors (The sensor circuit is open or shorted.) • Intake air leaks • Mass air flow sensor • EVAP control system pressure sensor • Intake air temperature sensor

DTC Confirmation Procedure

INFOID:0000000001717262

Perform PROCEDURE FOR MALFUNCTION A first.
If the DTC cannot be confirmed, perform PROCEDURE FOR MALFUNCTION B.
NOTE:
If DTC Confirmation Procedure has been previously conducted, always perform the following before conducting the next step.
1. Turn ignition switch OFF and wait at least 10 seconds.
2. Turn ignition switch ON.
3. Turn ignition switch OFF and wait at least 10 seconds.

PROCEDURE FOR MALFUNCTION A

NOTE:
If engine will not start or stops soon, wait at least 10 seconds with engine stopped (Ignition switch ON) instead of running engine at idle speed.

1. Start engine and warm it up to normal operating temperature.
2. Run engine for at least 10 seconds at idle speed.
3. Check 1st trip DTC.
4. If 1st trip DTC is detected, go to EC-172, "Diagnosis Procedure".

PROCEDURE FOR MALFUNCTION B

CAUTION:
Always drive vehicle at a safe speed.

With CONSULT-III

1. Turn ignition switch ON.
2. Start engine and warm it up to normal operating temperature.
   If engine cannot be started, go to EC-172, "Diagnosis Procedure".
3. Select “DATA MONITOR” mode with CONSULT-III.
4. Check the voltage of “MAS A/F SE-B1” with “DATA MONITOR”.
5. Increases engine speed to about 4,000 rpm.
6. Monitor the linear voltage rise in response to engine speed increases.
   If NG, go to EC-172, "Diagnosis Procedure".
   If OK, go to following step.

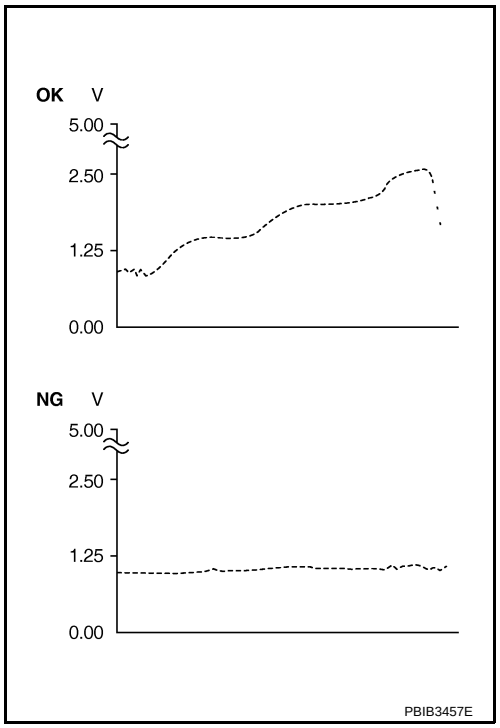

7. Maintain the following conditions for at least 10 consecutive seconds.

ENG SPEED	More than 2,000 rpm
TP SEN 1-B1	More than 3V
TP SEN 2-B1	More than 3V
Shift lever	Suitable position
Driving location	Driving vehicle uphill (Increased engine load) will help maintain the driving conditions required for this test.

8. Check 1st trip DTC.
9. If 1st trip DTC is detected, go to EC-172, "Diagnosis Procedure".

Overall Function Check

INFOID:0000000001717263

PROCEDURE FOR MALFUNCTION B

Use this procedure to check the overall function of the mass air flow sensor circuit. During this check, a 1st trip DTC might not be confirmed.

With GST

1. Start engine and warm it up to normal operating temperature.
2. Select Service $01 with GST.
3. Check the mass air flow sensor signal with Service $01.
4. Check for linear mass air flow sensor signal value rise in response to increases to about 4,000 rpm in engine speed.
5. If NG, go to EC-172, "Diagnosis Procedure".

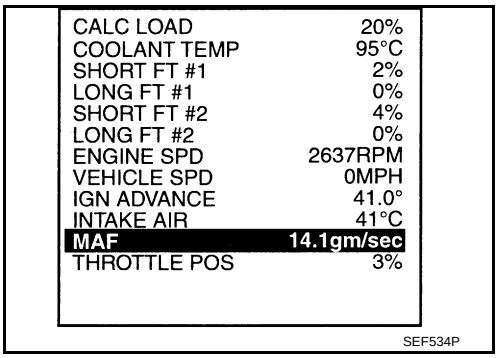

Wiring Diagram

INFOID:0000000001717264

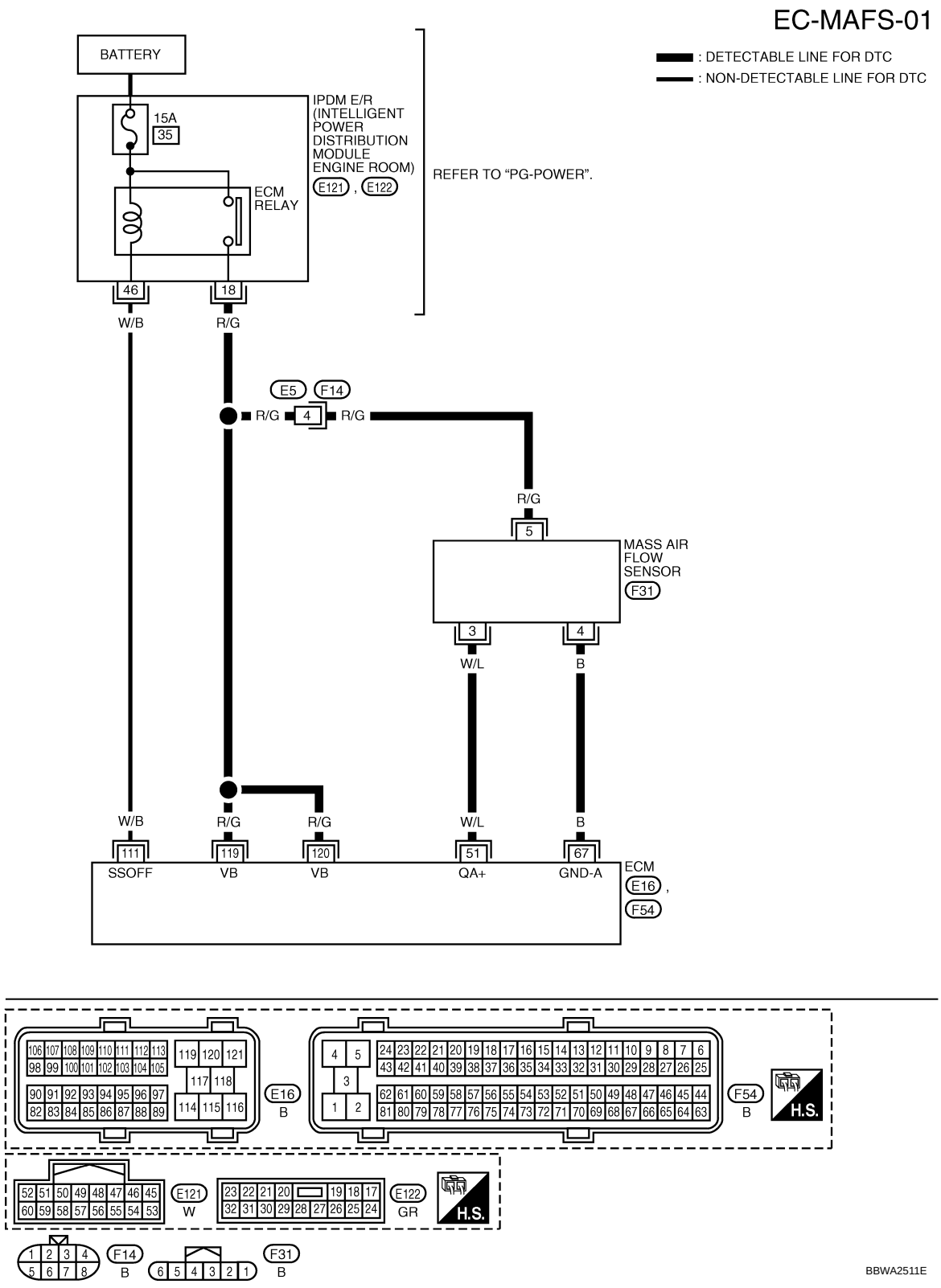

Specification data are reference values and are measured between each terminal and ground.

CAUTION:

Do not use ECM ground terminals when measuring input/output voltage. Doing so may result in damage to the ECM's transistor. Use a ground other than ECM terminals, such as the ground.

TER-MI-NAL NO.	WIRE COLOR	ITEM	CONDITION	DATA (DC Voltage)
51	W/L	Mass air flow sensor	**[Engine is running]** • **Warm-up condition** • Idle speed	1.0 - 1.3V
			[Engine is running] • **Warm-up condition** • Engine speed: 2,500 rpm	1.6 - 2.0V
67	B	Sensor ground	**[Engine is running]** • **Warm-up condition** • Idle speed	Approximately 0V
111	W/B	ECM relay (Self shut-off)	**[Engine is running]** **[Ignition switch: OFF]** • For a few seconds after turning ignition switch OFF	0 - 1.5V
			[Ignition switch: OFF] • More than a few seconds after turning ignition switch OFF	BATTERY VOLTAGE (11 - 14V)
119 120	R/G R/G	Power supply for ECM	**[Ignition switch: ON]**	BATTERY VOLTAGE (11 - 14V)

Diagnosis Procedure

INFOID:0000000001717265

1. INSPECTION START

Which malfunction (A or B) is duplicated?

A or B

A >> GO TO 3.
B >> GO TO 2.

2. CHECK INTAKE SYSTEM

Check the following for connection.
- Air duct
- Vacuum hoses
- Intake air passage between air duct and intake manifold

OK or NG

OK >> GO TO 3.
NG >> Reconnect the parts.

3. CHECK GROUND CONNECTIONS

1. Turn ignition switch OFF.
2. Loosen and retighten three ground screws on the body. Refer to EC-138, "Ground Inspection".

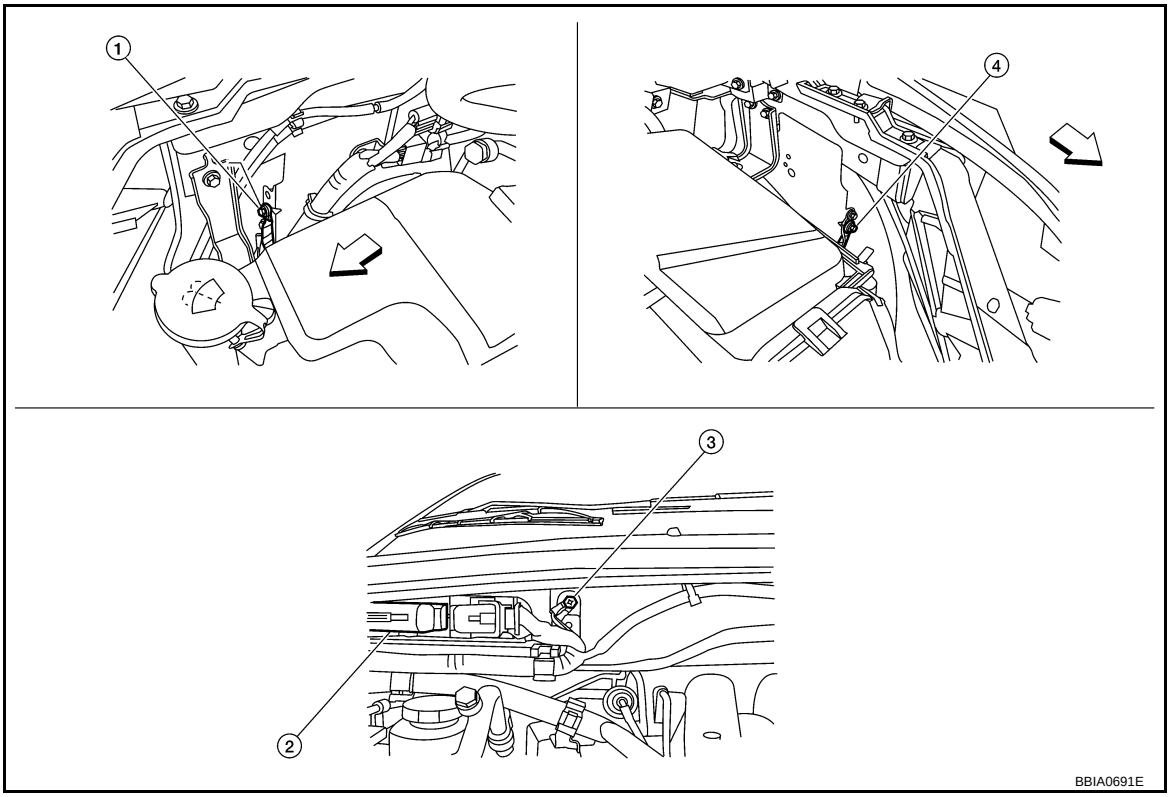

⇦ Vehicle front

1. Body ground E24
2. ECM
3. Body ground E9
4. Body ground E15

OK or NG

OK >> GO TO 4.
NG >> Repair or replace ground connections.

4. CHECK MAF SENSOR POWER SUPPLY CIRCUIT

1. Disconnect mass air flow (MAF) sensor harness connector.
2. Turn ignition switch ON.

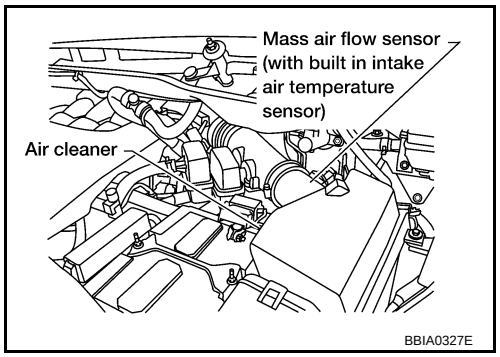

3. Check voltage between MAF sensor terminal 5 and ground with CONSULT-III or tester.

Voltage: Battery voltage

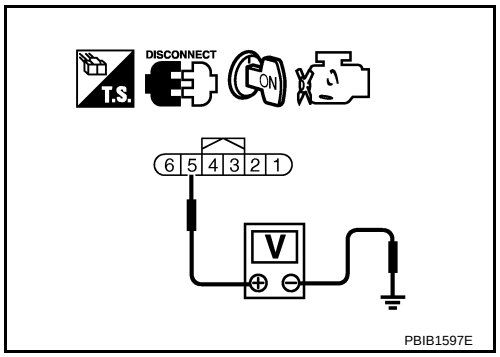

OK or NG

OK >> GO TO 6.
NG >> GO TO 5.

5. DETECT MALFUNCTIONING PART

Check the following.
- Harness connectors E5, F14
- Harness for open or short between mass air flow sensor and IPDM E/R
- Harness for open or short between mass air flow sensor and ECM

>> Repair harness or connectors.

6. CHECK MAF SENSOR GROUND CIRCUIT FOR OPEN AND SHORT

1. Turn ignition switch OFF.
2. Disconnect ECM harness connector.
3. Check harness continuity between MAF sensor terminal 4 and ECM terminal 67.
   Refer to Wiring Diagram.

Continuity should exist.

4. Also check harness for short to ground and short to power.

OK or NG

OK >> GO TO 7.
NG >> Repair open circuit or short to ground or short to power in harness or connectors.

7. CHECK MAF SENSOR INPUT SIGNAL CIRCUIT FOR OPEN AND SHORT

1. Check harness continuity between MAF sensor terminal 3 and ECM terminal 51.
   Refer to Wiring Diagram.

Continuity should exist.

2. Also check harness for short to ground and short to power.

OK or NG

OK >> GO TO 8.
NG >> Repair open circuit or short to ground or short to power in harness or connectors.

8. CHECK INTAKE AIR TEMPERATURE SENSOR

Refer to EC-187, "Component Inspection".

OK or NG

OK >> GO TO 9.
NG >> Replace intake air temperature sensor.

9. CHECK EVAP CONTROL SYSTEM PRESSURE SENSOR

Refer to EC-398, "Component Inspection".

OK or NG

OK >> GO TO 10.
NG >> Replace EVAP control system pressure sensor.

10. CHECK MASS AIR FLOW SENSOR

Refer to EC-175, "Component Inspection".

OK or NG

OK >> GO TO 11.
NG >> Replace mass air flow sensor.

11. CHECK INTERMITTENT INCIDENT

Refer to EC-130.

>> **INSPECTION END**

Component Inspection

INFOID:0000000001717266

MASS AIR FLOW SENSOR

With CONSULT-III

1. Reconnect all harness connectors disconnected.
2. Start engine and warm it up to normal operating temperature.
3. Connect CONSULT-III and select “DATA MONITOR” mode.
4. Select “MAS A/F SE-B1” and check indication under the following conditions.

Condition	MAS A/F SE-B1 (V)
Ignition switch ON (Engine stopped.)	Approx. 0.4
Idle (Engine is warmed-up to normal operating temperature.)	1.0 - 1.3
2,500 rpm (Engine is warmed-up to normal operating temperature.)	1.6 - 2.0
Idle to about 4,000 rpm	1.0 - 1.3 to Approx. 2.4*

*: Check for linear voltage rise in response to engine being increased to about 4,000 rpm.

5. If the voltage is out of specification, proceed the following.

a. Check for the cause of uneven air flow through mass air flow sensor. Refer to following.
   - Crushed air ducts
   - Malfunctioning seal of air cleaner element
   - Uneven dirt of air cleaner element
   - Improper specification of intake air system parts

b. If NG, repair or replace malfunctioning part and perform step 2 to 4 again.
   If OK, go to next step.

6. Turn ignition switch OFF.
7. Disconnect mass air flow sensor harness connector and reconnect it again.
8. Perform step 2 to 4 again.
9. If NG, clean or replace mass air flow sensor.

Without CONSULT-III

1. Reconnect all harness connectors disconnected.
2. Start engine and warm it up to normal operating temperature.
3. Check voltage between ECM terminal 51 (Mass air flow sensor signal) and ground.

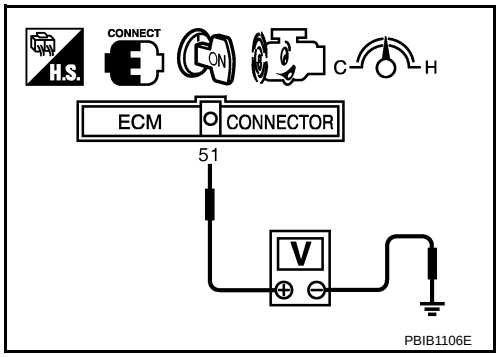

Condition	Voltage V
Ignition switch ON (Engine stopped.)	Approx. 0.4
Idle (Engine is warmed-up to normal operating temperature.)	1.0 - 1.3
2,500 rpm (Engine is warmed-up to normal operating temperature.)	1.6 - 2.0
Idle to about 4,000 rpm	1.0 - 1.3 to Approx. 2.4*

*: Check for linear voltage rise in response to engine being increased to about 4,000 rpm.

4. If the voltage is out of specification, proceed the following.

a. Check for the cause of uneven air flow through mass air flow sensor. Refer to following.
   - Crushed air ducts
   - Malfunctioning seal of air cleaner element
   - Uneven dirt of air cleaner element
   - Improper specification of intake air system parts

b. If NG, repair or replace malfunctioning part and perform step 2 to 3 again.
   If OK, go to next step.

5. Turn ignition switch OFF.
6. Disconnect mass air flow sensor harness connector and reconnect it again.
7. Perform step 2 and 3 again.
8. If NG, clean or replace mass air flow sensor.

Removal and Installation

INFOID:0000000001717267

MASS AIR FLOW SENSOR

Refer to EM-15.

DTC P0102, P0103 MAF SENSOR

Component Description

INFOID:0000000001717268

The mass air flow sensor is placed in the stream of intake air. It measures the intake flow rate by measuring a part of the entire intake flow. The mass air flow sensor controls the temperature of the hot wire to a certain amount. The heat generated by the hot wire is reduced as the intake air flows around it. The more air, the greater the heat loss.
Therefore, the electric current supplied to hot wire is changed to maintain the temperature of the hot wire as air flow increases. The ECM detects the air flow by means of this current change.

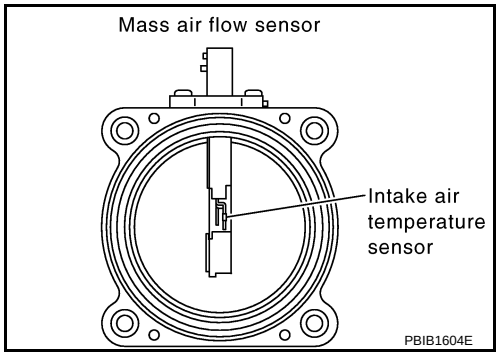

CONSULT-III Reference Value in Data Monitor Mode

INFOID:0000000001717269

Specification data are reference values.

MONITOR ITEM	CONDITION		SPECIFICATION
MAS A/F SE-B1	• See EC-122.		
CAL/LD VALUE	• Engine: After warming up • Shift lever: P or N • Air conditioner switch: OFF • No load	Idle	5% - 35%
		2,500 rpm	5% - 35%
MASS AIRFLOW	• Engine: After warming up • Shift lever: P or N • Air conditioner switch: OFF • No load	Idle	2.0 - 6.0 g·m/s
		2,500 rpm	7.0 - 20.0 g·m/s

On Board Diagnosis Logic

INFOID:0000000001717270

These self-diagnoses have the one trip detection logic.

DTC No.	Trouble diagnosis name	DTC detecting condition	Possible cause
P0102 0102	Mass air flow sensor circuit low input	An excessively low voltage from the sensor is sent to ECM.	• Harness or connectors (The sensor circuit is open or shorted.) • Intake air leaks • Mass air flow sensor
P0103 0103	Mass air flow sensor circuit high input	An excessively high voltage from the sensor is sent to ECM.	• Harness or connectors (The sensor circuit is open or shorted.) • Mass air flow sensor

FAIL-SAFE MODE

When the malfunction is detected, the ECM enters fail-safe mode and the MIL lights up.

Detected items	Engine operating condition in fail-safe mode
Mass air flow sensor circuit	Engine speed will not rise more than 2,400 rpm due to the fuel cut.

DTC Confirmation Procedure

INFOID:0000000001717271

NOTE:
If DTC Confirmation Procedure has been previously conducted, always perform the following before conducting the next step.
1. Turn ignition switch OFF and wait at least 10 seconds.
2. Turn ignition switch ON.
3. Turn ignition switch OFF and wait at least 10 seconds.

PROCEDURE FOR DTC P0102

1. Start engine and wait at least 5 seconds.
2. Check DTC.
3. If DTC is detected, go to EC-180, "Diagnosis Procedure".

PROCEDURE FOR DTC P0103

1. Turn ignition switch ON.
2. Wait at least 5 seconds.
3. Check DTC.
4. If DTC is detected, go to EC-180, "Diagnosis Procedure".
   If DTC is not detected, go to next step.
5. Start engine and wait at least 5 seconds.
6. Check DTC.
7. If DTC is detected, go to EC-180, "Diagnosis Procedure".

Wiring Diagram

INFOID:0000000001717272

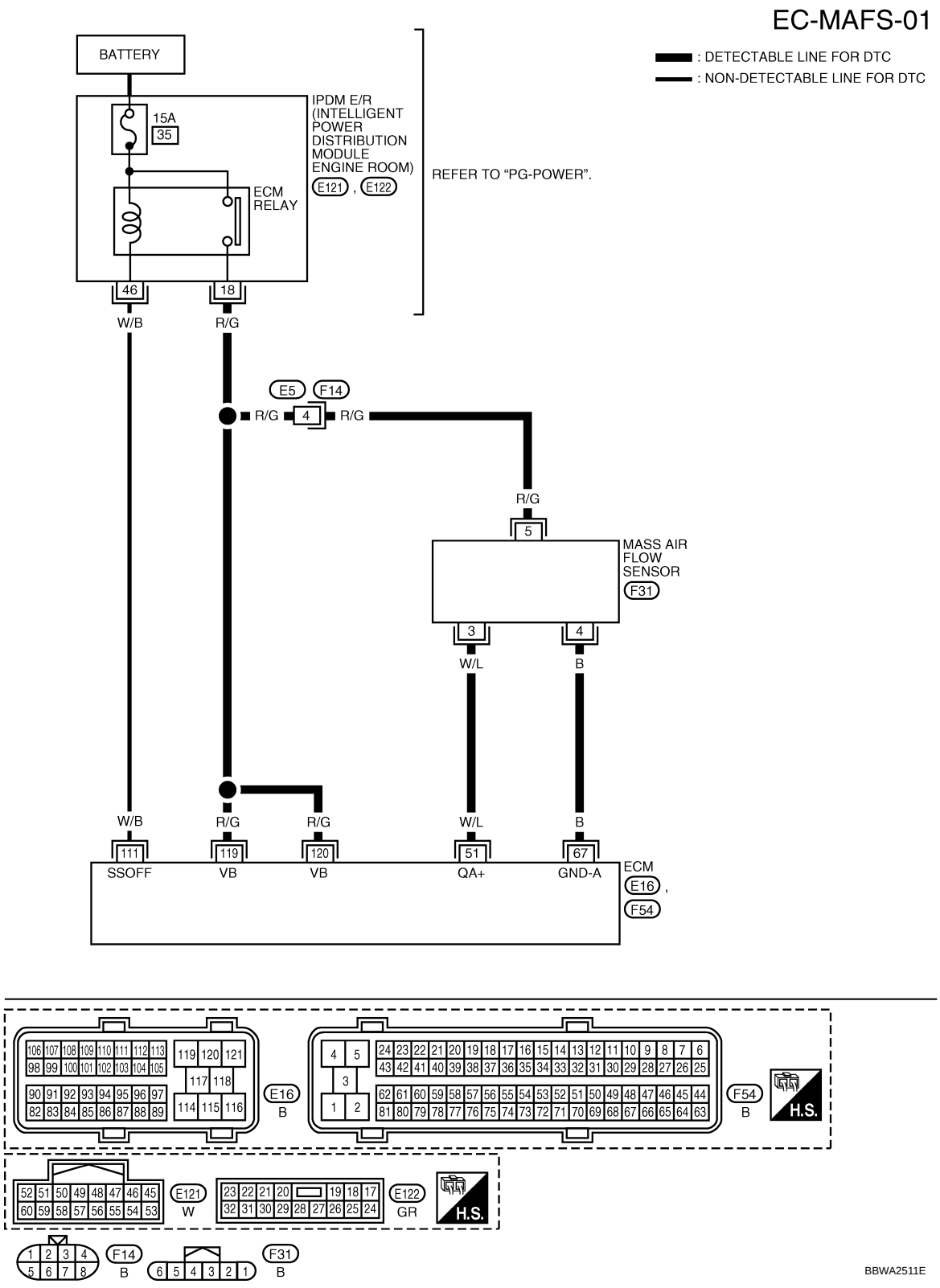

Specification data are reference values and are measured between each terminal and ground.

CAUTION:

Do not use ECM ground terminals when measuring input/output voltage. Doing so may result in damage to the ECM's transistor. Use a ground other than ECM terminals, such as the ground.

TER-MI-NAL NO.	WIRE COLOR	ITEM	CONDITION	DATA (DC Voltage)
51	W/L	Mass air flow sensor	**[Engine is running]** • **Warm-up condition** • Idle speed	1.0 - 1.3V
			[Engine is running] • **Warm-up condition** • Engine speed: 2,500 rpm	1.6 - 2.0V
67	B	Sensor ground	**[Engine is running]** • **Warm-up condition** • Idle speed	Approximately 0V
111	W/B	ECM relay (Self shut-off)	**[Engine is running]** **[Ignition switch: OFF]** • For a few seconds after turning ignition switch OFF	0 - 1.5V
			[Ignition switch: OFF] • More than a few seconds after turning ignition switch OFF	BATTERY VOLTAGE (11 - 14V)
119 120	R/G R/G	Power supply for ECM	**[Ignition switch: ON]**	BATTERY VOLTAGE (11 - 14V)

Diagnosis Procedure

INFOID:0000000001717273

1. INSPECTION START

Which malfunction (P0102 or P0103) is duplicated?

P0102 or P0103

P0102 >> GO TO 2.
P0103 >> GO TO 3.

2. CHECK INTAKE SYSTEM

Check the following for connection.
- Air duct
- Vacuum hoses
- Intake air passage between air duct and intake manifold

OK or NG

OK >> GO TO 3.
NG >> Reconnect the parts.

3. CHECK GROUND CONNECTIONS

1. Turn ignition switch OFF.
2. Loosen and retighten three ground screws on the body. Refer to EC-138, "Ground Inspection".

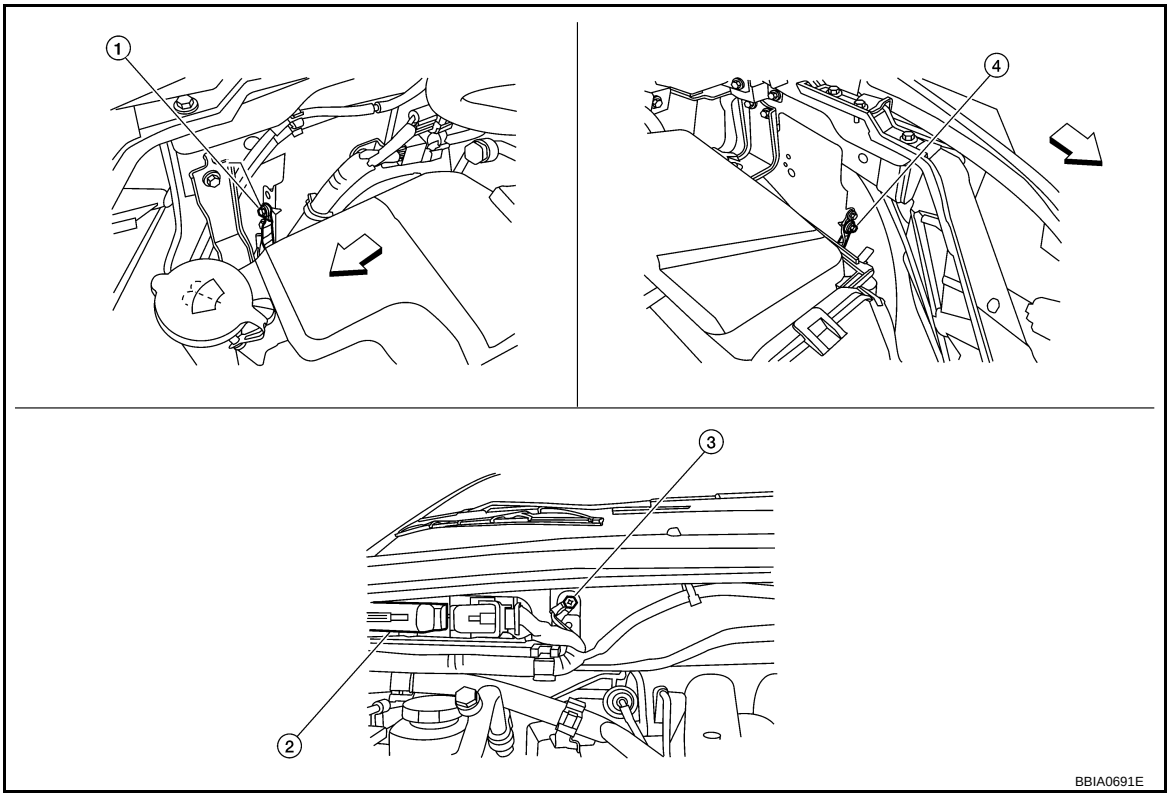

⇦ Vehicle front

1. Body ground E24
2. ECM
3. Body ground E9
4. Body ground E15

OK or NG

OK >> GO TO 4.
NG >> Repair or replace ground connections.

4. CHECK MAF SENSOR POWER SUPPLY CIRCUIT

1. Disconnect mass air flow (MAF) sensor harness connector.
2. Turn ignition switch ON.

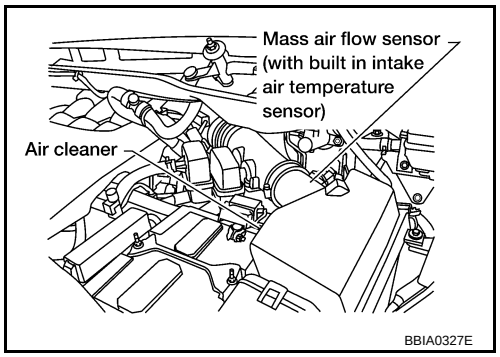

3. Check voltage between MAF sensor terminal 5 and ground with CONSULT-III or tester.

Voltage: Battery voltage

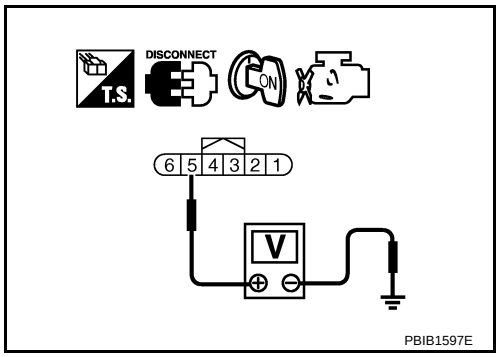

OK or NG

OK >> GO TO 6.
NG >> GO TO 5.

5. DETECT MALFUNCTIONING PART

Check the following.
- Harness connectors E5, F14
- Harness for open or short between mass air flow sensor and IPDM E/R
- Harness for open or short between mass air flow sensor and ECM

>> Repair harness or connectors.

6. CHECK MAF SENSOR GROUND CIRCUIT FOR OPEN AND SHORT

1. Turn ignition switch OFF.
2. Disconnect ECM harness connector.
3. Check harness continuity between MAF sensor terminal 4 and ECM terminal 67.
   Refer to Wiring Diagram.

Continuity should exist.

4. Also check harness for short to ground and short to power.

OK or NG

OK >> GO TO 7.
NG >> Repair open circuit or short to ground or short to power in harness or connectors.

7. CHECK MAF SENSOR INPUT SIGNAL CIRCUIT FOR OPEN AND SHORT

1. Check harness continuity between MAF sensor terminal 3 and ECM terminal 51.
   Refer to Wiring Diagram.

Continuity should exist.

2. Also check harness for short to ground and short to power.

OK or NG

OK >> GO TO 8.
NG >> Repair open circuit or short to ground or short to power in harness or connectors.

8. CHECK MASS AIR FLOW SENSOR

Refer to EC-182, "Component Inspection".

OK or NG

OK >> GO TO 9.
NG >> Replace mass air flow sensor.

9. CHECK INTERMITTENT INCIDENT

Refer to EC-130.

>> **INSPECTION END**

Component Inspection

INFOID:0000000001717274

MASS AIR FLOW SENSOR

With CONSULT-III

1. Reconnect all harness connectors disconnected.
2. Start engine and warm it up to normal operating temperature.
3. Connect CONSULT-III and select “DATA MONITOR” mode.
4. Select “MAS A/F SE-B1” and check indication under the following conditions.

Condition	MAS A/F SE-B1 (V)
Ignition switch ON (Engine stopped.)	Approx. 0.4
Idle (Engine is warmed-up to normal operating temperature.)	1.0 - 1.3
2,500 rpm (Engine is warmed-up to normal operating temperature.)	1.6 - 2.0
Idle to about 4,000 rpm	1.0 - 1.3 to Approx. 2.4*

*: Check for linear voltage rise in response to engine being increased to about 4,000 rpm.

5. If the voltage is out of specification, proceed the following.

a. Check for the cause of uneven air flow through mass air flow sensor. Refer to following.
   - Crushed air ducts
   - Malfunctioning seal of air cleaner element
   - Uneven dirt of air cleaner element
   - Improper specification of intake air system parts

b. If NG, repair or replace malfunctioning part and perform step 2 to 4 again.
   If OK, go to next step.

6. Turn ignition switch OFF.
7. Disconnect mass air flow sensor harness connector and reconnect it again.
8. Perform step 2 to 4 again.
9. If NG, clean or replace mass air flow sensor.

Without CONSULT-III

1. Reconnect all harness connectors disconnected.
2. Start engine and warm it up to normal operating temperature.
3. Check voltage between ECM terminal 51 (Mass air flow sensor signal) and ground.

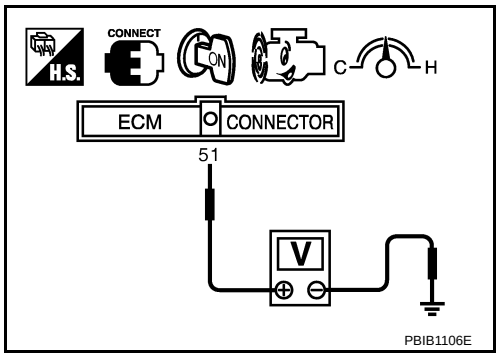

Condition	Voltage V
Ignition switch ON (Engine stopped.)	Approx. 0.4
Idle (Engine is warmed-up to normal operating temperature.)	1.0 - 1.3
2,500 rpm (Engine is warmed-up to normal operating temperature.)	1.6 - 2.0
Idle to about 4,000 rpm	1.0 - 1.3 to Approx. 2.4*

*: Check for linear voltage rise in response to engine being increased to about 4,000 rpm.

4. If the voltage is out of specification, proceed the following.

a. Check for the cause of uneven air flow through mass air flow sensor. Refer to following.
   - Crushed air ducts
   - Malfunctioning seal of air cleaner element
   - Uneven dirt of air cleaner element
   - Improper specification of intake air system parts

b. If NG, repair or replace malfunctioning part and perform step 2 to 3 again.
   If OK, go to next step.

5. Turn ignition switch OFF.
6. Disconnect mass air flow sensor harness connector and reconnect it again.
7. Perform step 2 and 3 again.
8. If NG, clean or replace mass air flow sensor.

Removal and Installation

INFOID:0000000001717275

MASS AIR FLOW SENSOR

Refer to EM-15.

DTC P0112, P0113 IAT SENSOR

Component Description

INFOID:0000000001717276

The intake air temperature sensor is built-into mass air flow sensor. The sensor detects intake air temperature and transmits a signal to the ECM.
The temperature sensing unit uses a thermistor which is sensitive to the change in temperature. Electrical resistance of the thermistor decreases in response to the temperature rise.

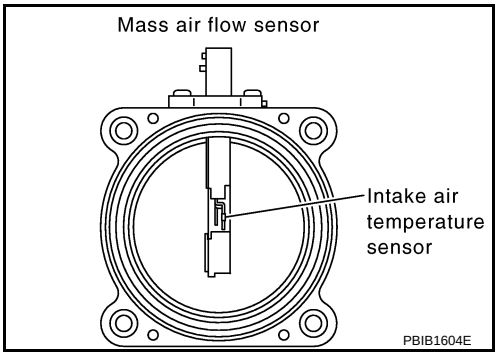

<Reference data>

Intake air temperature °C (°F)	Voltage* V	Resistance kΩ
25 (77)	3.32	1.800 - 2.200
80 (176)	1.23	0.283 - 0.359

*: This data is reference value and is measured between ECM terminal 34 (Intake air temperature sensor) and ground.

CAUTION:
Do not use ECM ground terminals when measuring input/output voltage. Doing so may result in damage to the ECM's transistor. Use a ground other than ECM terminals, such as the ground.

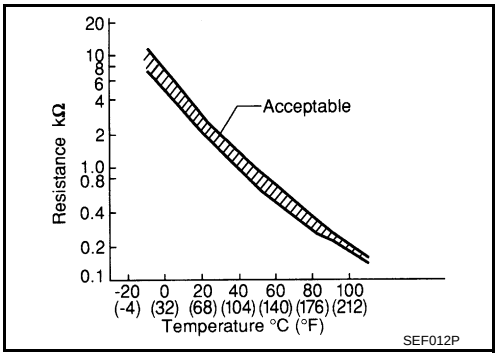

On Board Diagnosis Logic

INFOID:0000000001717277

DTC No.	Trouble diagnosis name	DTC detecting condition	Possible cause
P0112 0112	Intake air temperature sensor circuit low input	An excessively low voltage from the sensor is sent to ECM.	• Harness or connectors (The sensor circuit is open or shorted.) • Intake air temperature sensor
P0113 0113	Intake air temperature sensor circuit high input	An excessively high voltage from the sensor is sent to ECM.	

DTC Confirmation Procedure

INFOID:0000000001717278

1. If DTC Confirmation Procedure has been previously conducted, always perform the following before conducting the next step.
a. Turn ignition switch OFF and wait at least 10 seconds.
b. Turn ignition switch ON.
c. Turn ignition switch OFF and wait at least 10 seconds.
2. Turn ignition switch ON.
3. Wait at least 5 seconds.
4. Check 1st trip DTC.
5. If 1st trip DTC is detected, go to EC-185, "Diagnosis Procedure".

Wiring Diagram

INFOID:0000000001717279

EC-IATS-01

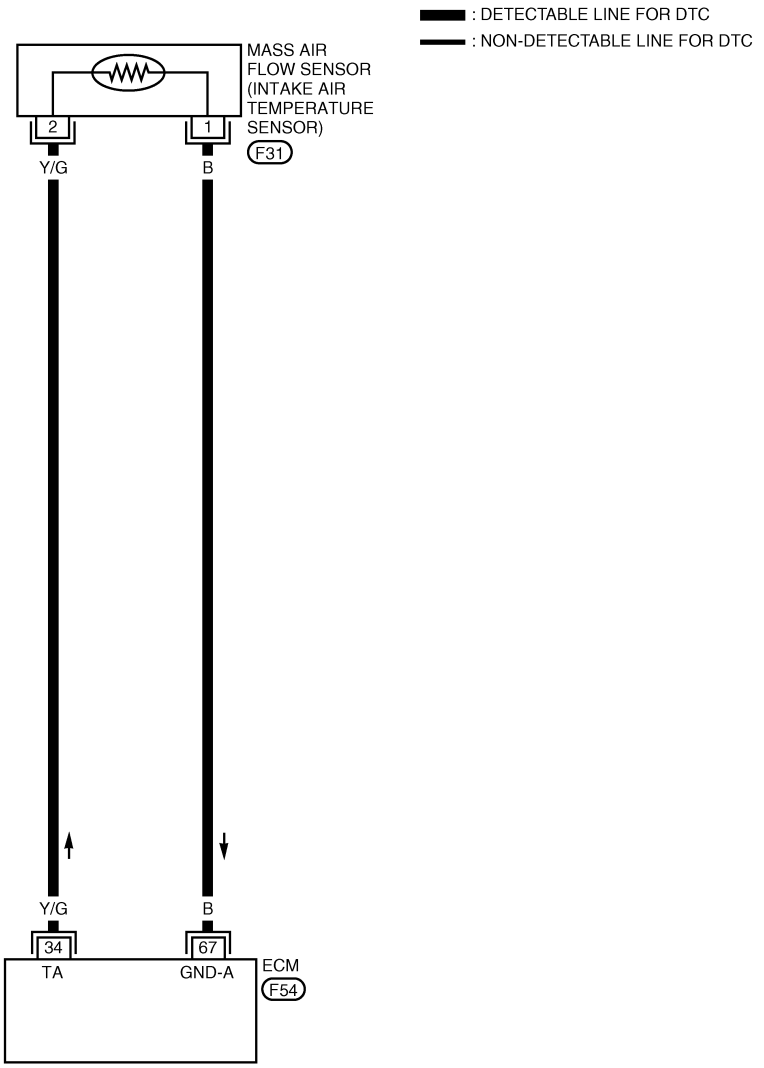

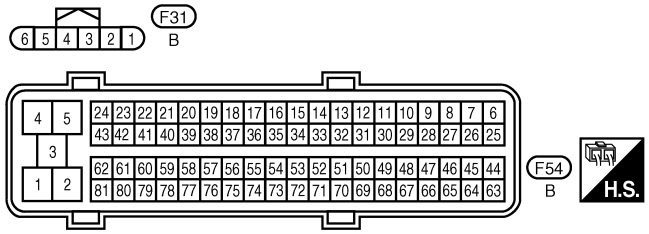

BBWA2512E

Diagnosis Procedure

INFOID:0000000001717280

1. CHECK GROUND CONNECTIONS

1. Turn ignition switch OFF.
2. Loosen and retighten three ground screws on the body. Refer to EC-138, "Ground Inspection".

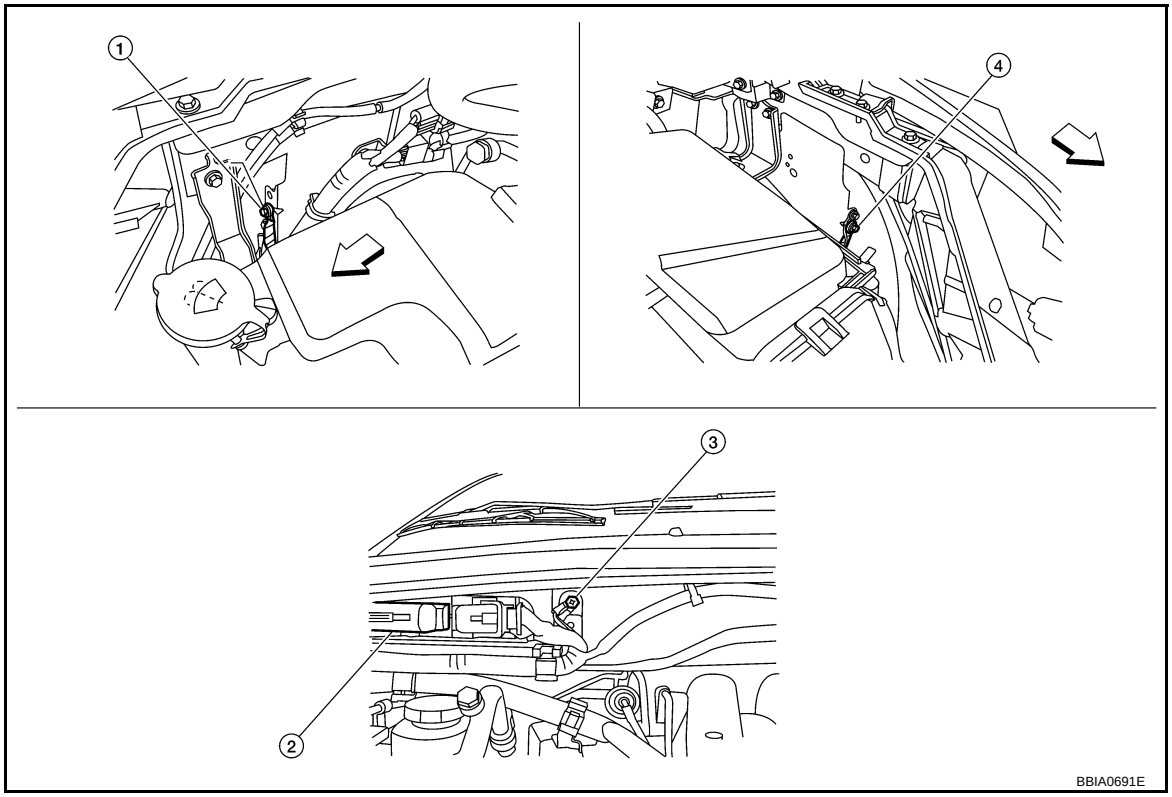

⇦: Vehicle front

1. Body ground E24
2. ECM
3. Body ground E9
4. Body ground E15

OK or NG

OK >> GO TO 2.
NG >> Repair or replace ground connections.

2. CHECK INTAKE AIR TEMPERATURE SENSOR POWER SUPPLY CIRCUIT

1. Disconnect mass air flow sensor (intake air temperature sensor is built-into) harness connector.
2. Turn ignition switch ON.

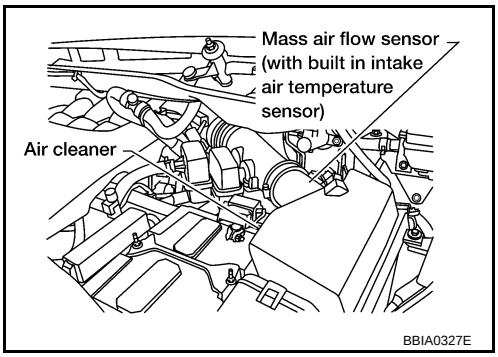

3. Check voltage between mass air flow sensor terminal 2 and ground.

Voltage: Approximately 5V

OK or NG

OK >> GO TO 3.
NG >> Repair harness or connectors.

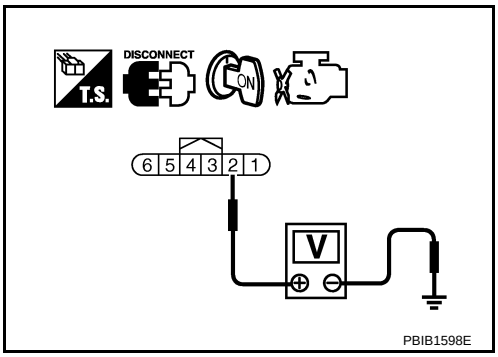

3. CHECK INTAKE AIR TEMPERATURE SENSOR GROUND CIRCUIT FOR OPEN AND SHORT

1. Turn ignition switch OFF.
2. Disconnect ECM harness connector.
3. Check harness continuity between mass air flow sensor terminal 1 and ECM terminal 67. Refer to Wiring Diagram.

Continuity should exist.

4. Also check harness for short to ground and short to power.

OK or NG

OK >> GO TO 4.
NG >> Repair open circuit or short to ground or short to power in harness or connectors.

4. CHECK INTAKE AIR TEMPERATURE SENSOR

Refer to EC-187, "Component Inspection".

OK or NG

OK >> GO TO 5.
NG >> Replace mass air flow sensor (with intake air temperature sensor).

5. CHECK INTERMITTENT INCIDENT

Refer toEC-130.

>> **INSPECTION END**

Component Inspection

INFOID:0000000001717281

INTAKE AIR TEMPERATURE SENSOR

1. Check resistance between mass air flow sensor terminals 1 and 2 under the following conditions.

Intake air temperature °C (°F)	Resistance kΩ
25 (77)	1.800 - 2.200

2. If NG, replace mass air flow sensor (with intake air temperature sensor).

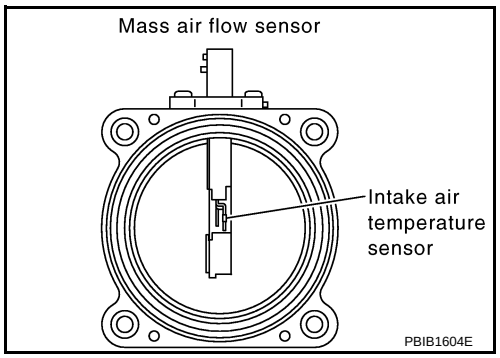

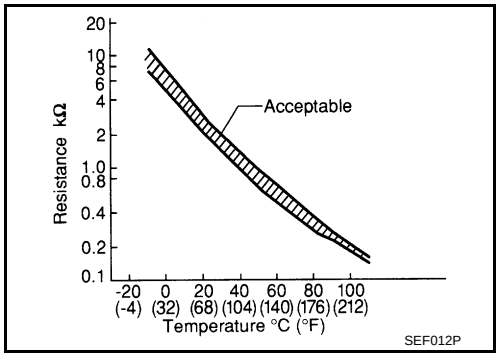

Removal and Installation

INFOID:0000000001717282

MASS AIR FLOW SENSOR

Refer to EM-15.

DTC P0117, P0118 ECT SENSOR

Component Description

INFOID:0000000001717283

The engine coolant temperature sensor is used to detect the engine coolant temperature. The sensor modifies a voltage signal from the ECM. The modified signal returns to the ECM as the engine coolant temperature input. The sensor uses a thermistor which is sensitive to the change in temperature. The electrical resistance of the thermistor decreases as temperature increases.

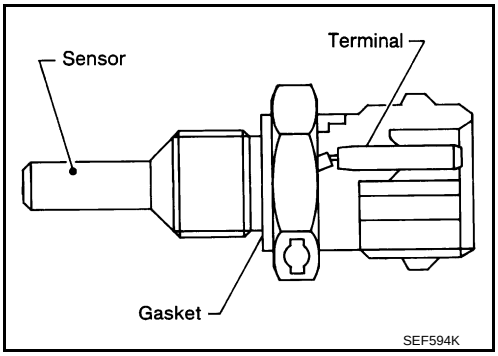

<Reference data>

Engine coolant temperature °C (°F)	Voltage* V	Resistance kΩ
–10 (14)	4.4	7.0 - 11.4
20 (68)	3.5	2.1 - 2.9
50 (122)	2.2	0.68 - 1.00
90 (194)	0.9	0.236 - 0.260

*: This data is reference value and is measured between ECM terminal 73 (Engine coolant temperature sensor) and ground.

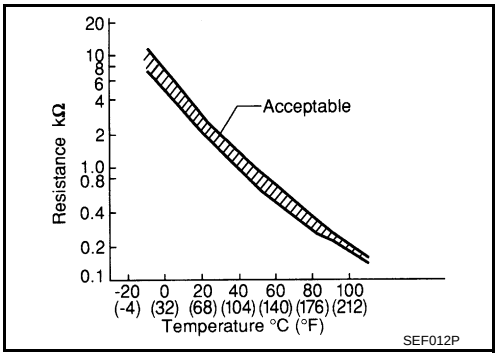

CAUTION:

Do not use ECM ground terminals when measuring input/output voltage. Doing so may result in damage to the ECM's transistor. Use a ground other than ECM terminals, such as the ground.

On Board Diagnosis Logic

INFOID:0000000001717284

These self-diagnoses have the one trip detection logic.

DTC No.	Trouble Diagnosis Name	DTC Detecting Condition	Possible Cause
P0117 0117	Engine coolant temperature sensor circuit low input	An excessively low voltage from the sensor is sent to ECM.	• Harness or connectors (The sensor circuit is open or shorted.) • Engine coolant temperature sensor
P0118 0118	Engine coolant temperature sensor circuit high input	An excessively high voltage from the sensor is sent to ECM.	

FAIL-SAFE MODE

When the malfunction is detected, the ECM enters fail-safe mode and the MIL lights up.

Detected items	Engine operating condition in fail-safe mode	
Engine coolant temperature sensor circuit	Engine coolant temperature will be determined by ECM based on the following condition. CONSULT-III displays the engine coolant temperature decided by ECM.	
	Condition	Engine coolant temperature decided (CONSULT-III display)
	Just as ignition switch is turned ON or START	40°C (104°F)
	Approx. 4 minutes or more after engine starting.	80°C (176°F)
	Except as shown above	40 - 80°C (104 - 176°F) (Depends on the time)
	When the fail-safe system for engine coolant temperature sensor is activated, the cooling fan operates while engine is running.	

DTC Confirmation Procedure

INFOID:0000000001717285

1. If DTC Confirmation Procedure has been previously conducted, always perform the following before conducting the next step.
a. Turn ignition switch OFF and wait at least 10 seconds.
b. Turn ignition switch ON.
c. Turn ignition switch OFF and wait at least 10 seconds.
2. Turn ignition switch ON.
3. Wait at least 5 seconds.
4. Check DTC.
5. If DTC is detected, go to EC-190, "Diagnosis Procedure".

Wiring Diagram

INFOID:0000000001717286

EC-ECTS-01

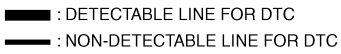

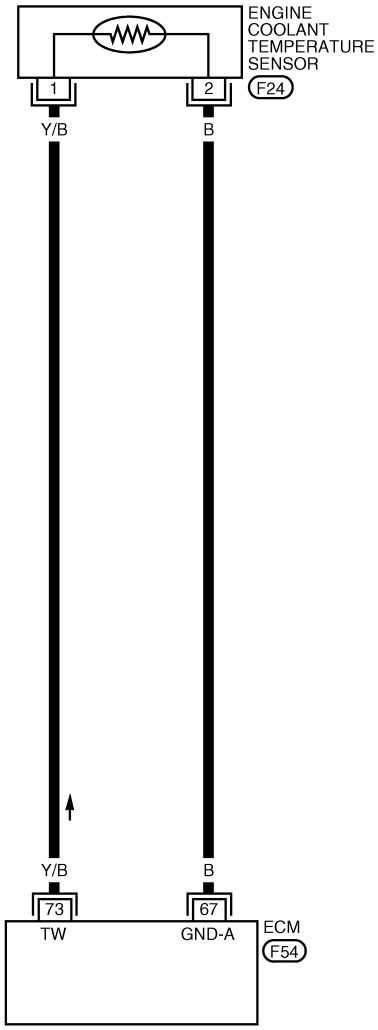

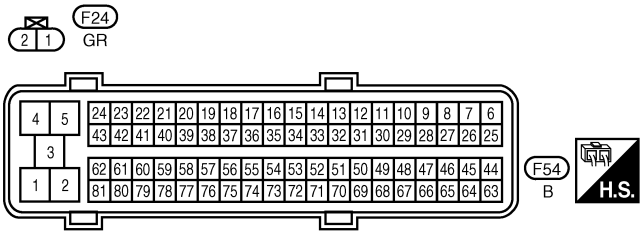

BBWA2513E

Diagnosis Procedure

INFOID:0000000001717287

1. CHECK GROUND CONNECTIONS

1. Turn ignition switch OFF.
2. Loosen and retighten three ground screws on the body. Refer to EC-138, "Ground Inspection".

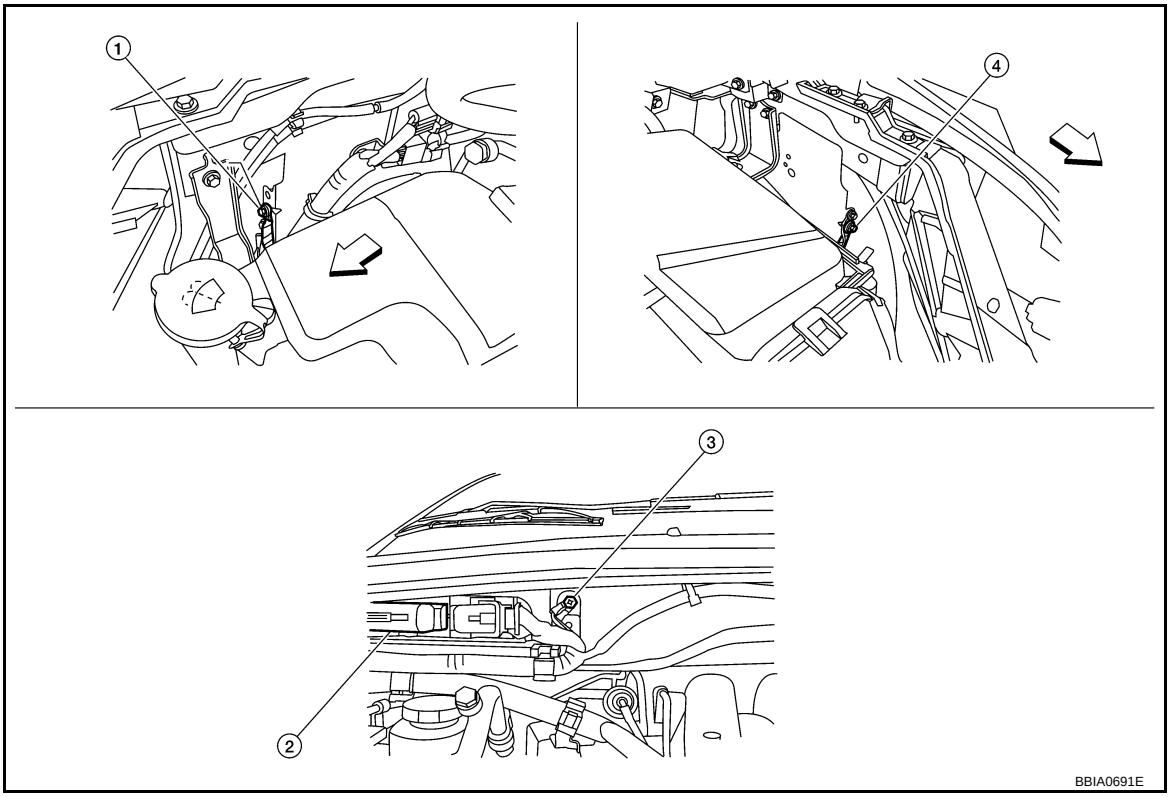

⇦ Vehicle front

1. Body ground E24
2. ECM
3. Body ground E9
4. Body ground E15

OK or NG

OK >> GO TO 2.
NG >> Repair or replace ground connections.

2. CHECK ECT SENSOR POWER SUPPLY CIRCUIT

1. Disconnect engine coolant temperature (ECT) sensor harness connector.
2. Turn ignition switch ON.

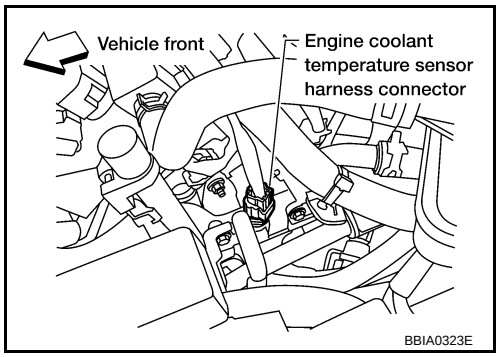

3. Check voltage between ECT sensor terminal 1 and ground with CONSULT-III or tester.

Voltage: Approximately 5V

OK or NG

OK >> GO TO 3.
NG >> Repair open circuit or short to ground or short to power in harness or connectors.

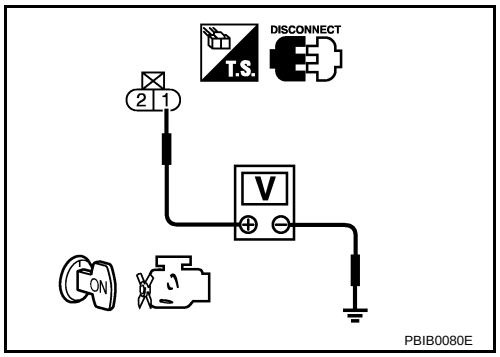

3. CHECK ECT SENSOR GROUND CIRCUIT FOR OPEN AND SHORT

1. Turn ignition switch OFF.
2. Disconnect ECM harness connector.
3. Check harness continuity between ECT sensor terminal 2 and ECM terminal 67.
   Refer to Wiring Diagram.

Continuity should exist.

4. Also check harness for short to ground and short to power.

OK or NG

OK >> GO TO 4.
NG >> Repair open circuit or short to ground or short to power in harness or connectors.

4. CHECK ENGINE COOLANT TEMPERATURE SENSOR

Refer to EC-192, "Component Inspection".

OK or NG

OK >> GO TO 5.
NG >> Replace engine coolant temperature sensor.

5. CHECK INTERMITTENT INCIDENT

Refer to EC-130.

>> **INSPECTION END**

Component Inspection

INFOID:0000000001717288

ENGINE COOLANT TEMPERATURE SENSOR

1. Check resistance between engine coolant temperature sensor terminals 1 and 2 as shown in the figure.

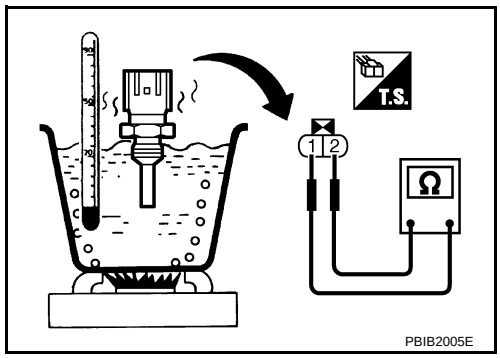

<Reference data>

Engine coolant temperature °C (°F)	Resistance kΩ
20 (68)	2.1 - 2.9
50 (122)	0.68 - 1.00
90 (194)	0.236 - 0.260

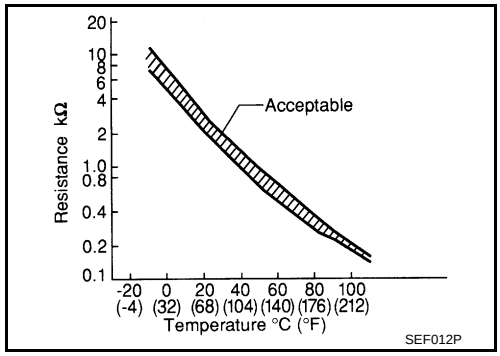

2. If NG, replace engine coolant temperature sensor.

Removal and Installation

INFOID:0000000001717289

ENGINE COOLANT TEMPERATURE SENSOR

Refer to CO-24.

DTC P0122, P0123 TP SENSOR

Component Description

INFOID:0000000001717290

Electric throttle control actuator consists of throttle control motor, throttle position sensor, etc. The throttle position sensor responds to the throttle valve movement.
The throttle position sensor has the two sensors. These sensors are a kind of potentiometers which transform the throttle valve position into output voltage, and emit the voltage signal to the ECM. In addition, these sensors detect the opening and closing speed of the throttle valve and feed the voltage signals to the ECM. The ECM judges the current opening angle of the throttle valve from these signals and the ECM controls the throttle control motor to make the throttle valve opening angle properly in response to driving condition.

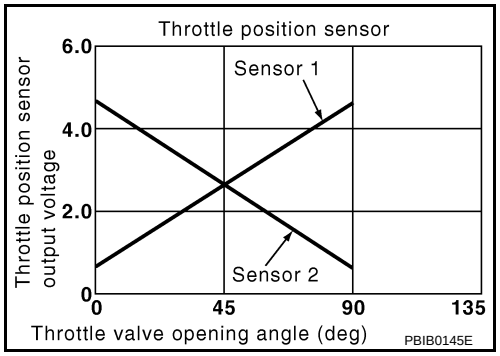

CONSULT-III Reference Value in Data Monitor Mode

INFOID:0000000001717291

Specification data are reference values.

MONITOR ITEM	CONDITION		SPECIFICATION
TP SEN 1-B1 TP SEN 2-B1*	• Ignition switch: ON (Engine stopped) • Shift lever: D	Accelerator pedal: Fully released	More than 0.36V
		Accelerator pedal: Fully depressed	Less than 4.75V

*: Throttle position sensor 2 signal is converted by ECM internally. Thus, it differs from ECM terminal voltage signal.

On Board Diagnosis Logic

INFOID:0000000001717292

These self-diagnoses have the one trip detection logic.

DTC No.	Trouble diagnosis name	DTC detecting condition	Possible cause
P0122 0122	Throttle position sensor 2 circuit low input	An excessively low voltage from the TP sensor 2 is sent to ECM.	• Harness or connectors (TP sensor 2 circuit is open or shorted.) (APP sensor 2 circuit is shorted.) • Electric throttle control actuator (TP sensor 2) Accelerator pedal position sensor. (APP sensor 2)
P0123 0123	Throttle position sensor 2 circuit high input	An excessively high voltage from the TP sensor 2 is sent to ECM.	

FAIL-SAFE MODE

When the malfunction is detected, ECM enters fail-safe mode and the MIL lights up.

Engine operation condition in fail-safe mode
The ECM controls the electric throttle control actuator in regulating the throttle opening in order for the idle position to be within +10 degrees. The ECM regulates the opening speed of the throttle valve to be slower than the normal condition. So, the acceleration will be poor.

DTC Confirmation Procedure

INFOID:0000000001717293

NOTE:
If DTC Confirmation Procedure has been previously conducted, always perform the following before conducting the next step.
1. Turn ignition switch OFF and wait at least 10 seconds.
2. Turn ignition switch ON.
3. Turn ignition switch OFF and wait at least 10 seconds.

TESTING CONDITION:
Before performing the following procedure, confirm that battery voltage is more than 10V at idle.

1. Start engine and let it idle for 1 second.

2. Check DTC.
3. If DTC is detected, go to EC-195, "Diagnosis Procedure".

Wiring Diagram

INFOID:0000000001717294

EC-TPS2-01

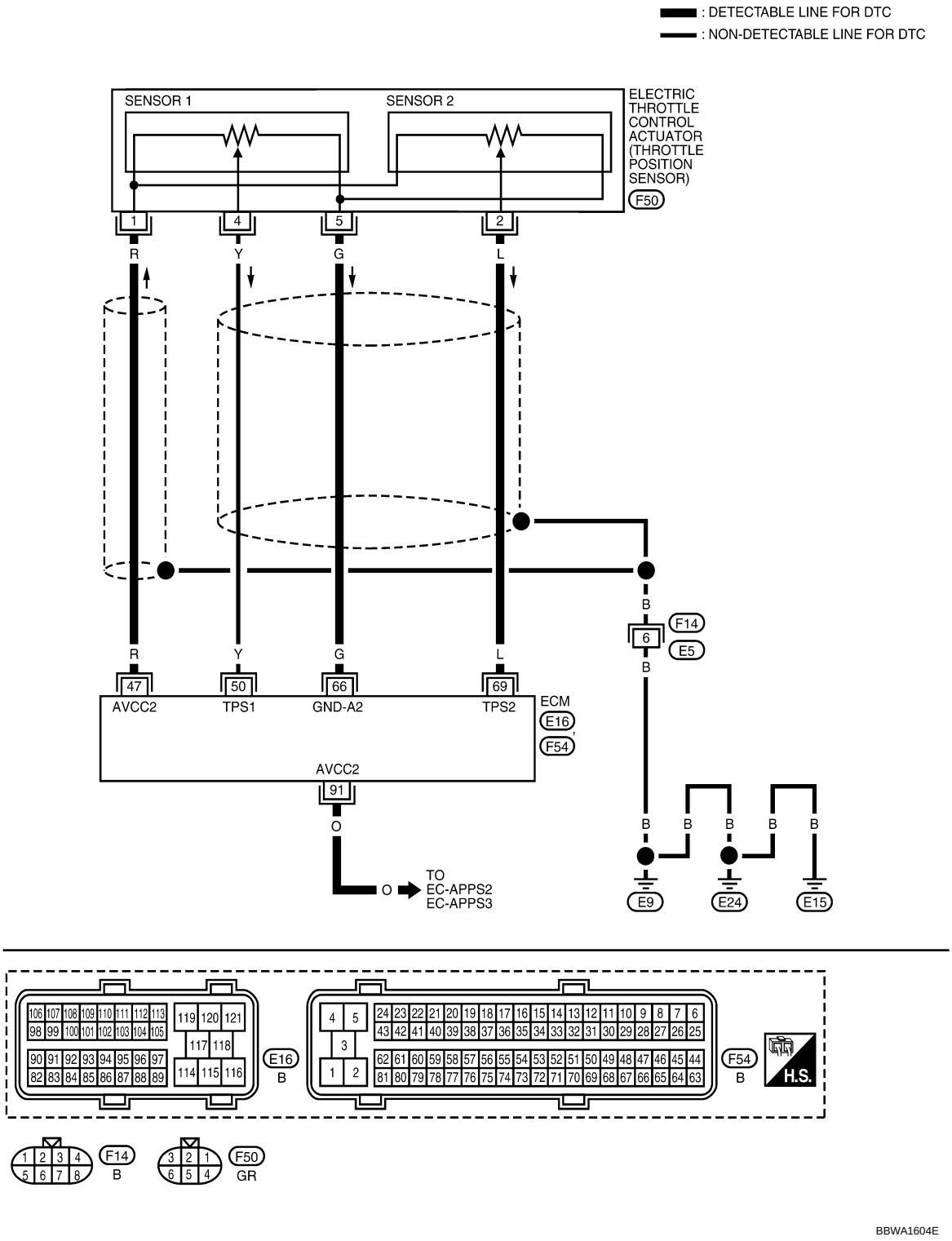

Specification data are reference values and are measured between each terminal and ground.

CAUTION:

Do not use ECM ground terminals when measuring input/output voltage. Doing so may result in damage to the ECM's transistor. Use a ground other than ECM terminals, such as the ground.

TERMINAL NO.	WIRE COLOR	ITEM	CONDITION	DATA (DC Voltage)
47	R	Throttle position sensor power supply	**[Ignition switch: ON]**	Approximately 5V
50	Y	Throttle position sensor 1	**[Ignition switch: ON]** • Engine stopped • Shift lever: D • Accelerator pedal: Fully released	More than 0.36V
			[Ignition switch: ON] • Engine stopped • Shift lever: D • Accelerator pedal: Fully depressed	Less than 4.75V
66	G	Throttle position sensor ground	**[Engine is running]** • **Warm-up condition** • Idle speed	Approximately 0V
69	L	Throttle position sensor 2	**[Ignition switch: ON]** • Engine stopped • Shift lever: D • Accelerator pedal: Fully released	Less than 4.75V
			[Ignition switch: ON] • Engine stopped • Shift lever: D • Accelerator pedal: Fully depressed	More than 0.36V
91	O	APP sensor 2 power supply	**[Ignition switch: ON]**	Approximately 5V

Diagnosis Procedure

INFOID:0000000001717295

1. CHECK GROUND CONNECTIONS

1. Turn ignition switch OFF.
2. Loosen and retighten three ground screws on the body. Refer to EC-138, "Ground Inspection".

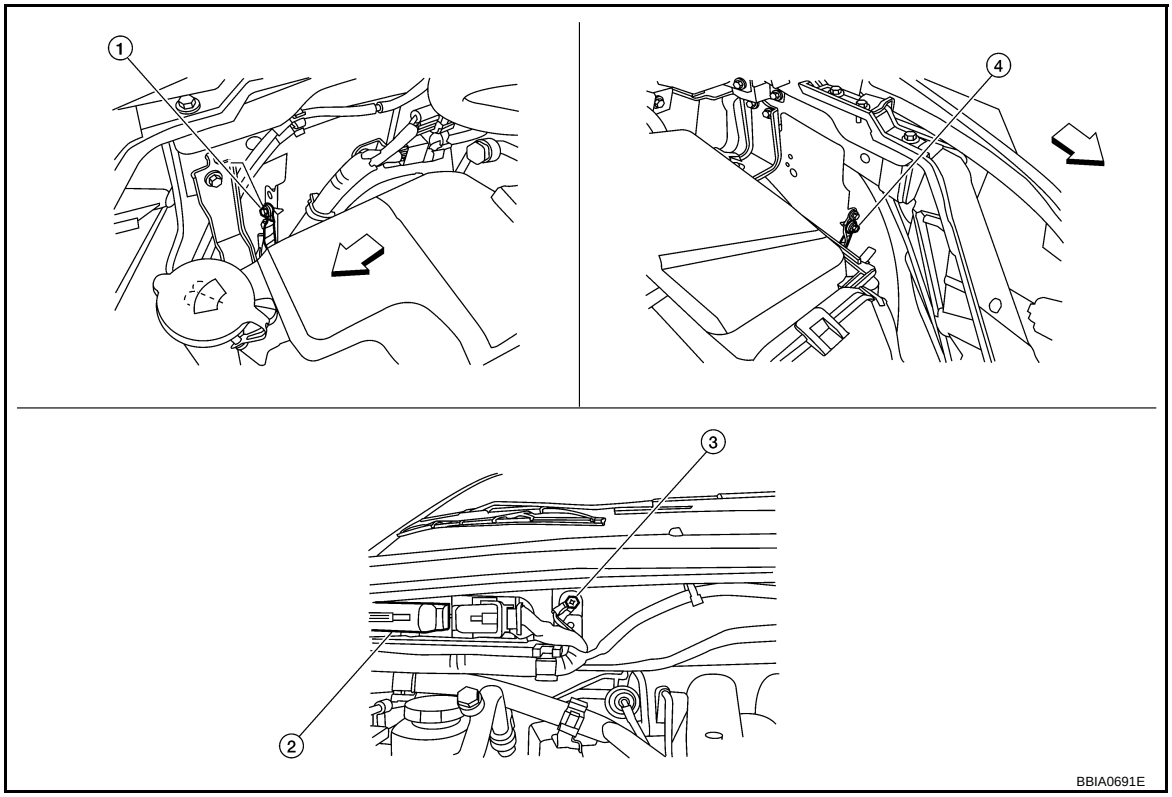

⇦: Vehicle front

1. Body ground E24
2. ECM
3. Body ground E9
4. Body ground E15

OK or NG

OK >> GO TO 2.
NG >> Repair or replace ground connections.

2. CHECK THROTTLE POSITION SENSOR 2 POWER SUPPLY CIRCUIT-I

1. Disconnect electric throttle control actuator harness connector.
2. Turn ignition switch ON.

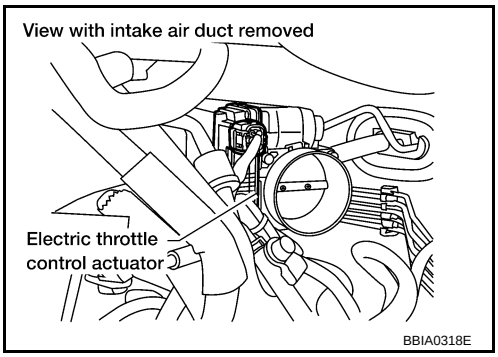

3. Check voltage between electric throttle control actuator terminal 1 and ground with CONSULT-III or tester.

Voltage: Approximately 5V

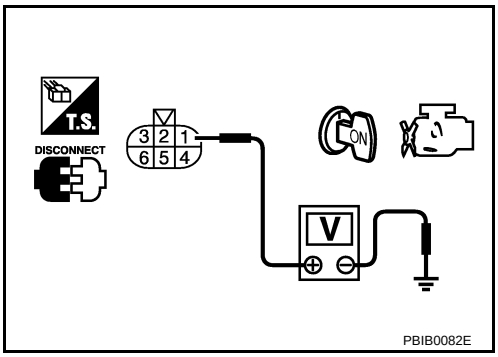

OK or NG

OK >> GO TO 7.
NG >> GO TO 3.

3. CHECK THROTTLE POSITION SENSOR 2 POWER SUPPLY CIRCUIT-II

1. Turn ignition switch OFF.
2. Disconnect ECM harness connector.
3. Check harness continuity between electric throttle control actuator terminal 1 and ECM terminal 47. Refer to Wiring Diagram.

Continuity should exist.

OK or NG

OK >> GO TO 4.
NG >> Repair open circuit.

4. CHECK THROTTLE POSITION SENSOR 2 POWER SUPPLY CIRCUIT-III

Check harness for short to power and short to ground, between the following terminals.

ECM terminal	Sensor terminal	Reference Wiring Diagram
47	Electric throttle control actuator terminal 1	EC-194
91	APP sensor terminal 6	EC-535

OK or NG

OK >> GO TO 5.
NG >> Repair short to ground or short to power in harness or connectors.

5. CHECK APP SENSOR

Refer to EC-539, "Component Inspection".

OK or NG

OK >> GO TO 11.
NG >> GO TO 6.

6. REPLACE ACCELERATOR PEDAL ASSEMBLY

1. Replace accelerator pedal assembly.
2. Perform EC-73, "Accelerator Pedal Released Position Learning".
3. Perform EC-73, "Throttle Valve Closed Position Learning".
4. Perform EC-73, "Idle Air Volume Learning".

>> **INSPECTION END**

7. CHECK THROTTLE POSITION SENSOR 2 GROUND CIRCUIT FOR OPEN AND SHORT

1. Turn ignition switch OFF.
2. Disconnect ECM harness connector.
3. Check harness continuity between ECM terminal 66 and electric throttle control actuator terminal 5. Refer to Wiring Diagram.

Continuity should exist.

4. Also check harness for short to ground and short to power.

OK or NG

OK >> GO TO 8.
NG >> Repair open circuit or short to ground or short to power in harness or connectors.

8. CHECK THROTTLE POSITION SENSOR 2 INPUT SIGNAL CIRCUIT FOR OPEN AND SHORT

1. Check harness continuity between ECM terminal 69 and electric throttle control actuator terminal 2. Refer to Wiring Diagram.

Continuity should exist.

2. Also check harness for short to ground and short to power.

OK or NG

OK >> GO TO 9.
NG >> Repair open circuit or short to ground or short to power in harness or connectors.

9. CHECK THROTTLE POSITION SENSOR

Refer to EC-198, "Component Inspection".

OK or NG

OK >> GO TO 11.
NG >> GO TO 10.

10. REPLACE ELECTRIC THROTTLE CONTROL ACTUATOR

1. Replace the electric throttle control actuator.
2. Perform EC-73, "Throttle Valve Closed Position Learning".
3. Perform EC-73, "Idle Air Volume Learning".

>> **INSPECTION END**

11. CHECK INTERMITTENT INCIDENT

Refer to EC-130.

>> **INSPECTION END**

Component Inspection

INFOID:0000000001717296

THROTTLE POSITION SENSOR

1. Reconnect all harness connectors disconnected.
2. Perform EC-73, "Throttle Valve Closed Position Learning".
3. Turn ignition switch ON.
4. Set shift lever to D position.
5. Check voltage between ECM terminals 50 (TP sensor 1 signal), 69 (TP sensor 2 signal) and ground under the following conditions.

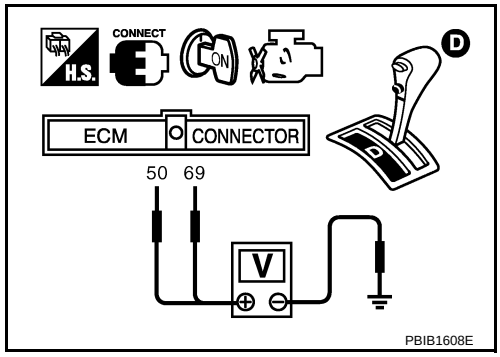

Terminal	Accelerator pedal	Voltage
50 (Throttle position sensor 1)	Fully released	More than 0.36V
	Fully depressed	Less than 4.75V
69 (Throttle position sensor 2)	Fully released	Less than 4.75V
	Fully depressed	More than 0.36V

6. If NG, replace electric throttle control actuator and go to the next step.
7. Perform EC-73, "Throttle Valve Closed Position Learning".
8. Perform EC-73, "Idle Air Volume Learning".

Removal and Installation

INFOID:0000000001717297

ELECTRIC THROTTLE CONTROL ACTUATOR

Refer to EM-17.

DTC P0125 ECT SENSOR

Component Description

INFOID:0000000001717298

NOTE:
If DTC P0125 is displayed with P0117 or P0118, first perform the trouble diagnosis for DTC P0117 or P0118. Refer to EC-188.

The engine coolant temperature sensor is used to detect the engine coolant temperature. The sensor modifies a voltage signal from the ECM. The modified signal returns to the ECM as the engine coolant temperature input. The sensor uses a thermistor which is sensitive to the change in temperature. The electrical resistance of the thermistor decreases as temperature increases.

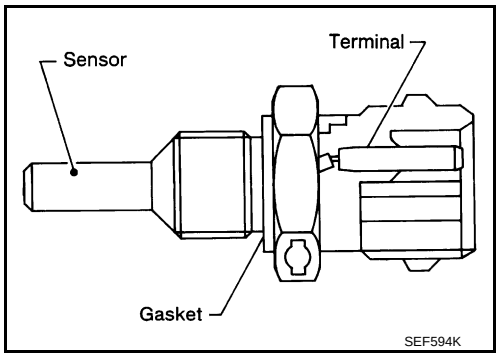

<Reference data>

Engine coolant temperature °C (°F)	Voltage* V	Resistance kΩ
–10 (14)	4.4	7.0 - 11.4
20 (68)	3.5	2.1 - 2.9
50 (122)	2.2	0.68 - 1.00
90 (194)	0.9	0.236 - 0.260

*: This data is reference value and is measured between ECM terminal 73 (Engine coolant temperature sensor) and ground.

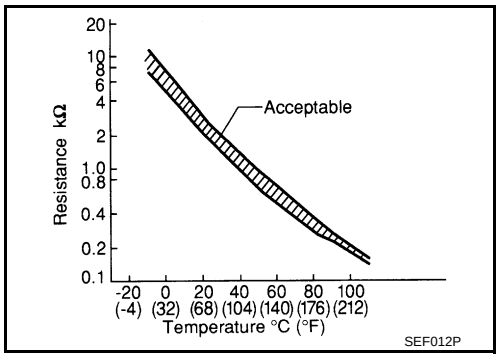

CAUTION:
Do not use ECM ground terminals when measuring input/output voltage. Doing so may result in damage to the ECM's transistor. Use a ground other than ECM terminals, such as the ground.

On Board Diagnosis Logic

INFOID:0000000001717299

DTC No.	Trouble diagnosis name	DTC detecting condition	Possible cause
P0125 0125	Insufficient engine coolant temperature for closed loop fuel control	• Voltage sent to ECM from the sensor is not practical, even when some time has passed after starting the engine. • Engine coolant temperature is insufficient for closed loop fuel control.	• Harness or connectors (High resistance in the circuit) • Engine coolant temperature sensor • Thermostat

DTC Confirmation Procedure

INFOID:0000000001717300

CAUTION:
Be careful not to overheat engine.
NOTE:
If DTC Confirmation Procedure has been previously conducted, always perform the following before conducting the next step.
1. Turn ignition switch OFF and wait at least 10 seconds.
2. Turn ignition switch ON.
3. Turn ignition switch OFF and wait at least 10 seconds.

WITH CONSULT-III

1. Turn ignition switch ON.
2. Select “DATA MONITOR” mode with CONSULT-III.
3. Check that “COOLAN TEMP/S” is above 10°C (50°F).

If it is above 10°C (50°F), the test result will be OK.
If it is below 10°C (50°F), go to following step.

4. Start engine and run it for 65 minutes at idle speed.
   If "COOLAN TEMP/S" increases to more than 10°C (50°F) within 65 minutes, stop engine because the test result will be OK.
5. Check 1st trip DTC.
6. If 1st trip DTC is detected, go to EC-200, "Diagnosis Procedure".

WITH GST

Follow the procedure "WITH CONSULT-III" above.

Diagnosis Procedure

INFOID:0000000001717301

1. CHECK GROUND CONNECTIONS

1. Turn ignition switch OFF.
2. Loosen and retighten three ground screws on the body. Refer to EC-138, "Ground Inspection".

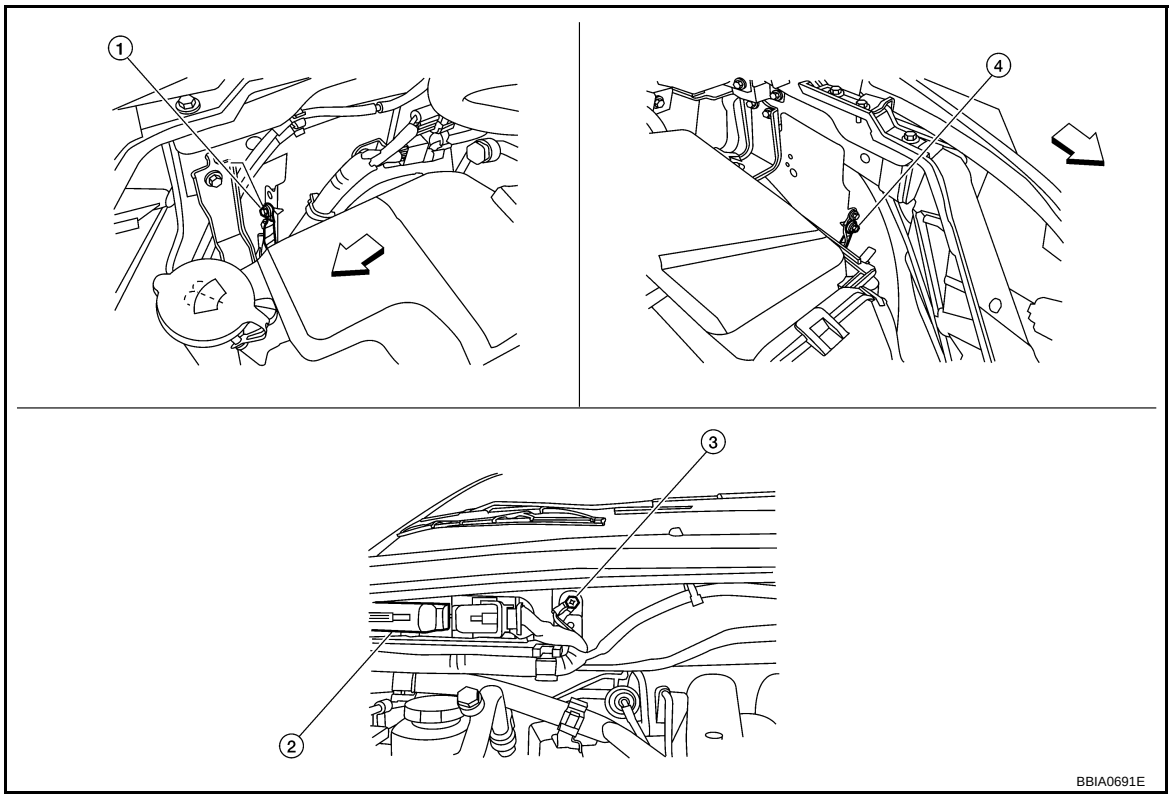

⇦: Vehicle front

1. Body ground E24
2. ECM
3. Body ground E9
4. Body ground E15

OK or NG

OK >> GO TO 2.
NG >> Repair or replace ground connections.

2. CHECK ENGINE COOLANT TEMPERATURE SENSOR

Refer to EC-201, "Component Inspection".

OK or NG

OK >> GO TO 3.
NG >> Replace engine coolant temperature sensor.

3. CHECK THERMOSTAT OPERATION

When the engine is cold [lower than 70°C (158°F)] condition, grasp lower radiator hose and confirm the engine coolant does not flow.

OK or NG

OK >> GO TO 4.
NG >> Repair or replace thermostat. Refer to CO-24.

4. CHECK INTERMITTENT INCIDENT

Refer to EC-130.
Refer to EC-190, "Wiring Diagram".

>> **INSPECTION END**

Component Inspection

INFOID:0000000001717302

ENGINE COOLANT TEMPERATURE SENSOR

1. Check resistance between engine coolant temperature sensor terminals 1 and 2 as shown in the figure.

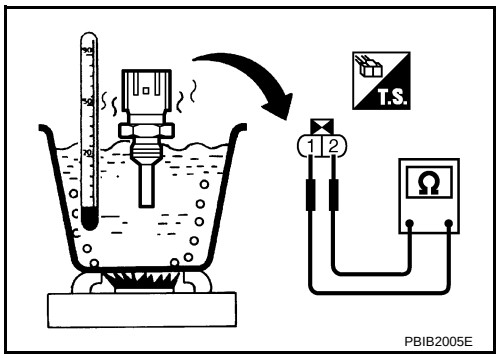

<Reference data>

Engine coolant temperature °C (°F)	Resistance kΩ
20 (68)	2.1 - 2.9
50 (122)	0.68 - 1.00
90 (194)	0.236 - 0.260

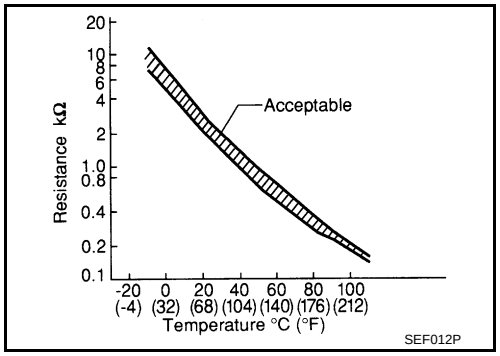

2. If NG, replace engine coolant temperature sensor.

Removal and Installation

INFOID:0000000001717303

ENGINE COOLANT TEMPERATURE SENSOR

Refer to CO-24.

DTC P0127 IAT SENSOR

Component Description

INFOID:0000000001717304

The intake air temperature sensor is built into mass air flow sensor. The sensor detects intake air temperature and transmits a signal to the ECM.
The temperature sensing unit uses a thermistor which is sensitive to the change in temperature. Electrical resistance of the thermistor decreases in response to the temperature rise.

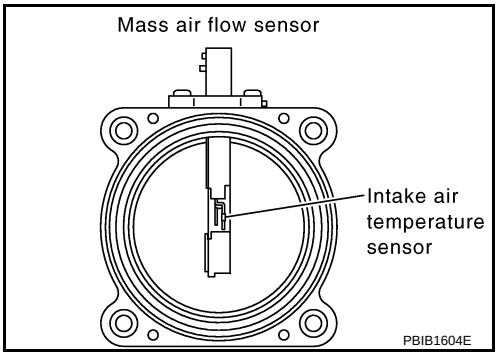

<Reference data>

Intake air temperature °C (°F)	Voltage* V	Resistance kΩ
25 (77)	3.32	1.800 - 2.200
80 (176)	1.23	0.283 - 0.359

*: This data is reference value and is measured between ECM terminal 34 (Intake air temperature sensor) and ground.

CAUTION:
Do not use ECM ground terminals when measuring input/output voltage. Doing so may result in damage to the ECM's transistor. Use a ground other than ECM terminals, such as the ground.

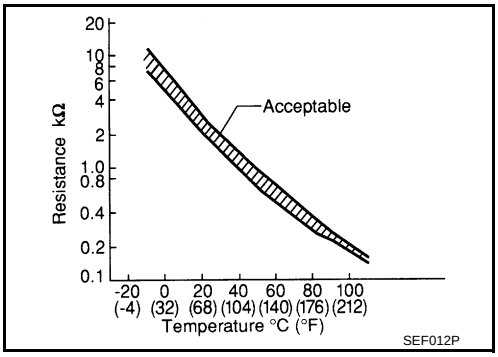

On Board Diagnosis Logic

INFOID:0000000001717305

DTC No.	Trouble diagnosis name	DTC detecting condition	Possible cause
P0127 0127	Intake air temperature too high	Rationally incorrect voltage from the sensor is sent to ECM, compared with the voltage signal from engine coolant temperature sensor.	• Harness or connectors (The sensor circuit is open or shorted) • Intake air temperature sensor

DTC Confirmation Procedure

INFOID:0000000001717306

NOTE:
If DTC Confirmation Procedure has been previously conducted, always perform the following before conducting the next step.
1. Turn ignition switch OFF and wait at least 10 seconds.
2. Turn ignition switch ON.
3. Turn ignition switch OFF and wait at least 10 seconds.

CAUTION:
Always drive vehicle at a safe speed.
TESTING CONDITION:
This test may be conducted with the drive wheels lifted in the shop or by driving the vehicle. If a road test is expected to be easier, it is unnecessary to lift the vehicle.

WITH CONSULT-III

1. Wait until engine coolant temperature is less than 90°C (194°F)

a. Turn ignition switch ON.
b. Select “DATA MONITOR” mode with CONSULT-III.
c. Check the engine coolant temperature.

d. If the engine coolant temperature is not less than 90°C (194°F), turn ignition switch OFF and cool down engine.
   - Perform the following steps before engine coolant temperature is above 90°C (194°F).
2. Turn ignition switch ON.
3. Select “DATA MONITOR” mode with CONSULT-III.
4. Start engine.
5. Hold vehicle speed at more than 70 km/h (43 MPH) for 100 consecutive seconds.
6. Check 1st trip DTC.
7. If 1st trip DTC is detected, go to EC-203, "Diagnosis Procedure".

WITH GST

Follow the procedure “WITH CONSULT-III” above.

Diagnosis Procedure

INFOID:0000000001717307

1. CHECK GROUND CONNECTIONS

1. Turn ignition switch OFF.
2. Loosen and retighten three ground screws on the body. Refer to EC-138, "Ground Inspection".

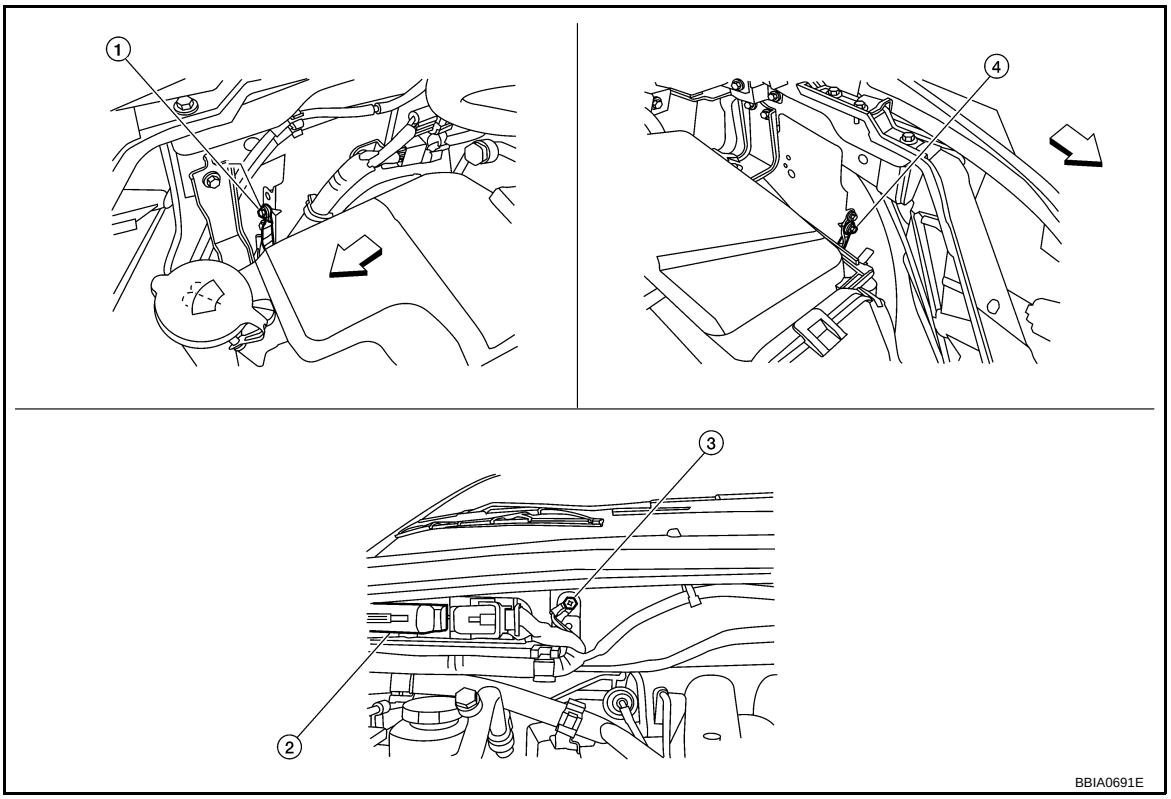

⇦: Vehicle front

1. Body ground E24
2. ECM
3. Body ground E9
4. Body ground E15

OK or NG

OK >> GO TO 2.
NG >> Repair or replace ground connections.

2. CHECK INTAKE AIR TEMPERATURE SENSOR

Refer to EC-204, "Component Inspection".

OK or NG

OK >> GO TO 3.
NG >> Replace mass air flow sensor (with intake air temperature sensor).

3. CHECK INTERMITTENT INCIDENT

Refer to EC-130.
Refer to EC-185, "Wiring Diagram".

>> **INSPECTION END**

Component Inspection

INFOID:0000000001717308

INTAKE AIR TEMPERATURE SENSOR

1. Check resistance between intake air temperature sensor terminals 5 and 6 under the following conditions.

Intake air temperature °C (°F)	Resistance kΩ
25 (77)	1.800 - 2.200

2. If NG, replace mass air flow sensor (with intake air temperature sensor).

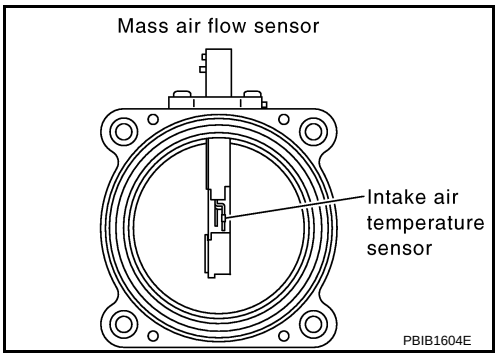

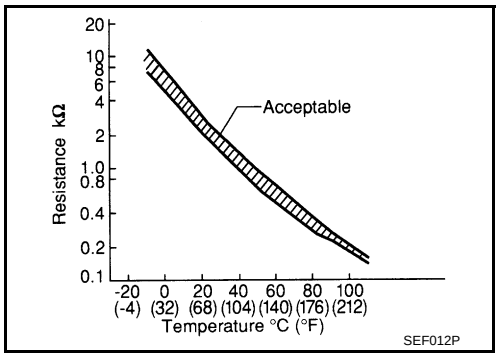

Removal and Installation

INFOID:0000000001717309

MASS AIR FLOW SENSOR

Refer to EM-15.

DTC P0128 THERMOSTAT FUNCTION

On Board Diagnosis Logic

INFOID:0000000001717310

Engine coolant temperature has not risen enough to open the thermostat even though the engine has run long enough.
This is due to a leak in the seal or the thermostat stuck open.

DTC No.	Trouble diagnosis name	DTC detecting condition	Possible cause
P0128 0128	Thermostat function	The engine coolant temperature does not reach to specified temperature even though the engine has run long enough.	• Thermostat • Leakage from sealing portion of thermostat • Engine coolant temperature sensor

DTC Confirmation Procedure

INFOID:0000000001717311

NOTE:
If DTC Confirmation Procedure has been previously conducted, always perform the following before conducting the next step.
1. Turn ignition switch OFF and wait at least 10 seconds.
2. Turn ignition switch ON.
3. Turn ignition switch OFF and wait at least 10 seconds.

TESTING CONDITION:
- **For best results, perform at ambient temperature of –10°C (14°F) or higher.**
- **For best results, perform at engine coolant temperature of –10°C (14°F) to 71°C (160°F).**
- **Before performing the following procedure, do not fill with the fuel.**

WITH CONSULT-III

1. Turn A/C switch OFF.
2. Turn blower fan switch OFF.
3. Turn ignition switch ON.
4. Select “COOLAN TEMP/S” in “DATA MONITOR” mode with CONSULT-III.
5. Check the indication of “COOLAN TEMP/S”.
   If it is below 71°C (160°F), go to following step.
   If it is above 71°C (160°F), cool down the engine to less than 71°C (160°F), then go to next step.
6. Start engine.
7. Wait at idle for a least 30 minutes.
   If “COOLAN TEMP/S” increases to more than 71°C (160°F) within 30 minutes, turn ignition switch OFF because the test result will be OK.
8. Check 1st trip DTC.
9. If 1st trip DTC is detected, go to EC-205, "Diagnosis Procedure".

WITH GST

Follow the procedure “WITH CONSULT-III” above.

Diagnosis Procedure

INFOID:0000000001717312

1. CHECK ENGINE COOLANT TEMPERATURE SENSOR

Refer to EC-205, "Component Inspection".

OK or NG

OK >> **INSPECTION END**
NG >> Replace engine coolant temperature sensor.

Component Inspection

INFOID:0000000001717313

ENGINE COOLANT TEMPERATURE SENSOR

1. Check resistance between engine coolant temperature sensor terminals 1 and 2.

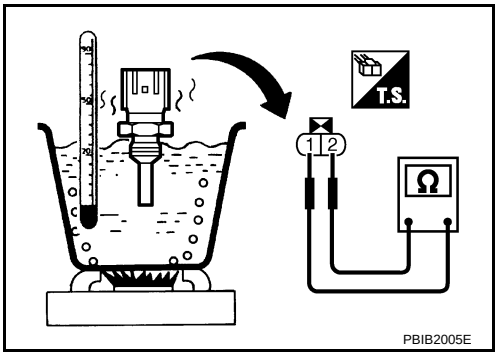

<Reference data>

Temperature °C (°F)	Resistance kΩ
20 (68)	2.1 - 2.9
50 (122)	0.68 - 1.0
90 (194)	0.236 - 0.260

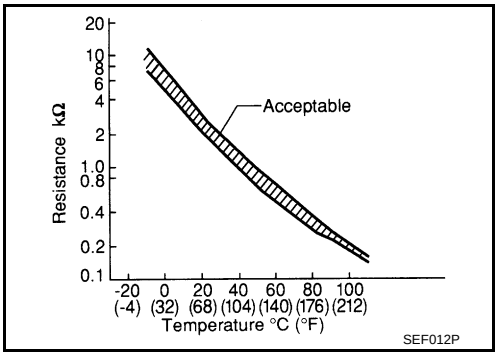

2. If NG, replace engine coolant temperature sensor.

Removal and Installation

INFOID:0000000001717314

ENGINE COOLANT TEMPERATURE SENSOR
Refer to CO-24.

DTC P0130, P0150 A/F SENSOR 1

Component Description

INFOID:0000000001717315

The A/F sensor is a planar dual-cell limit current sensor. The sensor element of the A/F sensor is the combination of a Nernst concentration cell (sensor cell) with an oxygen-pump cell, which transports ions. It has a heater in the element.

The sensor is capable of precise measurement $\lambda = 1$, but also in the lean and rich range. Together with its control electronics, the sensor outputs a clear, continuous signal throughout a wide λ range ($0.7 < \lambda <$ air).

The exhaust gas components diffuse through the diffusion gap at the electrode of the oxygen pump and Nernst concentration cell, where they are brought to thermodynamic balance.

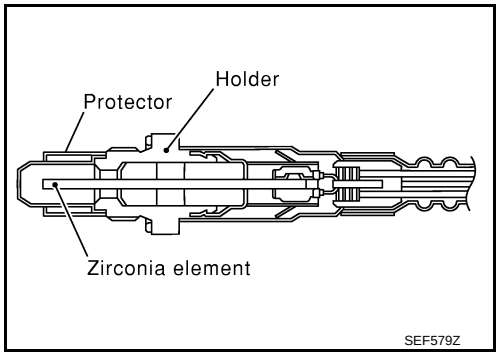

An electronic circuit controls the pump current through the oxygen-pump cell so that the composition of the exhaust gas in the diffusion gap remains constant at $\lambda = 1$. Therefore, the A/F sensor is able to indicate air/fuel ratio by this pumping of current. In addition, a heater is integrated in the sensor to ensure the required operating temperature of 700 - 800°C (1,292 - 1,472°F).

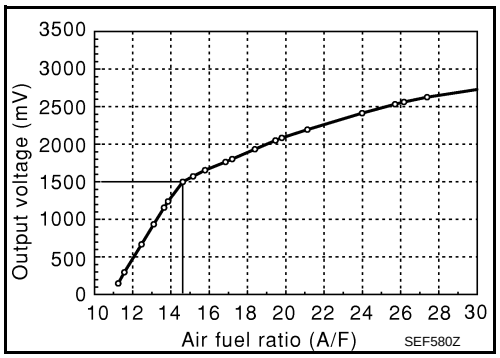

CONSULT-III Reference Value in Data Monitor Mode

INFOID:0000000001717316

Specification data are reference values.

MONITOR ITEM	CONDITION		SPECIFICATION
A/F SEN1 (B1) A/F SEN1 (B2)	• Engine: After warming up	Maintaining engine speed at 2,000 rpm	Fluctuates around 1.5V

On Board Diagnosis Logic

INFOID:0000000001717317

To judge the malfunction, the diagnosis checks that the A/F signal computed by ECM from the air fuel ratio (A/F) sensor 1 signal fluctuates according to fuel feedback control.

DTC No.	Trouble diagnosis name	DTC detecting condition		Possible Cause
P0130 0130 (Bank 1)	Air fuel ratio (A/F) sensor 1 circuit	A)	The A/F signal computed by ECM from the A/F sensor 1 signal is constantly in the range other than approx. 1.5V.	• Harness or connectors (The A/F sensor 1 circuit is open or shorted.) • Air fuel ratio (A/F) sensor 1
		B)	The A/F signal computed by ECM from the A/F sensor 1 signal is constantly approx. 1.5V.	
P0150 0150 (Bank 2)		A)	The A/F signal computed by ECM from the A/F sensor 1 signal is constantly in the range other than approx. 1.5V.	
		B)	The A/F signal computed by ECM from the A/F sensor 1 signal is constantly approx. 1.5V.	

DTC Confirmation Procedure

INFOID:0000000001717318

Perform PROCEDURE FOR MALFUNCTION A first.
If the DTC cannot be confirmed, perform PROCEDURE FOR MALFUNCTION B.
NOTE:

If DTC Confirmation Procedure has been previously conducted, always perform the following before conducting the next step.
1. Turn ignition switch OFF and wait at least 10 seconds.
2. Turn ignition switch ON.
3. Turn ignition switch OFF and wait at least 10 seconds.

TESTING CONDITION:
Before performing the following procedure, confirm that battery voltage is more than 11V at idle.

PROCEDURE FOR MALFUNCTION A

1. Start engine and warm it up to normal operating temperature.
2. Let engine idle for 2 minutes.
3. Check 1st trip DTC.
4. If 1st trip DTD is detected, go to EC-213, "Diagnosis Procedure".

PROCEDURE FOR MALFUNCTION B

CAUTION:
Always drive vehicle at a safe speed.

With CONSULT-III

1. Start engine and warm it up to normal operating temperature.
2. Select “A/F SEN1 (B1)” or “A/F SEN1 (B2)” in “DATA MONITOR” mode with CONSULT-III.
3. Check “A/F SEN1 (B1)” or “A/F SEN1 (B2)” indication.
   If the indication is constantly approx. 1.5V and does not fluctuates, go to EC-213, "Diagnosis Procedure".
   If the indication fluctuates around 1.5V, go to next step.
4. Select “A/F SEN1 (B1) P1276” (for DTC P0130) or “A/F SEN1 (B2) P1286” (for DTC P0150) of “A/F SEN1” in “DTC WORK SUPPORT” mode with CONSULT-III.
5. Touch “START”.
6. When the following conditions are met, “TESTING” will be displayed on the CONSULT-III screen.

ENG SPEED	1,000 - 3,200 rpm
VHCL SPEED SE	More than 64 km/h (40 MPH)
B/FUEL SCHDL	1.0 - 8.0 msec
Shift lever	D position with “OD” OFF

   If “TESTING” is not displayed after 20 seconds, retry from step 2.
7. Release accelerator pedal fully.
   NOTE:
   Never apply brake during releasing the accelerator pedal.
8. Make sure that “TESTING” changes to “COMPLETED”.
   If “TESTING” changed to “OUT OF CONDITION”, retry from step 6.
9. Make sure that “OK” is displayed after touching “SELF-DIAG RESULT”.
   If “NG” is displayed, go to EC-213, "Diagnosis Procedure".

Overall Function Check

INFOID:0000000001717319

Use this procedure to check the overall function of the A/F sensor 1 circuit. During this check, a 1st trip DTC might not be confirmed.

WITH GST

1. Start engine and warm it up to normal operating temperature.
2. Drive the vehicle at a speed of 80 km/h (50 MPH) for a few minutes in the suitable gear position.
3. Set D position with “OD” OFF, then release the accelerator pedal fully until the vehicle speed decreases to 50 km/h (30 MPH).
   NOTE:
   Never apply brake during releasing the accelerator pedal.
4. Repeat steps 2 to 3 five times.
5. Stop the vehicle and turn ignition switch OFF.

6. Turn ignition switch ON.
7. Turn ignition switch OFF and wait at least 10 seconds.
8. Restart engine.
9. Repeat steps 2 to 3 five times.
10. Stop the vehicle and connect GST to the vehicle.
11. Make sure that no DTC is displayed.
    If 1st trip DTC is displayed, go to EC-213, "Diagnosis Procedure".

Wiring Diagram

INFOID:0000000001717320

BANK 1

EC-AF1B1-01

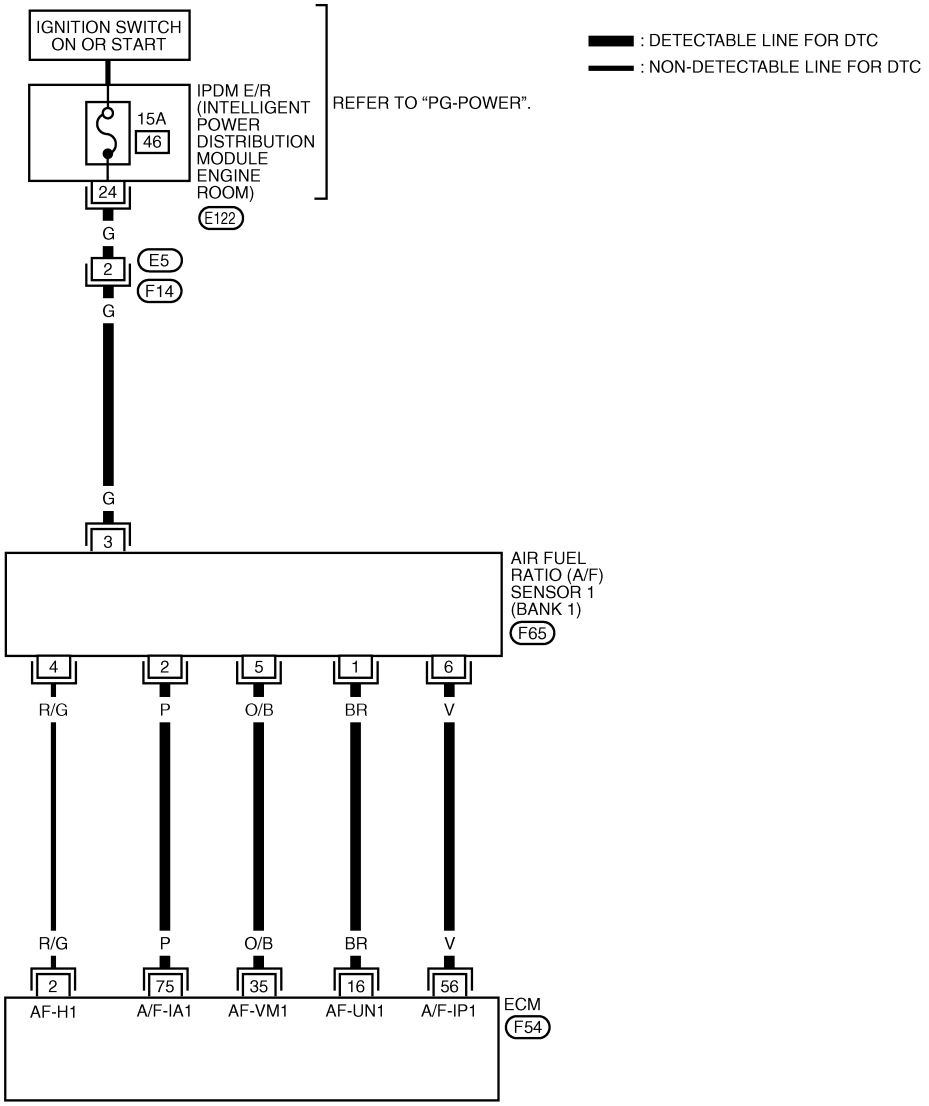

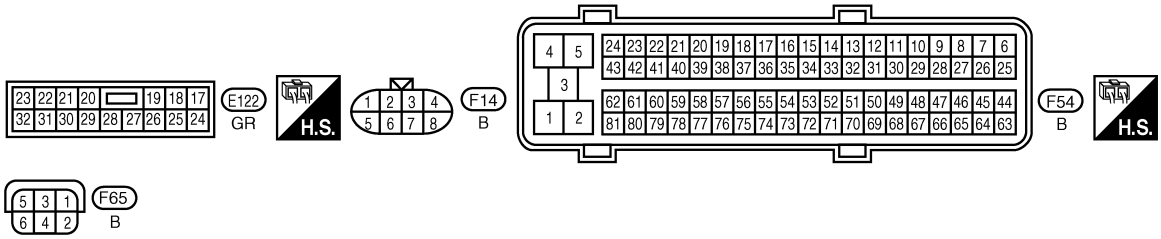

BBWA2503E

Specification data are reference values and are measured between each terminal and ground.
Pulse signal is measured by CONSULT-III.

CAUTION:

Do not use ECM ground terminals when measuring input/output voltage. Doing so may result in damage to the ECM's transistor. Use a ground other than ECM terminals, such as the ground.

TERMINAL NO.	WIRE COLOR	ITEM	CONDITION	DATA (DC Voltage)
2	R/G	A/F sensor 1 heater (Bank 1)	**[Engine is running]** • **Warm-up condition** • Idle speed	Approximately 5V★ 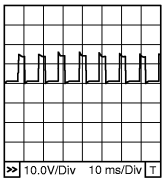 PBIB1584E
16	BR	A/F sensor 1 (Bank 1)	**[Engine is running]** • **Warm-up condition** • Idle speed	Approximately 3.1V
35	O/B			Approximately 2.6V
56	V			Approximately 2.3V
75	P			Approximately 2.3V

★: Average voltage for pulse signal (Actual pulse signal can be confirmed by oscilloscope.)

BANK 2

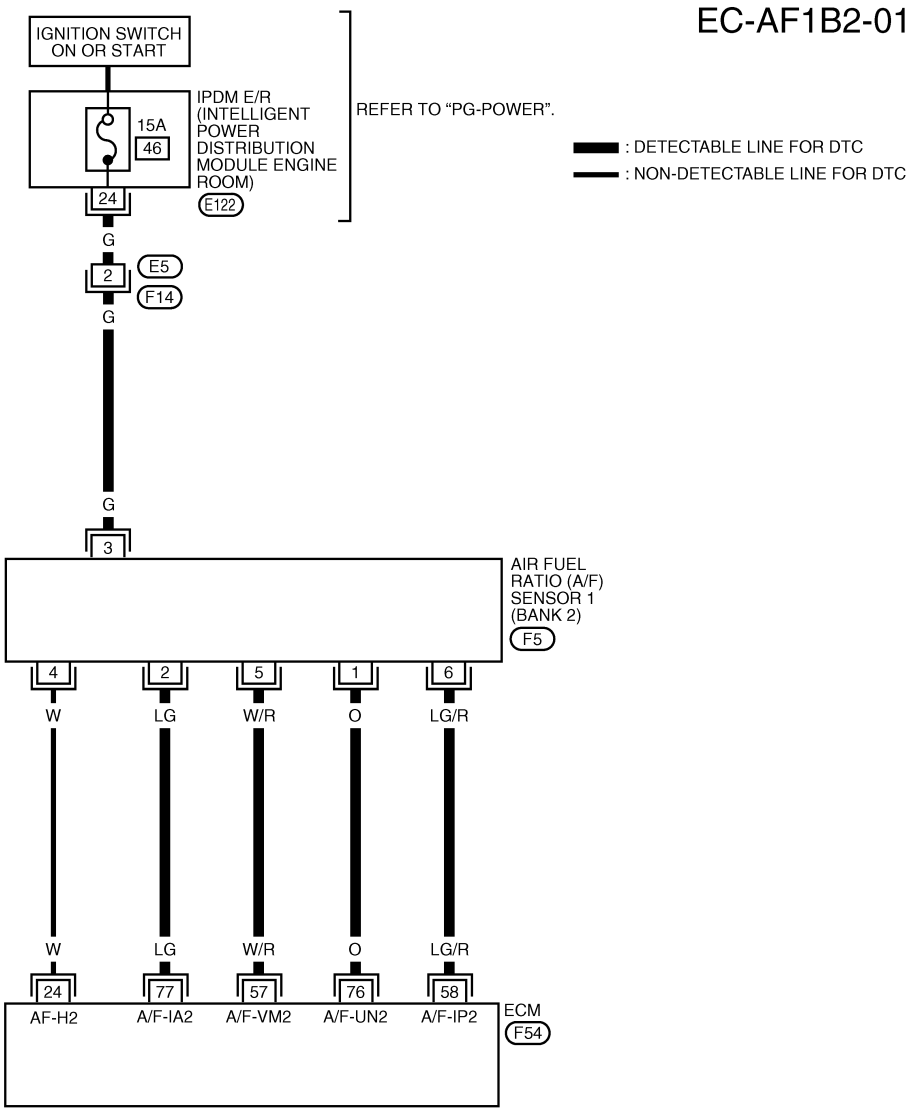

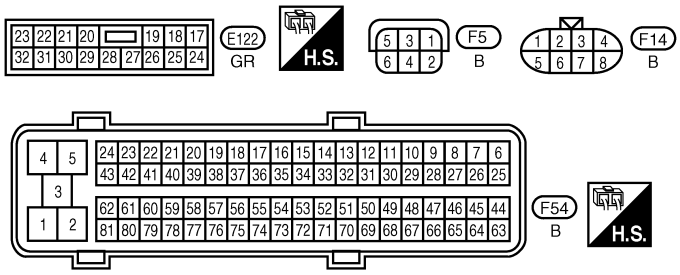

BBWA2504E

Specification data are reference values and are measured between each terminal and ground.
Pulse signal is measured by CONSULT-III.

CAUTION:

Do not use ECM ground terminals when measuring input/output voltage. Doing so may result in damage to the ECM's transistor. Use a ground other than ECM terminals, such as the ground.

TERMINAL NO.	WIRE COLOR	ITEM	CONDITION	DATA (DC Voltage)
24	W	A/F sensor 1 heater (Bank 2)	**[Engine is running]** • **Warm-up condition** • Idle speed	Approximately 5V★ 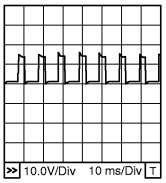 PBIB1584E
57	W/R	A/F sensor 1 (Bank 2)	**[Engine is running]** • **Warm-up condition** • Idle speed	Approximately 2.6V
58	LG/R			Approximately 2.3V
76	O			Approximately 3.1V
77	LG			Approximately 2.3V

★: Average voltage for pulse signal (Actual pulse signal can be confirmed by oscilloscope.)

Diagnosis Procedure

INFOID:0000000001717321

1. CHECK GROUND CONNECTIONS

1. Turn ignition switch OFF.
2. Loosen and retighten three ground screws on the body. Refer to EC-138, "Ground Inspection".

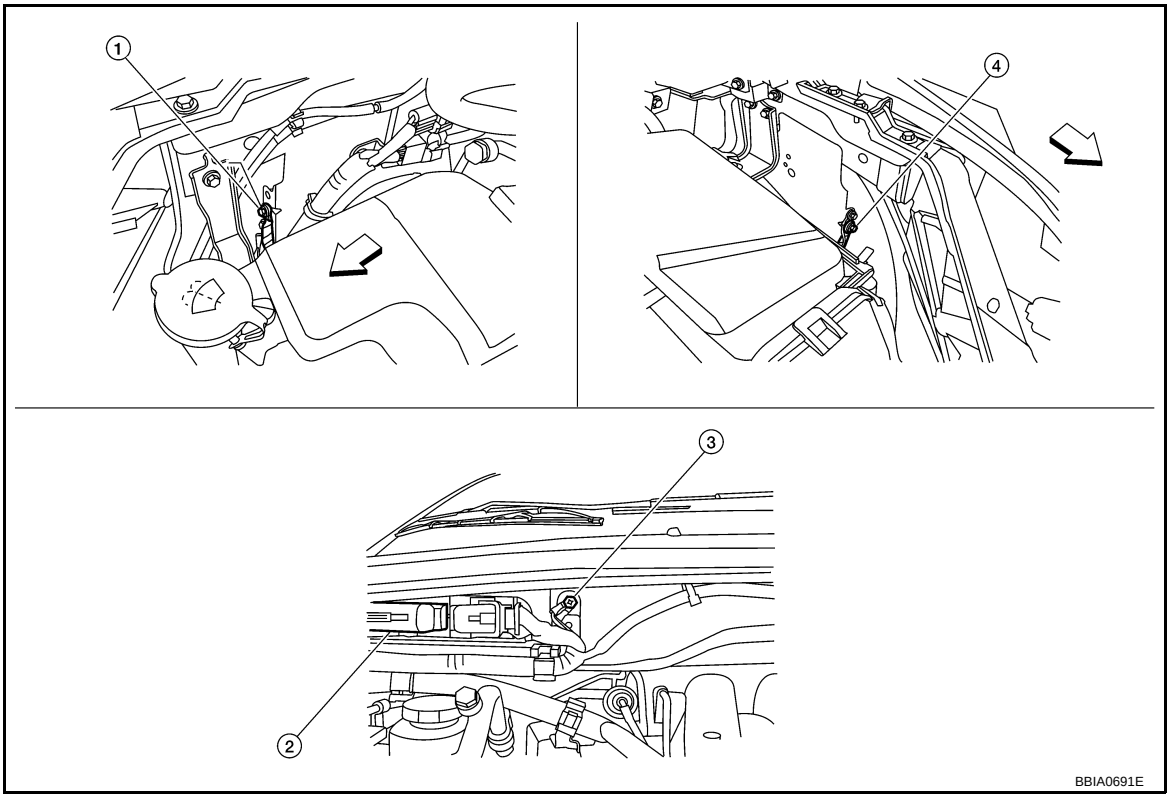

⇦: Vehicle front

1. Body ground E24
2. ECM
3. Body ground E9
4. Body ground E15

OK or NG

OK >> GO TO 2.
NG >> Repair or replace ground connections.

2. CHECK AIR FUEL RATIO (A/F) SENSOR 1 POWER SUPPLY CIRCUIT

1. Disconnect air fuel ratio (A/F) sensor 1 harness connector.

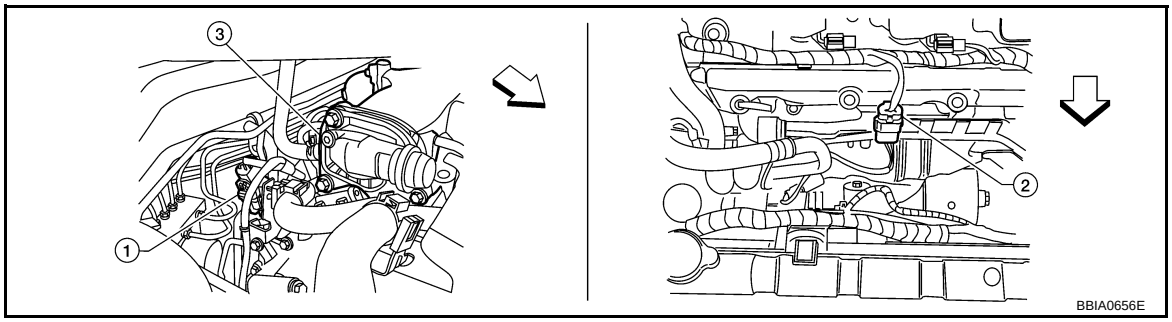

⇦: Vehicle front

1. Air fuel ratio (A/F) sensor 1 (bank 1) harness connector
2. Air fuel ratio (A/F) sensor 1 (bank 2) harness connector
3. Intake manifold collector

2. Turn ignition switch ON.
3. Check voltage between A/F sensor 1 terminal 3 and ground with CONSULT-III or tester.

Voltage: Battery voltage

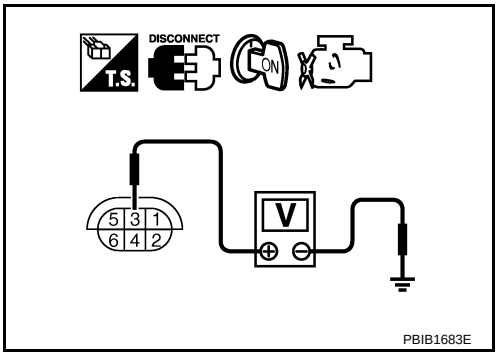

OK or NG

OK >> GO TO 4.
NG >> GO TO 3.

3. DETECT MALFUNCTIONING PART

Check the following.
- Harness connectors E5, F14
- IPDM E/R harness connector E122
- 15A fuse
- Harness for open or short between A/F sensor 1 and fuse

>> Repair or replace harness or connectors.

4. CHECK A/F SENSOR 1 INPUT SIGNAL CIRCUIT FOR OPEN AND SHORT

1. Turn ignition switch OFF.
2. Disconnect ECM harness connector.
3. Check harness continuity between the following terminals.
   Refer to Wiring Diagram.

	A/F sensor 1 terminal	ECM terminal
Bank1	1	16
	2	75
	5	35
	6	56
Bank 2	1	76
	2	77
	5	57
	6	58

Continuity should exist.

4. Check harness continuity between the following terminals and ground.
Refer to Wiring Diagram.

Bank 1		Bank 2	
A/F sensor 1 terminal	ECM terminal	A/F sensor 1 terminal	ECM terminal
1	16	1	76
2	75	2	77
5	35	5	57
6	56	6	58

Continuity should not exist.

5. Also check harness for short to power.

OK or NG

OK >> GO TO 5.
NG >> Repair open circuit or short to ground or short to power in harness or connectors.

5. CHECK INTERMITTENT INCIDENT

Perform EC-130.

OK or NG

OK >> GO TO 6.
NG >> Repair or replace.

6. REPLACE AIR FUEL RATIO (A/F) SENSOR 1

Replace malfunctioning air fuel ratio (A/F) sensor 1.

CAUTION:

- **Discard any air fuel ratio (A/F) sensor which has been dropped from a height of more than 0.5 m (19.7 in) onto a hard surface such as a concrete floor; use a new one.**
- **Before installing new air fuel ratio (A/F) sensor, clean exhaust system threads using Heated Oxygen Sensor Thread Cleaner tool J-43897-18 or J-43897-12 and approved anti-seize lubricant.**

>> **INSPECTION END**

Removal and Installation

INFOID:0000000001717322

AIR FUEL RATIO (A/F) SENSOR 1

Refer to EM-25.

DTC P0131, P0151 A/F SENSOR 1

Component Description

INFOID:0000000001717323

The A/F sensor is a planar dual-cell limit current sensor. The sensor element of the A/F sensor is the combination of a Nernst concentration cell (sensor cell) with an oxygen-pump cell, which transports ions. It has a heater in the element.

The sensor is capable of precise measurement λ = 1, but also in the lean and rich range. Together with its control electronics, the sensor outputs a clear, continuous signal throughout a wide λ range (0.7 < λ < air).

The exhaust gas components diffuse through the diffusion gap at the electrode of the oxygen pump and Nernst concentration cell, where they are brought to thermodynamic balance.

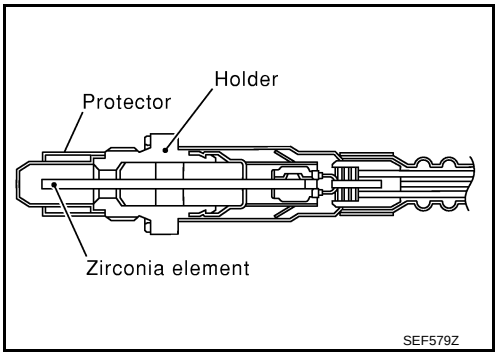

An electronic circuit controls the pump current through the oxygen-pump cell so that the composition of the exhaust gas in the diffusion gap remains constant at λ = 1. Therefore, the A/F sensor is able to indicate air/fuel ratio by this pumping of current. In addition, a heater is integrated in the sensor to ensure the required operating temperature of 700 - 800°C (1,292 - 1,472°F).

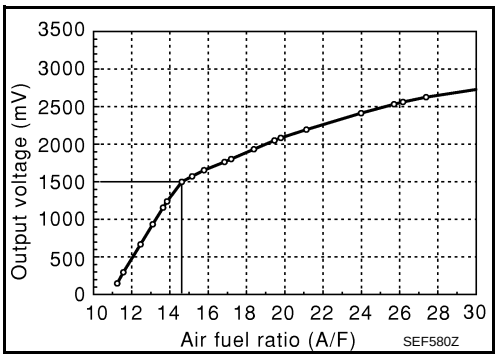

CONSULT-III Reference Value in Data Monitor Mode

INFOID:0000000001717324

Specification data are reference values.

MONITOR ITEM	CONDITION		SPECIFICATION
A/F SEN1 (B1) A/F SEN1 (B2)	• Engine: After warming up	Maintaining engine speed at 2,000 rpm	Fluctuates around 1.5V

On Board Diagnosis Logic

INFOID:0000000001717325

To judge the malfunction, the diagnosis checks that the A/F signal computed by ECM from the air fuel ratio (A/F) sensor 1 signal is not inordinately low.

DTC No.	Trouble diagnosis name	DTC detecting condition	Possible Cause
P0131 0131 (Bank 1)	Air fuel ratio (A/F) sensor 1 circuit low voltage	• The A/F signal computed by ECM from the A/F sensor 1 signal is constantly approx. 0V.	• Harness or connectors (The A/F sensor 1 circuit is open or shorted.) • Air fuel ratio (A/F) sensor 1
P0151 0151 (Bank 2)			

DTC Confirmation Procedure

INFOID:0000000001717326

NOTE:
If DTC Confirmation Procedure has been previously conducted, always perform the following before conducting the next step.
1. Turn ignition switch OFF and wait at least 10 seconds.
2. Turn ignition switch ON.
3. Turn ignition switch OFF and wait at least 10 seconds.

TESTING CONDITION:
Before performing the following procedure, confirm that battery voltage is more than 10.5V at idle.

WITH CONSULT-III

1. Start engine and warm it up to normal operating temperature.
2. Select “A/F SEN1 (B1)” or “A/F SEN1 (B2)” in “DATA MONITOR” mode with CONSULT-III.
3. Check “A/F SEN1 (B1)” or “A/F SEN1 (B2)” indication.
   If the indication is constantly approx. 0V, go to EC-221, "Diagnosis Procedure".
   If the indication is not constantly approx. 0V, go to next step.
4. Turn ignition switch OFF and wait at least 10 seconds.
5. Turn ignition switch ON.
6. Turn ignition switch OFF and wait at least 10 seconds.
7. Restart engine.
8. Drive and accelerate vehicle to more than 40 km/h (25 MPH) within 20 seconds after restarting engine.
9. Maintain the following conditions for about 20 consecutive seconds.

ENG SPEED	1,000 - 3,200 rpm
VHCL SPEED SE	More than 40 km/h (25 MPH)
B/FUEL SCHDL	1.5 - 9.0 msec
Gear position	Suitable position

NOTE:
- **Keep the accelerator pedal as steady as possible during the cruising.**
- **If this procedure is not completed within 1 minute after restarting engine at step 4, return to step 4.**

10. Check 1st trip DTC.
11. If 1st trip DTC is displayed, go to EC-221, "Diagnosis Procedure".

WITH GST

Follow the procedure “WITH CONSULT-III” above.

Wiring Diagram

INFOID:0000000001717327

BANK 1

EC-AF1B1-01

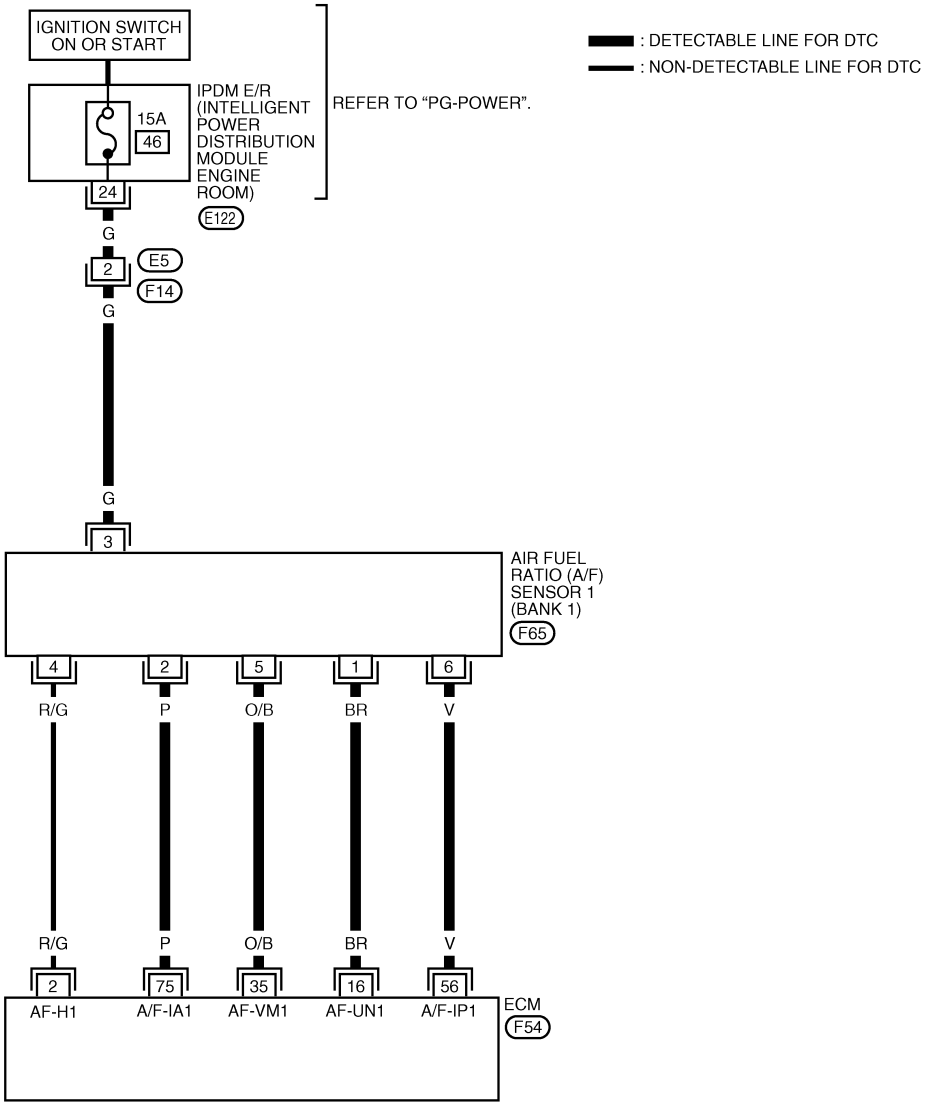

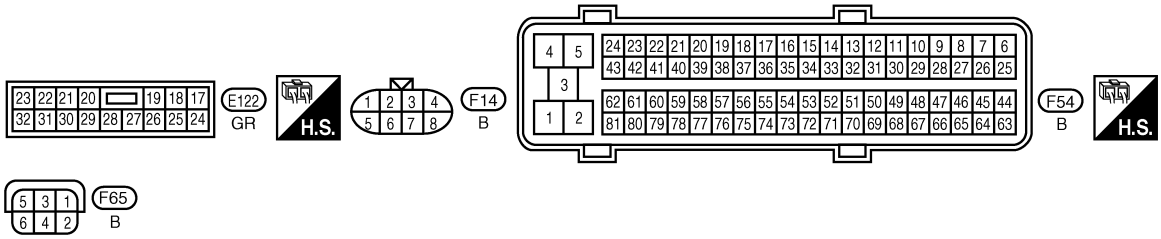

BBWA2503E

Specification data are reference values and are measured between each terminal and ground.
Pulse signal is measured by CONSULT-III.

CAUTION:

Do not use ECM ground terminals when measuring input/output voltage. Doing so may result in damage to the ECM's transistor. Use a ground other than ECM terminals, such as the ground.

TERMINAL NO.	WIRE COLOR	ITEM	CONDITION	DATA (DC Voltage)
2	R/G	A/F sensor 1 heater (Bank 1)	**[Engine is running]** • **Warm-up condition** • Idle speed	Approximately 5V★ 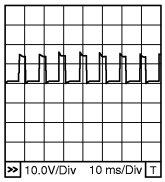 PBIB1584E
16	BR	A/F sensor 1 (Bank 1)	**[Engine is running]** • **Warm-up condition** • Idle speed	Approximately 3.1V
35	O/B			Approximately 2.6V
56	V			Approximately 2.3V
75	P			Approximately 2.3V

★: Average voltage for pulse signal (Actual pulse signal can be confirmed by oscilloscope.)

BANK 2

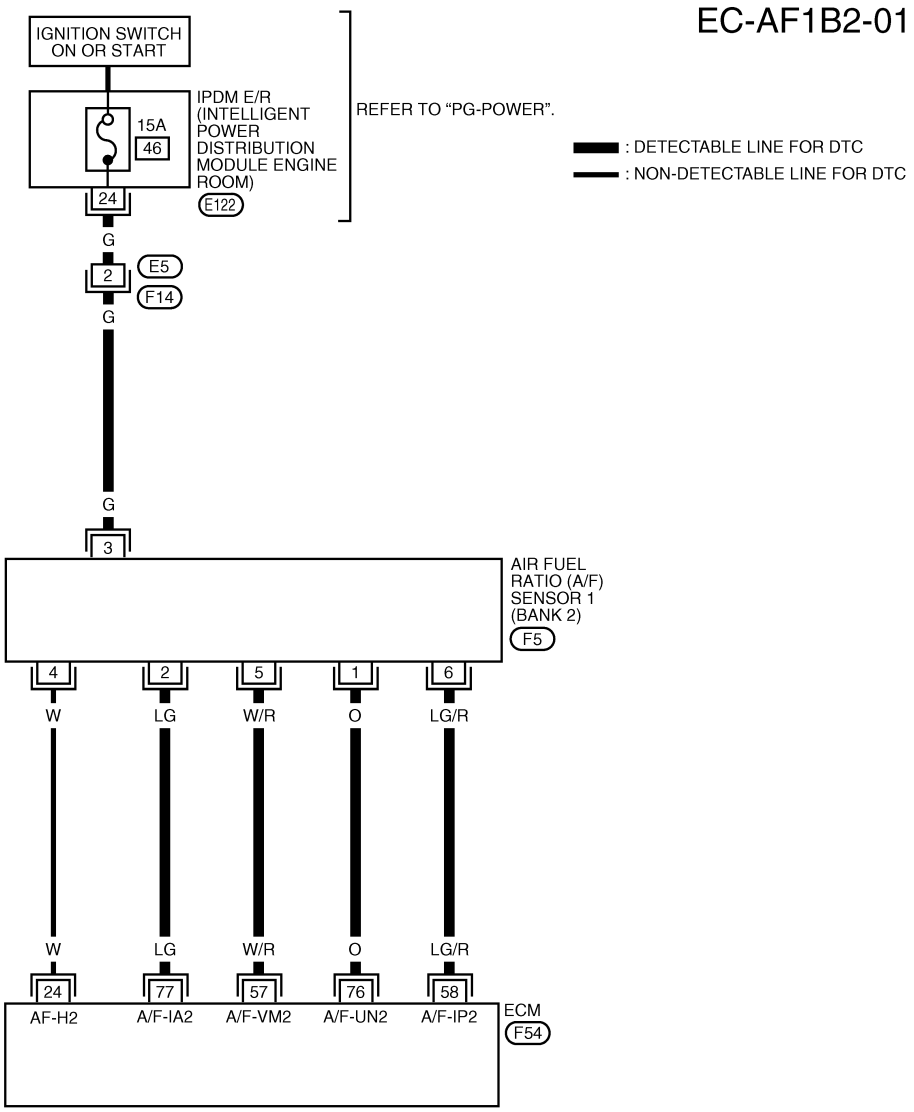

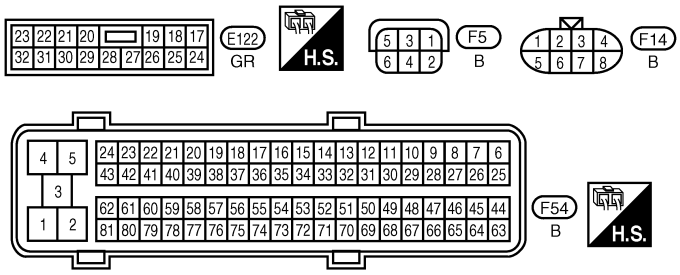

BBWA2504E

Specification data are reference values and are measured between each terminal and ground.
Pulse signal is measured by CONSULT-III.

CAUTION:

Do not use ECM ground terminals when measuring input/output voltage. Doing so may result in damage to the ECM's transistor. Use a ground other than ECM terminals, such as the ground.

TERMINAL NO.	WIRE COLOR	ITEM	CONDITION	DATA (DC Voltage)
24	W	A/F sensor 1 heater (Bank 2)	**[Engine is running]** • **Warm-up condition** • Idle speed	Approximately 5V★ 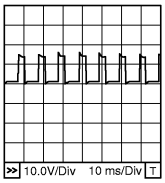 PBIB1584E
57	W/R	A/F sensor 1 (Bank 2)	**[Engine is running]** • **Warm-up condition** • Idle speed	Approximately 2.6V
58	LG/R			Approximately 2.3V
76	O			Approximately 3.1V
77	LG			Approximately 2.3V

★: Average voltage for pulse signal (Actual pulse signal can be confirmed by oscilloscope.)

Diagnosis Procedure

INFOID:0000000001717328

1. CHECK GROUND CONNECTIONS

1. Turn ignition switch OFF.
2. Loosen and retighten three ground screws on the body. Refer to EC-138, "Ground Inspection".

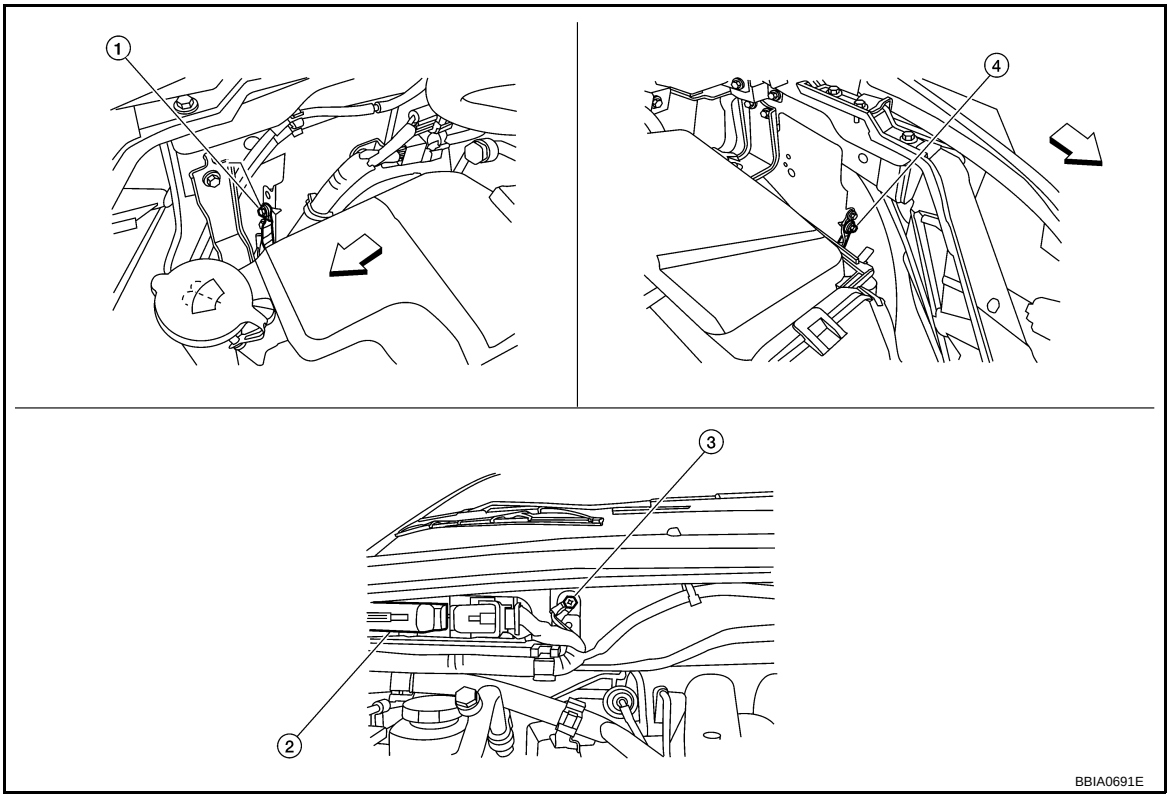

⇦: Vehicle front

1. Body ground E24
2. ECM
3. Body ground E9
4. Body ground E15

OK or NG

OK >> GO TO 2.
NG >> Repair or replace ground connections.

2. CHECK AIR FUEL RATIO (A/F) SENSOR 1 POWER SUPPLY CIRCUIT

1. Disconnect air fuel ratio (A/F) sensor 1 harness connector.

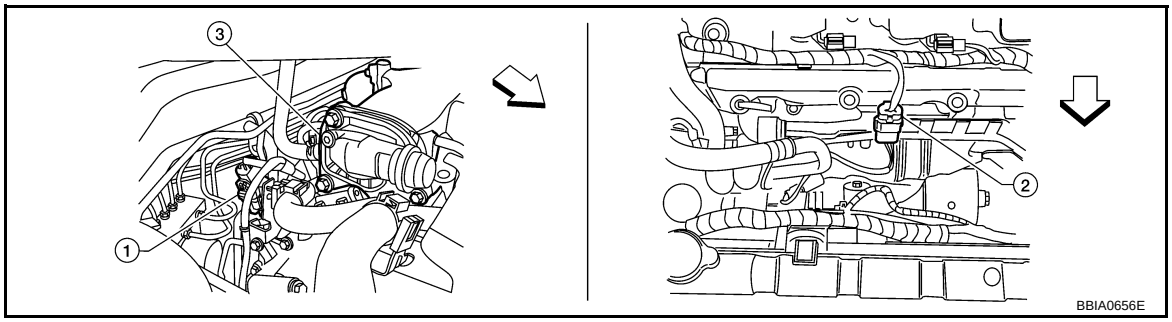

⇦: Vehicle front

1. Air fuel ratio (A/F) sensor 1 (bank 1) harness connector
2. Air fuel ratio (A/F) sensor 1 (bank 2) harness connector
3. Intake manifold collector

2. Turn ignition switch ON.
3. Check voltage between A/F sensor 1 terminal 3 and ground with CONSULT-III or tester.

Voltage: Battery voltage

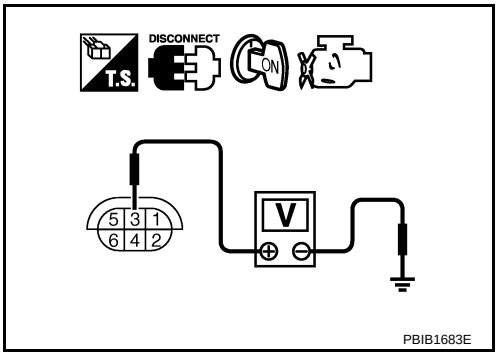

OK or NG

OK >> GO TO 4.
NG >> GO TO 3.

3. DETECT MALFUNCTIONING PART

Check the following.
- Harness connectors E5, F14
- IPDM E/R harness connector E122
- 15A fuse
- Harness for open or short between A/F sensor 1 and fuse

>> Repair or replace harness or connectors.

4. CHECK A/F SENSOR 1 INPUT SIGNAL CIRCUIT FOR OPEN AND SHORT

1. Turn ignition switch OFF.
2. Disconnect ECM harness connector.
3. Check harness continuity between the following terminals.
   Refer to Wiring Diagram.

	A/F sensor 1 terminal	ECM terminal
Bank1	1	16
	2	75
	5	35
	6	56
Bank 2	1	76
	2	77
	5	57
	6	58

Continuity should exist.

4. Check harness continuity between the following terminals and ground.
Refer to Wiring Diagram.

Bank 1		Bank 2	
A/F sensor 1 terminal	ECM terminal	A/F sensor 1 terminal	ECM terminal
1	16	1	76
2	75	2	77
5	35	5	57
6	56	6	58

Continuity should not exist.

5. Also check harness for short to power.

OK or NG

OK >> GO TO 5.
NG >> Repair open circuit or short to ground or short to power in harness or connectors.

5. CHECK INTERMITTENT INCIDENT

Perform EC-130.

OK or NG

OK >> GO TO 6.
NG >> Repair or replace.

6. REPLACE AIR FUEL RATIO (A/F) SENSOR 1

Replace malfunctioning air fuel ratio (A/F) sensor 1.

CAUTION:

- **Discard any air fuel ratio (A/F) sensor which has been dropped from a height of more than 0.5 m (19.7 in) onto a hard surface such as a concrete floor; use a new one.**
- **Before installing new air fuel ratio (A/F) sensor, clean exhaust system threads using Heated Oxygen Sensor Thread Cleaner tool J-43897-18 or J-43897-12 and approved anti-seize lubricant.**

>> **INSPECTION END**

Removal and Installation

INFOID:0000000001717329

AIR FUEL RATIO (A/F) SENSOR 1

Refer to EM-25.

DTC P0132, P0152 A/F SENSOR 1

Component Description

INFOID:0000000001717330

The A/F sensor is a planar dual-cell limit current sensor. The sensor element of the A/F sensor is the combination of a Nernst concentration cell (sensor cell) with an oxygen-pump cell, which transports ions. It has a heater in the element.

The sensor is capable of precise measurement λ = 1, but also in the lean and rich range. Together with its control electronics, the sensor outputs a clear, continuous signal throughout a wide λ range (0.7 < λ < air).

The exhaust gas components diffuse through the diffusion gap at the electrode of the oxygen pump and Nernst concentration cell, where they are brought to thermodynamic balance.

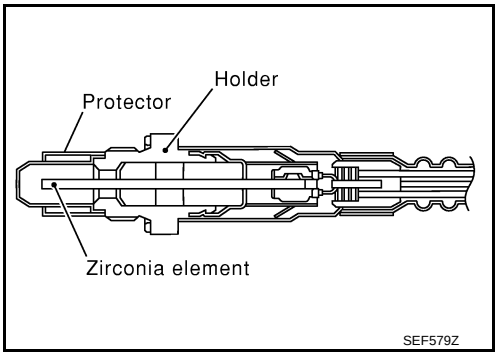

An electronic circuit controls the pump current through the oxygen-pump cell so that the composition of the exhaust gas in the diffusion gap remains constant at λ = 1. Therefore, the A/F sensor is able to indicate air/fuel ratio by this pumping of current. In addition, a heater is integrated in the sensor to ensure the required operating temperature of 700 - 800°C (1,292 - 1,472°F).

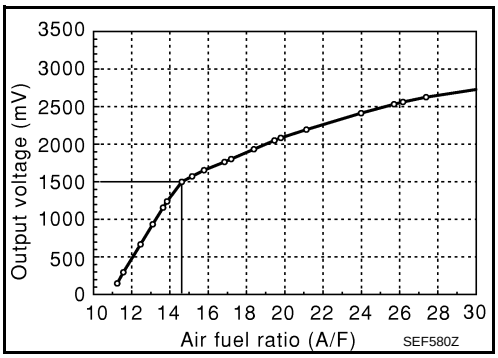

CONSULT-III Reference Value in Data Monitor Mode

INFOID:0000000001717331

Specification data are reference values.

MONITOR ITEM	CONDITION		SPECIFICATION
A/F SEN1 (B1) A/F SEN1 (B2)	• Engine: After warming up	Maintaining engine speed at 2,000 rpm	Fluctuates around 1.5V

On Board Diagnosis Logic

INFOID:0000000001717332

To judge the malfunction, the diagnosis checks that the A/F signal computed by ECM from the air fuel ratio (A/F) sensor 1 signal is not inordinately high.

DTC No.	Trouble diagnosis name	DTC detecting condition	Possible Cause
P0132 0132 (Bank 1)	Air fuel ratio (A/F) sensor 1 circuit high voltage	• The A/F signal computed by ECM from the A/F sensor 1 signal is constantly approx. 5V.	• Harness or connectors (The A/F sensor 1 circuit is open or shorted.) • Air fuel ratio (A/F) sensor 1
P0152 0152 (Bank 2)			

DTC Confirmation Procedure

INFOID:0000000001717333

NOTE:
If DTC Confirmation Procedure has been previously conducted, always perform the following before conducting the next step.
1. Turn ignition switch OFF and wait at least 10 seconds.
2. Turn ignition switch ON.
3. Turn ignition switch OFF and wait at least 10 seconds.

TESTING CONDITION:
Before performing the following procedure, confirm that battery voltage is more than 10.5V at idle.

WITH CONSULT-III

1. Start engine and warm it up to normal operating temperature.
2. Select “A/F SEN1 (B1)” or “A/F SEN1 (B2)” in “DATA MONITOR” mode with CONSULT-III.
3. Check “A/F SEN1 (B1)” or “A/F SEN1 (B2)” indication.
   If the indication is constantly approx. 5V, go to EC-229, "Diagnosis Procedure".
   If the indication is not constantly approx. 5V, go to next step.
4. Turn ignition switch OFF and wait at least 10 seconds.
5. Turn ignition switch ON.
6. Turn ignition switch OFF and wait at least 10 seconds.
7. Restart engine.
8. Drive and accelerate vehicle to more than 40 km/h (25 MPH) within 20 seconds after restarting engine.
9. Maintain the following conditions for about 20 consecutive seconds.

ENG SPEED	1,000 - 3,200 rpm
VHCL SPEED SE	More than 40 km/h (25 MPH)
B/FUEL SCHDL	1.5 - 9.0 msec
Gear position	Suitable position

NOTE:
- **Keep the accelerator pedal as steady as possible during the cruising.**
- **If this procedure is not completed within 1 minute after restarting engine at step 4, return to step 4.**

10. Check 1st trip DTC.
11. If 1st trip DTC is displayed, go to EC-229, "Diagnosis Procedure".

WITH GST

Follow the procedure “WITH CONSULT-III” above.

Wiring Diagram

INFOID:0000000001717334

BANK 1

EC-AF1B1-01

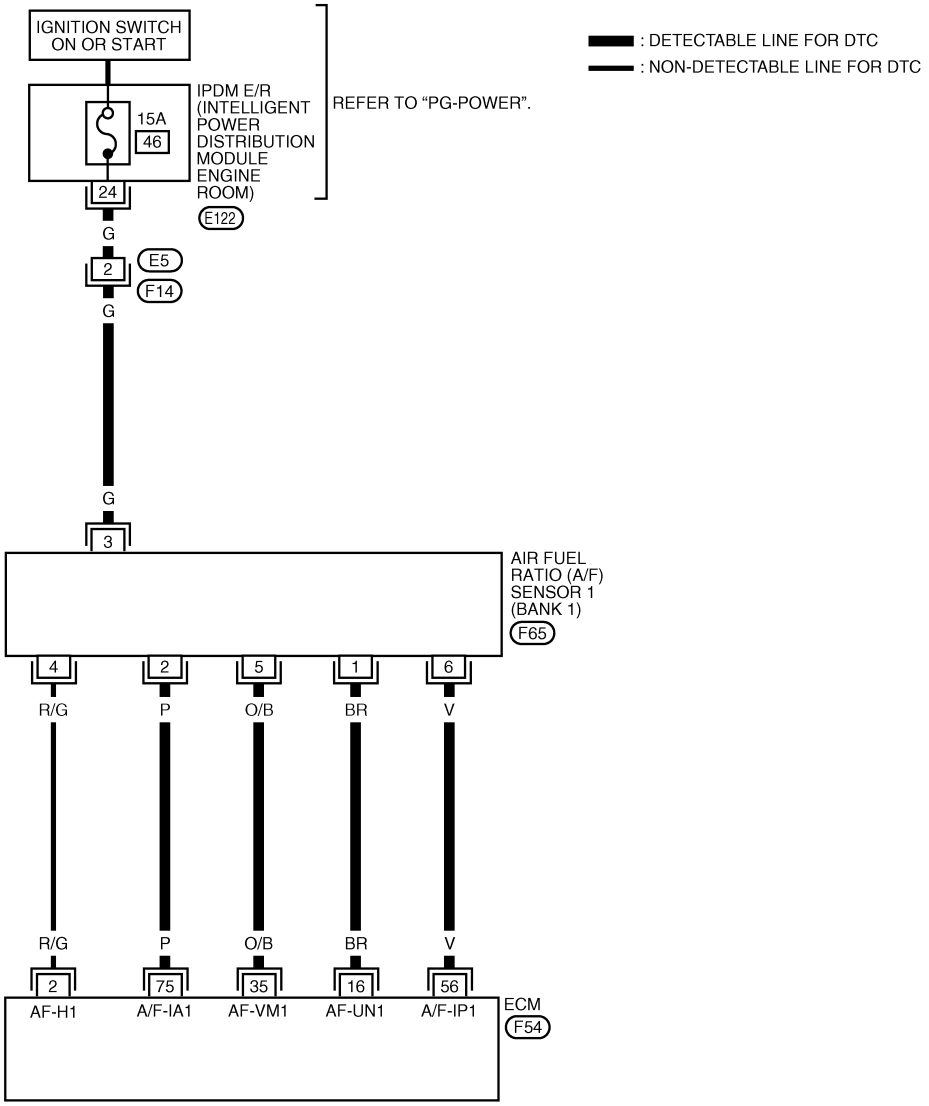

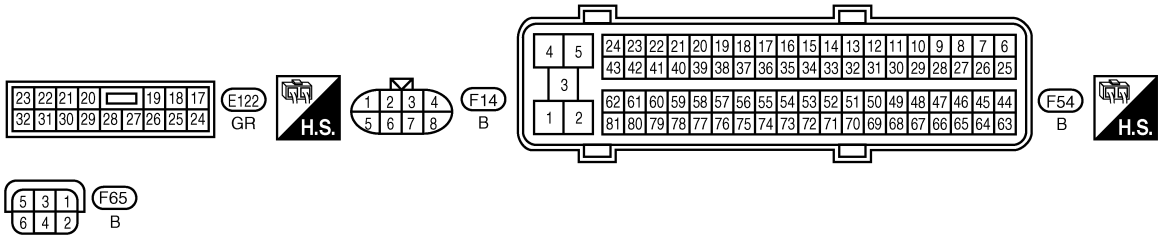

BBWA2503E

Specification data are reference values and are measured between each terminal and ground.
Pulse signal is measured by CONSULT-III.

CAUTION:

Do not use ECM ground terminals when measuring input/output voltage. Doing so may result in damage to the ECM's transistor. Use a ground other than ECM terminals, such as the ground.

TERMINAL NO.	WIRE COLOR	ITEM	CONDITION	DATA (DC Voltage)
2	R/G	A/F sensor 1 heater (Bank 1)	**[Engine is running]** • **Warm-up condition** • Idle speed	Approximately 5V★ 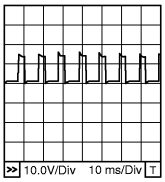 PBIB1584E
16	BR	A/F sensor 1 (Bank 1)	**[Engine is running]** • **Warm-up condition** • Idle speed	Approximately 3.1V
35	O/B			Approximately 2.6V
56	V			Approximately 2.3V
75	P			Approximately 2.3V

★: Average voltage for pulse signal (Actual pulse signal can be confirmed by oscilloscope.)

BANK 2

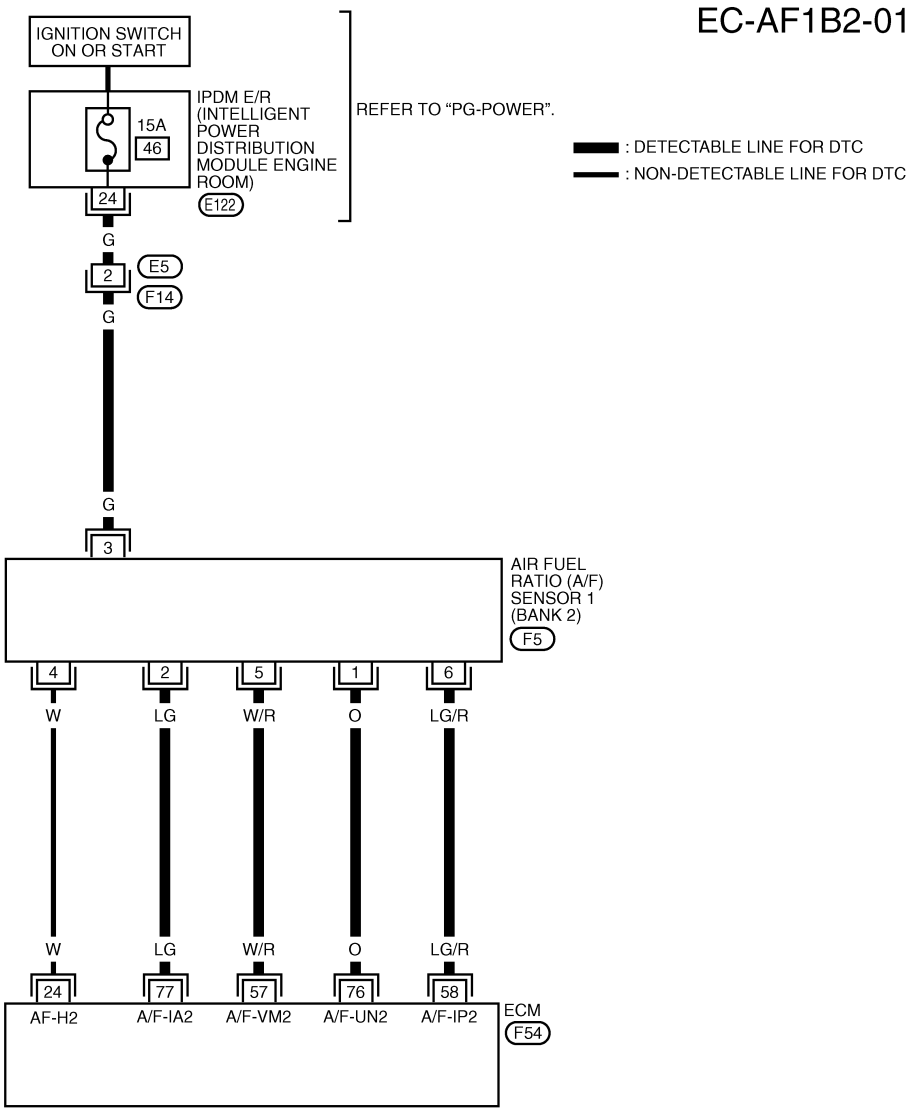

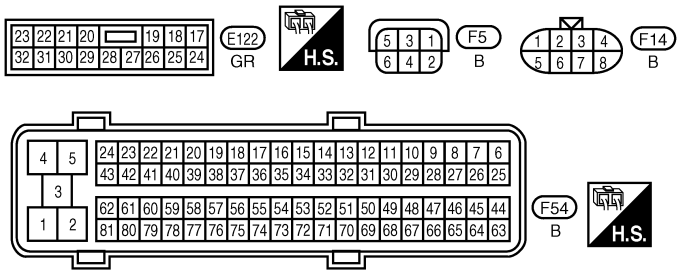

BBWA2504E

Specification data are reference values and are measured between each terminal and ground.
Pulse signal is measured by CONSULT-III.

CAUTION:

Do not use ECM ground terminals when measuring input/output voltage. Doing so may result in damage to the ECM's transistor. Use a ground other than ECM terminals, such as the ground.

TERMINAL NO.	WIRE COLOR	ITEM	CONDITION	DATA (DC Voltage)
24	W	A/F sensor 1 heater (Bank 2)	**[Engine is running]** • **Warm-up condition** • Idle speed	Approximately 5V★ 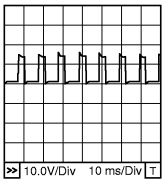 PBIB1584E
57	W/R	A/F sensor 1 (Bank 2)	**[Engine is running]** • **Warm-up condition** • Idle speed	Approximately 2.6V
58	LG/R			Approximately 2.3V
76	O			Approximately 3.1V
77	LG			Approximately 2.3V

★: Average voltage for pulse signal (Actual pulse signal can be confirmed by oscilloscope.)

Diagnosis Procedure

INFOID:0000000001717335

1. CHECK GROUND CONNECTIONS

1. Turn ignition switch OFF.
2. Loosen and retighten three ground screws on the body. Refer to EC-138, "Ground Inspection".

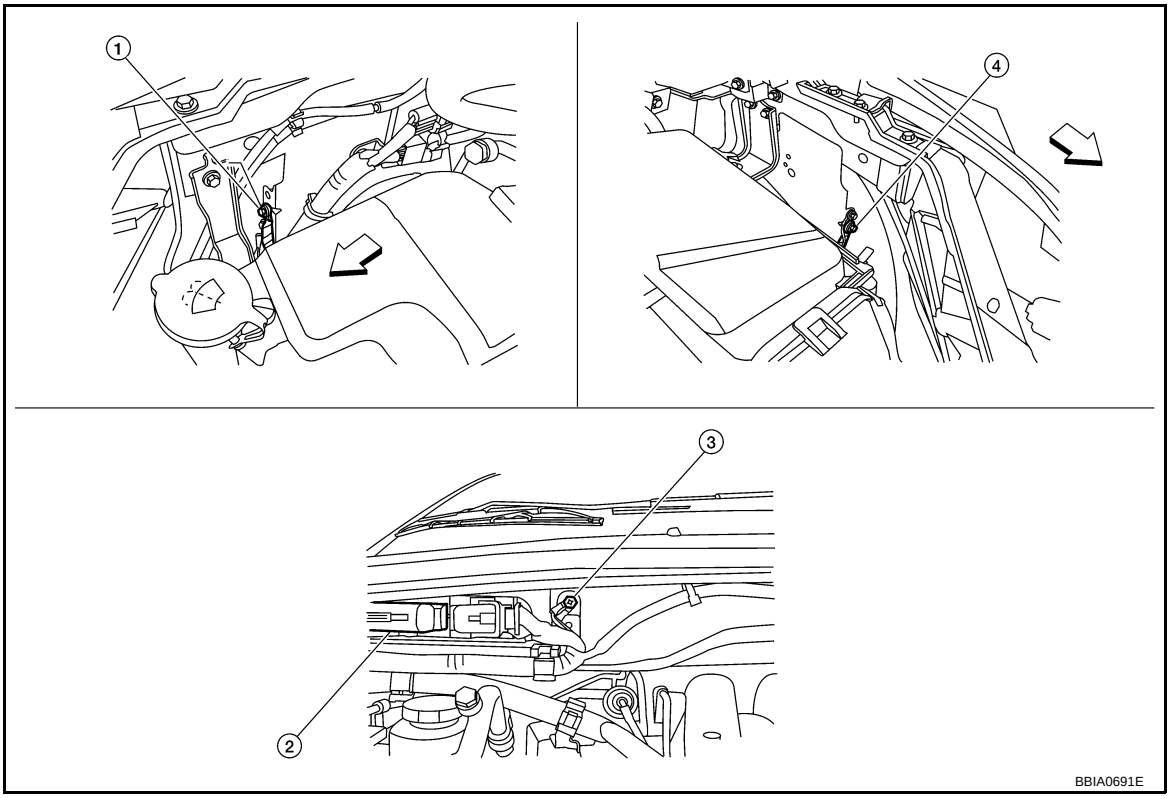

⇦: Vehicle front

1. Body ground E24
2. ECM
3. Body ground E9
4. Body ground E15

OK or NG

OK >> GO TO 2.
NG >> Repair or replace ground connections.

2. CHECK AIR FUEL RATIO (A/F) SENSOR 1 POWER SUPPLY CIRCUIT

1. Disconnect air fuel ratio (A/F) sensor 1 harness connector.

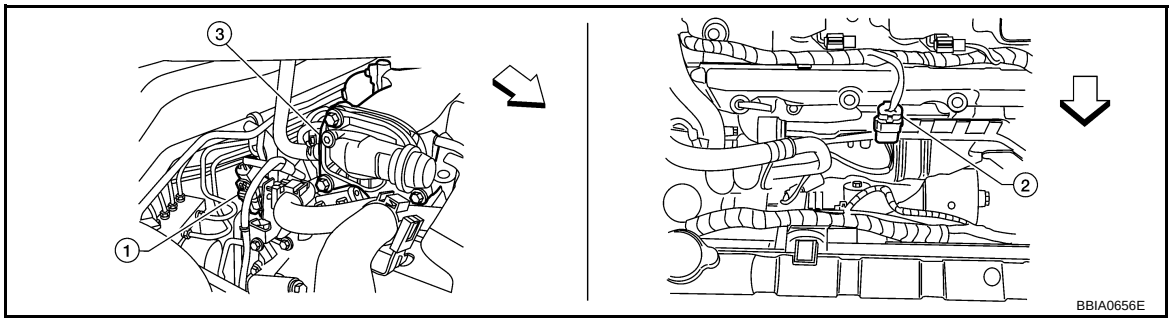

⇦: Vehicle front

1. Air fuel ratio (A/F) sensor 1 (bank 1) harness connector
2. Air fuel ratio (A/F) sensor 1 (bank 2) harness connector
3. Intake manifold collector

2. Turn ignition switch ON.
3. Check voltage between A/F sensor 1 terminal 3 and ground with CONSULT-III or tester.

Voltage: Battery voltage

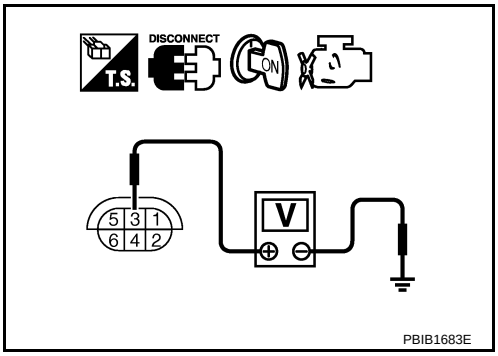

OK or NG

OK >> GO TO 4.
NG >> GO TO 3.

3. DETECT MALFUNCTIONING PART

Check the following.
- Harness connectors E5, F14
- IPDM E/R harness connector E122
- 15A fuse
- Harness for open or short between A/F sensor 1 and fuse

>> Repair or replace harness or connectors.

4. CHECK A/F SENSOR 1 INPUT SIGNAL CIRCUIT FOR OPEN AND SHORT

1. Turn ignition switch OFF.
2. Disconnect ECM harness connector.
3. Check harness continuity between the following terminals.
   Refer to Wiring Diagram.

	A/F sensor 1 terminal	ECM terminal
Bank1	1	16
	2	75
	5	35
	6	56
Bank 2	1	76
	2	77
	5	57
	6	58

Continuity should exist.

4. Check harness continuity between the following terminals and ground.
Refer to Wiring Diagram.

Bank 1		Bank 2	
A/F sensor 1 terminal	ECM terminal	A/F sensor 1 terminal	ECM terminal
1	16	1	76
2	75	2	77
5	35	5	57
6	56	6	58

Continuity should not exist.

5. Also check harness for short to power.

OK or NG

OK >> GO TO 5.
NG >> Repair open circuit or short to ground or short to power in harness or connectors.

5. CHECK INTERMITTENT INCIDENT

Perform EC-130.

OK or NG

OK >> GO TO 6.
NG >> Repair or replace.

6. REPLACE AIR FUEL RATIO (A/F) SENSOR 1

Replace malfunctioning air fuel ratio (A/F) sensor 1.

CAUTION:

- **Discard any air fuel ratio (A/F) sensor which has been dropped from a height of more than 0.5 m (19.7 in) onto a hard surface such as a concrete floor; use a new one.**
- **Before installing new air fuel ratio (A/F) sensor, clean exhaust system threads using Heated Oxygen Sensor Thread Cleaner tool J-43897-18 or J-43897-12 and approved anti-seize lubricant.**

>> **INSPECTION END**

Removal and Installation

INFOID:0000000001717336

AIR FUEL RATIO (A/F) SENSOR 1

Refer to EM-25.

DTC P0133, P0153 A/F SENSOR 1

Component Description

INFOID:0000000001717337

The A/F sensor is a planar dual-cell limit current sensor. The sensor element of the A/F sensor is the combination of a Nernst concentration cell (sensor cell) with an oxygen-pump cell, which transports ions. It has a heater in the element.

The sensor is capable of precise measurement λ = 1, but also in the lean and rich range. Together with its control electronics, the sensor outputs a clear, continuous signal throughout a wide λ range (0.7 < λ < air).

The exhaust gas components diffuse through the diffusion gap at the electrode of the oxygen pump and Nernst concentration cell, where they are brought to thermodynamic balance.

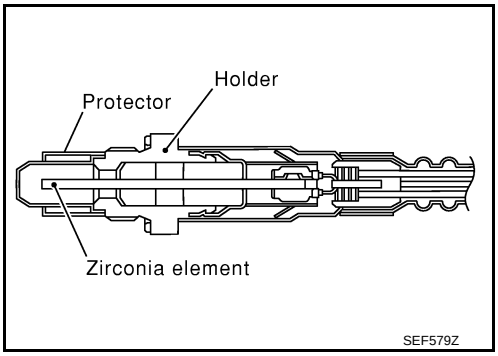

An electronic circuit controls the pump current through the oxygen-pump cell so that the composition of the exhaust gas in the diffusion gap remains constant at λ = 1. Therefore, the A/F sensor is able to indicate air/fuel ratio by this pumping of current. In addition, a heater is integrated in the sensor to ensure the required operating temperature of 700 - 800°C (1,292 - 1,472°F).

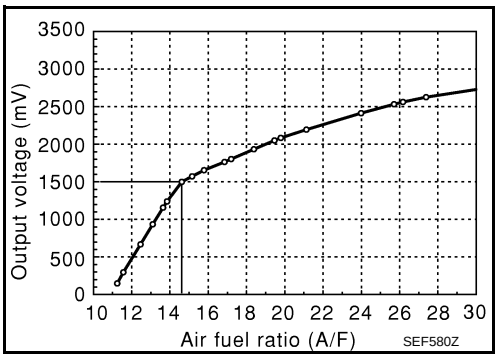

CONSULT-III Reference Value in Data Monitor Mode

INFOID:0000000001717338

Specification data are reference values.

MONITOR ITEM	CONDITION		SPECIFICATION
A/F SEN1 (B1) A/F SEN1 (B2)	• Engine: After warming up	Maintaining engine speed at 2,000 rpm	Fluctuates around 1.5V

On Board Diagnosis Logic

INFOID:0000000001717339

To judge the malfunction of air fuel ratio (A/F) sensor 1, this diagnosis measures response time of the A/F signal computed by ECM from the air fuel ration (A/F) sensor 1 signal. The time is compensated by engine operating (speed and load), fuel feedback control constant, and the air fuel ration (A/F) sensor 1 temperature index. Judgment is based on whether the compensated time (the A/F signal cycling time index) is inordinately long or not.

DTC No.	Trouble diagnosis name	DTC detecting condition	Possible Cause
P0133 0133 (Bank 1)	Air fuel ratio (A/F) sensor 1 circuit slow response	• The response of the A/F signal computed by ECM from A/F sensor 1 signal takes more than the specified time.	• Harness or connectors (The A/F sensor 1 circuit is open or shorted.) • Air fuel ratio (A/F) sensor 1 • Air fuel ratio (A/F) sensor 1 heater • Fuel pressure • Fuel injector • Intake air leaks • Exhaust gas leaks • PCV • Mass air flow sensor
P0153 0153 (Bank 2)			

DTC Confirmation Procedure

INFOID:0000000001717340

NOTE:

If DTC Confirmation Procedure has been previously conducted, always perform the following before conducting the next step.

1. Turn ignition switch OFF and wait at least 10 seconds.
2. Turn ignition switch ON.
3. Turn ignition switch OFF and wait at least 10 seconds.

TESTING CONDITION:
Before performing the following procedure, confirm that battery voltage is more than 11V at idle.

WITH CONSULT-III

1. Start engine and warm it up to normal operating temperature.
2. Turn ignition switch OFF and wait at least 10 seconds.
3. Turn ignition switch ON.
4. Turn ignition switch OFF and wait at least 10 seconds.
5. Start engine and keep the engine speed between 3,500 and 4,000 rpm for at least 1minute under no load.
6. Let engine idle for 1 minute.
7. Select “A/F SEN1(B1) P1278/P1279” (for DTC P0133) or “A/F SEN1(B2) P1288/P1289” (for DTC P0153) of “A/F SEN1” in “DTC WORK SUPPORT” mode with CONSULT-III.
8. Touch “START”.
   If “COMPLETED” appears on CONSULT-III screen, go to step 10.
   If “COMPLETED” does not appear on CONSULT-III screen, go to the following step.
9. After perform the following procedure, “TESTING” will be displayed on the CONSULT-III screen.

a. Increase the engine speed up to 4,000 to 5,000 rpm and keep it for 10 seconds.
b. Fully release accelerator pedal and then let engine idle for about 10 seconds.
   If “TESTING” is not displayed after 10 seconds, refer to EC-122.

10. Wait for about 20 seconds at idle at under the condition that “TESTING” is displayed on the CONSULT-III screen.
11. Make sure that “TESTING” changes to “COMPLETED”.
    If “TESTING” changed to “OUT OF CONDITION”, refer to EC-122.
12. Make sure that “OK” is displayed after touching “SELF-DIAG RESULT”.
    If “NG” is displayed, go to EC-237, "Diagnosis Procedure".

WITH GST

1. Start engine and warm it up to normal operating temperature.
2. Select Service $01 with GST.
3. Calculate the total value of “Short term fuel trim” and “Long term fuel trim” indications.
   Make sure that the total percentage should be within ±15%.
   If OK, go to the following step.
   If NG, check the following.
   - Intake air leaks
   - Exhaust gas leaks
   - Incorrect fuel pressure
   - Lack of fuel
   - Fuel injectors
   - Incorrect PCV hose connection
   - PCV valve
   - Mass air flow sensor
4. Turn ignition switch OFF and wait at least 10 seconds.
5. Turn ignition switch ON.
6. Turn ignition switch OFF and wait at least 10 seconds.
7. Start engine and keep the engine speed between 3,500 and 4,000 rpm for at least 1minute under no load.
8. Let engine idle for 1 minute.
9. Increase the engine speed up to 4,000 to 5,000 rpm and keep it for 10 seconds.
10. Fully release accelerator pedal and then let engine idle for about 1 minute.
11. Select Service $07 with GST.
    If 1st trip DTC is detected, go to EC-237, "Diagnosis Procedure".

Wiring Diagram

INFOID:0000000001717341

BANK 1

EC-AF1B1-01

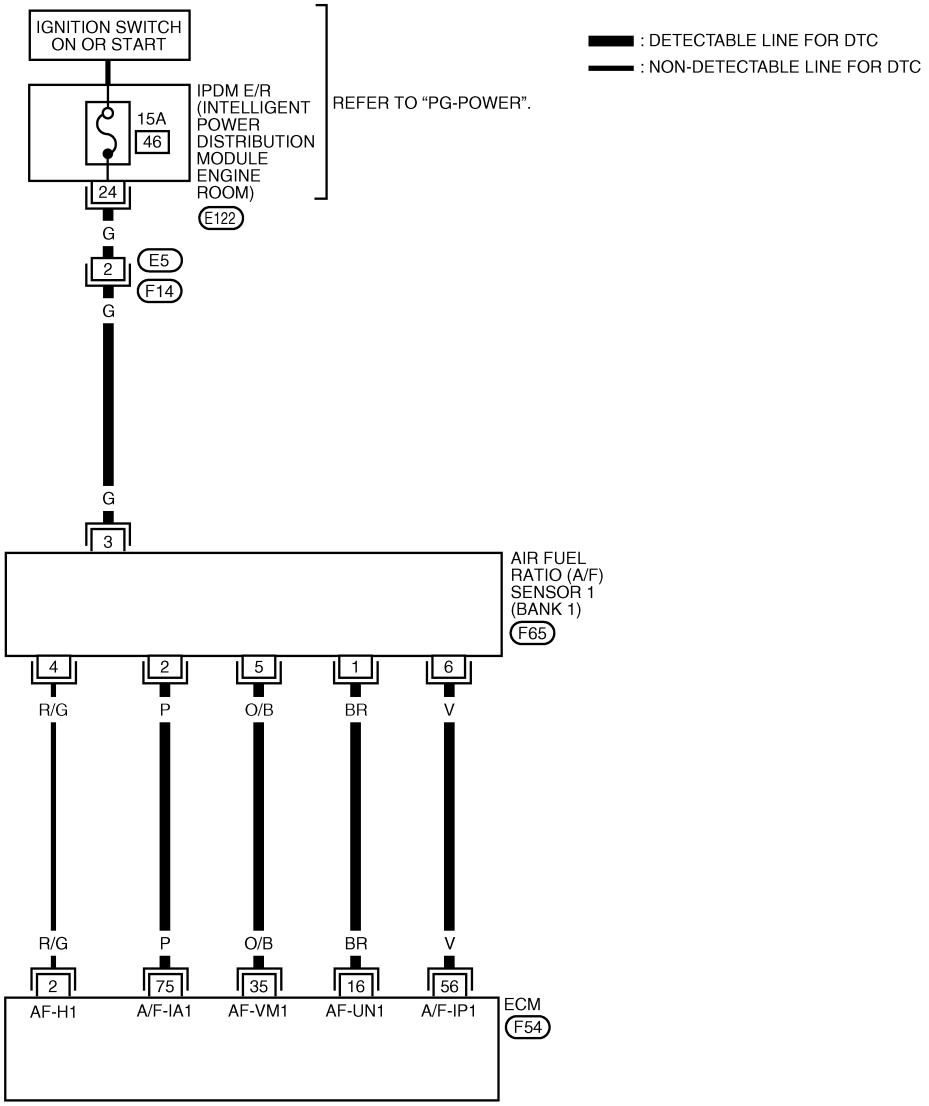

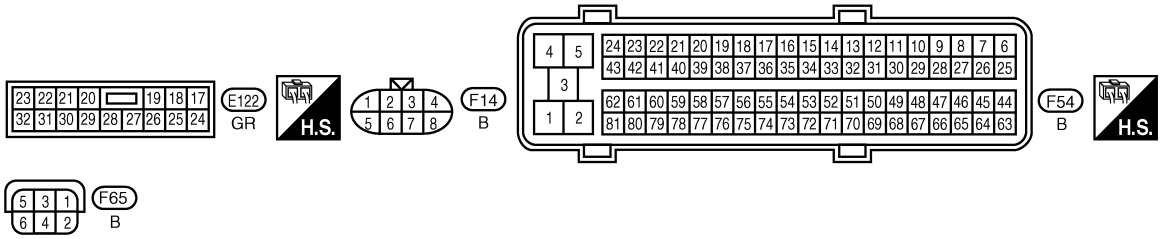

BBWA2503E

Specification data are reference values and are measured between each terminal and ground.
Pulse signal is measured by CONSULT-III.

CAUTION:

Do not use ECM ground terminals when measuring input/output voltage. Doing so may result in damage to the ECM's transistor. Use a ground other than ECM terminals, such as the ground.

TERMINAL NO.	WIRE COLOR	ITEM	CONDITION	DATA (DC Voltage)
2	R/G	A/F sensor 1 heater (Bank 1)	**[Engine is running]** • **Warm-up condition** • Idle speed	Approximately 5V★ 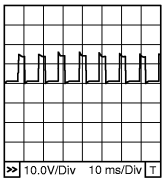 PBIB1584E
16	BR	A/F sensor 1 (Bank 1)	**[Engine is running]** • **Warm-up condition** • Idle speed	Approximately 3.1V
35	O/B			Approximately 2.6V
56	V			Approximately 2.3V
75	P			Approximately 2.3V

★: Average voltage for pulse signal (Actual pulse signal can be confirmed by oscilloscope.)

BANK 2

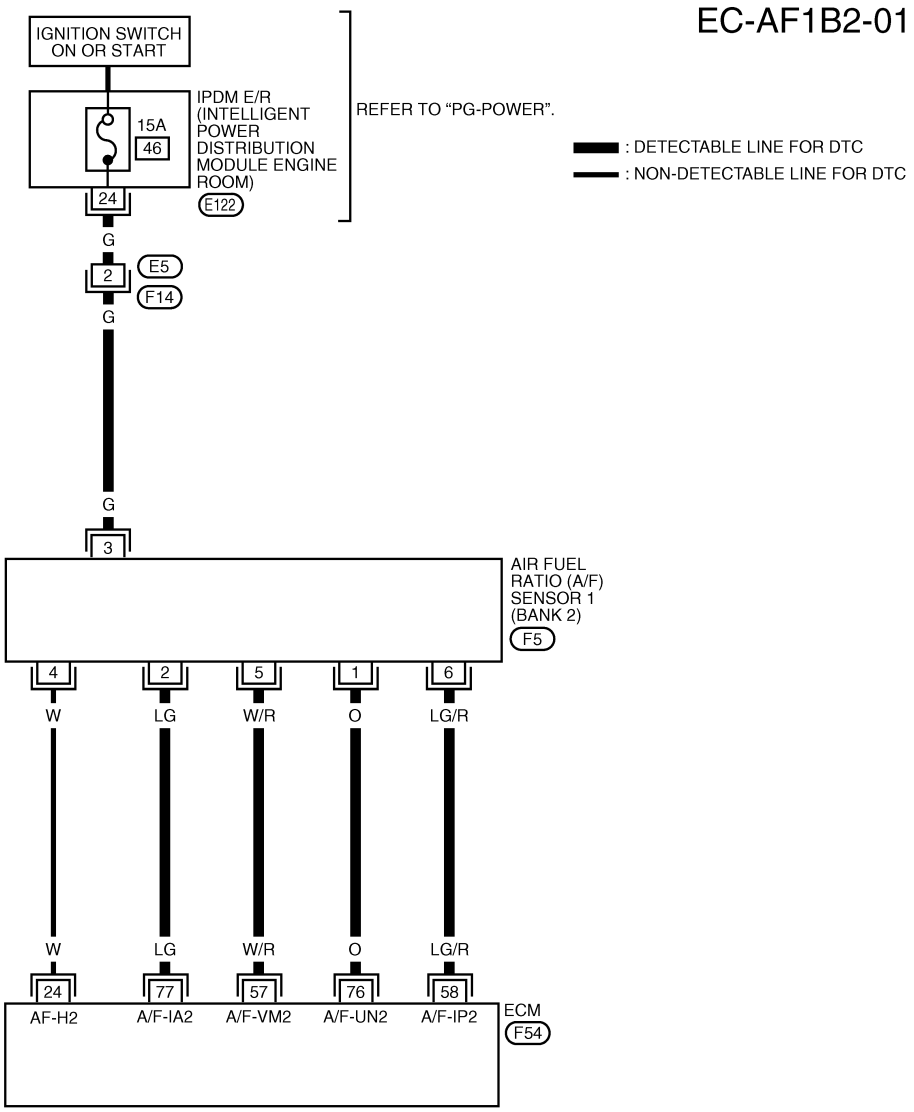

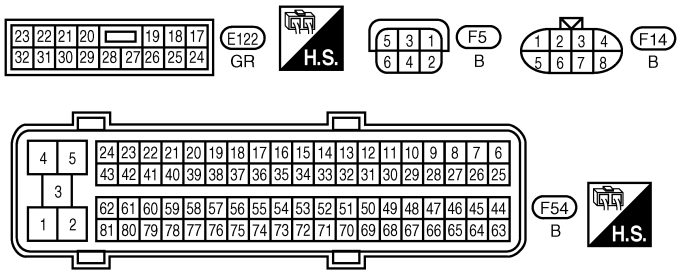

BBWA2504E

Specification data are reference values and are measured between each terminal and ground.
Pulse signal is measured by CONSULT-III.

CAUTION:

Do not use ECM ground terminals when measuring input/output voltage. Doing so may result in damage to the ECM's transistor. Use a ground other than ECM terminals, such as the ground.

TERMINAL NO.	WIRE COLOR	ITEM	CONDITION	DATA (DC Voltage)
24	W	A/F sensor 1 heater (Bank 2)	**[Engine is running]** • **Warm-up condition** • Idle speed	Approximately 5V★ 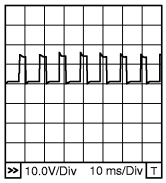 PBIB1584E
57	W/R	A/F sensor 1 (Bank 2)	**[Engine is running]** • **Warm-up condition** • Idle speed	Approximately 2.6V
58	LG/R			Approximately 2.3V
76	O			Approximately 3.1V
77	LG			Approximately 2.3V

★: Average voltage for pulse signal (Actual pulse signal can be confirmed by oscilloscope.)

Diagnosis Procedure

INFOID:0000000001717342

1. CHECK GROUND CONNECTIONS

1. Turn ignition switch OFF.
2. Loosen and retighten three ground screws on the body. Refer to EC-138, "Ground Inspection".

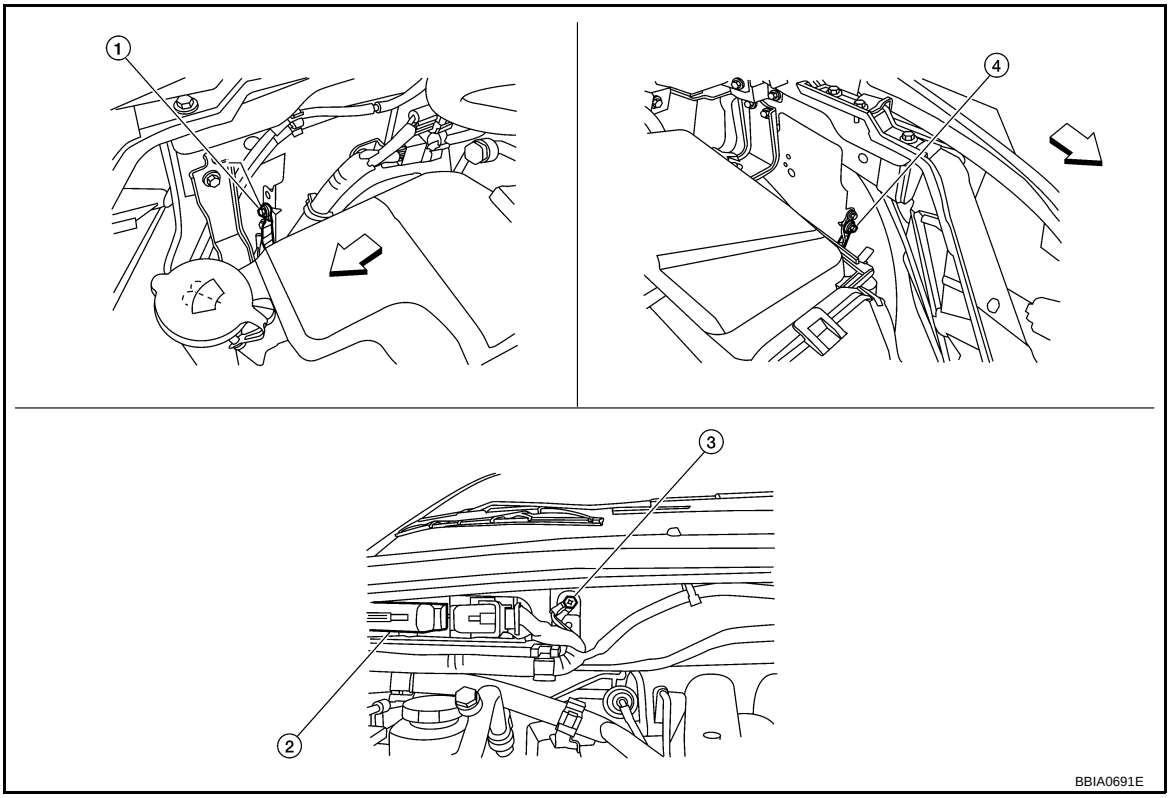

⇦: Vehicle front

1. Body ground E24
2. ECM
3. Body ground E9
4. Body ground E15

OK or NG

OK >> GO TO 2.
NG >> Repair or replace ground connections.

2. RETIGHTEN AIR FUEL RATIO (A/F) SENSOR 1

Loosen and retighten the air fuel ratio (A/F) sensor 1.
Refer to EM-25, "Removal and Installation".

>> GO TO 3.

3. CHECK EXHAUST GAS LEAK

1. Start engine and run it at idle.
2. Listen for an exhaust gas leak before three way catalyst (manifold).

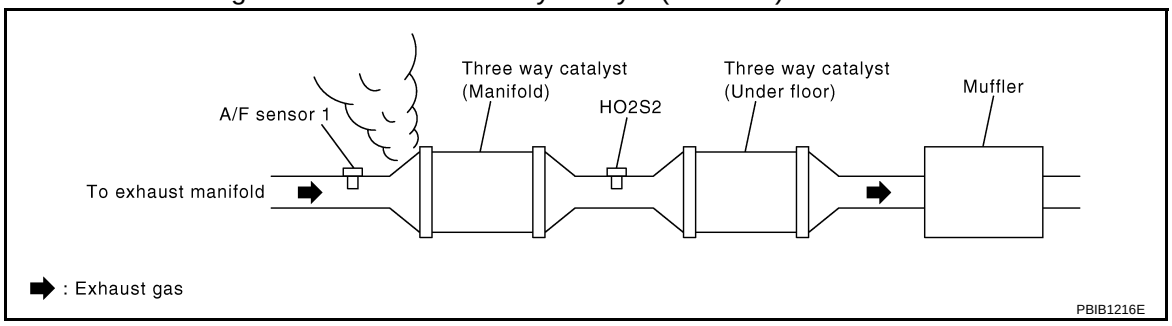

OK or NG

OK >> GO TO 4.
NG >> Repair or replace.

4. CHECK FOR INTAKE AIR LEAK

Listen for an intake air leak after the mass air flow sensor.

OK or NG

OK >> GO TO 5.
NG >> Repair or replace.

5. CLEAR THE SELF-LEARNING DATA

With CONSULT-III

1. Start engine and warm it up to normal operating temperature.
2. Select “SELF-LEARNING CONT” in “WORK SUPPORT” mode with CONSULT-III.
3. Clear the self-learning control coefficient by touching “CLEAR” or “START”.
4. Run engine for at least 10 minutes at idle speed.
   Is the 1st trip DTC P0171, P172, P0174 or P0175 detected? Is it difficult to start engine?

Without CONSULT-III

1. Start engine and warm it up to normal operating temperature.
2. Turn ignition switch OFF.
3. Disconnect mass air flow sensor harness connector.
4. Restart engine and let it idle for at least 5 seconds.
5. Stop engine and reconnect mass air flow sensor harness connector.
6. Make sure DTC P0102 is displayed.
7. Erase the DTC memory. Refer to EC-43, "Emission-related Diagnostic Information".
8. Make sure DTC P0000 is displayed.
9. Run engine for at least 10 minutes at idle speed.
   Is the 1st trip DTC P0171, P0172, P0174 or P0175 detected? Is it difficult to start engine?

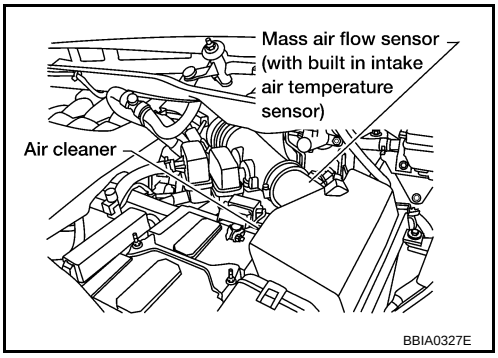

Yes or No

Yes >> Perform trouble diagnosis for DTC P0171, P0174 or P0172, P0175. Refer to EC-271or EC-281.
No >> GO TO 6.

6. CHECK AIR FUEL RATIO (A/F) SENSOR 1 POWER SUPPLY CIRCUIT

1. Turn ignition switch OFF.
2. Disconnect air fuel ratio (A/F) sensor 1 harness connector.

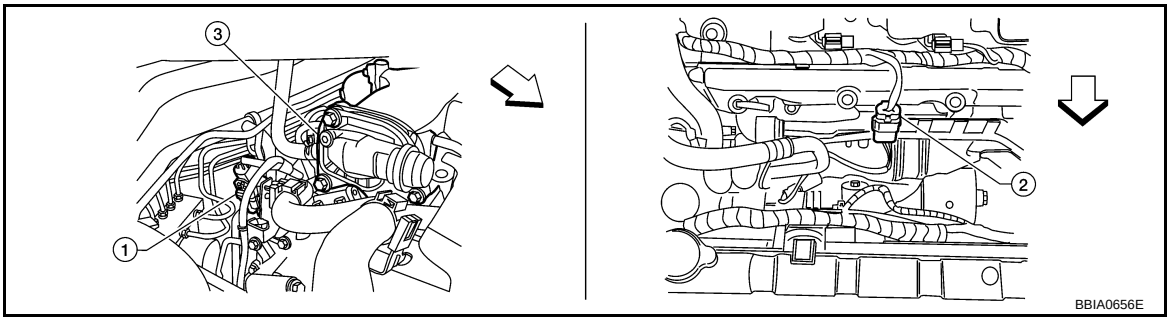

⇦: Vehicle front

1. Air fuel ratio (A/F) sensor 1 (bank 1) harness connector
2. Air fuel ratio (A/F) sensor 1 (bank 2) harness connector
3. Intake manifold collector

3. Turn ignition switch ON.
4. Check voltage between A/F sensor 1 terminal 3 and ground with CONSULT-III or tester.

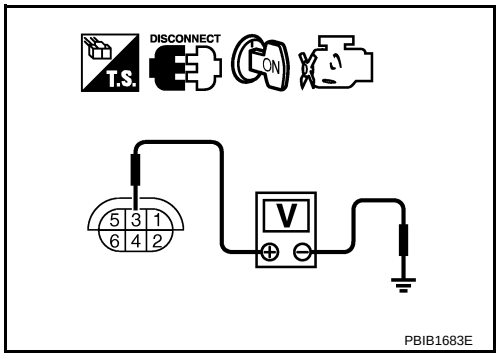

Voltage: Battery voltage

OK or NG

OK >> GO TO 8.
NG >> GO TO 7.

7. DETECT MALFUNCTIONING PART

Check the following.
- Harness connectors E5, F14
- IPDM E/R harness connector E122
- 15A fuse
- Harness for open or short between A/F sensor 1 and fuse

>> Repair or replace harness or connectors.

8. CHECK A/F SENSOR 1 INPUT SIGNAL CIRCUIT FOR OPEN AND SHORT

1. Turn ignition switch OFF.
2. Disconnect ECM harness connector.
3. Check harness continuity between the following terminals. Refer to Wiring Diagram.

	A/F sensor 1 terminal	ECM terminal
Bank1	1	16
	2	75
	5	35
	6	56
Bank 2	1	76
	2	77
	5	57
	6	58

Continuity should exist.

4. Check harness continuity between the following terminals and ground.

Refer to Wiring Diagram.

Bank 1		Bank 2	
A/F sensor 1 terminal	ECM terminal	A/F sensor 1 terminal	ECM terminal
1	16	1	76
2	75	2	77
5	35	5	57
6	56	6	58

Continuity should not exist.

5. Also check harness for short to power.

OK or NG

OK >> GO TO 9.
NG >> Repair open circuit or short to ground or short to power in harness or connectors.

9. CHECK AIR FUEL RATIO (A/F) SENSOR 1 HEATER

Refer to EC-152, "Component Inspection".

OK or NG

OK >> GO TO 10.
NG >> GO TO 13.

10. CHECK MASS AIR FLOW SENSOR

Refer to EC-175, "Component Inspection".

OK or NG

OK >> GO TO 11.
NG >> Replace mass air flow sensor.

11. CHECK PCV VALVE

Refer to EC-39.

OK or NG

OK >> GO TO 12.
NG >> Repair or replace PCV valve.

12. CHECK INTERMITTENT INCIDENT

Perform EC-130.

OK or NG

OK >> GO TO 13.
NG >> Repair or replace.

13. REPLACE AIR FUEL RATIO (A/F) SENSOR 1

Replace malfunctioning air fuel ratio (A/F) sensor 1.

CAUTION:

- **Discard any air fuel ratio (A/F) sensor which has been dropped from a height of more than 0.5 m (19.7 in) onto a hard surface such as a concrete floor; use a new one.**
- **Before installing new air fuel ratio (A/F) sensor, clean exhaust system threads using Heated Oxygen Sensor Thread Cleaner tool J-43897-18 or J-43897-12 and approved anti-seize lubricant.**

>> **INSPECTION END**

Removal and Installation

INFOID:0000000001717343

AIR FUEL RATIO (A/F) SENSOR 1

Refer to EM-25.

DTC P0137, P0157 HO2S2

Component Description

INFOID:0000000001717344

The heated oxygen sensor 2, after three way catalyst (manifold), monitors the oxygen level in the exhaust gas on each bank.
Even if switching characteristics of the A/F sensor 1 are shifted, the air-fuel ratio is controlled to stoichiometric, by the signal from the heated oxygen sensor 2.
This sensor is made of ceramic zirconia. The zirconia generates voltage from approximately 1V in richer conditions to 0V in leaner conditions.
Under normal conditions the heated oxygen sensor 2 is not used for engine control operation.

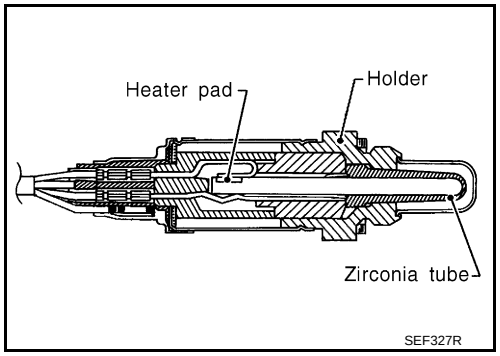

CONSULT-III Reference Value in Data Monitor Mode

INFOID:0000000001717345

Specification data are reference values.

MONITOR ITEM	CONDITION	SPECIFICATION
HO2S2 (B1) HO2S2 (B2)	• Revving engine from idle to 3,000 rpm quickly after the following conditions are met - Engine: After warming up - Keeping the engine speed between 3,500 and 4,000 rpm for 1 minute and at idle for 1 minute under no load	0 - 0.3V ←→ Approx. 0.6 - 1.0V
HO2S2 MNTR (B1) HO2S2 MNTR (B2)		LEAN ←→ RICH

On Board Diagnosis Logic

INFOID:0000000001717346

The heated oxygen sensor 2 has a much longer switching time between rich and lean than the heated oxygen sensor 1. The oxygen storage capacity of the three way catalyst (manifold) causes the longer switching time. To judge the malfunctions of heated oxygen sensor 2, ECM monitors whether the maximum voltage of the sensor is sufficiently high during the various driving condition such as fuel-cut.

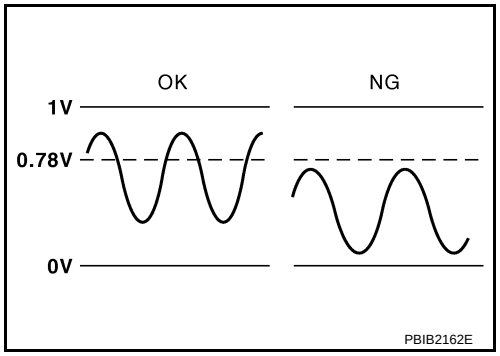

DTC No.	Trouble diagnosis name	DTC detecting condition	Possible cause
P0137 0137 (Bank 1)	Heated oxygen sensor 2 circuit low voltage	The maximum voltage from the sensor is not reached to the specified voltage.	• Harness or connectors (The sensor circuit is open or shorted) • Heated oxygen sensor 2 • Fuel pressure • Fuel injector • Intake air leaks
P0157 0157 (Bank 2)			

DTC Confirmation Procedure

INFOID:0000000001717347

NOTE:
If DTC Confirmation Procedure has been previously conducted, always perform the following before conducting the next step.
1. Turn ignition switch OFF and wait at least 10 seconds.
2. Turn ignition switch ON.
3. Turn ignition switch OFF and wait at least 10 seconds.

WITH CONSULT-III

TESTING CONDITION:
For better results, perform “DTC WORK SUPPORT” at a temperature of 0 to 30 °C (32 to 86 °F).

1. Turn ignition switch ON and select “DATA MONITOR” mode with CONSULT-III.
2. Start engine and warm it up to the normal operating temperature.
3. Turn ignition switch OFF and wait at least 10 seconds.
4. Turn ignition switch ON.
5. Turn ignition switch OFF and wait at least 10 seconds.
6. Start engine and keep the engine speed between 3,500 and 4,000 rpm for at least 1 minute under no load.
7. Let engine idle for 1 minute.
8. Make sure that “COOLAN TEMP/S” indicates more than 70°C (158°F).
   If not, warm up engine and go to next step when “COOLAN TEMP/S” indication reaches to 70°C (158°F).
9. Open engine hood.
10. Select “HO2S2 (B1) P1147” (for DTC P0137) or “HO2S2 (B2) P1167” (for DTC P0157) of “HO2S2” in “DTC WORK SUPPORT” mode with CONSULT-III.
11. Start engine and following the instruction of CONSULT-III.
    NOTE:
    It will take at most 10 minutes until “COMPLETED” is displayed.
12. Make sure that “OK” is displayed after touching “SELF-DIAG RESULTS”.
    If “NG” is displayed, refer to EC-246, "Diagnosis Procedure".
    If “CAN NOT BE DIAGNOSED” is displayed, perform the following.

a. Turn ignition switch OFF and leave the vehicle in a cool place (soak the vehicle).
b. Return to step 1.

Overall Function Check

INFOID:0000000001717348

Use this procedure to check the overall function of the heated oxygen sensor 2 circuit. During this check, a 1st trip DTC might not be confirmed.

WITH GST

1. Start engine and warm it up to the normal operating temperature.
2. Turn ignition switch OFF and wait at least 10 seconds.
3. Turn ignition switch ON.
4. Turn ignition switch OFF and wait at least 10 seconds.
5. Start engine and keep the engine speed between 3,500 and 4,000 rpm for at least 1 minute under no load.
6. Let engine idle for 1 minute.
7. Set voltmeter probes between ECM terminal 74 [HO2S2 (B1) signal] or 55 [HO2S2 (B2) signal] and ground.
8. Check the voltage when revving up to 4,000 rpm under no load at least 10 times.
   (Depress and release accelerator pedal as soon as possible.)
   The voltage should be above 0.78V at least once during this procedure.
   If the voltage can be confirmed in step 6, step 7 is not necessary.
9. Keep vehicle at idling for 10 minutes, then check the voltage.
   Or check the voltage when coasting from 80 km/h (50 MPH) in D position with “OD” OFF.
   The voltage should be above 0.78V at least once during this procedure.

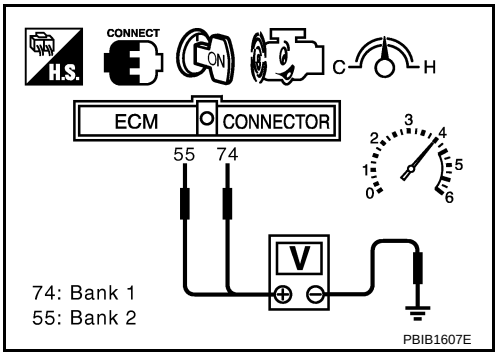

10. If NG, go to EC-246, "Diagnosis Procedure".

Wiring Diagram

INFOID:0000000001717349

BANK 1

EC-O2S2B1-01

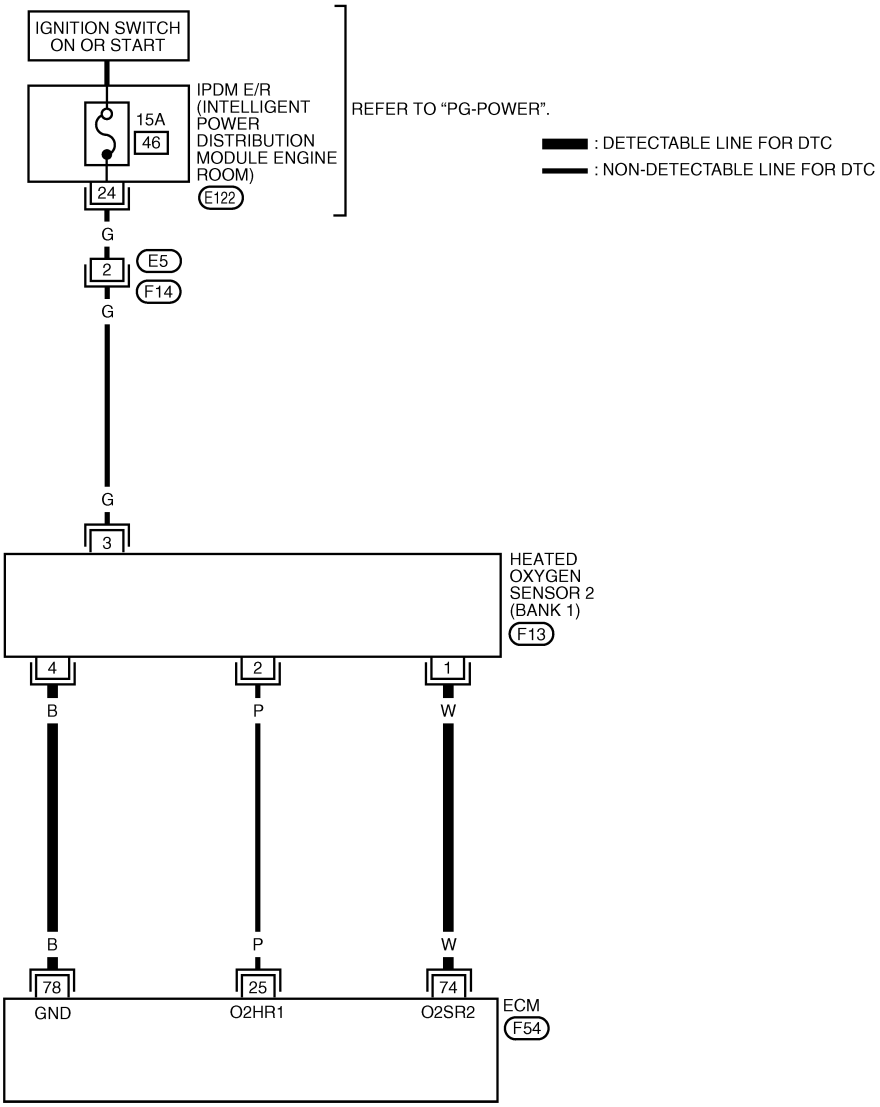

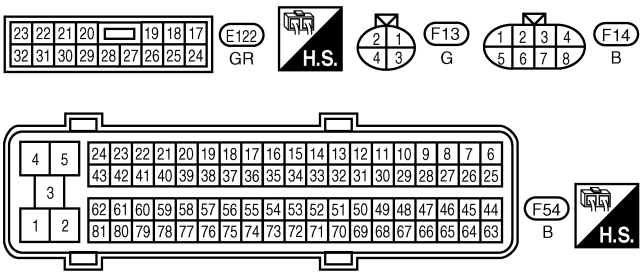

BBWA2509E

Specification data are reference values and are measured between each terminal and ground.

CAUTION:

Do not use ECM ground terminals when measuring input/output voltage. Doing so may result in damage to the ECM's transistor. Use a ground other than ECM terminals, such as the ground.

TER-MI-NAL NO.	WIRE COLOR	ITEM	CONDITION	DATA (DC Voltage)
25	P	Heated oxygen sensor 2 heater (Bank 1)	**[Engine is running]** • Engine speed: Below 3,600 rpm after the following conditions are met - Engine: After warming up - Keeping the engine speed between 3,500 and 4,000 rpm for 1 minute and at idle for 1 minute under no load.	0 - 1.0V
			[Ignition switch: ON] • Engine stopped **[Engine is running]** • Engine speed: Above 3,600 rpm	BATTERY VOLTAGE (11 - 14V)
74	W	Heated oxygen sensor 2 (Bank 1)	**[Engine is running]** • Revving engine from idle to 3,000 rpm quickly after the following conditions are met - Engine: After warming up - Keeping the engine speed between 3,500 and 4,000 rpm for 1 minute and at idle for 1 minute under no load	0 - Approximately 1.0V
78	B	Heated oxygen sensor 2 ground	**[Engine is running]** • **Warm-up condition** • Idle speed	Approximately 0V

EC-O2S2B2-01

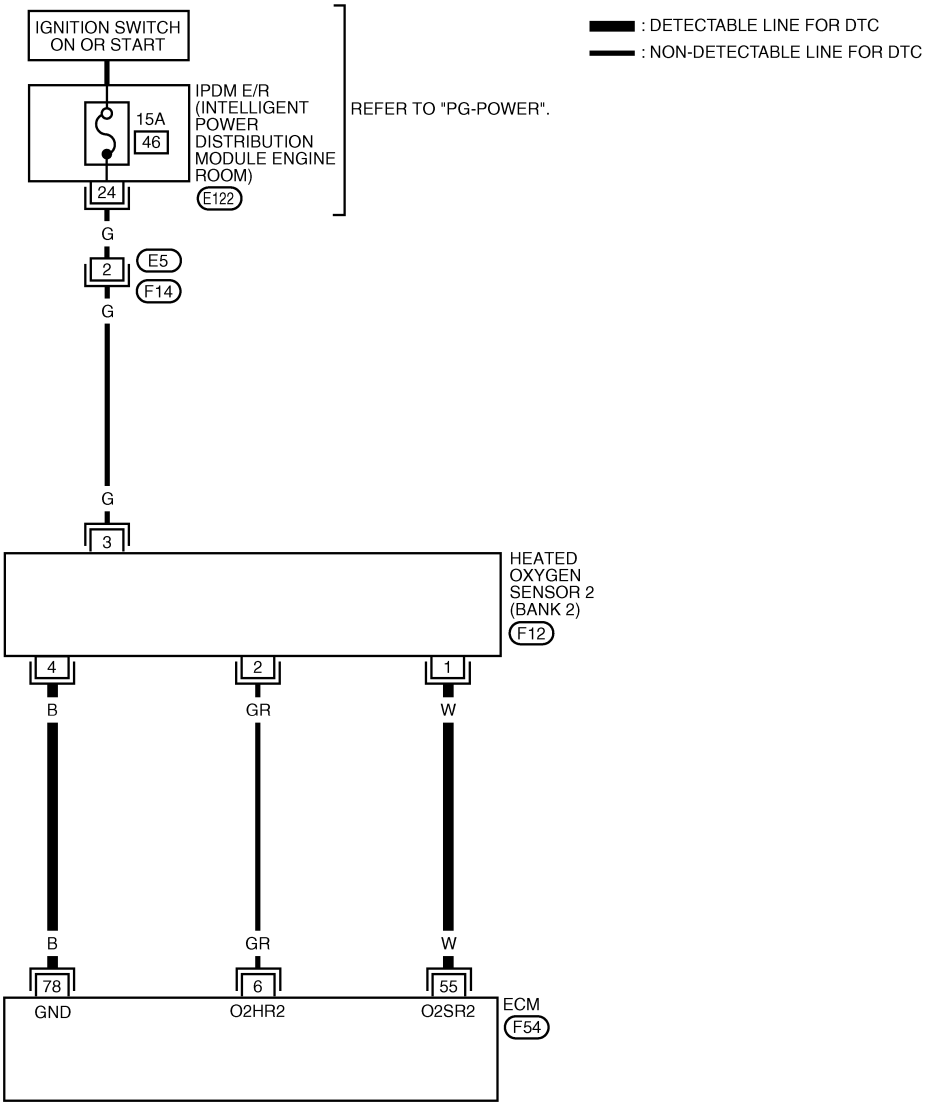

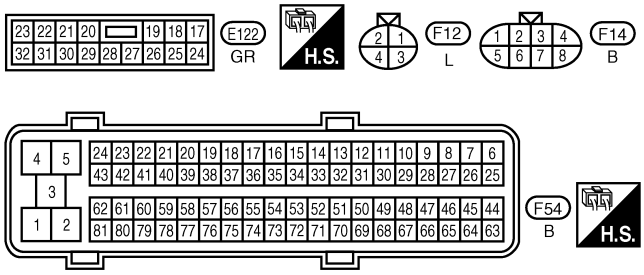

BBWA2510E

Specification data are reference values and are measured between each terminal and ground.

CAUTION:

Do not use ECM ground terminals when measuring input/output voltage. Doing so may result in damage to the ECM's transistor. Use a ground other than ECM terminals, such as the ground.

TER-MI-NAL NO.	WIRE COLOR	ITEM	CONDITION	DATA (DC Voltage)
6	GR	Heated oxygen sensor 2 heater (Bank 2)	**[Engine is running]** • Engine speed: Below 3,600 rpm after the following conditions are met - Engine: After warming up - Keeping the engine speed between 3,500 and 4,000 rpm for 1 minute and at idle for 1 minute under no load.	0 - 1.0V
			[Ignition switch: ON] • Engine stopped **[Engine is running]** • Engine speed: Above 3,600 rpm	BATTERY VOLTAGE (11 - 14V)
55	W	Heated oxygen sensor 2 (Bank 2)	**[Engine is running]** • Revving engine from idle to 3,000 rpm quickly after the following conditions are met - Engine: After warming up - Keeping the engine speed between 3,500 and 4,000 rpm for 1 minute and at idle for 1 minute under no load	0 - Approximately 1.0V
78	B	Heated oxygen sensor 2 ground	**[Engine is running]** • **Warm-up condition** • Idle speed	Approximately 0V

Diagnosis Procedure

INFOID:0000000001717350

1. CHECK GROUND CONNECTIONS

1. Turn ignition switch OFF.
2. Loosen and retighten three ground screws on the body. Refer to EC-138, "Ground Inspection".

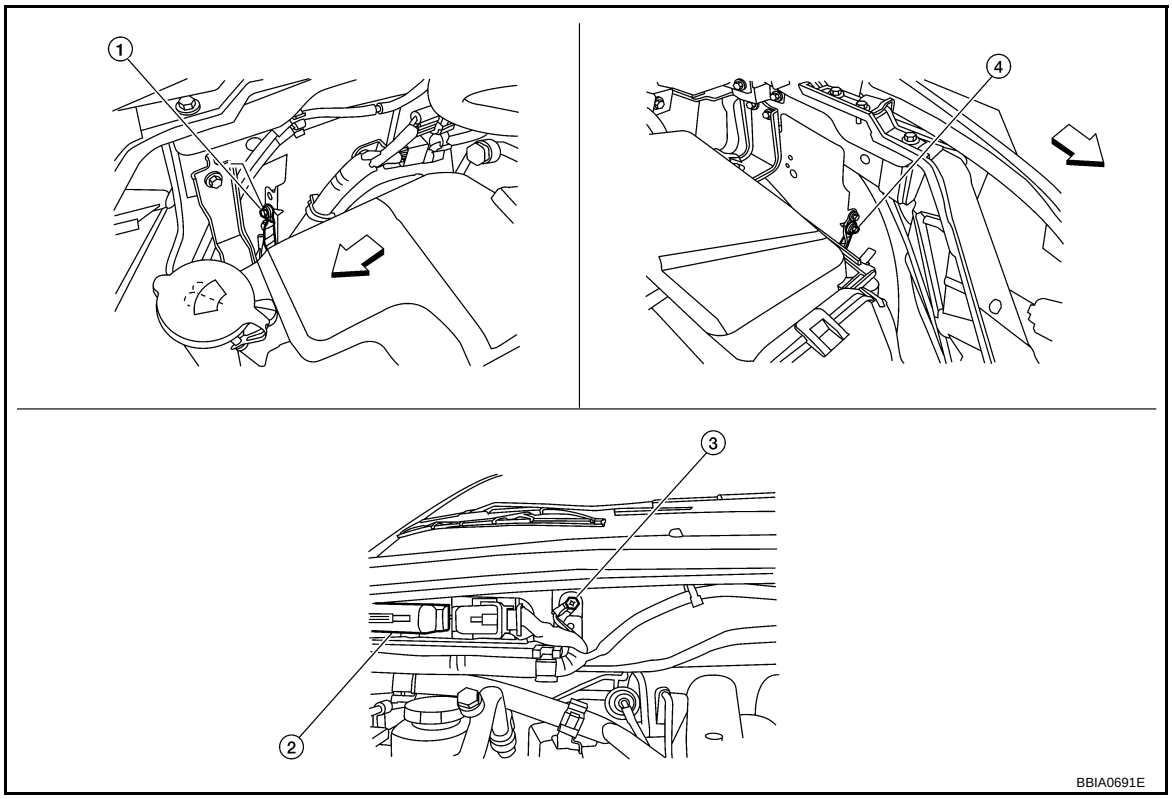

⇦ Vehicle front

1. Body ground E24
2. ECM
3. Body ground E9
4. Body ground E15

OK or NG

OK >> GO TO 2.
NG >> Repair or replace ground connections.

2. CLEAR THE SELF-LEARNING DATA

With CONSULT-III

1. Start engine and warm it up to normal operating temperature.
2. Select “SELF-LEARNING CONT” in “WORK SUPPORT” mode with CONSULT-III.
3. Clear the self-learning control coefficient by touching “CLEAR”.
4. Run engine for at least 10 minutes at idle speed.
   Is the 1st trip DTC P0171 or P0174 detected?
   Is it difficult to start engine?

Without CONSULT-III

1. Start engine and warm it up to normal operating temperature.
2. Turn ignition switch OFF.
3. Disconnect mass air flow sensor harness connector.
4. Restart and let it idle for at least 5 seconds.
5. Stop engine and reconnect mass air flow sensor harness connector.
6. Make sure DTC P0102 is displayed.
7. Erase the DTC memory. Refer to EC-43, "Emission-related Diagnostic Information".
8. Make sure DTC P0000 is displayed.
9. Run engine for at least 10 minutes at idle speed.
   Is the 1st trip DTC P0171 or P0174 detected?
   Is it difficult to start engine?

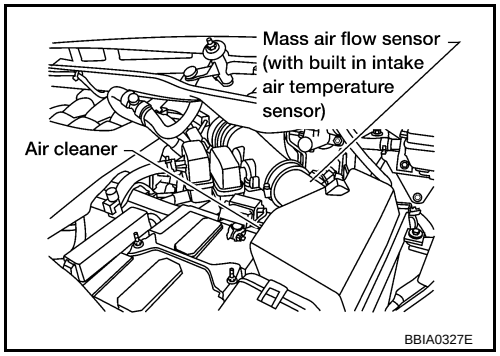

Yes or No

Yes >> Perform trouble diagnosis for DTC P0171, P0174. Refer to EC-271.
No >> GO TO 3.

3. CHECK HO2S2 GROUND CIRCUIT FOR OPEN AND SHORT

1. Turn ignition switch OFF.
2. Disconnect ECM harness connector.
3. Disconnect heated oxygen sensor 2 harness connector.
- Oil pan (1)
- Heated oxygen sensor 2 (bank 2) harness connector (2)
- Heated oxygen sensor 2 (bank 1) harness connector (3)
4. Check harness continuity between ECM terminal 78 and HO2S2 terminal 4.
   Refer to Wiring Diagram.

   Continuity should exist.

5. Also check harness for short to ground and short to power.

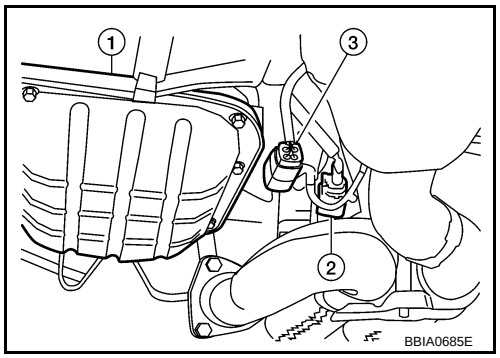

OK or NG

OK >> GO TO 4.
NG >> Repair open circuit or short to ground or short to power in harness or connectors.

4. CHECK HO2S2 INPUT SIGNAL CIRCUIT FOR OPEN AND SHORT

1. Check harness continuity between ECM terminal and HO2S2 terminal as follows.
   Refer to Wiring Diagram.

DTC	Terminals		Bank
	ECM	Sensor	
P0137	74	1	1
P0157	55	1	2

Continuity should exist.

2. Check harness continuity between the following terminals and ground.
   Refer to Wiring Diagram.

DTC	Terminals		Bank
	ECM	Sensor	
P0137	74	1	1
P0157	55	1	2

Continuity should not exist.

3. Also check harness for short to power.

OK or NG

OK >> GO TO 5.
NG >> Repair open circuit or short to ground or short to power in harness or connectors.

5. CHECK HEATED OXYGEN SENSOR 2

Refer to EC-248, "Component Inspection".

OK or NG

OK >> GO TO 6.
NG >> Replace malfunctioning heated oxygen sensor 2.

6. CHECK INTERMITTENT INCIDENT

Refer to EC-130.

>> **INSPECTION END**

Component Inspection

INFOID:0000000001717351

HEATED OXYGEN SENSOR 2

With CONSULT-III

1. Turn ignition switch ON and select “DATA MONITOR” mode with CONSULT-III.
2. Start engine and warm it up to the normal operating temperature.
3. Turn ignition switch OFF and wait at least 10 seconds.
4. Start engine and keep the engine speed between 3,500 and 4,000 rpm for at least 1 minute under no load.
5. Let engine idle for 1 minute.
6. Select “FUEL INJECTION” in “ACTIVE TEST” mode, and select “HO2S2 (B1)/(B2)” as the monitor item with CONSULT-III.
7. Check “HO2S2 (B1)/(B2)” at idle speed when adjusting “FUEL INJECTION” to ±25%.
   “HO2S2 (B1)/(B2)” should be above 0.78V at least once when the “FUEL INJECTION” is +25%.

"HO2S2 (B1)/(B2)" should be below 0.18V at least once when the "FUEL INJECTION" is –25%.

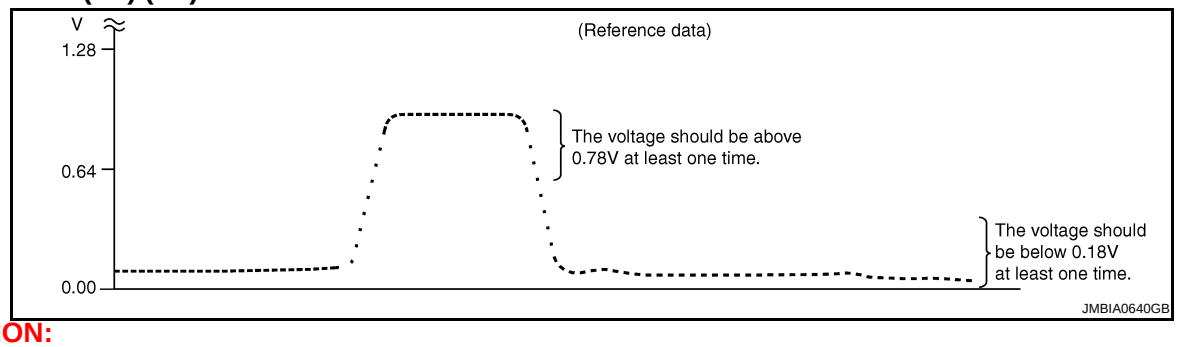

CAUTION:

- **Discard any heated oxygen sensor which has been dropped from a height of more than 0.5 m (19.7 in) onto a hard surface such as a concrete floor; use a new one.**
- **Before installing new oxygen sensor, clean exhaust system threads using Oxygen Sensor Thread Cleaner tool J-43897-18 or J-43897-12 and approved anti-seize lubricant.**

Without CONSULT-III

1. Start engine and warm it up to the normal operating temperature.
2. Turn ignition switch OFF and wait at least 10 seconds.
3. Start engine and keep the engine speed between 3,500 and 4,000 rpm for at least 1 minute under no load.
4. Let engine idle for 1 minute.
5. Set voltmeter probes between ECM terminal 74 [HO2S2 (B1) signal] or 55 [HO2S2 (B2) signal] and ground.
6. Check the voltage when revving up to 4,000 rpm under no load at least 10 times.
   (Depress and release accelerator pedal as soon as possible.)
   The voltage should be above 0.78V at least once during this procedure.
   If the voltage is above 0.78V at step 6, step 7 is not necessary.
7. Keep vehicle at idling for 10 minutes, then check voltage.
   Or check the voltage when coasting from 80 km/h (50 MPH) in D position with "OD" OFF.
   The voltage should be below 0.18V at least once during this procedure.

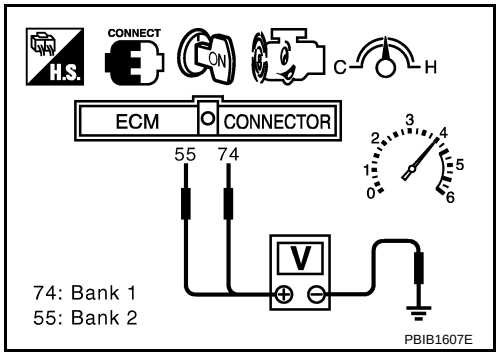

8. If NG, replace heated oxygen sensor 2.

CAUTION:

- **Discard any heated oxygen sensor which has been dropped from a height of more than 0.5 m (19.7 in) onto a hard surface such as a concrete floor; use a new one.**
- **Before installing new oxygen sensor, clean exhaust system threads using Oxygen Sensor Thread Cleaner tool J-43897-18 or J-43897-12 and approved anti-seize lubricant.**

Removal and Installation

INFOID:0000000001717352

HEATED OXYGEN SENSOR 2

Refer to EM-25.

DTC P0138, P0158 HO2S2

Component Description

INFOID:0000000001717353

The heated oxygen sensor 2, after three way catalyst (manifold), monitors the oxygen level in the exhaust gas on each bank.
Even if switching characteristics of the air fuel ratio (A/F) sensor 1 are shifted, the air-fuel ratio is controlled to stoichiometric, by the signal from the heated oxygen sensor 2.
This sensor is made of ceramic zirconia. The zirconia generates voltage from approximately 1V in richer conditions to 0V in leaner conditions.
Under normal conditions the heated oxygen sensor 2 is not used for engine control operation.

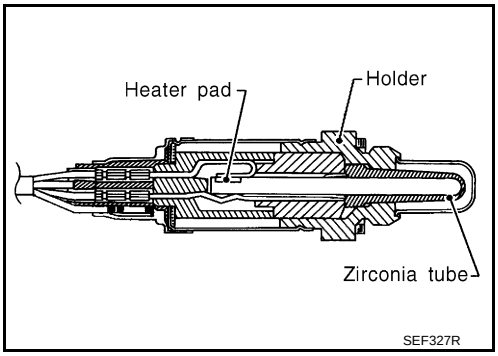

CONSULT-III Reference Value in Data Monitor Mode

INFOID:0000000001717354

Specification data are reference values.

MONITOR ITEM	CONDITION	SPECIFICATION
HO2S2 (B1) HO2S2 (B2)	• Revving engine from idle to 3,000 rpm quickly after the following conditions are met - Engine: After warming up - Keeping the engine speed between 3,500 and 4,000 rpm for 1 minute and at idle for 1 minute under no load	0 - 0.3V ←→ Approx. 0.6 - 1.0V
HO2S2 MNTR (B1) HO2S2 MNTR (B2)		LEAN ←→ RICH

On Board Diagnosis Logic

INFOID:0000000001717355

The heated oxygen sensor 2 has a much longer switching time between rich and lean than the air fuel ratio (A/F) sensor 1. The oxygen storage capacity of the three way catalyst (manifold) causes the longer switching time.

MALFUNCTION A

To judge the malfunctions of heated oxygen sensor 2, ECM monitors whether the voltage is unusually high during the various driving condition such as fuel-cut.

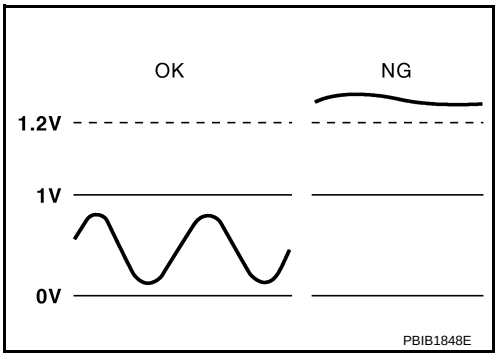

MALFUNCTION B

To judge the malfunctions of heated oxygen sensor 2, ECM monitors whether the minimum voltage of sensor is sufficiently low during the various driving condition such as fuel-cut.

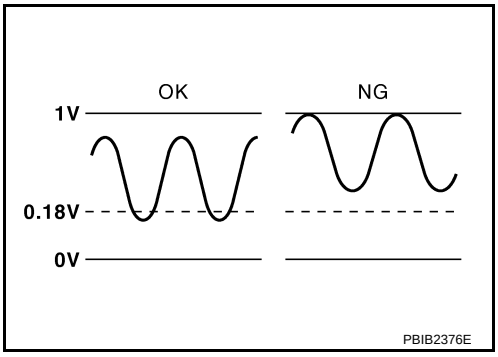

DTC No.	Trouble diagnosis name	DTC detecting condition		Possible cause
P0138 0138 (Bank 1)	Heated oxygen sensor 2 circuit high voltage	A)	An excessively high voltage from the sensor is sent to ECM.	• Harness or connectors (The sensor circuit is open or shorted) • Heated oxygen sensor 2
P0158 0158 (Bank 2)		B)	The minimum voltage from the sensor is not reached to the specified voltage.	• Harness or connectors (The sensor circuit is open or shorted) • Heated oxygen sensor 2 • Fuel pressure • Fuel injector

DTC Confirmation Procedure

INFOID:0000000001717356

Perform PROCEDURE FOR MALFUNCTION A first.
If DTC cannot be confirmed, perform PROCEDURE FOR MALFUNCTION B.
NOTE:
If DTC Confirmation Procedure has been previously conducted, always perform the following before conducting the next step.
1. Turn ignition switch OFF and wait at least 10 seconds.
2. Turn ignition switch ON.
3. Turn ignition switch OFF and wait at least 10 seconds.

PROCEDURE FOR MALFUNCTION A

1. Start engine and warm it up to the normal operating temperature.
2. Turn ignition switch OFF and wait at least 10 seconds.
3. Turn ignition switch ON.
4. Turn ignition switch OFF and wait at least 10 seconds.
5. Start engine and keep the engine speed between 3,500 and 4,000 rpm for at least 1 minute under no load.
6. Let engine idle for 2 minutes.
7. Check 1st trip DTC.
8. If 1st trip DTC is detected, go to EC-256, "Diagnosis Procedure".

PROCEDURE FOR MALFUNCTION B

With CONSULT-III
TESTING CONDITION:
For better results, perform “DTC WORK SUPPORT” at a temperature of 0 to 30 °C (32 to 86 °F).
1. Turn ignition switch ON and select “DATA MONITOR” mode with CONSULT-III.
2. Start engine and warm it up to the normal operating temperature.
3. Turn ignition switch OFF and wait at least 10 seconds.
4. Turn ignition switch ON.
5. Turn ignition switch OFF and wait at least 10 seconds.
6. Start engine and keep the engine speed between 3,500 and 4,000 rpm for at least 1 minute under no load.
7. Let engine idle for 1 minute.
8. Make sure that “COOLAN TEMP/S” indicates more than 70°C (158°F).
   If not, warm up engine and go to next step when “COOLAN TEMP/S” indication reaches to 70°C (158°F).
9. Open engine hood.
10. Select “HO2S2 (B1) P1146” (for DTC P0138) or “HO2S2 (B2) P1166” (for DTC P0158) of “HO2S2” in “DTC WORK SUPPORT” mode with CONSULT-III.
11. Start engine and following the instruction of CONSULT-III.
    NOTE:
    It will take at most 10 minutes until “COMPLETED” is displayed.
12. Make sure that “OK” is displayed after touching “SELF-DIAG RESULTS”.
    If “NG” is displayed, refer to EC-256, "Diagnosis Procedure".

If “CAN NOT BE DIAGNOSED” is displayed, perform the following.

a. Turn ignition switch OFF and leave the vehicle in a cool place (soak the vehicle).

b. Return to step 1.

Overall Function Check

INFOID:0000000001717357

PROCEDURE MALFUNCTION B

Use this procedure to check the overall function of the heated oxygen sensor 2 circuit. During this check, a 1st trip DTC might not be confirmed.

With GST

1. Start engine and warm it up to the normal operating temperature.
2. Turn ignition switch OFF and wait at least 10 seconds.
3. Turn ignition switch ON.
4. Turn ignition switch OFF and wait at least 10 seconds.
5. Start engine and keep the engine speed between 3,500 and 4,000 rpm for at least 1 minute under no load.
6. Let engine idle for 1 minute.
7. Set voltmeter probes between ECM terminal 74 [HO2S2 (B1) signal] or 55 [HO2S2 (B2) signal] and ground.
8. Check the voltage when revving up to 4,000 rpm under no load at least 10 times.
   (Depress and release accelerator pedal as soon as possible.)
   The voltage should be below 0.18V at least once during this procedure.
   If the voltage can be confirmed in step 6, step 7 is not necessary.
9. Keep vehicle at idling for 10 minutes, then check the voltage.
   Or check the voltage when coasting from 80 km/h (50 MPH) in D position with “OD” OFF.
   The voltage should be below 0.18V at least once during this procedure.
10. If NG, go to EC-256, "Diagnosis Procedure".

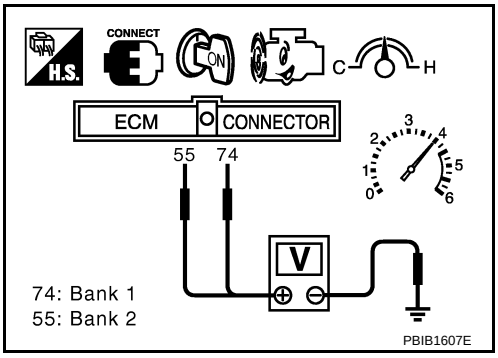

Wiring Diagram

INFOID:0000000001717358

BANK 1

EC-O2S2B1-01

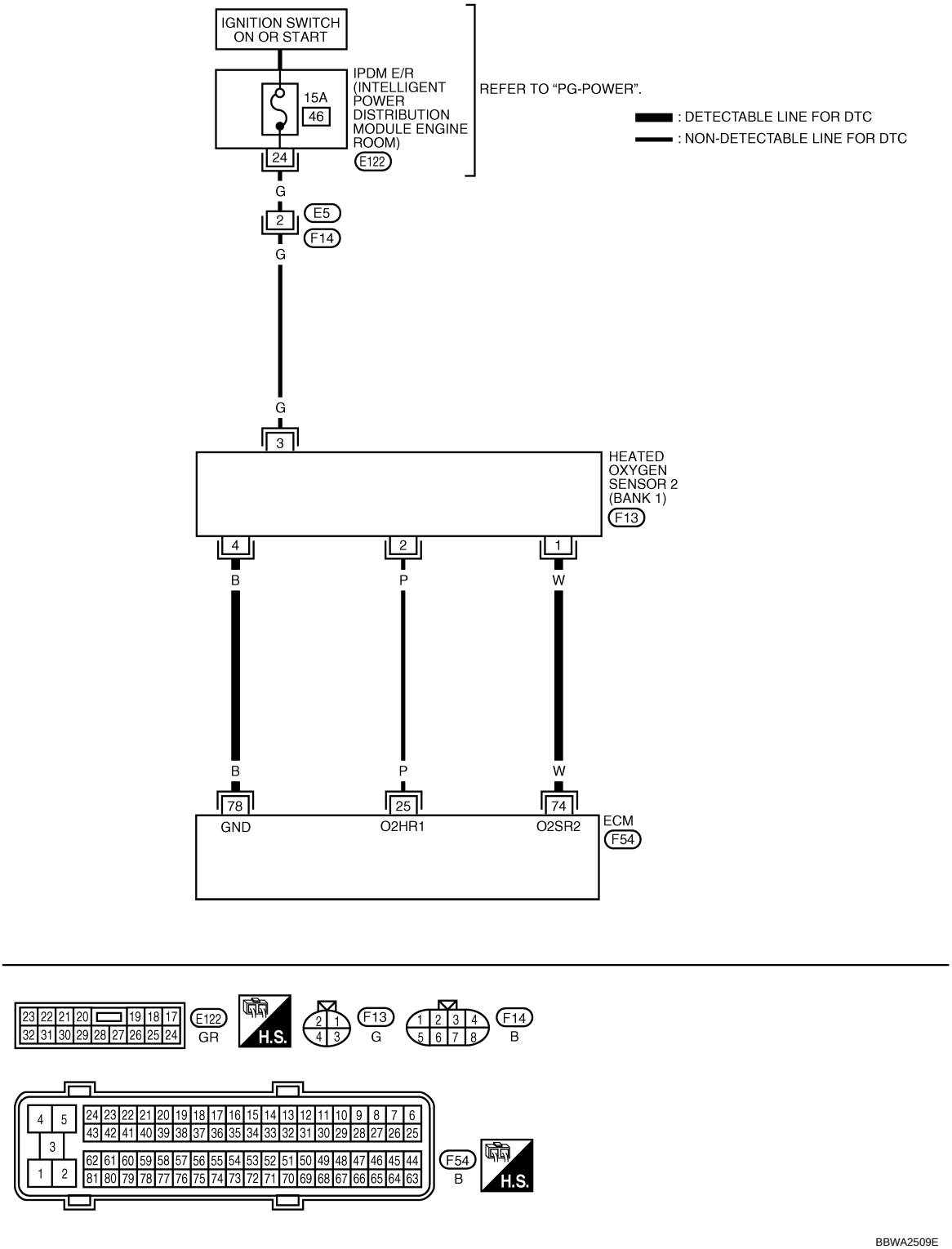

Specification data are reference values and are measured between each terminal and ground.

CAUTION:

Do not use ECM ground terminals when measuring input/output voltage. Doing so may result in damage to the ECM's transistor. Use a ground other than ECM terminals, such as the ground.

TER-MI-NAL NO.	WIRE COLOR	ITEM	CONDITION	DATA (DC Voltage)
25	P	Heated oxygen sensor 2 heater (Bank 1)	**[Engine is running]** • Engine speed: Below 3,600 rpm after the following conditions are met - Engine: After warming up - Keeping the engine speed between 3,500 and 4,000 rpm for 1 minute and at idle for 1 minute under no load.	0 - 1.0V
			[Ignition switch: ON] • Engine stopped **[Engine is running]** • Engine speed: Above 3,600 rpm	BATTERY VOLTAGE (11 - 14V)
74	W	Heated oxygen sensor 2 (Bank 1)	**[Engine is running]** • Revving engine from idle to 3,000 rpm quickly after the following conditions are met - Engine: After warming up - Keeping the engine speed between 3,500 and 4,000 rpm for 1 minute and at idle for 1 minute under no load	0 - Approximately 1.0V
78	B	Heated oxygen sensor 2 ground	**[Engine is running]** • **Warm-up condition** • Idle speed	Approximately 0V

EC-O2S2B2-01

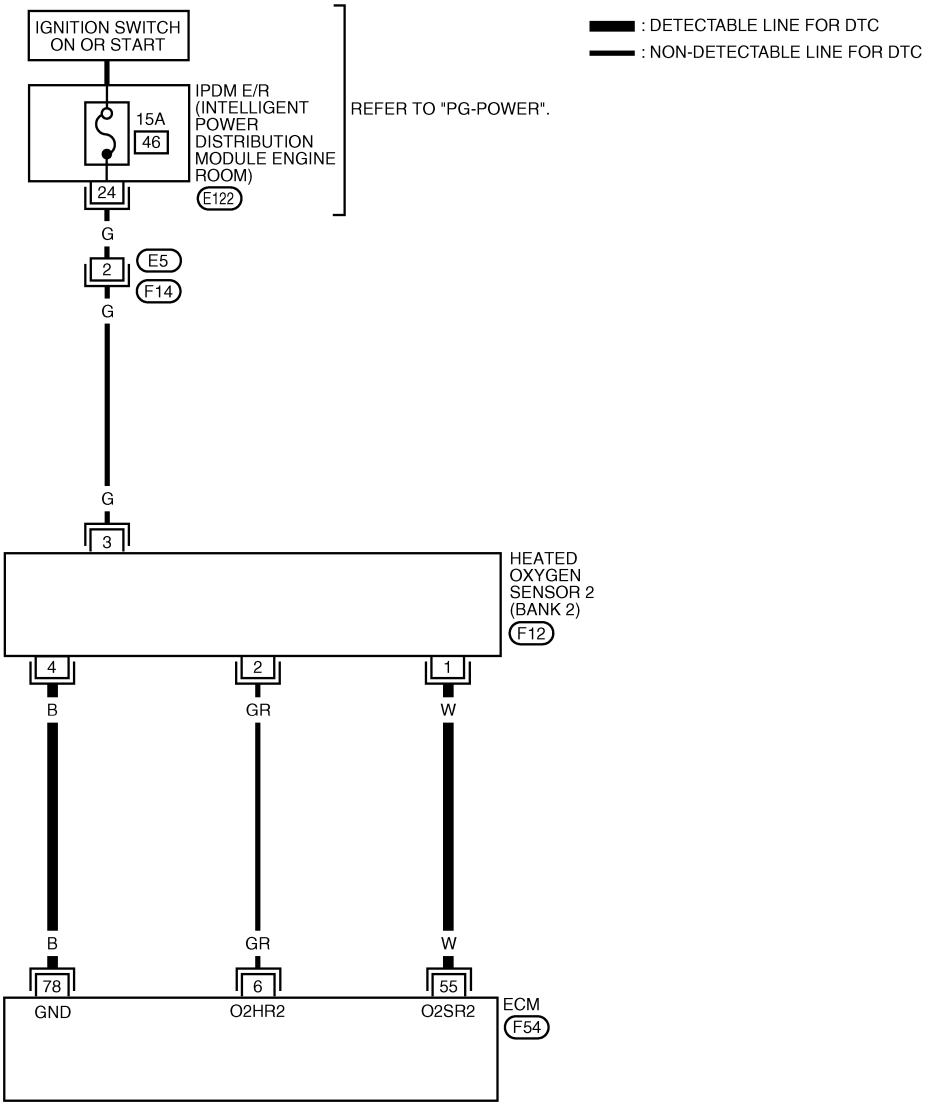

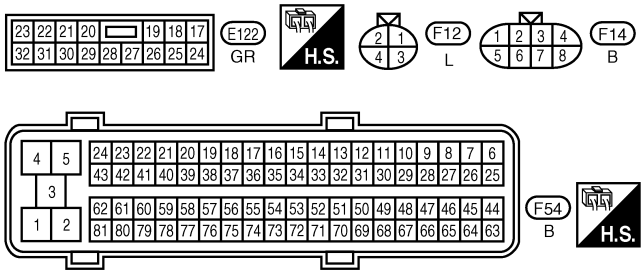

BBWA2510E

Specification data are reference values and are measured between each terminal and ground.

CAUTION:

Do not use ECM ground terminals when measuring input/output voltage. Doing so may result in damage to the ECM's transistor. Use a ground other than ECM terminals, such as the ground.

TERMINAL NO.	WIRE COLOR	ITEM	CONDITION	DATA (DC Voltage)
6	GR	Heated oxygen sensor 2 heater (Bank 2)	**[Engine is running]** • Engine speed: Below 3,600 rpm after the following conditions are met - Engine: After warming up - Keeping the engine speed between 3,500 and 4,000 rpm for 1 minute and at idle for 1 minute under no load.	0 - 1.0V
			[Ignition switch: ON] • Engine stopped **[Engine is running]** • Engine speed: Above 3,600 rpm	BATTERY VOLTAGE (11 - 14V)
55	W	Heated oxygen sensor 2 (Bank 2)	**[Engine is running]** • Revving engine from idle to 3,000 rpm quickly after the following conditions are met - Engine: After warming up - Keeping the engine speed between 3,500 and 4,000 rpm for 1 minute and at idle for 1 minute under no load	0 - Approximately 1.0V
78	B	Heated oxygen sensor 2 ground	**[Engine is running]** • **Warm-up condition** • Idle speed	Approximately 0V

Diagnosis Procedure

INFOID:0000000001717359

PROCEDURE FOR MALFUNCTION A

1. CHECK GROUND CONNECTIONS

1. Turn ignition switch OFF.
2. Loosen and retighten three ground screws on the body. Refer to EC-138, "Ground Inspection".

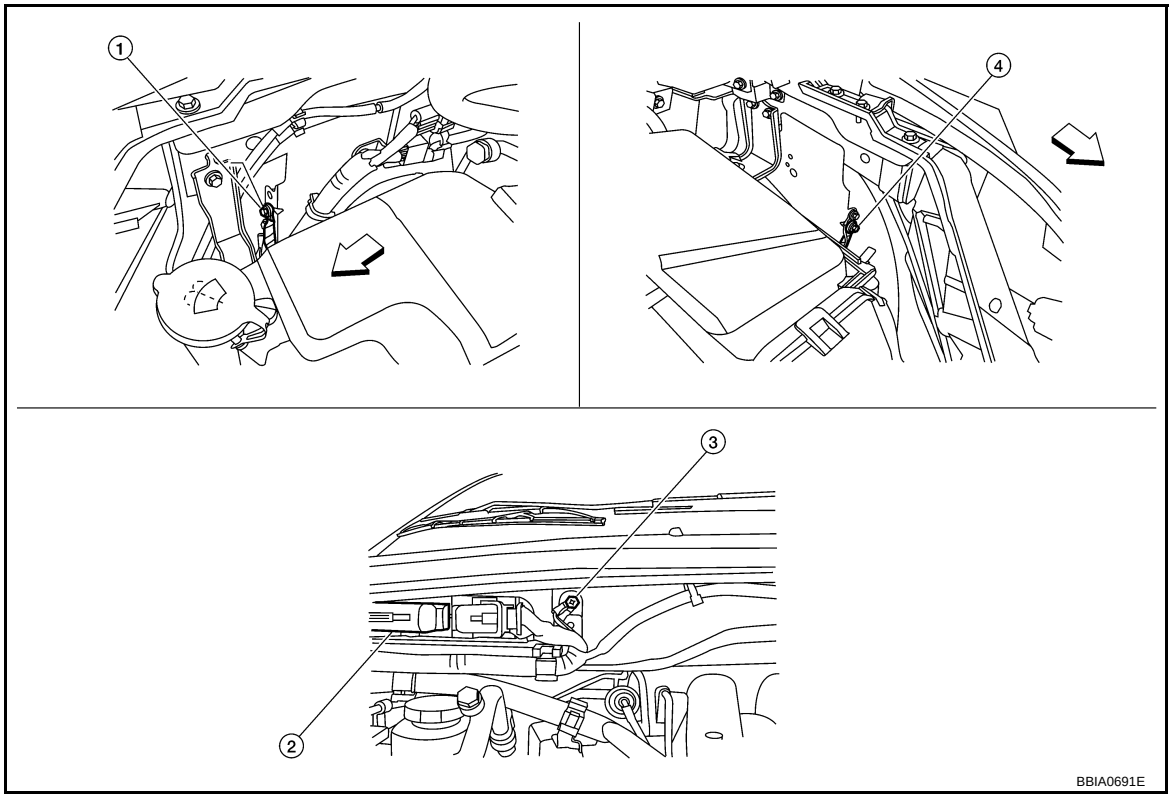

⇦ Vehicle front

1. Body ground E24
2. ECM
3. Body ground E9
4. Body ground E15

OK or NG

OK >> GO TO 2.
NG >> Repair or replace ground connections.

2. CHECK HO2S2 GROUND CIRCUIT FOR OPEN AND SHORT

1. Disconnect ECM harness connector.
2. Disconnect heated oxygen sensor 2 harness connector.
- Oil pan (1)
- Heated oxygen sensor 2 (bank 2) harness connector (2)
- Heated oxygen sensor 2 (bank 1) harness connector (3)
3. Check harness continuity between ECM terminal 78 and HO2S2 terminal 4.
Refer to Wiring Diagram.

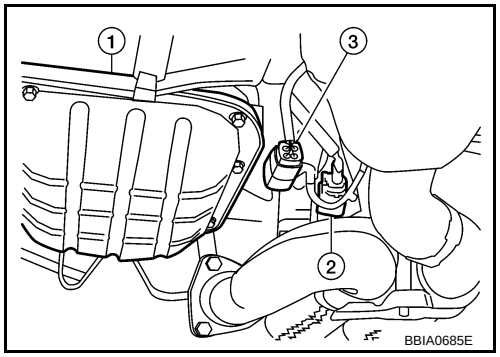

Continuity should exist.

4. Also check harness for short to ground and short to power.

OK or NG

OK >> GO TO 3.
NG >> Repair open circuit or short to ground or short to power in harness or connectors.

3. CHECK HO2S2 INPUT SIGNAL CIRCUIT FOR OPEN AND SHORT

1. Check harness continuity between ECM terminal and HO2S2 terminal as follows.
Refer to Wiring Diagram.

DTC	Terminals		Bank
	ECM	Sensor	
P0138	74	1	1
P0158	55	1	2

Continuity should exist.

2. Check harness continuity between the following terminals and ground.
Refer to Wiring Diagram.

DTC	Terminals		Bank
	ECM	Sensor	
P0138	74	1	1
P0158	55	1	2

Continuity should not exist.

3. Also check harness for short to power.

OK or NG

OK >> GO TO 4.
NG >> Repair open circuit or short to ground or short to power in harness or connectors.

4. CHECK HO2S2 CONNECTOR FOR WATER

Check HO2S2 connectors for water.

Water should not exist.

OK or NG

OK >> GO TO 5.
NG >> Repair or replace harness or connectors.

5. CHECK HEATED OXYGEN SENSOR 2

Refer to EC-260, "Component Inspection".

OK or NG

OK >> GO TO 6.
NG >> Replace malfunctioning heated oxygen sensor 2.

6. CHECK INTERMITTENT INCIDENT

Refer to EC-130.

>> **INSPECTION END**

PROCEDURE FOR MALFUNCTION B

1. CHECK GROUND CONNECTIONS

1. Turn ignition switch OFF.
2. Loosen and retighten three ground screws on the body. Refer to EC-138, "Ground Inspection".

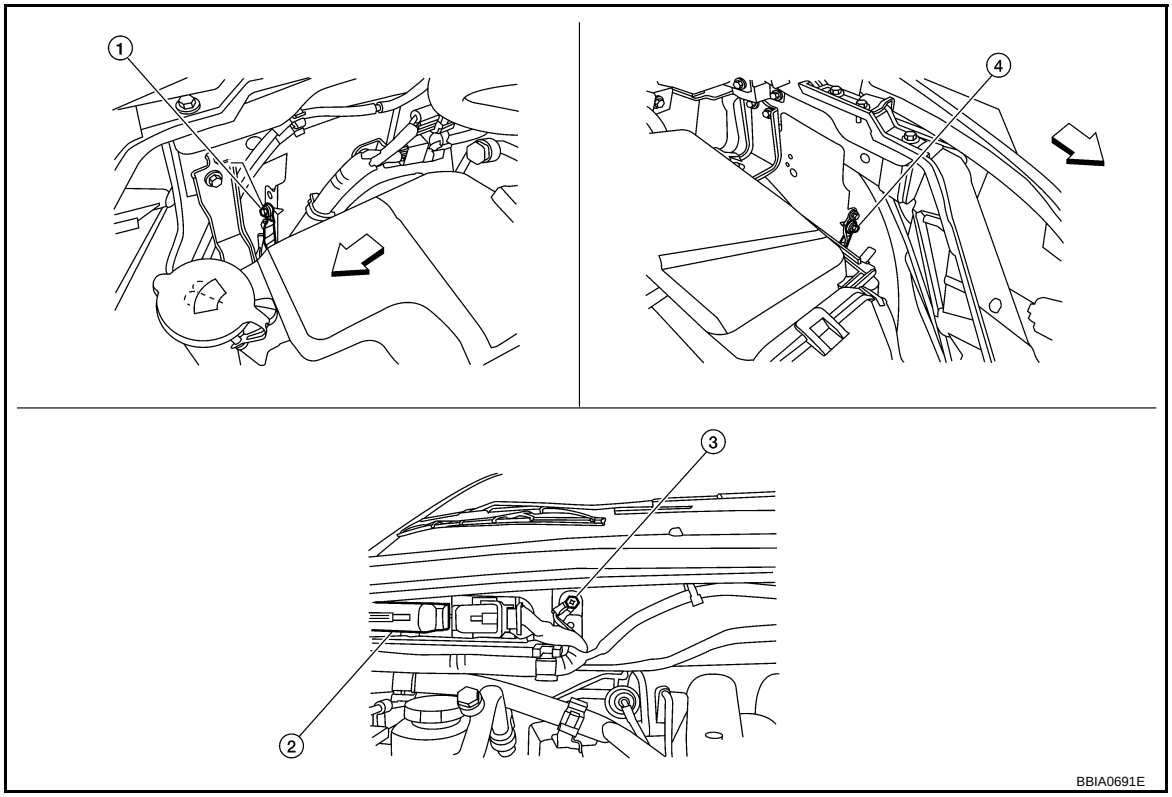

⇦: Vehicle front

1. Body ground E24
2. ECM
3. Body ground E9
4. Body ground E15

OK or NG

OK >> GO TO 2.
NG >> Repair or replace ground connections.

2. CLEAR THE SELF-LEARNING DATA

With CONSULT-III

1. Start engine and warm it up to normal operating temperature.
2. Select “SELF-LEARNING CONT” in “WORK SUPPORT” mode with CONSULT-III.
3. Clear the self-learning control coefficient by touching “CLEAR”.

4. Run engine for at least 10 minutes at idle speed.
Is the 1st trip DTC P0172 or P0175 detected?
Is it difficult to start engine?

Without CONSULT-III

1. Start engine and warm it up to normal operating temperature.
2. Turn ignition switch OFF.
3. Disconnect mass air flow sensor harness connector.
4. Restart engine and let it idle for at least 5 seconds.
5. Stop engine and reconnect mass air flow sensor harness connector.
6. Make sure DTC P0102 is displayed.
7. Erase the DTC memory. Refer to EC-43, "Emission-related Diagnostic Information".
8. Make sure DTC P0000 is displayed.
9. Run engine for at least 10 minutes at idle speed.
Is the 1st trip DTC P0172 or P0175 detected?
Is it difficult to start engine?

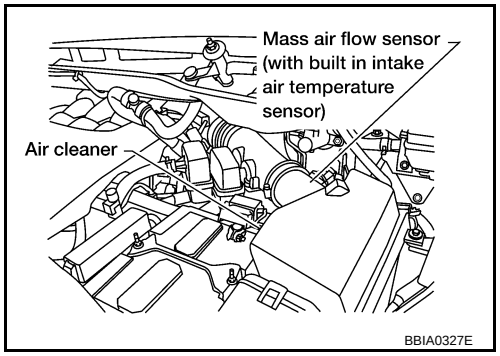

Yes or No

Yes >> Perform trouble diagnosis for DTC P0172, P0175. Refer to EC-281.
No >> GO TO 3.

3. CHECK HO2S2 GROUND CIRCUIT FOR OPEN AND SHORT

1. Turn ignition switch OFF.
2. Disconnect ECM harness connector.
3. Disconnect heated oxygen sensor 2 harness connector.
- Oil pan (1)
- Heated oxygen sensor 2 (bank 2) harness connector (2)
- Heated oxygen sensor 2 (bank 1) harness connector (3)
4. Check harness continuity between ECM terminal 78 and HO2S2 terminal 4.
Refer to Wiring Diagram.

Continuity should exist.

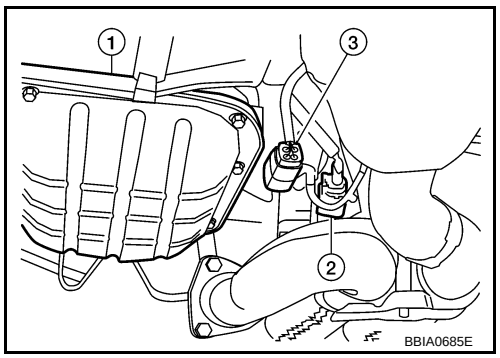

5. Also check harness for short to ground and short to power.

OK or NG

OK >> GO TO 4.
NG >> Repair open circuit or short to ground or short to power in harness or connectors.

4. CHECK HO2S2 INPUT SIGNAL CIRCUIT FOR OPEN AND SHORT

1. Check harness continuity between ECM terminal and HO2S2 terminal as follows.
Refer to Wiring Diagram.

DTC	Terminals		Bank
	ECM	Sensor	
P0138	74	1	1
P0158	55	1	2

Continuity should exist.

2. Check harness continuity between the following terminals and ground.
Refer to Wiring Diagram.

DTC	Terminals		Bank
	ECM	Sensor	
P0138	74	1	1
P0158	55	1	2

Continuity should not exist.

3. Also check harness for short to power.

OK or NG

OK >> GO TO 5.
NG >> Repair open circuit or short to ground or short to power in harness or connectors.

5. CHECK HEATED OXYGEN SENSOR 2

Refer to EC-260, "Component Inspection".

OK or NG

OK >> GO TO 6.
NG >> Replace malfunctioning heated oxygen sensor 2.

6. CHECK INTERMITTENT INCIDENT

Refer to EC-130.

>> **INSPECTION END**

Component Inspection

INFOID:0000000001717360

HEATED OXYGEN SENSOR 2

With CONSULT-III

1. Start engine and warm it up to the normal operating temperature.
2. Turn ignition switch OFF and wait at least 10 seconds.
3. Start engine and keep the engine speed between 3,500 and 4,000 rpm for at least 1 minute under no load.
4. Let engine idle for 1 minute.
5. Select “FUEL INJECTION” in “ACTIVE TEST” mode, and select “HO2S2 (B1)/(B2)” as the monitor item with CONSULT-III.
6. Check “HO2S2 (B1)/(B2)” at idle speed when adjusting “FUEL INJECTION” to ±25%.

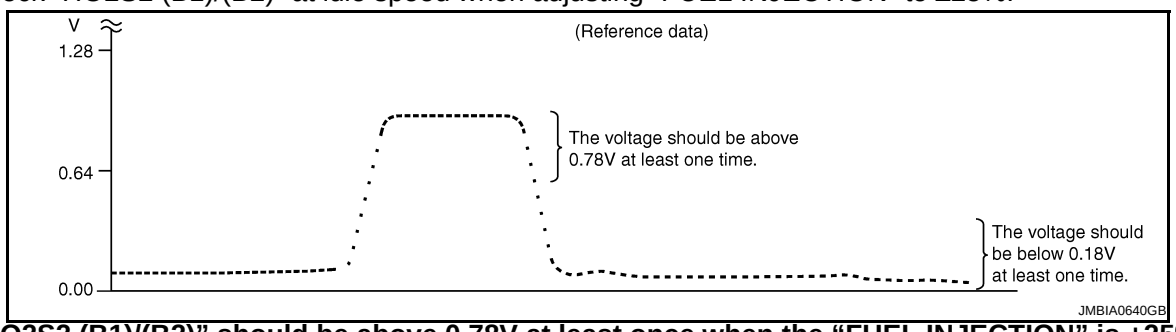

“HO2S2 (B1)/(B2)” should be above 0.78V at least once when the “FUEL INJECTION” is +25%.
“HO2S2 (B1)/(B2)” should be below 0.18V at least once when the “FUEL INJECTION” is –25%.

7. If NG, replace heated oxygen sensor 2.

CAUTION:

- **Discard any heated oxygen sensor which has been dropped from a height of more than 0.5 m (19.7 in) onto a hard surface such as a concrete floor; use a new one.**
- **Before installing new oxygen sensor, clean exhaust system threads using Oxygen Sensor Thread Cleaner tool J-43897-18 or J-43897-12 and approved anti-seize lubricant.**

Without CONSULT-III

1. Start engine and warm it up to the normal operating temperature.
2. Turn ignition switch OFF and wait at least 10 seconds.
3. Start engine and keep the engine speed between 3,500 and 4,000 rpm for at least 1 minute under no load.
4. Let engine idle for 1 minute.
5. Set voltmeter probes between ECM terminal 74 [HO2S2 (B1) signal] or 55 [HO2S2 (B2) signal] and ground.

6. Check the voltage when revving up to 4,000 rpm under no load at least 10 times.
   (Depress and release accelerator pedal as soon as possible.)
   The voltage should be above 0.78V at least once during this procedure.
   If the voltage is above 0.78V at step 6, step 7 is not necessary.
7. Keep vehicle at idling for 10 minutes, then check voltage.
   Or check the voltage when coasting from 80 km/h (50 MPH) in D position with “OD” OFF.
   The voltage should be below 0.18V at least once during this procedure.
8. If NG, replace heated oxygen sensor 2.

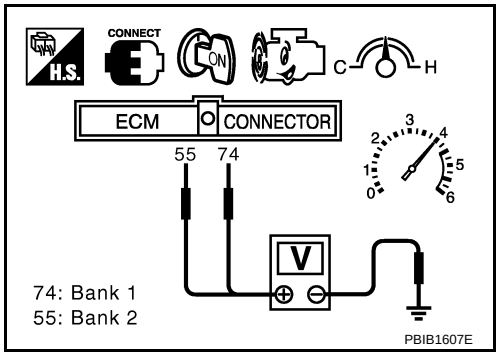

CAUTION:
- **Discard any heated oxygen sensor which has been dropped from a height of more than 0.5 m (19.7 in) onto a hard surface such as a concrete floor; use a new one.**
- **Before installing new oxygen sensor, clean exhaust system threads using Oxygen Sensor Thread Cleaner tool J-43897-18 or J-43897-12 and approved anti-seize lubricant.**

Removal and Installation

INFOID:0000000001717361

HEATED OXYGEN SENSOR 2

Refer to EM-25.

DTC P0139, P0159 HO2S2

Component Description

INFOID:0000000001717362

The heated oxygen sensor 2, after three way catalyst (manifold), monitors the oxygen level in the exhaust gas on each bank.
Even if switching characteristics of the A/F sensor 1 are shifted, the air-fuel ratio is controlled to stoichiometric, by the signal from the heated oxygen sensor 2.
This sensor is made of ceramic zirconia. The zirconia generates voltage from approximately 1V in richer conditions to 0V in leaner conditions.
Under normal conditions the heated oxygen sensor 2 is not used for engine control operation.

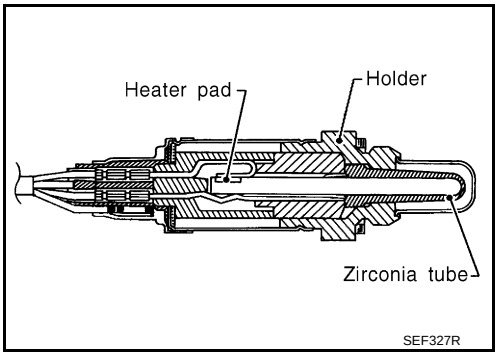

CONSULT-III Reference Value in Data Monitor Mode

INFOID:0000000001717363

Specification data are reference values.

MONITOR ITEM	CONDITION	SPECIFICATION
HO2S2 (B1) HO2S2 (B2)	• Revving engine from idle to 3,000 rpm quickly after the following conditions are met - Engine: After warming up - Keeping the engine speed between 3,500 and 4,000 rpm for 1 minute and at idle for 1 minute under no load	0 - 0.3V ←→ Approx. 0.6 - 1.0V
HO2S2 MNTR (B1) HO2S2 MNTR (B2)		LEAN ←→ RICH

On Board Diagnosis Logic

INFOID:0000000001717364

The heated oxygen sensor 2 has a much longer switching time between rich and lean than the A/F sensor 1. The oxygen storage capacity of the three way catalyst (manifold) causes the longer switching time. To judge the malfunctions of heated oxygen sensor 2, ECM monitors whether the switching response of the sensor's voltage is faster than specified during the various driving condition such as fuel-cut.

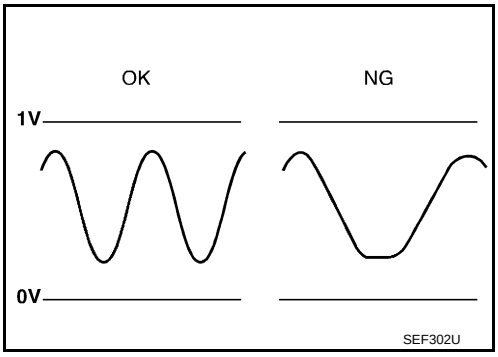

DTC No.	Trouble diagnosis name	DTC detecting condition	Possible cause
P0139 0139 (Bank 1)	Heated oxygen sensor 2 circuit slow response	It takes more time for the sensor to respond between rich and lean than the specified time.	• Harness or connectors (The sensor circuit is open or shorted) • Heated oxygen sensor 2 • Fuel pressure • Fuel injector • Intake air leaks
P0159 0159 (Bank 2)			

DTC Confirmation Procedure

INFOID:0000000001717365

NOTE:
If DTC Confirmation Procedure has been previously conducted, always perform the following before conducting the next step.
1. Turn ignition switch OFF and wait at least 10 seconds.
2. Turn ignition switch ON.
3. Turn ignition switch OFF and wait at least 10 seconds.

WITH CONSULT-III

TESTING CONDITION:
For better results, perform “DTC WORK SUPPORT” at a temperature of 0 to 30 °C (32 to 86 °F).

1. Turn ignition switch ON and select “DATA MONITOR” mode with CONSULT-III.
2. Start engine and warm it up to the normal operating temperature.
3. Turn ignition switch OFF and wait at least 10 seconds.
4. Turn ignition switch ON.
5. Turn ignition switch OFF and wait at least 10 seconds.
6. Start engine and keep the engine speed between 3,500 and 4,000 rpm for at least 1 minute under no load.
7. Let engine idle for 1 minute.
8. Make sure that “COOLAN TEMP/S” indicates more than 70°C (158°F).
   If not, warm up engine and go to next step when “COOLAN TEMP/S” indication reaches to 70°C (158°F).
9. Select “HO2S2 (B1) P0139” or “HO2S2 (B2) P0159” of “HO2S2” in “DTC WORK SUPPORT” mode with CONSULT-III.
10. Start engine and following the instruction of CONSULT-III.
    NOTE:
    It will take at most 10 minutes until “COMPLETED” is displayed.
11. Make sure that “OK” is displayed after touching “SELF-DIAG RESULTS”.
    If “NG” is displayed, refer to EC-267, "Diagnosis Procedure".
    If “CAN NOT BE DIAGNOSED” is displayed, perform the following.

a. Turn ignition switch OFF and leave the vehicle in a cool place (soak the vehicle).
b. Return to step 1.

Overall Function Check

INFOID:0000000001717366

Use this procedure to check the overall function of the heated oxygen sensor 2 circuit. During this check, a 1st trip DTC might not be confirmed.

WITH GST

1. Start engine and warm it up to the normal operating temperature.
2. Turn ignition switch OFF and wait at least 10 seconds.
3. Turn ignition switch ON.
4. Turn ignition switch OFF and wait at least 10 seconds.
5. Start engine and keep the engine speed between 3,500 and 4,000 rpm for at least 1 minute under no load.
6. Let engine idle for 1 minute.
7. Set voltmeter probes between ECM terminal 74 [HO2S2 (B1) signal] or 55 [HO2S2 (B2) signal] and ground.
8. Check the voltage when revving up to 4,000 rpm under no load at least 10 times.
   (Depress and release accelerator pedal as soon as possible.)
   A change of voltage should be more than 0.24V for 1 second during this procedure.
   If the voltage can be confirmed in step 6, step 7 is not necessary.

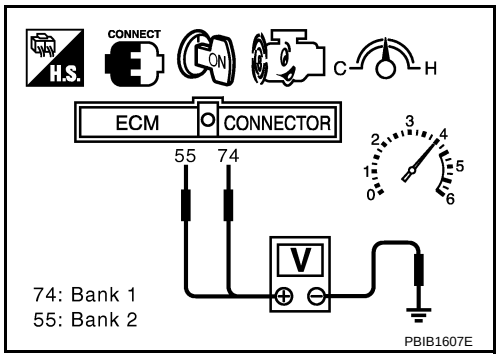

9. Keep vehicle at idling for 10 minutes, then check the voltage.
   Or check the voltage when coasting from 80 km/h (50 MPH) in D position with “OD” OFF.
   A change of voltage should be more than 0.24V for 1 second during this procedure.
10. If NG, go to EC-267, "Diagnosis Procedure".

Wiring Diagram

INFOID:0000000001717367

BANK 1

EC-O2S2B1-01

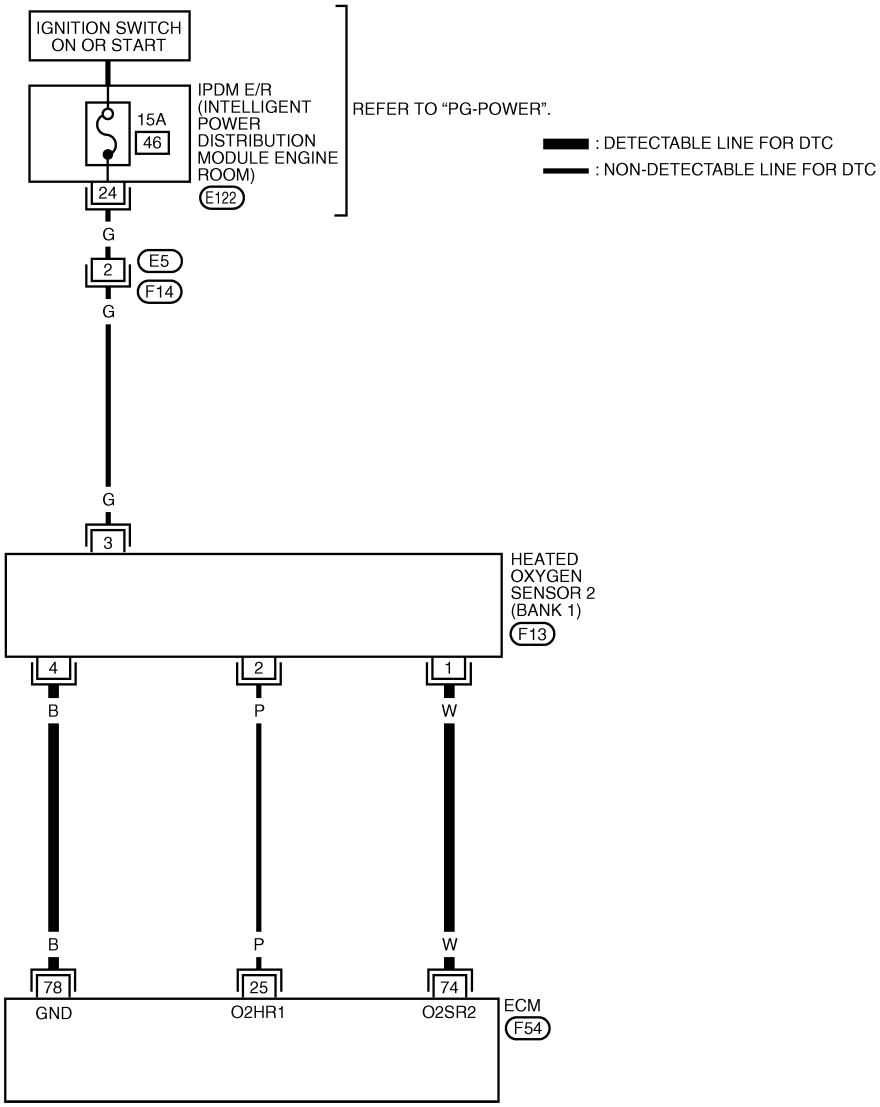

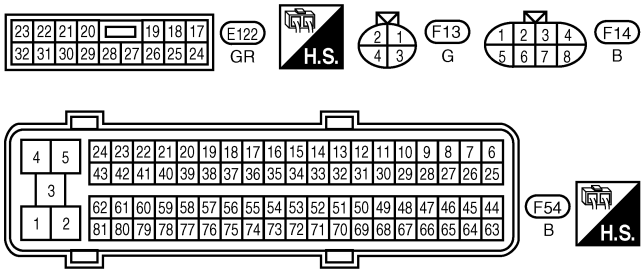

BBWA2509E

Specification data are reference values and are measured between each terminal and ground.

CAUTION:

Do not use ECM ground terminals when measuring input/output voltage. Doing so may result in damage to the ECM's transistor. Use a ground other than ECM terminals, such as the ground.

TER-MI-NAL NO.	WIRE COLOR	ITEM	CONDITION	DATA (DC Voltage)
25	P	Heated oxygen sensor 2 heater (Bank 1)	**[Engine is running]** • Engine speed: Below 3,600 rpm after the following conditions are met - Engine: After warming up - Keeping the engine speed between 3,500 and 4,000 rpm for 1 minute and at idle for 1 minute under no load.	0 - 1.0V
			[Ignition switch: ON] • Engine stopped **[Engine is running]** • Engine speed: Above 3,600 rpm	BATTERY VOLTAGE (11 - 14V)
74	W	Heated oxygen sensor 2 (Bank 1)	**[Engine is running]** • Revving engine from idle to 3,000 rpm quickly after the following conditions are met - Engine: After warming up - Keeping the engine speed between 3,500 and 4,000 rpm for 1 minute and at idle for 1 minute under no load	0 - Approximately 1.0V
78	B	Heated oxygen sensor 2 ground	**[Engine is running]** • **Warm-up condition** • Idle speed	Approximately 0V

EC-O2S2B2-01

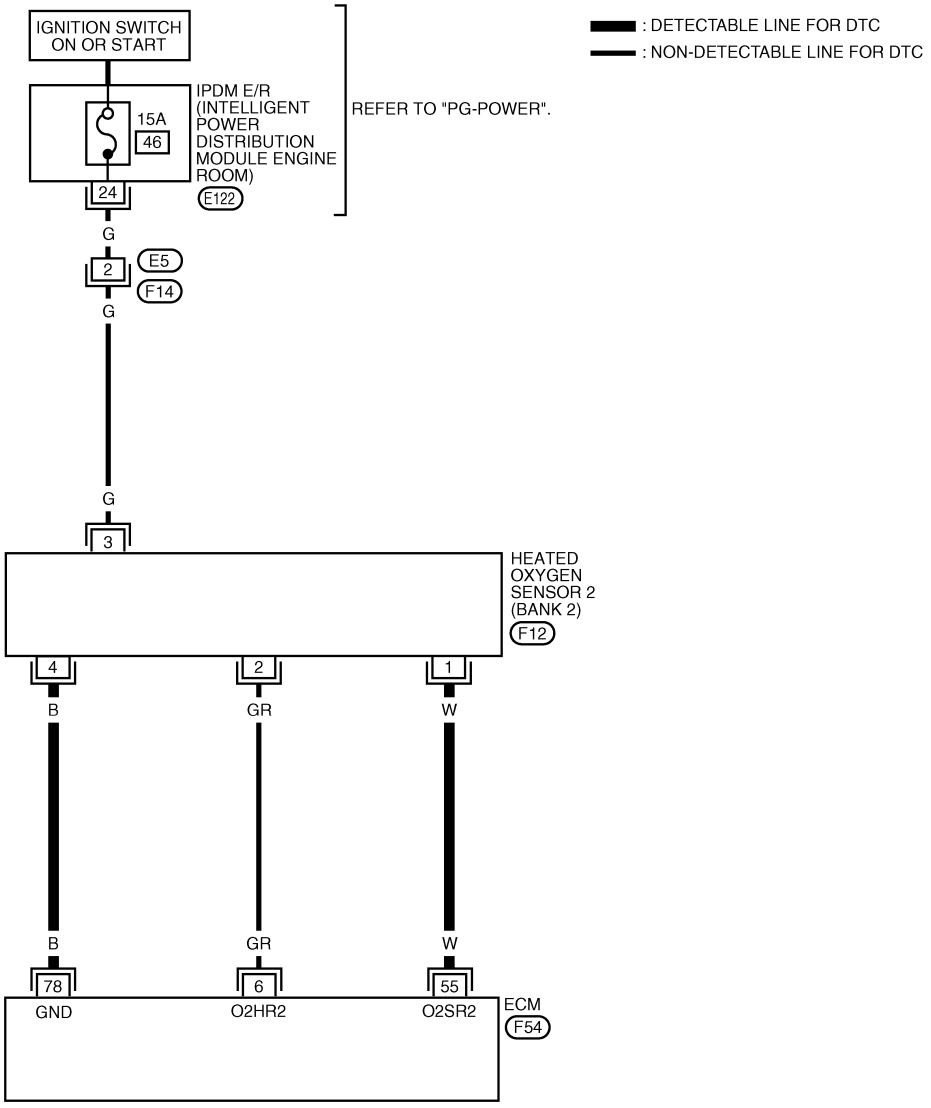

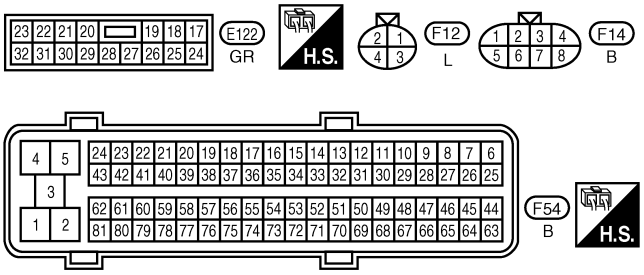

BBWA2510E

Specification data are reference values and are measured between each terminal and ground.

CAUTION:

Do not use ECM ground terminals when measuring input/output voltage. Doing so may result in damage to the ECM's transistor. Use a ground other than ECM terminals, such as the ground.

TERMINAL NO.	WIRE COLOR	ITEM	CONDITION	DATA (DC Voltage)
6	GR	Heated oxygen sensor 2 heater (Bank 2)	**[Engine is running]** • Engine speed: Below 3,600 rpm after the following conditions are met - Engine: After warming up - Keeping the engine speed between 3,500 and 4,000 rpm for 1 minute and at idle for 1 minute under no load.	0 - 1.0V
			[Ignition switch: ON] • Engine stopped **[Engine is running]** • Engine speed: Above 3,600 rpm	BATTERY VOLTAGE (11 - 14V)
55	W	Heated oxygen sensor 2 (Bank 2)	**[Engine is running]** • Revving engine from idle to 3,000 rpm quickly after the following conditions are met - Engine: After warming up - Keeping the engine speed between 3,500 and 4,000 rpm for 1 minute and at idle for 1 minute under no load	0 - Approximately 1.0V
78	B	Heated oxygen sensor 2 ground	**[Engine is running]** • **Warm-up condition** • Idle speed	Approximately 0V

Diagnosis Procedure

INFOID:0000000001717368

1. CHECK GROUND CONNECTIONS

1. Turn ignition switch OFF.
2. Loosen and retighten three ground screws on the body. Refer to EC-138, "Ground Inspection".

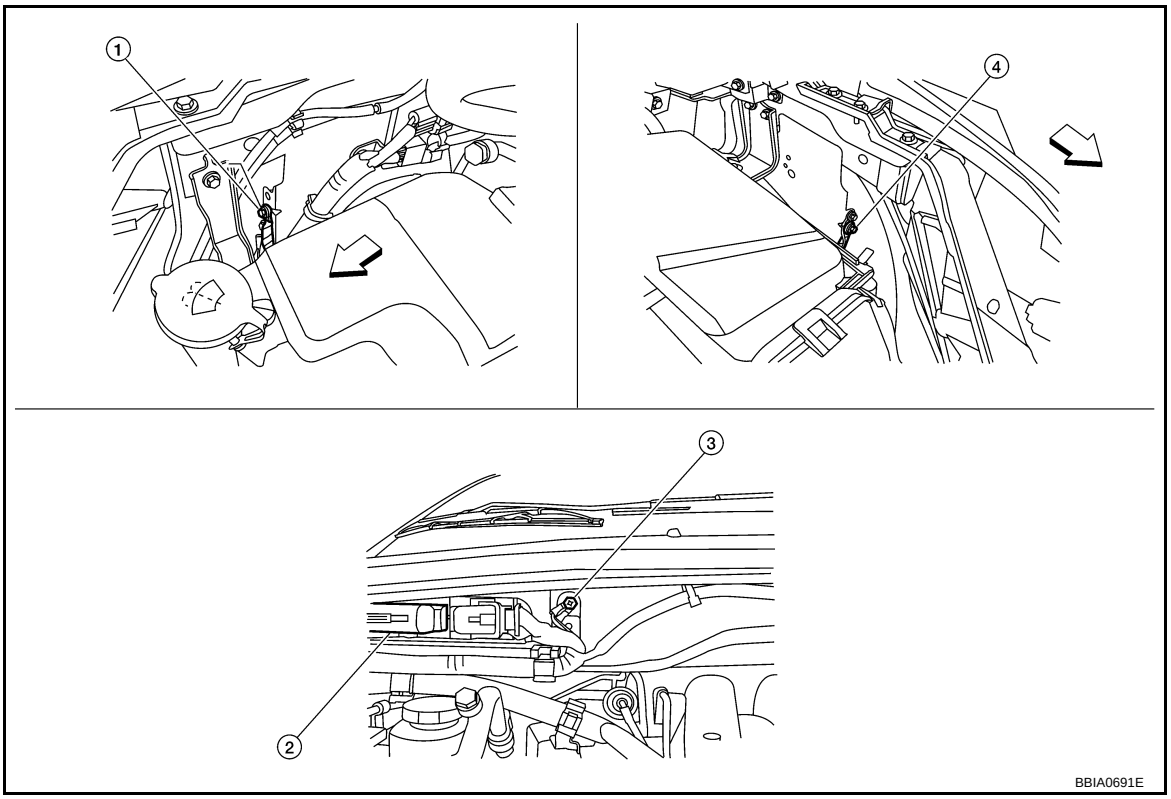

⇦: Vehicle front

1. Body ground E24
2. ECM
3. Body ground E9
4. Body ground E15

OK or NG

OK >> GO TO 2.
NG >> Repair or replace ground connections.

2. CLEAR THE SELF-LEARNING DATA

With CONSULT-III

1. Start engine and warm it up to normal operating temperature.
2. Select “SELF-LEARNING CONT” in “WORK SUPPORT” mode with CONSULT-III.
3. Clear the self-learning control coefficient by touching “CLEAR”.
4. Run engine for at least 10 minutes at idle speed.
   Is the 1st trip DTC P0171, P0172, P0174 or P0175 detected?
   Is it difficult to start engine?

Without CONSULT-III

1. Start engine and warm it up to normal operating temperature.
2. Turn ignition switch OFF.
3. Disconnect mass air flow sensor harness connector.
4. Restart engine and let it idle for at least 5 seconds.
5. Stop engine and reconnect mass air flow sensor harness connector.
6. Make sure DTC P0102 is displayed.
7. Erase the DTC memory. Refer to EC-43, "Emission-related Diagnostic Information".
8. Make sure DTC P0000 is displayed.
9. Run engine for at least 10 minutes at idle speed.
   Is the 1st trip DTC P0171, P0172, P0174 or P0175 detected?
   Is it difficult to start engine?

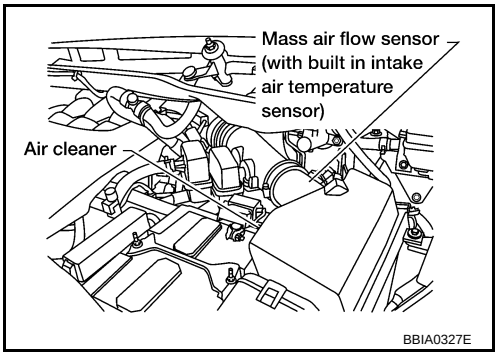

Yes or No

Yes >> Perform trouble diagnosis for DTC P0171, P0174 or P0172, P0175. Refer to EC-271 or EC-281.
No >> GO TO 3.

3. CHECK HO2S2 GROUND CIRCUIT FOR OPEN AND SHORT

1. Turn ignition switch OFF.
2. Disconnect ECM harness connector.
3. Disconnect heated oxygen sensor 2 harness connector.
- Oil pan (1)
- Heated oxygen sensor 2 (bank 2) harness connector (2)
- Heated oxygen sensor 2 (bank 1) harness connector (3)
4. Check harness continuity between ECM terminal 78 and HO2S2 terminal 4.
   Refer to Wiring Diagram.

   Continuity should exist.

5. Also check harness for short to ground and short to power.

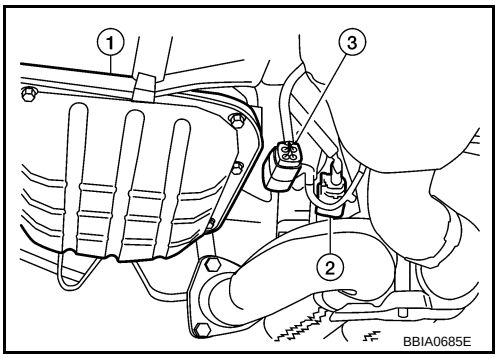

OK or NG

OK >> GO TO 4.
NG >> Repair open circuit or short to ground or short to power in harness or connectors.

4. CHECK HO2S2 INPUT SIGNAL CIRCUIT FOR OPEN AND SHORT

1. Check harness continuity between ECM terminal and HO2S2 terminal as follows.
   Refer to Wiring Diagram.

DTC	Terminals		Bank
	ECM	Sensor	
P0139	74	1	1
P0159	55	1	2

Continuity should exist.

2. Check harness continuity between the following terminals and ground.
   Refer to Wiring Diagram.

DTC	Terminals		Bank
	ECM	Sensor	
P0139	74	1	1
P0159	55	1	2

Continuity should not exist.

3. Also check harness for short to power.

OK or NG

OK >> GO TO 5.
NG >> Repair open circuit or short to ground or short to power in harness or connectors.

5. CHECK HEATED OXYGEN SENSOR 2

Refer to EC-269, "Component Inspection".

OK or NG

OK >> GO TO 6.
NG >> Replace malfunctioning heated oxygen sensor 2.

6. CHECK INTERMITTENT INCIDENT

Refer to EC-130.

>> **INSPECTION END**

Component Inspection

INFOID:0000000001717369

HEATED OXYGEN SENSOR 2

With CONSULT-III

1. Turn ignition switch ON and select “DATA MONITOR” mode with CONSULT-III.
2. Start engine and warm it up to the normal operating temperature.
3. Turn ignition switch OFF and wait at least 10 seconds.
4. Start engine and keep the engine speed between 3,500 and 4,000 rpm for at least 1 minute under no load.
5. Let engine idle for 1 minute.
6. Select “FUEL INJECTION” in “ACTIVE TEST” mode, and select “HO2S2 (B1)/(B2)” as the monitor item with CONSULT-III.

7. Check “HO2S2 (B1)/(B2)” at idle speed when adjusting “FUEL INJECTION” to ±25%.

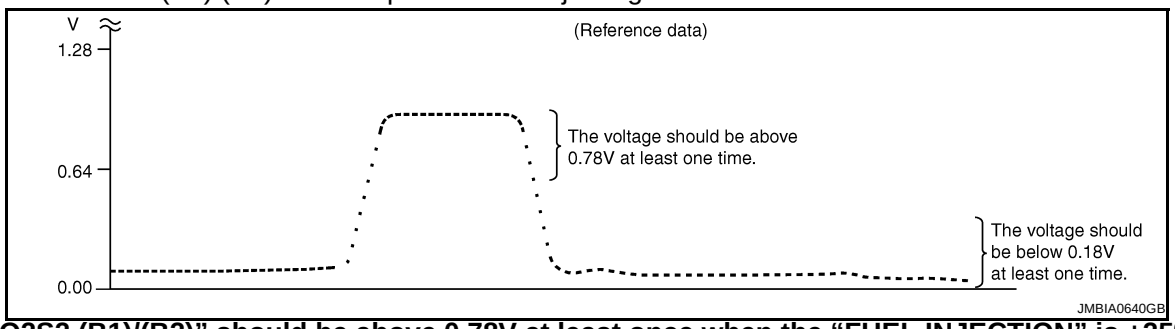

“HO2S2 (B1)/(B2)” should be above 0.78V at least once when the “FUEL INJECTION” is +25%.
“HO2S2 (B1)/(B2)” should be below 0.18V at least once when the “FUEL INJECTION” is –25%.

CAUTION:
- **Discard any heated oxygen sensor which has been dropped from a height of more than 0.5 m (19.7 in) onto a hard surface such as a concrete floor; use a new one.**
- **Before installing new oxygen sensor, clean exhaust system threads using Oxygen Sensor Thread Cleaner tool J-43897-18 or J-43897-12 and approved anti-seize lubricant.**

Without CONSULT-III

1. Start engine and warm it up to the normal operating temperature.
2. Turn ignition switch OFF and wait at least 10 seconds.
3. Start engine and keep the engine speed between 3,500 and 4,000 rpm for at least 1 minute under no load.
4. Let engine idle for 1 minute.
5. Set voltmeter probes between ECM terminal 74 [HO2S2 (B1) signal] or 55 [HO2S2 (B2) signal] and ground.
6. Check the voltage when revving up to 4,000 rpm under no load at least 10 times.
   (Depress and release accelerator pedal as soon as possible.)
   The voltage should be above 0.78V at least once during this procedure.
   If the voltage is above 0.78V at step 6, step 7 is not necessary.
7. Keep vehicle at idling for 10 minutes, then check voltage.
   Or check the voltage when coasting from 80 km/h (50 MPH) in D position with “OD” OFF.
   The voltage should be below 0.18V at least once during this procedure.

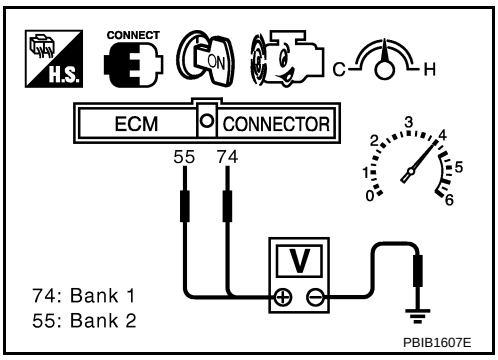

8. If NG, replace heated oxygen sensor 2.

CAUTION:
- **Discard any heated oxygen sensor which has been dropped from a height of more than 0.5 m (19.7 in) onto a hard surface such as a concrete floor; use a new one.**
- **Before installing new oxygen sensor, clean exhaust system threads using Oxygen Sensor Thread Cleaner tool J-43897-18 or J-43897-12 and approved anti-seize lubricant.**

Removal and Installation

INFOID:0000000001717370

HEATED OXYGEN SENSOR 2

Refer to EM-25.

DTC P0171, P0174 FUEL INJECTION SYSTEM FUNCTION

On Board Diagnosis Logic

INFOID:0000000001717371

With the Air/Fuel Mixture Ratio Self-Learning Control, the actual mixture ratio can be brought closely to the theoretical mixture ratio based on the mixture ratio feedback signal from the A/F sensors 1. The ECM calculates the necessary compensation to correct the offset between the actual and the theoretical ratios.
In case the amount of the compensation value is extremely large (The actual mixture ratio is too lean.), the ECM judges the condition as the fuel injection system malfunction and lights up the MIL (2 trip detection logic).

Sensor	Input signal to ECM	ECM function	Actuator
A/F sensors 1	Density of oxygen in exhaust gas (Mixture ratio feedback signal)	Fuel injection control	Fuel injector

DTC No.	Trouble diagnosis name	DTC detecting condition	Possible cause
P0171 0171 (Bank 1)	Fuel injection system too lean	• Fuel injection system does not operate properly. • The amount of mixture ratio compensation is too large. (The mixture ratio is too lean.)	• Intake air leaks • A/F sensor 1 • Fuel injector • Exhaust gas leaks • Incorrect fuel pressure • Lack of fuel • Mass air flow sensor • Incorrect PCV hose connection
P0174 0174 (Bank 2)			

DTC Confirmation Procedure

INFOID:0000000001717372

NOTE:
If DTC Confirmation Procedure has been previously conducted, always perform the following before conducting the next step.
1. Turn ignition switch OFF and wait at least 10 seconds.
2. Turn ignition switch ON.
3. Turn ignition switch OFF and wait at least 10 seconds.

WITH CONSULT-III

1. Start engine and warm it up to normal operating temperature.
2. Turn ignition switch OFF and wait at least 10 seconds.
3. Turn ignition switch ON.
4. Turn ignition switch OFF and wait at least 10 seconds.
5. Turn ignition switch ON and select “SELF-LEARNING CONT” in “WORK SUPPORT” mode with CONSULT-III.
6. Clear the self-learning control coefficient by touching “CLEAR”.
7. Select “DATA MONITOR” mode with CONSULT-III.
8. Start engine again and let it idle for at least 10 minutes.
   The 1st trip DTC P0171 or P0174 should be detected at this stage, if a malfunction exists. If so, go to EC-276, "Diagnosis Procedure".
   NOTE:
   If 1st trip DTC is not detected during above procedure, performing the following procedure is advised.

a. Turn ignition switch OFF and wait at least 10 seconds.
b. Start engine and drive the vehicle under the similar conditions to (1st trip) Freeze Frame Data for 10 minutes. Refer to the table below.
   Hold the accelerator pedal as steady as possible.

   The similar conditions to (1st trip) Freeze Frame Data means the vehicle operation that the following conditions should be satisfied at the same time.

Engine speed	Engine speed in the freeze frame data ± 400 rpm
Vehicle speed	Vehicle speed in the freeze frame data ± 10 km/h (6 MPH)

Engine coolant temperature (T) condition	When the freeze frame data shows lower than 70 °C (158 °F), T should be lower than 70 °C (158 °F).
	When the freeze frame data shows higher than or equal to 70 °C (158 °F), T should be higher than or equal to 70 °C (158 °F).

9. If it is difficult to start engine at step 6, the fuel injection system has a malfunction, too.
10. Crank engine while depressing accelerator pedal. If engine starts, go to EC-276, "Diagnosis Procedure". If engine does not start, check exhaust and intake air leak visually.

WITH GST

1. Start engine and warm it up to normal operating temperature.
2. Turn ignition switch OFF and wait at least 10 seconds.
3. Turn ignition switch ON.
4. Turn ignition switch OFF and wait at least 10 seconds.
5. Disconnect mass air flow sensor harness connector.
6. Restart engine and let it idle for at least 5 seconds.
7. Stop engine and reconnect mass air flow sensor harness connector.
8. Select Service $03 with GST. Make sure DTC P0102 is detected.
9. Select Service $04 with GST and erase the DTC P0102.
10. Start engine again and let it idle for at least 10 minutes.
11. Select Service $07 with GST. The 1st trip DTC P0171 or P0174 should be detected at this stage, if a malfunction exists. If so, go to EC-276, "Diagnosis Procedure".
    NOTE:
    If 1st trip DTC is not detected during above procedure, performing the following procedure is advised.

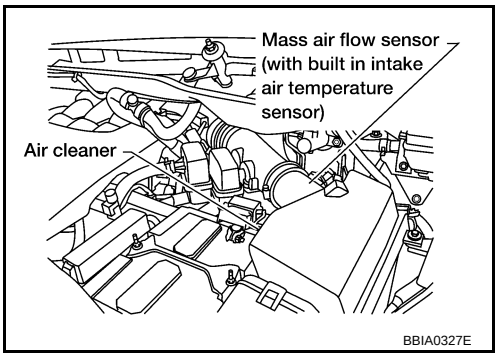

a. Turn ignition switch OFF and wait at least 10 seconds.
b. Start engine and drive the vehicle under the similar conditions to (1st trip) Freeze Frame Data for 10 minutes. Refer to the table below.
   Hold the accelerator pedal as steady as possible.

   The similar conditions to (1st trip) Freeze Frame Data means the vehicle operation that the following conditions should be satisfied at the same time.

Engine speed	Engine speed in the freeze frame data ± 400 rpm
Vehicle speed	Vehicle speed in the freeze frame data ± 10 km/h (6 MPH)
Engine coolant temperature (T) condition	When the freeze frame data shows lower than 70 °C (158 °F), T should be lower than 70 °C (158 °F).
	When the freeze frame data shows higher than or equal to 70 °C (158 °F), T should be higher than or equal to 70 °C (158 °F).

12. If it is difficult to start engine at step 8, the fuel injection system has a malfunction.
13. Crank engine while depressing accelerator pedal. If engine starts, go to EC-276, "Diagnosis Procedure". If engine does not start, check exhaust and intake air leak visually.

Wiring Diagram

INFOID:0000000001717373

BANK 1

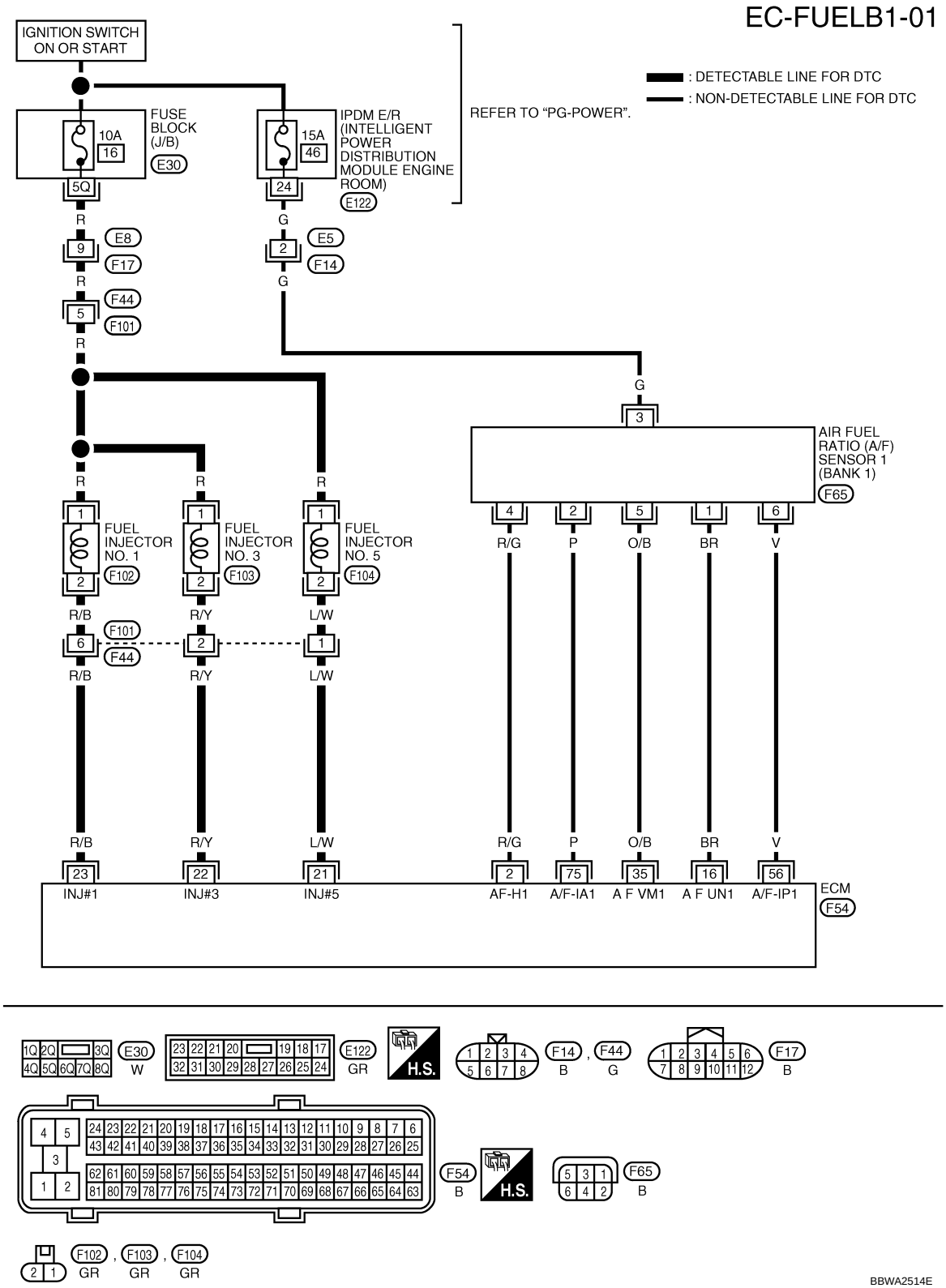

Specification data are reference values and are measured between each terminal and ground.
Pulse signal is measured by CONSULT-III.

CAUTION:

Do not use ECM ground terminals when measuring input/output voltage. Doing so may result in damage to the ECM's transistor. Use a ground other than ECM terminals, such as the ground.

TERMINAL NO.	WIRE COLOR	ITEM	CONDITION	DATA (DC Voltage)
2	R/G	A/F sensor 1 heater (Bank 1)	**[Engine is running]** • **Warm-up condition** • Idle speed	Approximately 5V★ 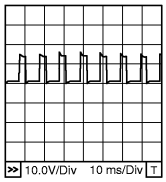 PBIB1584E
16	BR	A/F sensor 1 (Bank 1)	**[Engine is running]** • **Warm-up condition** • Idle speed	Approximately 3.1V
35	O/B			Approximately 2.6V
56	V			Approximately 2.3V
75	P			Approximately 2.3V
21 22 23	L/W R/Y R/B	Fuel injector No. 5 Fuel injector No. 3 Fuel injector No. 1	**[Engine is running]** • **Warm-up condition** • Idle speed **NOTE:** The pulse cycle changes depending on rpm at idle	BATTERY VOLTAGE (11 - 14V)★ 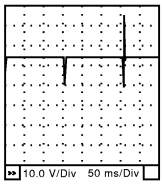 SEC984C
			[Engine is running] • **Warm-up condition** • Engine speed: 2,000 rpm	BATTERY VOLTAGE (11 - 14V)★ 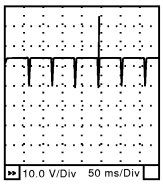 SEC985C

★: Average voltage for pulse signal (Actual pulse signal can be confirmed by oscilloscope.)

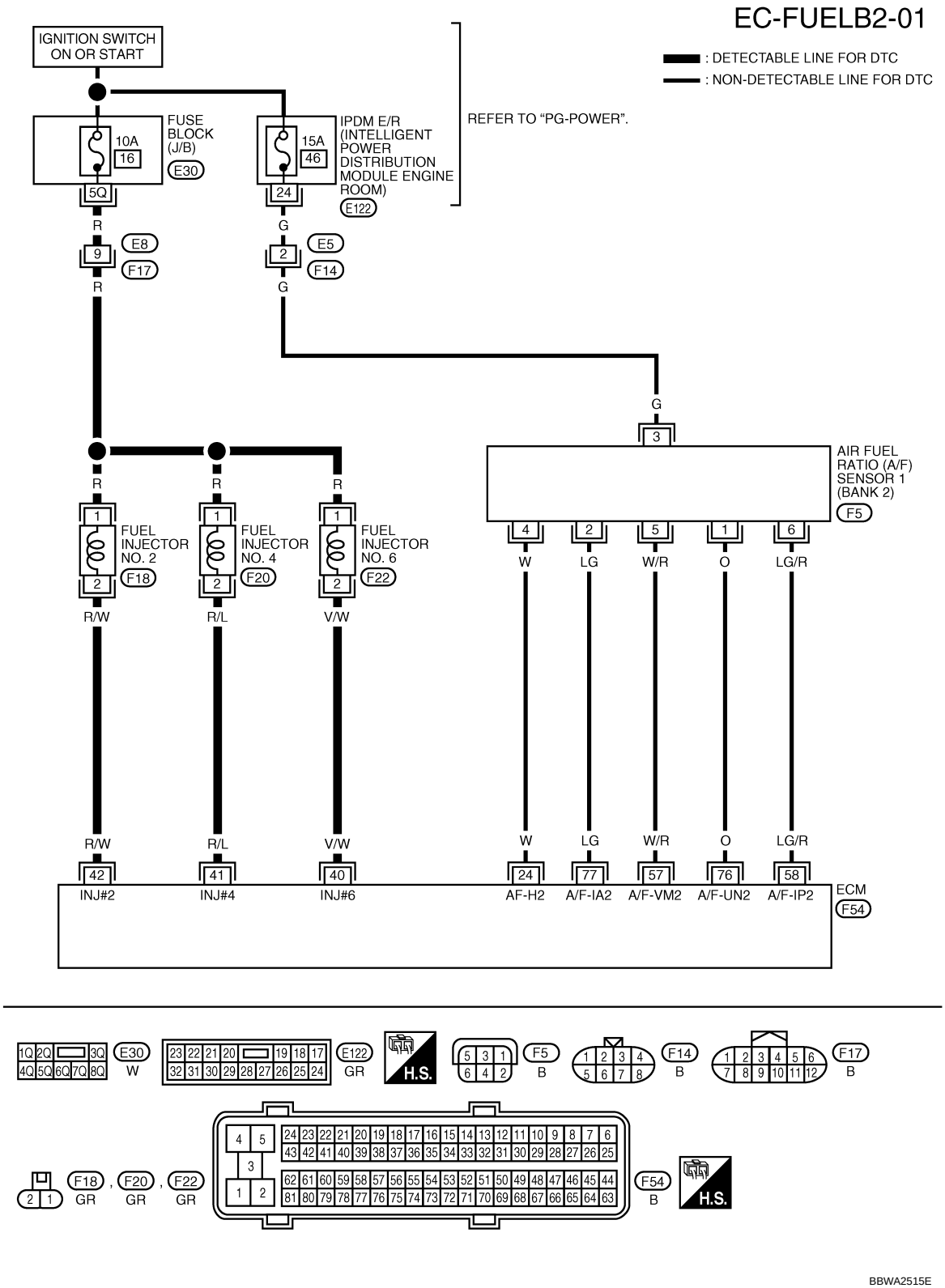

Specification data are reference values and are measured between each terminal and ground.
Pulse signal is measured by CONSULT-III.

CAUTION:

Do not use ECM ground terminals when measuring input/output voltage. Doing so may result in damage to the ECM's transistor. Use a ground other than ECM terminals, such as the ground.

TERMINAL NO.	WIRE COLOR	ITEM	CONDITION	DATA (DC Voltage)
24	W	A/F sensor 1 heater (Bank 2)	**[Engine is running]** • **Warm-up condition** • Idle speed	Approximately 5V★ 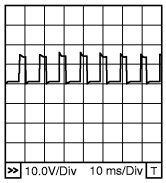 PBIB1584E
40 41 42	V/W R/L R/W	Fuel injector No. 6 Fuel injector No. 4 Fuel injector No. 2	**[Engine is running]** • **Warm-up condition** • Idle speed **NOTE:** The pulse cycle changes depending on rpm at idle	BATTERY VOLTAGE (11 - 14V)★ 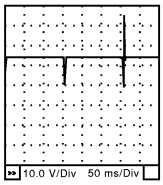 SEC984C
			[Engine is running] • **Warm-up condition** • Engine speed: 2,000 rpm	BATTERY VOLTAGE (11 - 14V)★ 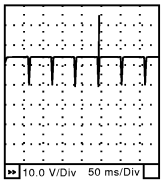 SEC985C
57	W/R	A/F sensor 1 (Bank 2)	**[Engine is running]** • **Warm-up condition** • Idle speed	Approximately 2.6V
58	LG/R			Approximately 2.3V
76	O			Approximately 3.1V
77	LG			Approximately 2.3V

★: Average voltage for pulse signal (Actual pulse signal can be confirmed by oscilloscope.)

Diagnosis Procedure

INFOID:0000000001717374

1. CHECK EXHAUST GAS LEAK

1. Start engine and run it at idle.
2. Listen for an exhaust gas leak before three way catalyst (manifold).

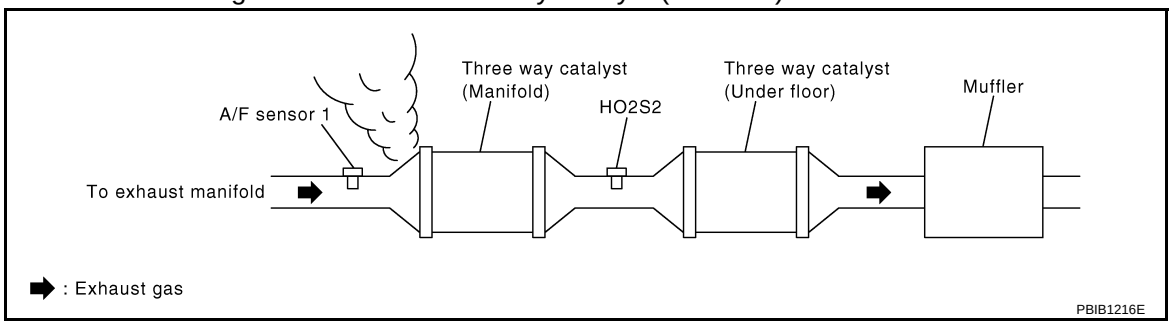

OK or NG

OK >> GO TO 2.
NG >> Repair or replace.

2. CHECK FOR INTAKE AIR LEAK

1. Listen for an intake air leak after the mass air flow sensor.

2. Check PCV hose connection.

OK or NG

OK >> GO TO 3.
NG >> Repair or replace.

3. CHECK A/F SENSOR 1 INPUT SIGNAL CIRCUIT

1. Turn ignition switch OFF.
2. Disconnect corresponding A/F sensor 1 harness connector.

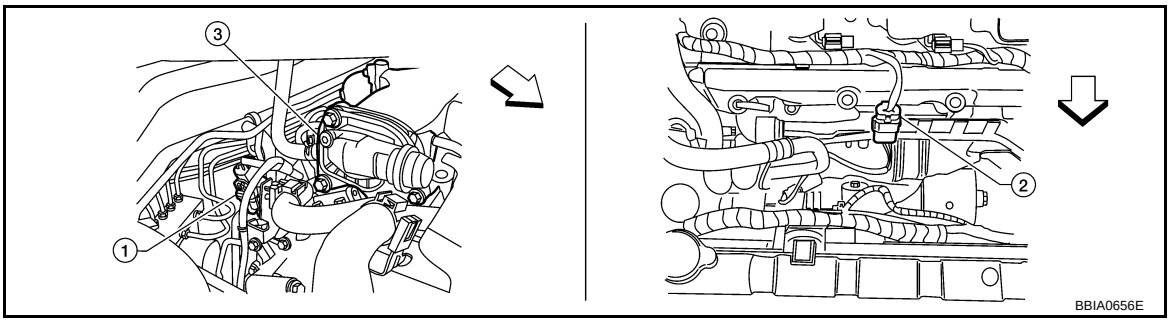

⇦: Vehicle front

1. Air fuel ratio (A/F) sensor 1 (bank 1) harness connector
2. Air fuel ratio (A/F) sensor 1 (bank 2) harness connector
3. Intake manifold collector

3. Disconnect ECM harness connector.
4. Check harness continuity between the following terminals.
   Refer to Wiring Diagram.

	A/F sensor 1 terminal	ECM terminal
Bank 1	1	16
	2	75
	5	35
	6	56
Bank 2	1	76
	2	77
	5	57
	6	58

Continuity should exist.

5. Check harness continuity between the following terminals and ground.
   Refer to Wiring Diagram.

Bank 1		Bank 2	
A/F sensor 1 terminal	ECM terminal	A/F sensor 1 terminal	ECM terminal
1	16	1	76
2	75	2	77
5	35	5	57
6	56	6	58

Continuity should not exist.

6. Also check harness for short to power.

OK or NG

OK >> GO TO 4.

NG >> Repair open circuit or short to ground or short to power in harness or connectors.

4. CHECK FUEL PRESSURE

1. Release fuel pressure to zero. Refer to EC-75, "Fuel Pressure Check".
2. Install fuel pressure gauge and check fuel pressure. Refer to EC-75, "Fuel Pressure Check".

At idling: Approximately 350 kPa (3.57 kg/cm^2, 51 psi)

OK or NG

OK (With CONSULT-III)>>GO TO 6.
OK (Without CONSULT-III)>>GO TO 7.
NG >> GO TO 5.

5. DETECT MALFUNCTIONING PART

Check the following.
- Fuel pump and circuit (Refer to EC-585.)
- Fuel pressure regulator (Refer to EC-75, "Fuel Pressure Check".)
- Fuel lines
- Fuel filter for clogging

>> Repair or replace.

6. CHECK MASS AIR FLOW SENSOR

With CONSULT-III
1. Install all removed parts.
2. Check “MASS AIR FLOW” in “DATA MONITOR” mode with CONSULT-III.

2.0 - 6.0 g·m/sec: at idling
7.0 - 20.0 g·m/sec: at 2,500 rpm

OK or NG

OK >> GO TO 8.
NG >> Check connectors for rusted terminals or loose connections in the mass air flow sensor circuit or ground. Refer to EC-168.

7. CHECK MASS AIR FLOW SENSOR

With GST
1. Install all removed parts.
2. Check mass air flow sensor signal in Service $01 with GST.

2.0 - 6.0 g·m/sec: at idling
7.0 - 20.0 g·m/sec: at 2,500 rpm

OK or NG

OK (P0171)>>GO TO 9.
OK (P0174)>>GO TO 11.
NG >> Check connectors for rusted terminals or loose connections in the mass air flow sensor circuit or ground. Refer to EC-168.

8. CHECK FUNCTION OF FUEL INJECTOR

With CONSULT-III
1. Start engine.
2. Perform “POWER BALANCE” in “ACTIVE TEST” mode with CONSULT-III.
3. Make sure that each circuit produces a momentary engine speed drop.

OK or NG

OK >> GO TO 12.
NG >> Perform trouble diagnosis for FUEL INJECTOR, refer to EC-579.

9. CHECK FUNCTION OF FUEL INJECTOR-I

Without CONSULT-III

1. Stop engine.
2. Disconnect harness connector F44 (2), F101 (3)
3. Turn ignition switch ON.

- ⇦:Vehicle front
- Intake manifold collector (1)

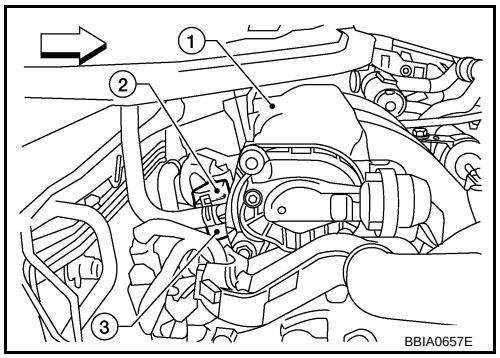

4. Check voltage between harness connector F44 terminal 5 and ground with CONSULT-III or tester.

Voltage: Battery voltage

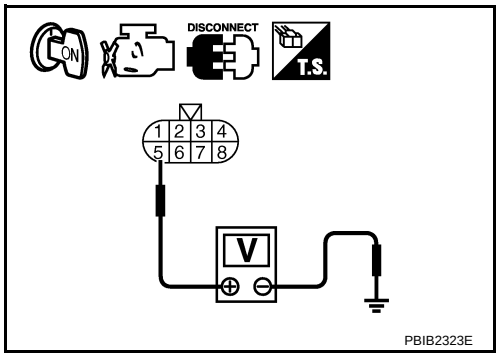

5. Turn ignition switch OFF.
6. Disconnect ECM harness connector.
7. Check harness continuity between harness connector F44 terminal and ECM terminal as follows.
   Refer to Wiring Diagram.

Cylinder	Harness connector F44 terminal	ECM terminal
1	6	23
3	2	22
5	1	21

Continuity should exist.

8. Also check harness for short to ground and short to power.

OK or NG

OK >> GO TO 10.
NG >> Perform trouble diagnosis for FUEL INJECTOR, refer to EC-579.

10. CHECK FUNCTION OF FUEL INJECTOR-II

Provide battery voltage between harness connector F101 as follows and then interrupt it. Listen to each fuel injector operating sound.

Cylinder	Harness connector F101 terminal	
	(+)	(–)
1	5	6
3	5	2
5	5	1

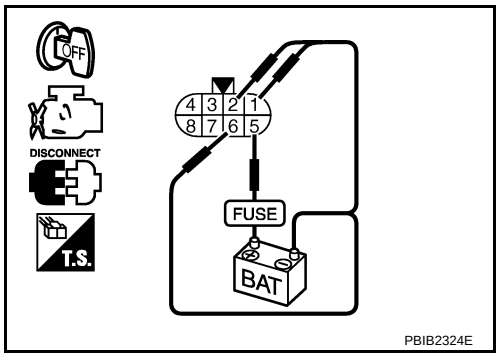

Operating sound should exist.

OK or NG

OK >> GO TO 12.
NG >> Perform trouble diagnosis for FUEL INJECTOR, refer to EC-579.

11. CHECK FUNCTION OF FUEL INJECTOR

1. Start engine.
2. Listen to fuel injectors No.2, No.4, No.6 operating sound.

Clicking noise should exist.

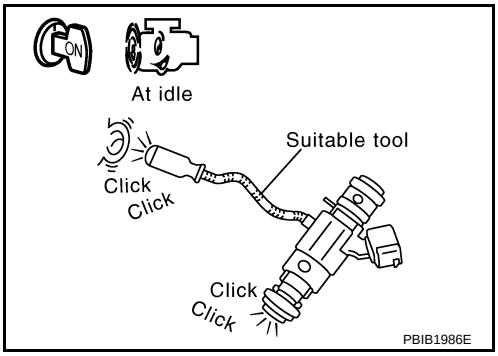

OK or NG

OK >> GO TO 12.
NG >> Perform trouble diagnosis for FUEL INJECTOR, refer to EC-579.

12. CHECK FUEL INJECTOR

1. Confirm that the engine is cooled down and there are no fire hazards near the vehicle.
2. Turn ignition switch OFF.
3. Reconnect all harness connectors disconnected.
4. Disconnect all fuel injector harness connectors.
5. Remove fuel tube assembly. Refer to EM-38.
   Keep fuel hose and all fuel injectors connected to fuel tube.
6. For DTC P0171, reconnect fuel injector harness connectors on bank 1.
   For DTC P0174, reconnect fuel injector harness connectors on bank 2.
7. Disconnect all ignition coil harness connectors.
8. Prepare pans or saucers under each fuel injector.
9. Crank engine for about 3 seconds.
   For DTC P0171, make sure that fuel sprays out from fuel injectors on bank 1.
   For DTC P0174, make sure that fuel sprays out from fuel injectors on bank 2.

Fuel should be sprayed evenly for each fuel injector.

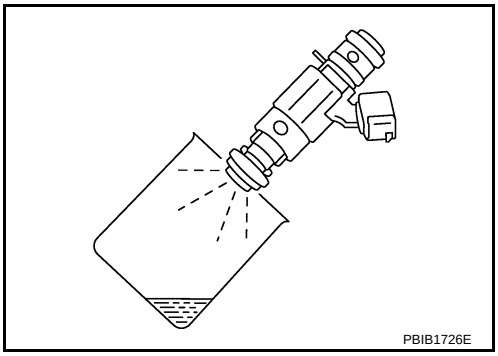

OK or NG

OK >> GO TO 13.
NG >> Replace fuel injectors from which fuel does not spray out. Always replace O-ring with new ones.

13. CHECK INTERMITTENT INCIDENT

Refer to EC-130.

>> **INSPECTION END**

DTC P0172, P0175 FUEL INJECTION SYSTEM FUNCTION

On Board Diagnosis Logic

INFOID:0000000001717375

With the Air/Fuel Mixture Ratio Self-Learning Control, the actual mixture ratio can be brought closely to the theoretical mixture ratio based on the mixture ratio feedback signal from the A/F sensors 1. The ECM calculates the necessary compensation to correct the offset between the actual and the theoretical ratios.
In case the amount of the compensation value is extremely large (The actual mixture ratio is too rich.), the ECM judges the condition as the fuel injection system malfunction and lights up the MIL (2 trip detection logic).

Sensor	Input signal to ECM	ECM function	Actuator
A/F sensors 1	Density of oxygen in exhaust gas (Mixture ratio feedback signal)	Fuel injection control	Fuel injector

DTC No.	Trouble diagnosis name	DTC detecting condition	Possible cause
P0172 0172 (Bank 1)	Fuel injection system too rich	• Fuel injection system does not operate properly. • The amount of mixture ratio compensation is too large. (The mixture ratio is too rich.)	• A/F sensor 1 • Fuel injector • Exhaust gas leaks • Incorrect fuel pressure • Mass air flow sensor
P0175 0175 (Bank 2)			

DTC Confirmation Procedure

INFOID:0000000001717376

NOTE:
If DTC Confirmation Procedure has been previously conducted, always perform the following before conducting the next step.
1. Turn ignition switch OFF and wait at least 10 seconds.
2. Turn ignition switch ON.
3. Turn ignition switch OFF and wait at least 10 seconds.

WITH CONSULT-III

1. Start engine and warm it up to normal operating temperature.
2. Turn ignition switch OFF and wait at least 10 seconds.
3. Turn ignition switch ON.
4. Turn ignition switch OFF and wait at least 10 seconds.
5. Turn ignition switch ON and select “SELF-LEARNING CONT” in “WORK SUPPORT” mode with CONSULT-III.
6. Clear the self-learning control coefficient by touching “CLEAR”.
7. Select “DATA MONITOR” mode with CONSULT-III.
8. Start engine again and let it idle for at least 10 minutes.
   The 1st trip DTC P0172, P0175 should be detected at this stage, if a malfunction exists. If so, go to EC-286, "Diagnosis Procedure".
   NOTE:
   If 1st trip DTC is not detected during above procedure, performing the following procedure is advised.

a. Turn ignition switch OFF and wait at least 10 seconds.
b. Start engine and drive the vehicle under the similar conditions to (1st trip) Freeze Frame Data for 10 minutes. Refer to the table below.
   Hold the accelerator pedal as steady as possible.

   The similar conditions to (1st trip) Freeze Frame Data means the vehicle operation that the following conditions should be satisfied at the same time.

Engine speed	Engine speed in the freeze frame data ± 400 rpm
Vehicle speed	Vehicle speed in the freeze frame data ± 10 km/h (6 MPH)

Engine coolant temperature (T) condition	When the freeze frame data shows lower than 70 °C (158 °F), T should be lower than 70 °C (158 °F).
	When the freeze frame data shows higher than or equal to 70 °C (158 °F), T should be higher than or equal to 70 °C (158 °F).

9. If it is difficult to start engine at step 6, the fuel injection system has a malfunction, too.
10. Crank engine while depressing accelerator pedal.
    If engine starts, go to EC-286, "Diagnosis Procedure". If engine does not start, remove spark plugs and check for fouling, etc.

WITH GST

1. Start engine and warm it up to normal operating temperature.
2. Turn ignition switch OFF and wait at least 10 seconds.
3. Turn ignition switch ON.
4. Turn ignition switch OFF and wait at least 10 seconds.
5. Disconnect mass air flow sensor harness connector. Then restart and run engine for at least 5 seconds at idle speed.
6. Stop engine and reconnect mass air flow sensor harness connector.
7. Select Service $03 with GST. Make sure DTC P0102 is detected.
8. Select Service $04 with GST and erase the DTC P0102.
9. Start engine again and let it idle for at least 10 minutes.
10. Select Service $07 with GST. The 1st trip DTC P0172 or P0175 should be detected at this stage, if a malfunction exists. If so, go to EC-286, "Diagnosis Procedure".
    NOTE:
    If 1st trip DTC is not detected during above procedure, performing the following procedure is advised.

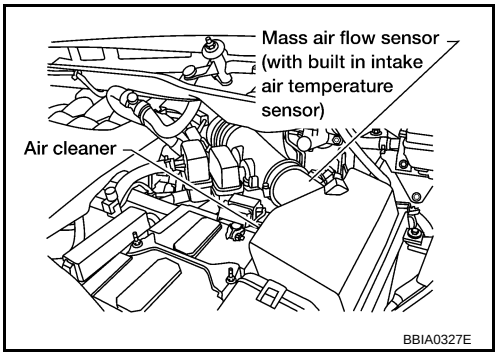

a. Turn ignition switch OFF and wait at least 10 seconds.
b. Start engine and drive the vehicle under the similar conditions to (1st trip) Freeze Frame Data for 10 minutes. Refer to the table below.
   Hold the accelerator pedal as steady as possible.

   The similar conditions to (1st trip) Freeze Frame Data means the vehicle operation that the following conditions should be satisfied at the same time.

Engine speed	Engine speed in the freeze frame data ± 400 rpm
Vehicle speed	Vehicle speed in the freeze frame data ± 10 km/h (6 MPH)
Engine coolant temperature (T) condition	When the freeze frame data shows lower than 70 °C (158 °F), T should be lower than 70 °C (158 °F).
	When the freeze frame data shows higher than or equal to 70 °C (158 °F), T should be higher than or equal to 70 °C (158 °F).

11. If it is difficult to start engine at step 7, the fuel injection system has a malfunction.
12. Crank engine while depressing accelerator pedal.
    If engine starts, go to EC-286, "Diagnosis Procedure". If engine does not start, remove spark plugs and check for fouling, etc.

Wiring Diagram

INFOID:0000000001717377

BANK 1

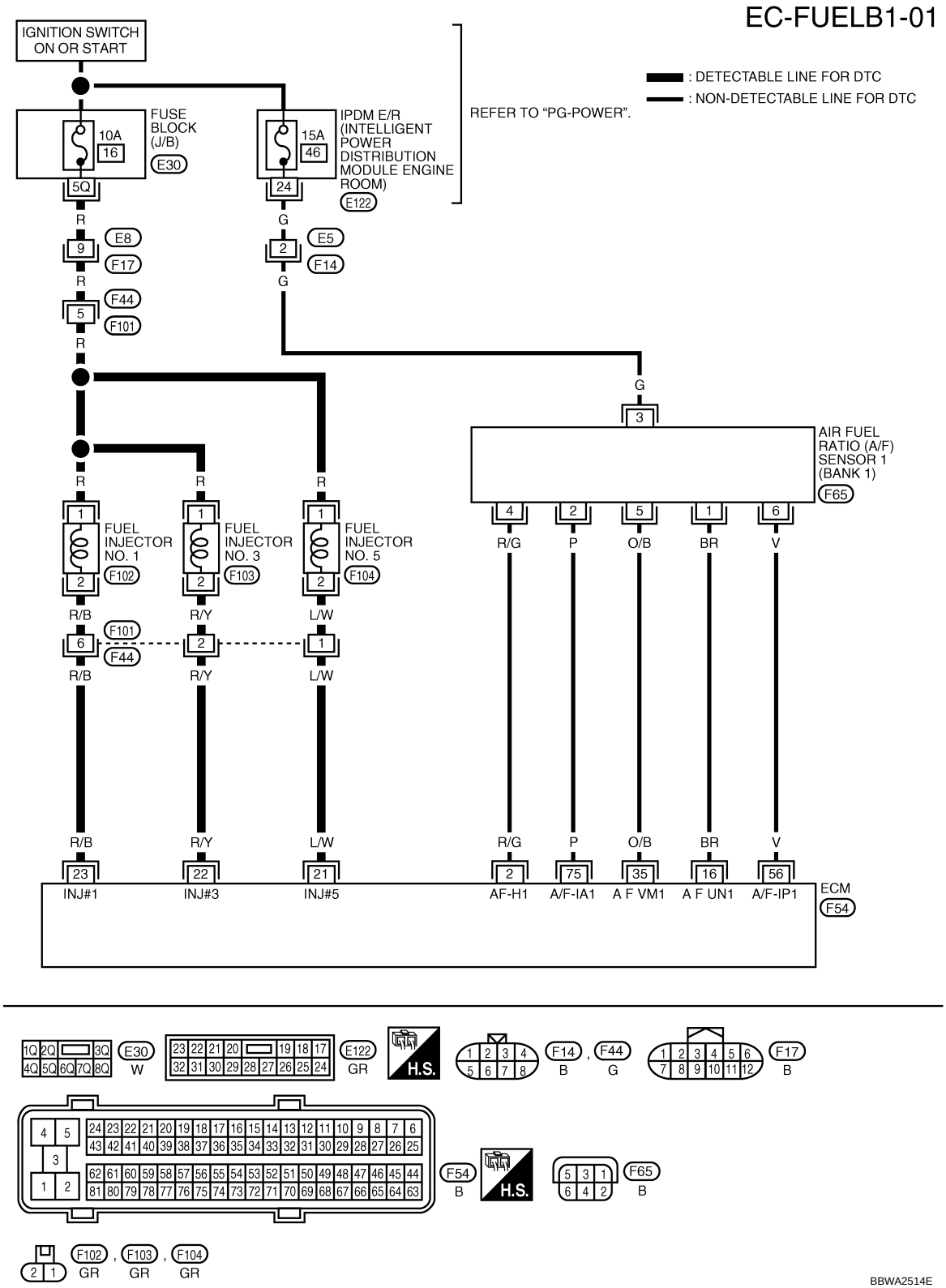

Specification data are reference values and are measured between each terminal and ground.
Pulse signal is measured by CONSULT-III.

CAUTION:

Do not use ECM ground terminals when measuring input/output voltage. Doing so may result in damage to the ECM's transistor. Use a ground other than ECM terminals, such as the ground.

TERMINAL NO.	WIRE COLOR	ITEM	CONDITION	DATA (DC Voltage)
2	R/G	A/F sensor 1 heater (Bank 1)	**[Engine is running]** • **Warm-up condition** • Idle speed	Approximately 5V★ 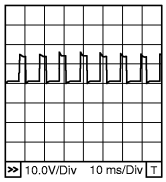 PBIB1584E
16	BR	A/F sensor 1 (Bank 1)	**[Engine is running]** • **Warm-up condition** • Idle speed	Approximately 3.1V
35	O/B			Approximately 2.6V
56	V			Approximately 2.3V
75	P			Approximately 2.3V
21 22 23	L/W R/Y R/B	Fuel injector No. 5 Fuel injector No. 3 Fuel injector No. 1	**[Engine is running]** • **Warm-up condition** • Idle speed **NOTE:** The pulse cycle changes depending on rpm at idle	BATTERY VOLTAGE (11 - 14V)★ 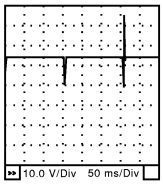 SEC984C
			[Engine is running] • **Warm-up condition** • Engine speed: 2,000 rpm	BATTERY VOLTAGE (11 - 14V)★ 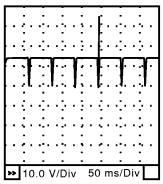 SEC985C

★: Average voltage for pulse signal (Actual pulse signal can be confirmed by oscilloscope.)

BANK 2

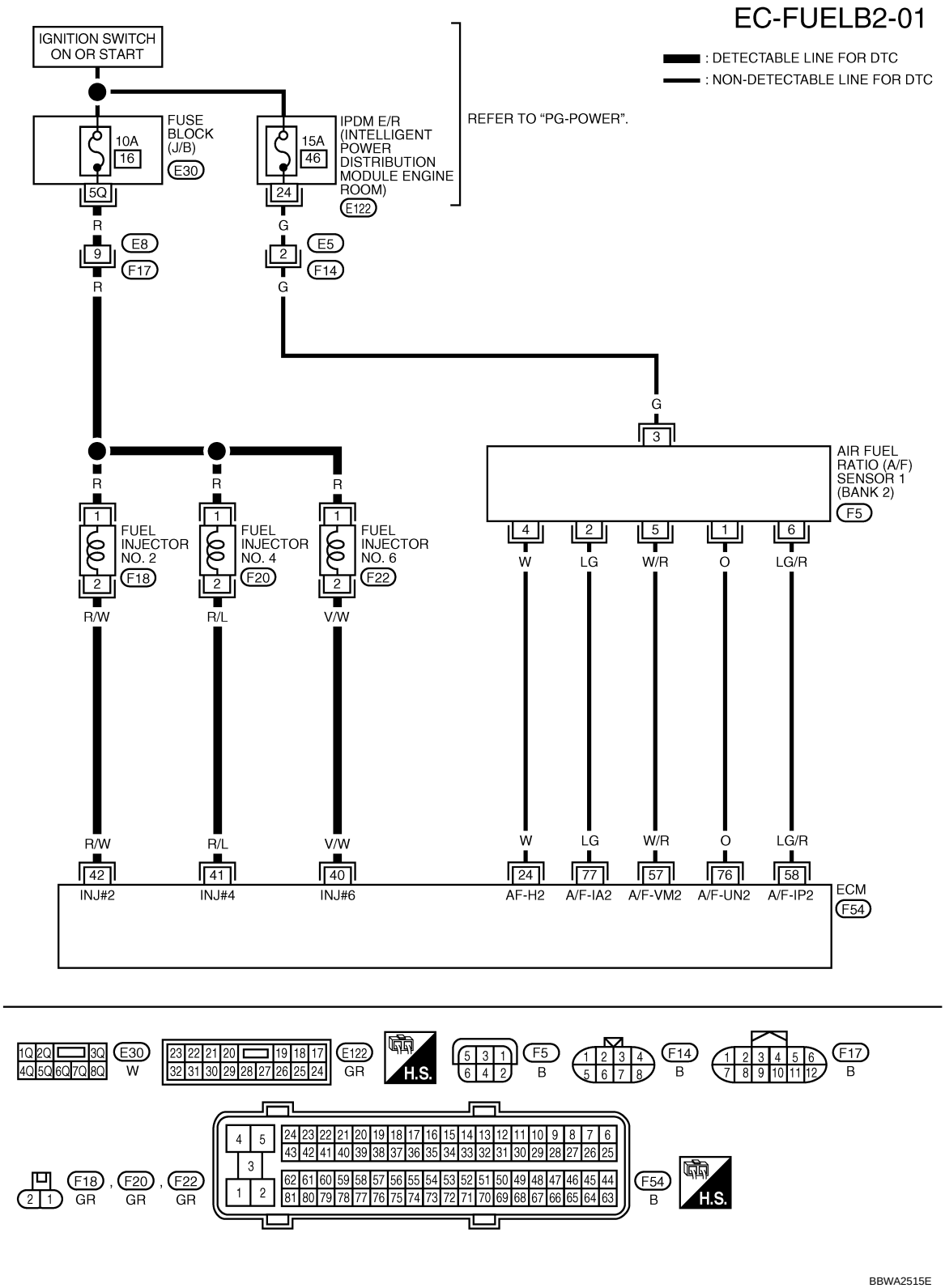

Specification data are reference values and are measured between each terminal and ground.
Pulse signal is measured by CONSULT-III.

CAUTION:

Do not use ECM ground terminals when measuring input/output voltage. Doing so may result in damage to the ECM's transistor. Use a ground other than ECM terminals, such as the ground.

TERMINAL NO.	WIRE COLOR	ITEM	CONDITION	DATA (DC Voltage)
24	W	A/F sensor 1 heater (Bank 2)	**[Engine is running]** • **Warm-up condition** • Idle speed	Approximately 5V★ 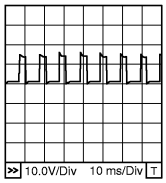 PBIB1584E
40 41 42	V/W R/L R/W	Fuel injector No. 6 Fuel injector No. 4 Fuel injector No. 2	**[Engine is running]** • **Warm-up condition** • Idle speed **NOTE:** The pulse cycle changes depending on rpm at idle	BATTERY VOLTAGE (11 - 14V)★ 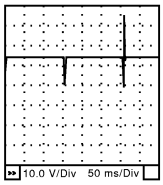 SEC984C
			[Engine is running] • **Warm-up condition** • Engine speed: 2,000 rpm	BATTERY VOLTAGE (11 - 14V)★ 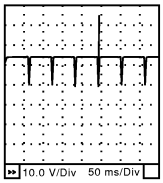 SEC985C
57	W/R	A/F sensor 1 (Bank 2)	**[Engine is running]** • **Warm-up condition** • Idle speed	Approximately 2.6V
58	LG/R			Approximately 2.3V
76	O			Approximately 3.1V
77	LG			Approximately 2.3V

★: Average voltage for pulse signal (Actual pulse signal can be confirmed by oscilloscope.)

Diagnosis Procedure

INFOID:0000000001717378

1. CHECK EXHAUST GAS LEAK

1. Start engine and run it at idle.
2. Listen for an exhaust gas leak before three way catalyst (manifold).

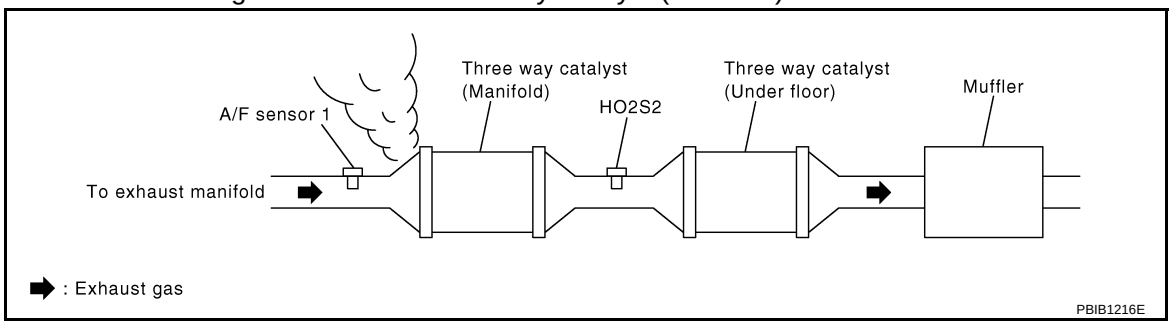

OK or NG

OK >> GO TO 2.
NG >> Repair or replace.

2. CHECK FOR INTAKE AIR LEAK

Listen for an intake air leak after the mass air flow sensor.

OK or NG

OK >> GO TO 3.
NG >> Repair or replace.

3. CHECK A/F SENSOR 1 INPUT SIGNAL CIRCUIT

1. Turn ignition switch OFF.
2. Disconnect corresponding A/F sensor 1 harness connector.

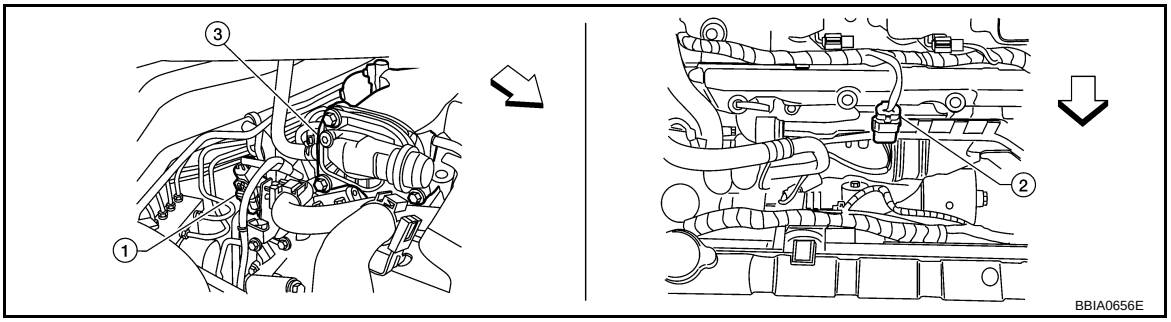

⇦: Vehicle front

1. Air fuel ratio (A/F) sensor 1 (bank 1) harness connector
2. Air fuel ratio (A/F) sensor 1 (bank 2) harness connector
3. Intake manifold collector

3. Disconnect ECM harness connector.
4. Check harness continuity between the following terminals.
   Refer to Wiring Diagram.

	A/F sensor 1 terminal	ECM terminal
Bank 1	1	16
	2	75
	5	35
	6	56
Bank 2	1	76
	2	77
	5	57
	6	58

Continuity should exist.

5. Check harness continuity between the following terminals and ground.
   Refer to Wiring Diagram.

Bank 1		Bank 2	
A/F sensor 1 terminal	ECM terminal	A/F sensor 1 terminal	ECM terminal
1	16	1	76
2	75	2	77
5	35	5	57
6	56	6	58

Continuity should not exist.

6. Also check harness for short to power.

OK or NG

OK >> GO TO 4.
NG >> Repair open circuit or short to ground or short to power in harness or connectors.

4. CHECK FUEL PRESSURE

1. Release fuel pressure to zero. Refer to EC-75, "Fuel Pressure Check".
2. Install fuel pressure gauge and check fuel pressure. Refer to EC-75, "Fuel Pressure Check".

At idling: Approximately 350 kPa (3.57 kg/cm^2, 51 psi)

OK or NG

OK (With CONSULT-III)>>GO TO 6.
OK (Without CONSULT-III)>>GO TO 7.
NG >> GO TO 5.

5. DETECT MALFUNCTIONING PART

Check the following.
- Fuel pump and circuit (Refer to, EC-585.)
- Fuel pressure regulator (Refer to EC-75, "Fuel Pressure Check".)

>> Repair or replace.

6. CHECK MASS AIR FLOW SENSOR

With CONSULT-III
1. Install all removed parts.
2. Check “MASS AIR FLOW” in “DATA MONITOR” mode with CONSULT-III.

2.0 - 6.0 g·m/sec: at idling
7.0 - 20.0 g·m/sec: at 2,500 rpm

OK or NG

OK >> GO TO 8.
NG >> Check connectors for rusted terminals or loose connections in the mass air flow sensor circuit or ground. Refer to EC-168.

7. CHECK MASS AIR FLOW SENSOR

With GST
1. Install all removed parts.
2. Check mass air flow sensor signal in Service $01 with GST.

2.0 - 6.0 g·m/sec: at idling
7.0 - 20.0 g·m/sec: at 2,500 rpm

OK or NG

OK (P0172)>>GO TO 9.
OK (P0175)>>GO TO 11.
NG >> Check connectors for rusted terminals or loose connections in the mass air flow sensor circuit or ground. Refer to EC-168.

8. CHECK FUNCTION OF FUEL INJECTOR

With CONSULT-III
1. Start engine.
2. Perform “POWER BALANCE” in “ACTIVE TEST” mode with CONSULT-III.
3. Make sure that each circuit produces a momentary engine speed drop.

OK or NG

OK >> GO TO 12.
NG >> Perform trouble diagnosis for FUEL INJECTOR, refer to EC-579.

9. CHECK FUNCTION OF FUEL INJECTOR-I

Without CONSULT-III

1. Stop engine.
2. Disconnect harness connector F44 (2), F101 (3)
3. Turn ignition switch ON.

- ⇦: Vehicle front
- Intake manifold collector (1)

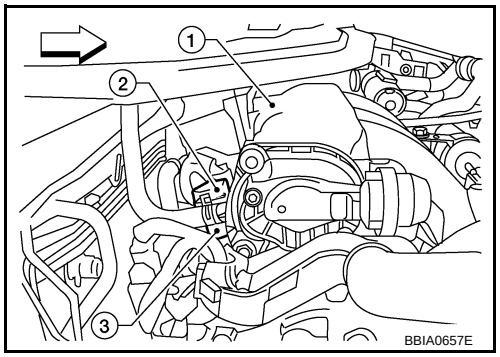

4. Check voltage between harness connector F44 terminal 5 and ground with CONSULT-III or tester.

Voltage: Battery voltage

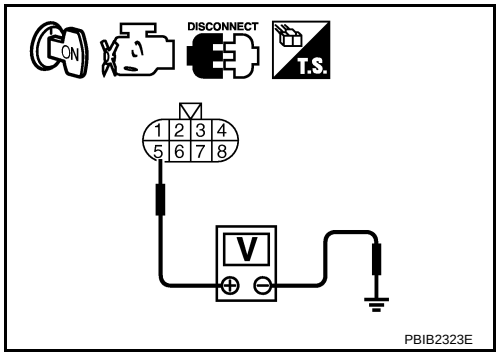

5. Turn ignition switch OFF.
6. Disconnect ECM harness connector.
7. Check harness continuity between harness connector F44 terminal and ECM terminal as follows.
   Refer to Wiring Diagram.

Cylinder	Harness connector F44 terminal	ECM terminal
1	6	23
3	2	22
5	1	21

Continuity should exist.

8. Also check harness for short to ground and short to power.

OK or NG

OK >> GO TO 10.
NG >> Perform trouble diagnosis for FUEL INJECTOR, refer to EC-579.

10. CHECK FUNCTION OF FUEL INJECTOR-II

Provide battery voltage between harness connector F101 as follows and then interrupt it. Listen to each fuel injector operating sound.

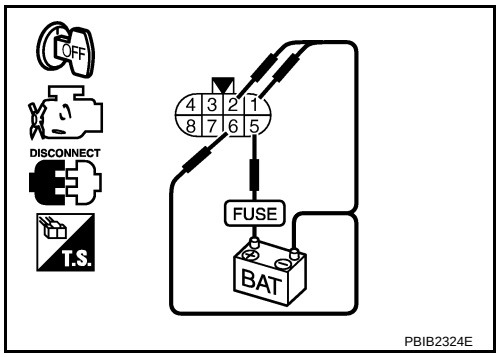

Cylinder	Harness connector F101 terminal	
	(+)	(–)
1	5	6
3	5	2
5	5	1

Operating sound should exist.

OK or NG

OK >> GO TO 12.
NG >> Perform trouble diagnosis for FUEL INJECTOR, refer to EC-579.

11. CHECK FUNCTION OF FUEL INJECTOR

1. Start engine.
2. Listen to fuel injectors No.2, No.4, No.6 operating sound.

Clicking noise should exist.

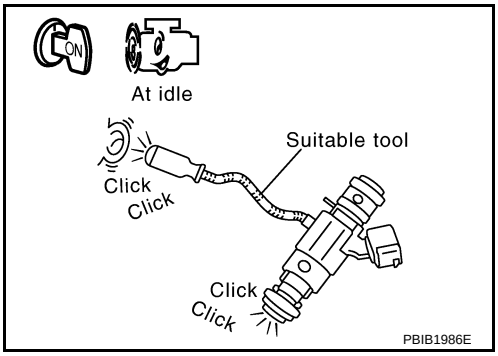

OK or NG

OK >> GO TO 12.
NG >> Perform trouble diagnosis for FUEL INJECTOR, refer to EC-579.

12. CHECK FUEL INJECTOR

1. Remove fuel injector assembly. Refer to EM-38.
   Keep fuel hose and all fuel injectors connected to fuel tube.
2. Confirm that the engine is cooled down and there are no fire hazards near the vehicle.
3. Reconnect all harness connectors disconnected
4. Disconnect all fuel injector harness connectors.
5. Disconnect all ignition coil harness connectors.
6. Prepare pans or saucers under each fuel injectors.
7. Crank engine for about 3 seconds.
   Make sure fuel does not drip from fuel injector.

OK or NG

OK (Does not drip.)>>GO TO 13.
NG (Drips.)>>Replace the fuel injectors from which fuel is dripping. Always replace O-ring with new one.

13. CHECK INTERMITTENT INCIDENT

Refer to EC-130.

>> **INSPECTION END**

DTC P0181 FTT SENSOR

Component Description

INFOID:0000000001717379

The fuel tank temperature sensor is used to detect the fuel temperature inside the fuel tank. The sensor modifies a voltage signal from the ECM. The modified signal returns to the ECM as the fuel temperature input. The sensor uses a thermistor which is sensitive to the change in temperature. The electrical resistance of the thermistor decreases as temperature increases.

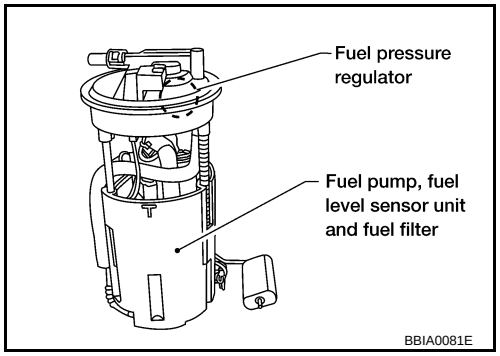

<Reference data>

Fluid temperature °C (°F)	Voltage* V	Resistance kΩ
20 (68)	3.5	2.3 - 2.7
50 (122)	2.2	0.79 - 0.90

*: This data is reference value and is measured between ECM terminal 107 (Fuel tank temperature sensor) and ground.

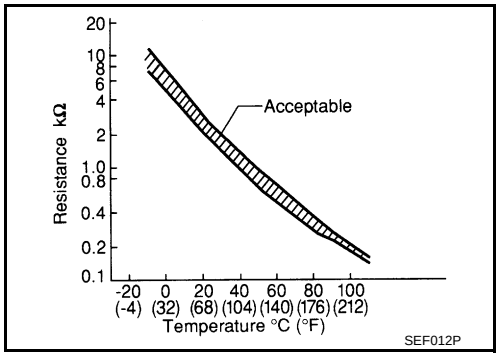

CAUTION:
Do not use ECM ground terminals when measuring input/output voltage. Doing so may result in damage to the ECM's transistor. Use a ground other than ECM terminals, such as the ground.

On Board Diagnosis Logic

INFOID:0000000001717380

DTC No.	Trouble diagnosis name	DTC detecting condition	Possible cause
P0181 0181	Fuel tank temperature sensor circuit range/performance	Rationally incorrect voltage from the sensor is sent to ECM, compared with the voltage signals from engine coolant temperature sensor and intake air temperature sensor.	• Harness or connectors (The sensor circuit is open or shorted) • Fuel tank temperature sensor

DTC Confirmation Procedure

INFOID:0000000001717381

NOTE:
If DTC Confirmation Procedure has been previously conducted, always perform the following before conducting the next step.
1. Turn ignition switch OFF and wait at least 10 seconds.
2. Turn ignition switch ON.
3. Turn ignition switch OFF and wait at least 10 seconds.

WITH CONSULT-III

1. Turn ignition switch ON.
2. Select “DATA MONITOR” mode with CONSULT-III.
3. Wait at least 10 seconds.
   If the result is NG, go to EC-293, "Diagnosis Procedure".
   If the result is OK, go to following step.
4. Check “COOLAN TEMP/S” value.
   If “COOLAN TEMP/S” is less than 60°C (140°F), the result will be OK.
   If “COOLAN TEMP/S” is above 60°C (140°F), go to the following step.
5. Cool engine down until “COOLAN TEMP/S” is less than 60°C (140°F).

6. Wait at least 10 seconds.
7. Check 1st trip DTC.
8. If 1st trip DTC is detected, go to EC-293, "Diagnosis Procedure".

WITH GST

Follow the procedure “WITH CONSULT-III” above.

Wiring Diagram

INFOID:0000000001717382

EC-FTTS-01

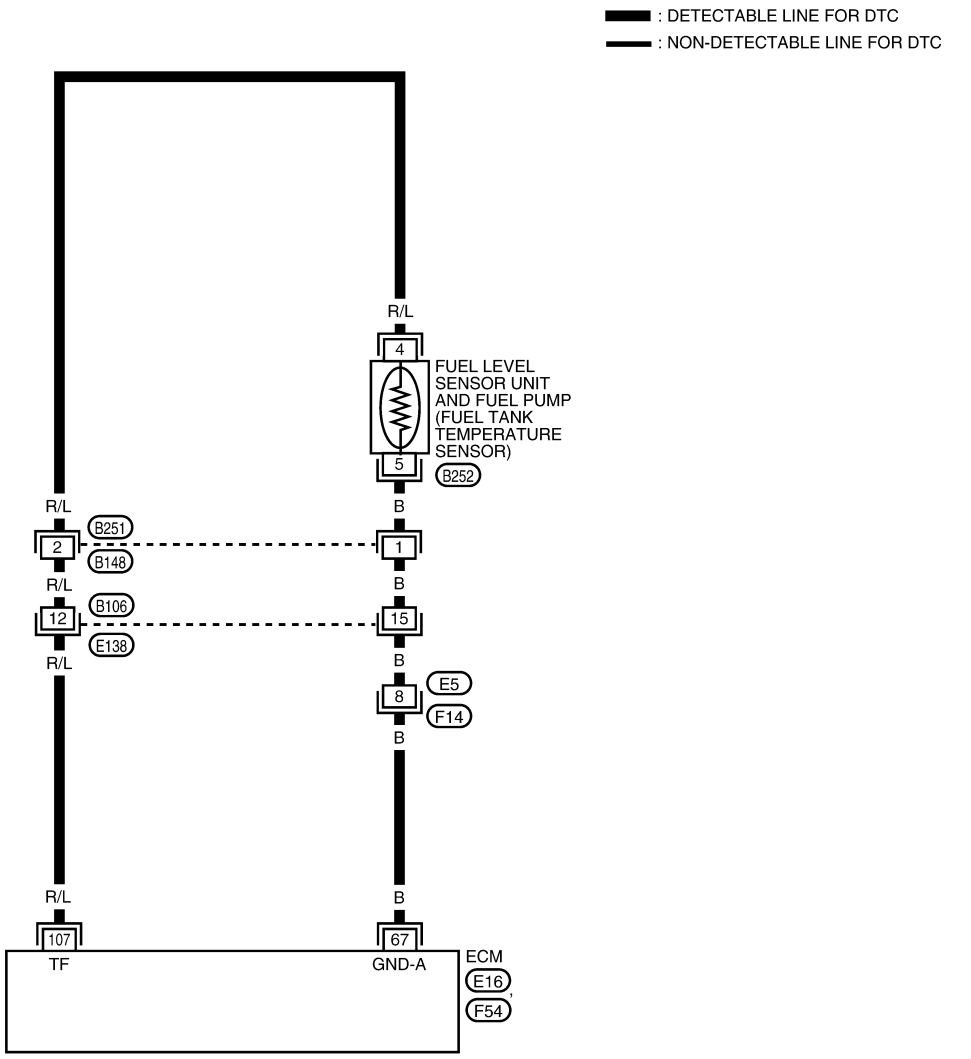

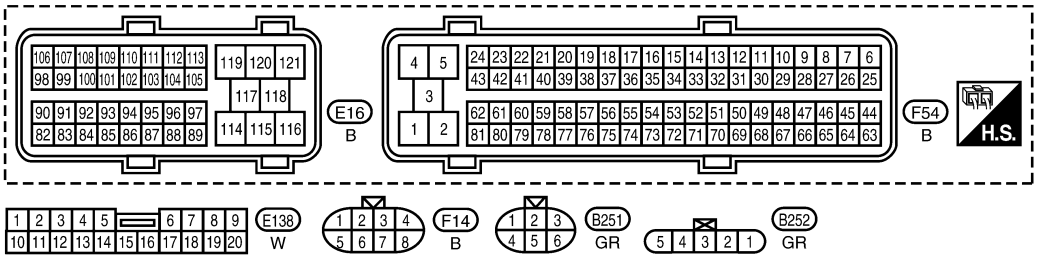

BBWA2516E

Diagnosis Procedure

INFOID:0000000001717383

1. CHECK GROUND CONNECTIONS

1. Turn ignition switch OFF.
2. Loosen and retighten three ground screws on the body. Refer to EC-138, "Ground Inspection".

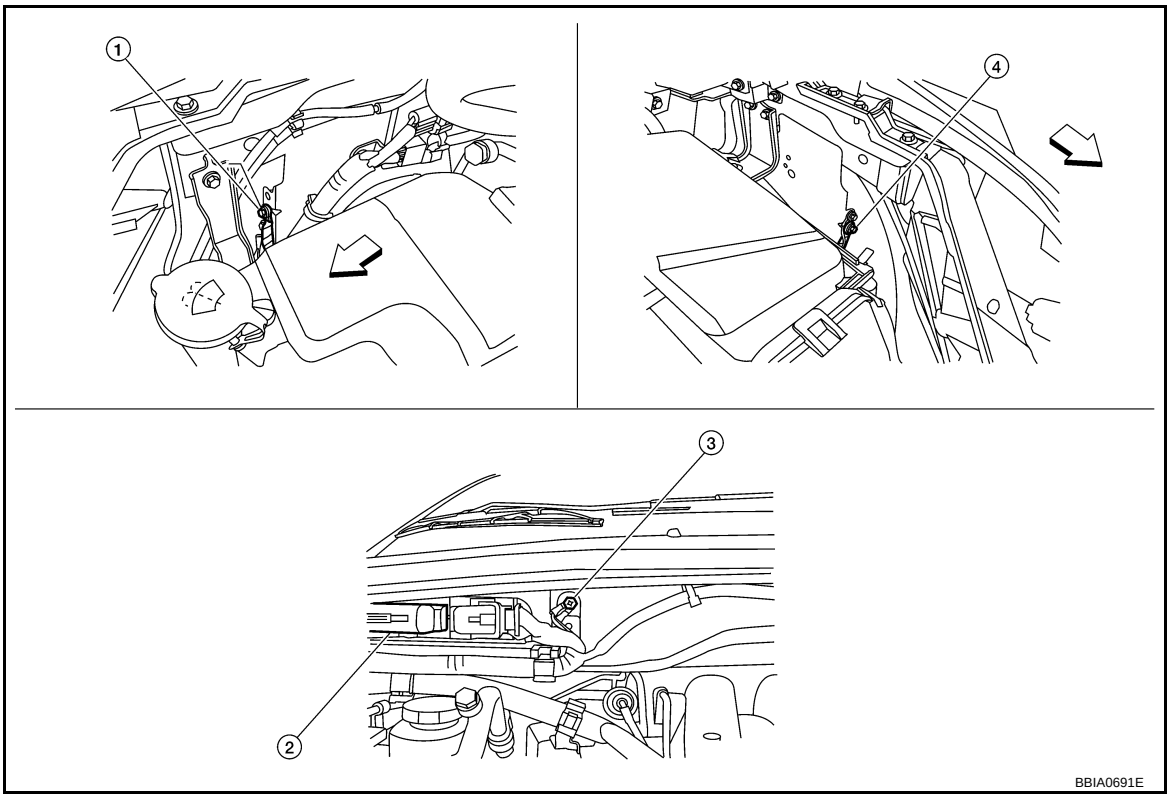

⇦: Vehicle front

1. Body ground E24
2. ECM
3. Body ground E9
4. Body ground E15

OK or NG

OK >> GO TO 2.
NG >> Repair or replace ground connections.

2. CHECK FUEL TANK TEMPERATURE SENSOR POWER SUPPLY CIRCUIT

1. Disconnect “fuel level sensor unit and fuel pump” harness connector (1).
- ⇦: Vehicle front
2. Turn ignition switch ON.

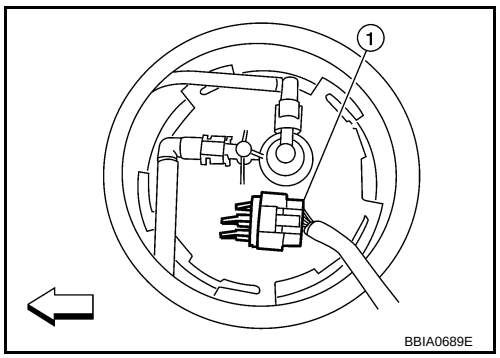

3. Check voltage between “fuel level sensor unit and fuel pump” terminal 4 and ground with CONSULT-III or tester.

Voltage: Approximately 5V

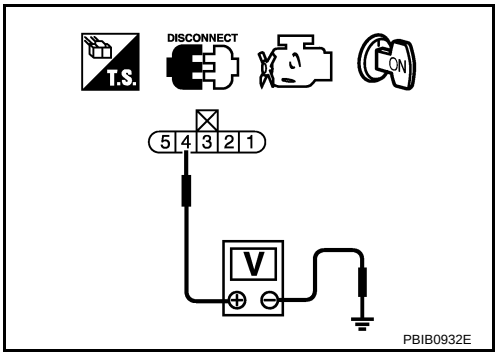

OK or NG

OK >> GO TO 4.
NG >> GO TO 3.

3. DETECT MALFUNCTIONING PART

Check the following.
- Harness connectors B106, E138
- Harness connectors B148, B251
- Harness for open or short between ECM and “fuel level sensor unit and fuel pump”

>> Repair harness or connector.

4. CHECK FUEL TANK TEMPERATURE SENSOR GROUND CIRCUIT FOR OPEN AND SHORT

1. Turn ignition switch OFF.
2. Disconnect ECM harness connector.
3. Check harness continuity between “fuel level sensor unit and fuel pump” terminal 5 and ECM terminal 67. Refer to Wiring Diagram.

Continuity should exist.

4. Also check harness for short to ground and short to power.

OK or NG

OK >> GO TO 6.
NG >> GO TO 5.

5. DETECT MALFUNCTIONING PART

Check the following.
- Harness connectors E5, F14
- Harness connectors B106, E138
- Harness connectors B148, B251
- Harness for open or short between “fuel level sensor unit and fuel pump” and ECM

>> Repair open circuit or short to ground or short to power in harness or connector.

6. CHECK FUEL TANK TEMPERATURE SENSOR

Refer to EC-294, "Component Inspection".

OK or NG

OK >> GO TO 7.
NG >> Replace “fuel level sensor unit and fuel pump”.

7. CHECK INTERMITTENT INCIDENT

Refer to EC-130.

>> **INSPECTION END**

Component Inspection

INFOID:0000000001717384

FUEL TANK TEMPERATURE SENSOR

1. Remove “fuel level sensor unit and fuel pump”.

2. Check resistance between “fuel level sensor unit and fuel pump” terminals 4 and 5 by heating with hot water or heat gun as shown in the figure.

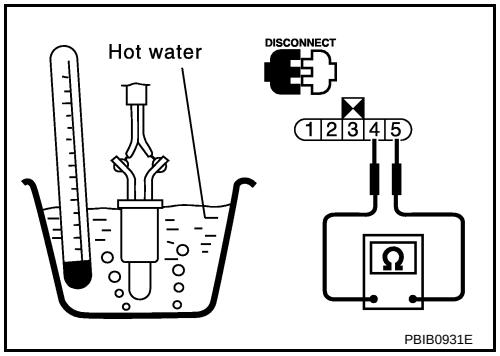

Temperature °C (°F)	Resistance kΩ
20 (68)	2.3 - 2.7
50 (122)	0.79 - 0.90

Removal and Installation

INFOID:0000000001717385

FUEL TANK TEMPERATURE SENSOR

Refer to FL-5.

DTC P0182, P0183 FTT SENSOR

Component Description

INFOID:0000000001717386

The fuel tank temperature sensor is used to detect the fuel temperature inside the fuel tank. The sensor modifies a voltage signal from the ECM. The modified signal returns to the ECM as the fuel temperature input. The sensor uses a thermistor which is sensitive to the change in temperature. The electrical resistance of the thermistor decreases as temperature increases.

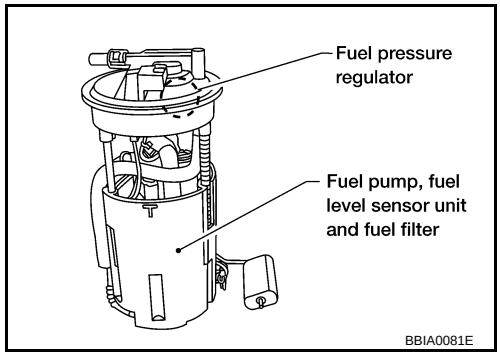

<Reference data>

Fluid temperature °C (°F)	Voltage* V	Resistance kΩ
20 (68)	3.5	2.3 - 2.7
50 (122)	2.2	0.79 - 0.90

*: This data is reference value and is measured between ECM terminal 107 (Fuel tank temperature sensor) and ground.

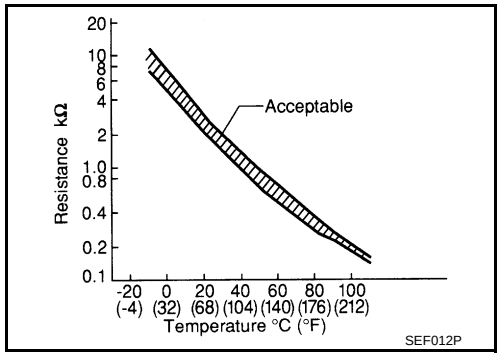

CAUTION:

Do not use ECM ground terminals when measuring input/output voltage. Doing so may result in damage to the ECM's transistor. Use a ground other than ECM terminals, such as the ground.

On Board Diagnosis Logic

INFOID:0000000001717387

DTC No.	Trouble diagnosis name	DTC detecting condition	Possible cause
P0182 0182	Fuel tank temperature sensor circuit low input	An excessively low voltage from the sensor is sent to ECM.	• Harness or connectors (The sensor circuit is open or shorted.) • Fuel tank temperature sensor
P0183 0183	Fuel tank temperature sensor circuit high input	An excessively high voltage from the sensor is sent to ECM.	

DTC Confirmation Procedure

INFOID:0000000001717388

1. If DTC Confirmation Procedure has been previously conducted, always perform the following before conducting the next step.

a. Turn ignition switch OFF and wait at least 10 seconds.
b. Turn ignition switch ON.
c. Turn ignition switch OFF and wait at least 10 seconds.

2. Turn ignition switch ON.
3. Wait at least 5 seconds.
4. Check 1st trip DTC.
5. If 1st trip DTC is detected, go to EC-297, "Diagnosis Procedure".

Wiring Diagram

INFOID:0000000001717389

EC-FTTS-01

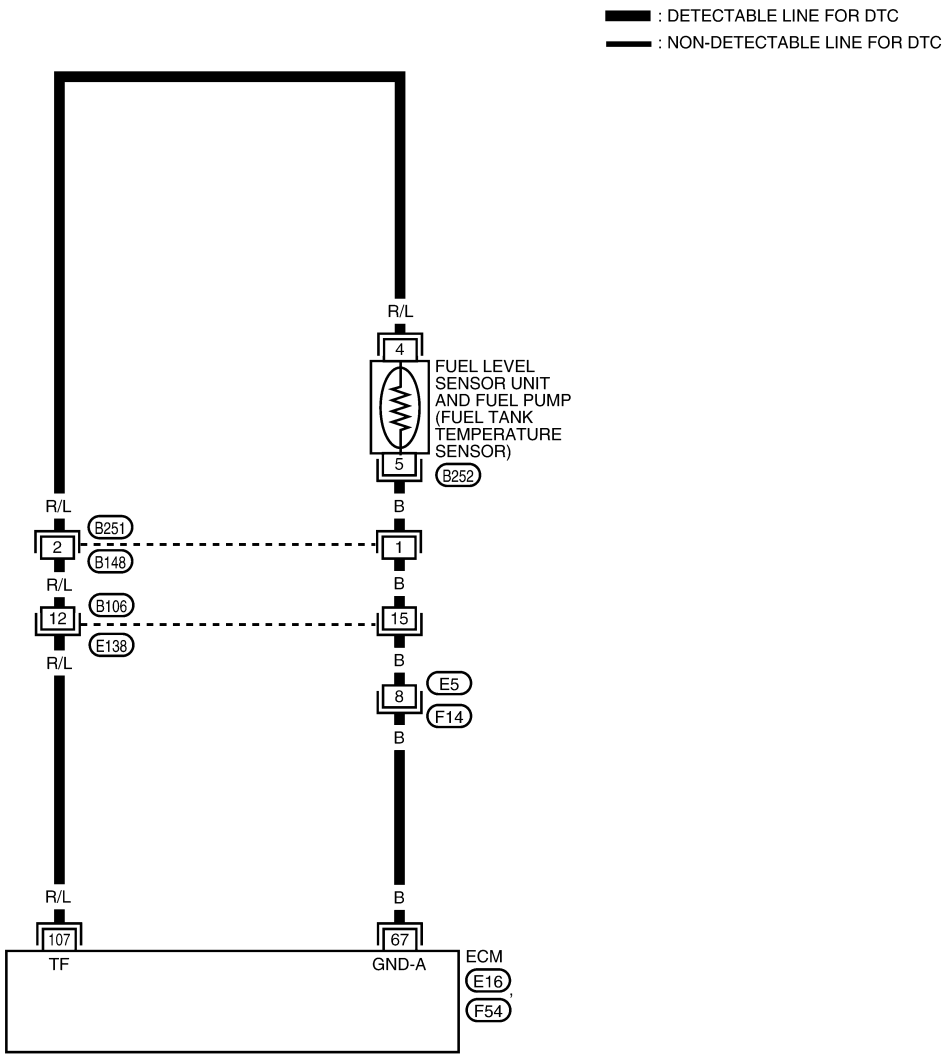

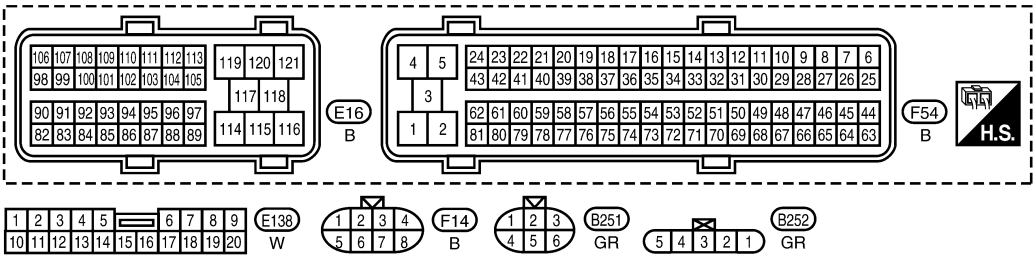

Diagnosis Procedure

INFOID:0000000001717390

1. CHECK GROUND CONNECTIONS

1. Turn ignition switch OFF.
2. Loosen and retighten three ground screws on the body. Refer to EC-138, "Ground Inspection".

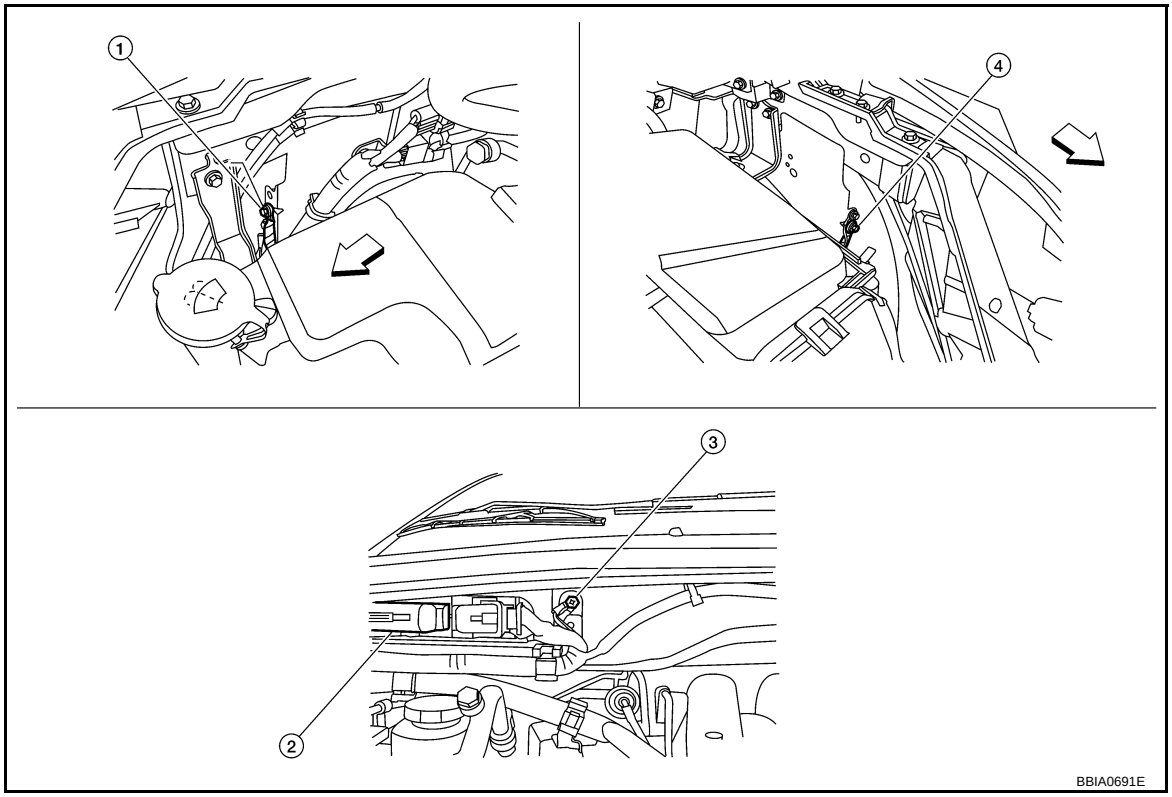

⇦: Vehicle front

1. Body ground E24
2. ECM
3. Body ground E9
4. Body ground E15

OK or NG

OK >> GO TO 2.
NG >> Repair or replace ground connections.

2. CHECK FUEL TANK TEMPERATURE SENSOR POWER SUPPLY CIRCUIT

1. Disconnect “fuel level sensor unit and fuel pump” harness connector (1).
- ⇦: Vehicle front
2. Turn ignition switch ON.

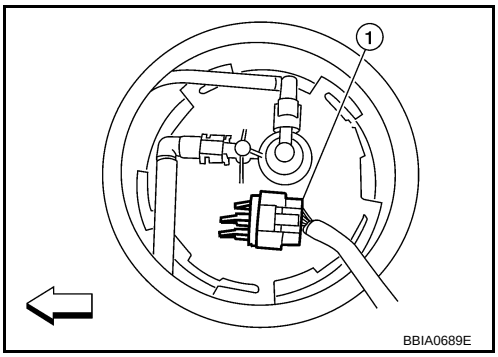

3. Check voltage between “fuel level sensor unit and fuel pump” terminal 4 and ground with CONSULT-III or tester.

Voltage: Approximately 5V

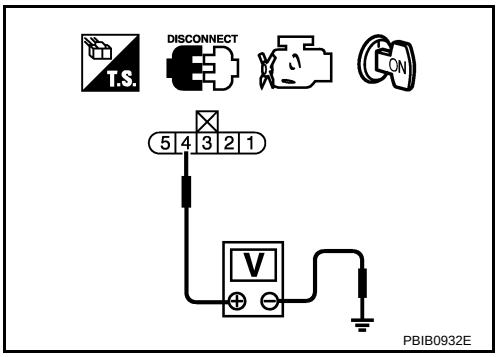

OK or NG

OK >> GO TO 4.
NG >> GO TO 3.

3. DETECT MALFUNCTIONING PART

Check the following.
- Harness connectors B106, E138
- Harness connectors B148, B251
- Harness for open or short between ECM and “fuel level sensor unit and fuel pump”

>> Repair harness or connector.

4. CHECK FUEL TANK TEMPERATURE SENSOR GROUND CIRCUIT FOR OPEN AND SHORT

1. Turn ignition switch OFF.
2. Disconnect ECM harness connector.
3. Check harness continuity between “fuel level sensor unit and fuel pump” terminal 5 and ECM terminal 67. Refer to Wiring Diagram.

Continuity should exist.

4. Also check harness for short to ground and short to power.

OK or NG

OK >> GO TO 6.
NG >> GO TO 5.

5. DETECT MALFUNCTIONING PART

Check the following.
- Harness connectors E5, F14
- Harness connectors B106, E138
- Harness connectors B148, B251
- Harness for open or short between “fuel level sensor unit and fuel pump” and ECM

>> Repair open circuit or short to ground or short to power in harness or connector.

6. CHECK FUEL TANK TEMPERATURE SENSOR

Refer to EC-299, "Component Inspection".

OK or NG

OK >> GO TO 7.
NG >> Replace “fuel level sensor unit and fuel pump”.

7. CHECK INTERMITTENT INCIDENT

Refer to EC-130.

>> **INSPECTION END**

Component Inspection

INFOID:0000000001717391

FUEL TANK TEMPERATURE SENSOR

1. Remove “fuel level sensor unit and fuel pump”.
2. Check resistance between “fuel level sensor unit and fuel pump” terminals 4 and 5 by heating with hot water or heat gun as shown in the figure.

Temperature °C (°F)	Resistance kΩ
20 (68)	2.3 - 2.7
50 (122)	0.79 - 0.90

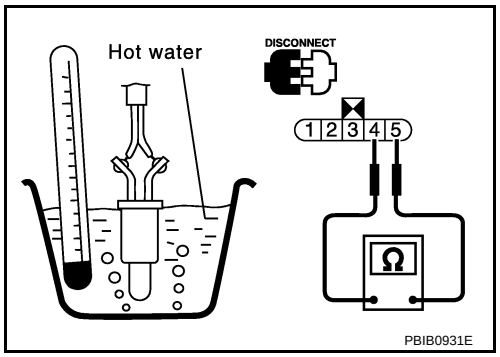

Removal and Installation

INFOID:0000000001717392

FUEL TANK TEMPERATURE SENSOR

Refer to FL-5.

DTC P0222, P0223 TP SENSOR

Component Description

INFOID:0000000001717393

Electric throttle control actuator consists of throttle control motor, throttle position sensor, etc. The throttle position sensor responds to the throttle valve movement.
The throttle position sensor has the two sensors. These sensors are a kind of potentiometers which transform the throttle valve position into output voltage, and emit the voltage signal to the ECM. In addition, these sensors detect the opening and closing speed of the throttle valve and feed the voltage signals to the ECM. The ECM judges the current opening angle of the throttle valve from these signals and the ECM controls the throttle control motor to make the throttle valve opening angle properly in response to driving condition.

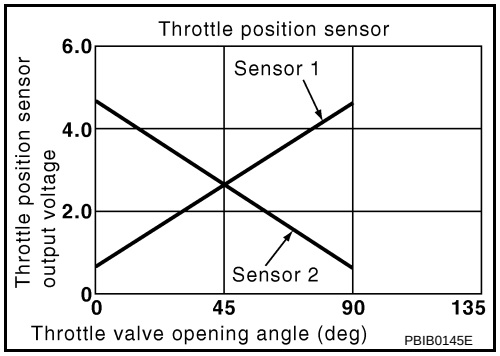

CONSULT-III Reference Value in Data Monitor Mode

INFOID:0000000001717394

Specification data are reference values.

MONITOR ITEM	CONDITION		SPECIFICATION
TP SEN 1-B1 TP SEN 2-B1*	• Ignition switch: ON (Engine stopped) • Shift lever: D	Accelerator pedal: Fully released	More than 0.36V
		Accelerator pedal: Fully depressed	Less than 4.75V

*: Throttle position sensor 2 signal is converted by ECM internally. Thus, it differs from ECM terminal voltage signal.

On Board Diagnosis Logic

INFOID:0000000001717395

These self-diagnoses have the one trip detection logic.

DTC No.	Trouble diagnosis name	DTC detecting condition	Possible cause
P0222 0222	Throttle position sensor 1 circuit low input	An excessively low voltage from the TP sensor 1 is sent to ECM.	• Harness or connectors (TP sensor 1 circuit is open or shorted.) (APP sensor 2 circuit is shorted.) • Electric throttle control actuator (TP sensor 1) • Accelerator pedal position sensor (APP sensor 2)
P0223 0223	Throttle position sensor 1 circuit high input	An excessively high voltage from the TP sensor 1 is sent to ECM.	

FAIL-SAFE MODE

When the malfunction is detected, ECM enters fail-safe mode an the MIL lights up.

Engine operation condition in fail-safe mode
The ECM controls the electric throttle control actuator in regulating the throttle opening in order for the idle position to be within +10 degrees. The ECM regulates the opening speed of the throttle valve to be slower than the normal condition. So, the acceleration will be poor.

DTC Confirmation Procedure

INFOID:0000000001717396

NOTE:
If DTC Confirmation Procedure has been previously conducted, always perform the following before conducting the next step.
1. Turn ignition switch OFF and wait at least 10 seconds.
2. Turn ignition switch ON.
3. Turn ignition switch OFF and wait at least 10 seconds.

TESTING CONDITION:
Before performing the following procedure, confirm that battery voltage is more than 10V at idle.

1. Start engine and let it idle for 1 second.

2. Check DTC.
3. If DTC is detected, go to EC-303, "Diagnosis Procedure".

Wiring Diagram

INFOID:0000000001717397

EC-TPS1-01

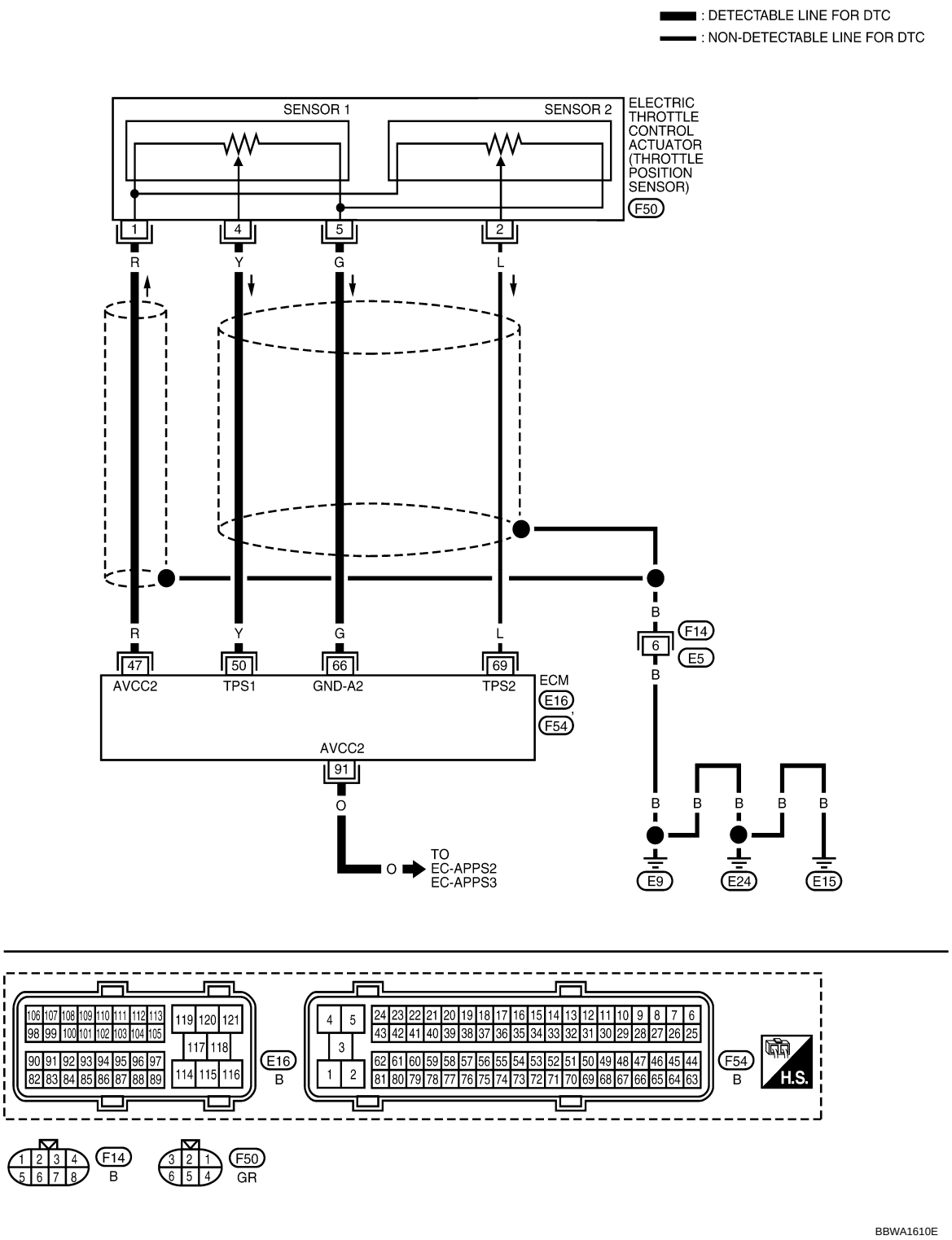

Specification data are reference values and are measured between each terminal and ground.

CAUTION:

Do not use ECM ground terminals when measuring input/output voltage. Doing so may result in damage to the ECM's transistor. Use a ground other than ECM terminals, such as the ground.

TERMINAL NO.	WIRE COLOR	ITEM	CONDITION	DATA (DC Voltage)
47	R	Throttle position sensor power supply	**[Ignition switch: ON]**	Approximately 5V
50	Y	Throttle position sensor 1	**[Ignition switch: ON]** • Engine stopped • Shift lever: D • Accelerator pedal: Fully released	More than 0.36V
			[Ignition switch: ON] • Engine stopped • Shift lever: D • Accelerator pedal: Fully depressed	Less than 4.75V
66	G	Throttle position sensor ground	**[Engine is running]** • **Warm-up condition** • Idle speed	Approximately 0V
69	L	Throttle position sensor 2	**[Ignition switch: ON]** • Engine stopped • Shift lever: D • Accelerator pedal: Fully released	Less than 4.75V
			[Ignition switch: ON] • Engine stopped • Shift lever: D • Accelerator pedal: Fully depressed	More than 0.36V
91	O	APP sensor 2 power supply	**[Ignition switch: ON]**	Approximately 5V

Diagnosis Procedure

INFOID:0000000001717398

1. CHECK GROUND CONNECTIONS

1. Turn ignition switch OFF.
2. Loosen and retighten three ground screws on the body. Refer to EC-138, "Ground Inspection".

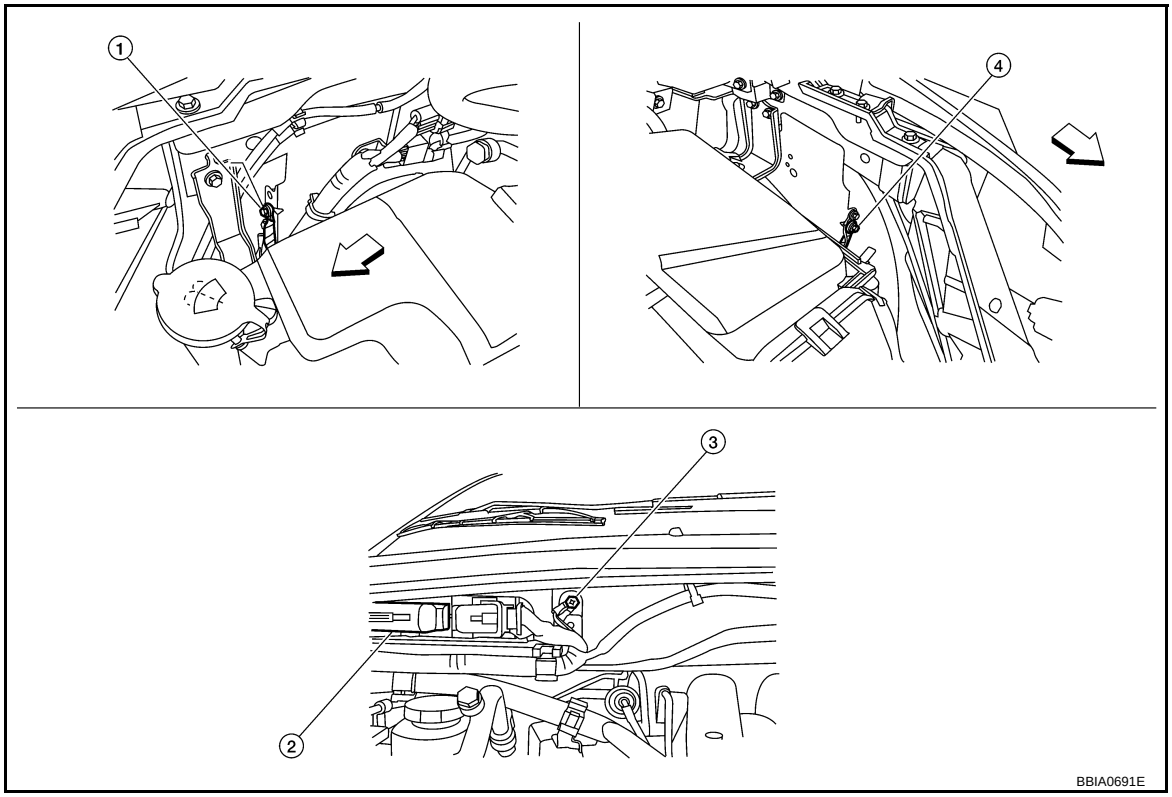

⇦: Vehicle front

1. Body ground E24
2. ECM
3. Body ground E9
4. Body ground E15

OK or NG

OK >> GO TO 2.
NG >> Repair or replace ground connections.

2. CHECK THROTTLE POSITION SENSOR 1 POWER SUPPLY CIRCUIT-I

1. Disconnect electric throttle control actuator harness connector.
2. Turn ignition switch ON.

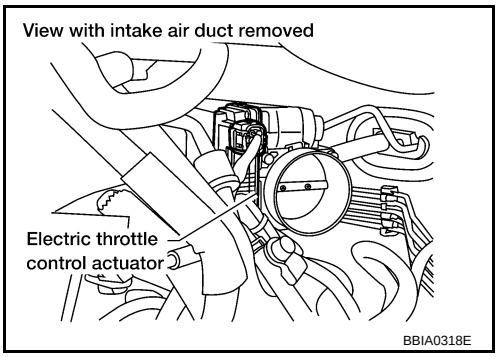

3. Check voltage between electric throttle control actuator terminal 1 and ground with CONSULT-III or tester.

Voltage: Approximately 5V

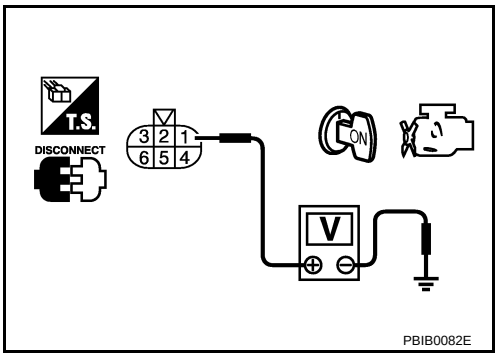

OK or NG

OK >> GO TO 7.
NG >> GO TO 3.

3. CHECK THROTTLE POSITION SENSOR 1 POWER SUPPLY CIRCUIT-II

1. Turn ignition switch OFF.
2. Disconnect ECM harness connector.
3. Check harness continuity between electric throttle control actuator terminal 1 and ECM terminal 47. Refer to Wiring Diagram.

Continuity should exist.

OK or NG

OK >> GO TO 4.
NG >> Repair open circuit.

4. CHECK THROTTLE POSITION SENSOR 1 POWER SUPPLY CIRCUIT-III

Check harness for short to power and short to ground, between the following terminals.

ECM terminal	Sensor terminal	Reference Wiring Diagram
47	Electric throttle control actuator terminal 1	EC-302
91	APP sensor terminal 6	EC-535

OK or NG

OK >> GO TO 5.
NG >> Repair short to ground or short to power in harness or connectors.

5. CHECK APP SENSOR

Refer to EC-539, "Component Inspection".

OK or NG

OK >> GO TO 11.
NG >> GO TO 6.

6. REPLACE ACCELERATOR PEDAL ASSEMBLY

1. Replace accelerator pedal assembly.
2. Perform EC-73, "Accelerator Pedal Released Position Learning".
3. Perform EC-73, "Throttle Valve Closed Position Learning".
4. Perform EC-73, "Idle Air Volume Learning".

>> **INSPECTION END**

7. CHECK THROTTLE POSITION SENSOR 1 GROUND CIRCUIT FOR OPEN AND SHORT

1. Turn ignition switch OFF.
2. Disconnect ECM harness connector.
3. Check harness continuity between ECM terminal 66 and electric throttle control actuator terminal 5. Refer to Wiring Diagram.

Continuity should exist.

4. Also check harness for short to ground and short to power.

OK or NG

OK >> GO TO 8.
NG >> Repair open circuit or short to ground or short to power in harness or connectors.

8. CHECK THROTTLE POSITION SENSOR 1 INPUT SIGNAL CIRCUIT FOR OPEN AND SHORT

1. Check harness continuity between ECM terminal 50 and electric throttle control actuator terminal 4. Refer to Wiring Diagram.

Continuity should exist.

2. Also check harness for short to ground and short to power.

OK or NG

OK >> GO TO 9.
NG >> Repair open circuit or short to ground or short to power in harness or connectors.

9. CHECK THROTTLE POSITION SENSOR

Refer to EC-306, "Component Inspection".

OK or NG

OK >> GO TO 11.
NG >> GO TO 10.

10. REPLACE ELECTRIC THROTTLE CONTROL ACTUATOR

1. Replace the electric throttle control actuator.
2. Perform EC-73, "Throttle Valve Closed Position Learning".
3. Perform EC-73, "Idle Air Volume Learning".

>> **INSPECTION END**

11. CHECK INTERMITTENT INCIDENT

Refer to EC-130.

>> **INSPECTION END**

Component Inspection

INFOID:0000000001717399

THROTTLE POSITION SENSOR

1. Reconnect all harness connectors disconnected.
2. Perform EC-73, "Throttle Valve Closed Position Learning".
3. Turn ignition switch ON.
4. Set shift lever to D position.
5. Check voltage between ECM terminals 50 (TP sensor 1 signal), 69 (TP sensor 2 signal) and ground under the following conditions.

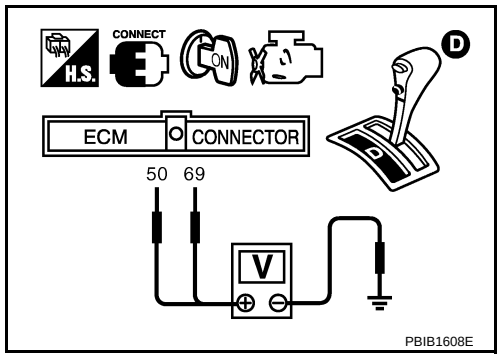

Terminal	Accelerator pedal	Voltage
50 (Throttle position sensor 1)	Fully released	More than 0.36V
	Fully depressed	Less than 4.75V
69 (Throttle position sensor 2)	Fully released	Less than 4.75V
	Fully depressed	More than 0.36V

6. If NG, replace electric throttle control actuator and go to the next step.
7. Perform EC-73, "Throttle Valve Closed Position Learning".
8. Perform EC-73, "Idle Air Volume Learning".

Removal and Installation

INFOID:0000000001717400

ELECTRIC THROTTLE CONTROL ACTUATOR

Refer to EM-17.

DTC P0300, P0301, P0302, P0303, P0304, P0305, P0306 MULTIPLE CYLINDER MISFIRE, NO. 1 - 6 CYLINDER MISFIRE

On Board Diagnosis Logic

INFOID:0000000001717401

When a misfire occurs, engine speed will fluctuate. If the engine speed fluctuates enough to cause the crankshaft position (CKP) sensor (POS) signal to vary, ECM can determine that a misfire is occurring.

Sensor	Input Signal to ECM	ECM function
Crankshaft position sensor (POS)	Engine speed	On board diagnosis of misfire

The misfire detection logic consists of the following two conditions.

1. One Trip Detection Logic (Three Way Catalyst Damage)
   On the first trip that a misfire condition occurs that can damage the three way catalyst (TWC) due to overheating, the MIL will blink.
   When a misfire condition occurs, the ECM monitors the CKP sensor signal every 200 engine revolutions for a change.
   When the misfire condition decreases to a level that will not damage the TWC, the MIL will turn off.
   If another misfire condition occurs that can damage the TWC on a second trip, the MIL will blink.
   When the misfire condition decreases to a level that will not damage the TWC, the MIL will remain on.
   If another misfire condition occurs that can damage the TWC, the MIL will begin to blink again.
2. Two Trip Detection Logic (Exhaust quality deterioration)
   For misfire conditions that will not damage the TWC (but will affect vehicle emissions), the MIL will only light when the misfire is detected on a second trip. During this condition, the ECM monitors the CKP sensor signal every 1,000 engine revolutions.
   A misfire malfunction can be detected on any one cylinder or on multiple cylinders.

DTC No.	Trouble diagnosis name	DTC detecting condition	Possible cause
P0300 0300	Multiple cylinder misfire detected	Multiple cylinder misfire.	• Improper spark plug • Insufficient compression • Incorrect fuel pressure • The fuel injector circuit is open or shorted • Fuel injector • Intake air leak • The ignition signal circuit is open or shorted • Lack of fuel • Signal plate • Air fuel ratio (A/F) sensor 1 • Incorrect PCV hose connection
P0301 0301	No.1 cylinder misfire detected	No. 1 cylinder misfires.	
P0302 0302	No. 2 cylinder misfire detected	No. 2 cylinder misfires.	
P0303 0303	No. 3 cylinder misfire detected	No. 3 cylinder misfires.	
P0304 0304	No. 4 cylinder misfire detected	No. 4 cylinder misfires.	
P0305 0305	No. 5 cylinder misfire detected	No. 5 cylinder misfires.	
P0306 0306	No. 6 cylinder misfire detected	No. 6 cylinder misfires.	

DTC Confirmation Procedure

INFOID:0000000001717402

CAUTION:
Always drive vehicle in safe manner according to traffic conditions and obey all traffic laws when driving.
NOTE:
If DTC Confirmation Procedure has been previously conducted, always perform the following before conducting the next step.
1. Turn ignition switch OFF and wait at least 10 seconds.
2. Turn ignition switch ON.
3. Turn ignition switch OFF and wait at least 10 seconds.

WITH CONSULT-III

1. Turn ignition switch ON, and select “DATA MONITOR” mode with CONSULT-III.

2. Start engine and warm it up to normal operating temperature.
3. Turn ignition switch OFF and wait at least 10 seconds.
4. Turn ignition switch ON.
5. Turn ignition switch OFF and wait at least 10 seconds.
6. Restart engine and let it idle for about 15 minutes.
7. Check 1st trip DTC.
8. If 1st trip DTC is detected, go to EC-308, "Diagnosis Procedure".
   NOTE:
   If 1st trip DTC is not detected during above procedure, performing the following procedure is advised.

a. Turn ignition switch OFF and wait at least 10 seconds.
b. Start engine and drive the vehicle under the similar conditions to (1st trip) Freeze Frame Data for a certain time. Refer to the table below.
   Hold the accelerator pedal as steady as possible.

   The similar conditions to (1st trip) Freeze Frame Data means the vehicle operation that the following conditions should be satisfied at the same time.

Engine speed	Engine speed in the freeze frame data ± 400 rpm
Vehicle speed	Vehicle speed in the freeze frame data ± 10 km/h (6 MPH)
Engine coolant temperature (T) condition	When the freeze frame data shows lower than 70 °C (158 °F), T should be lower than 70 °C (158 °F).
	When the freeze frame data shows higher than or equal to 70 °C (158 °F), T should be higher than or equal to 70 °C (158 °F).

The time to driving varies according to the engine speed in the freeze frame data.

Engine speed	Time
Around 1,000 rpm	Approximately 10 minutes
Around 2,000 rpm	Approximately 5 minutes
More than 3,000 rpm	Approximately 3.5 minutes

WITH GST
Follow the procedure “WITH CONSULT-III” above.

Diagnosis Procedure

INFOID:0000000001717403

1. CHECK FOR INTAKE AIR LEAK AND PCV HOSE

1. Start engine and run it at idle speed.
2. Listen for the sound of the intake air leak.
3. Check PCV hose connection.

OK or NG

OK >> GO TO 2.
NG >> Discover air leak location and repair.

2. CHECK FOR EXHAUST SYSTEM CLOGGING

Stop engine and visually check exhaust tube, three way catalyst and muffler for dents.

OK or NG

OK (With CONSULT-III)>>GO TO 3.
OK (Without CONSULT-III)>>GO TO 4.
NG >> Repair or replace it.

3. PERFORM POWER BALANCE TEST

With CONSULT-III

1. Perform “POWER BALANCE” in “ACTIVE TEST” mode.

2. Is there any cylinder which does not produce a momentary engine speed drop?

Yes or No

Yes >> GO TO 4.
No >> GO TO 11.

4. CHECK FUNCTION OF FUEL INJECTOR-I

1. Stop engine.
2. Disconnect harness connector F44 (2), F101 (3).
3. Turn ignition switch ON.

- ⇦: Vehicle front
- Intake manifold collector (1)

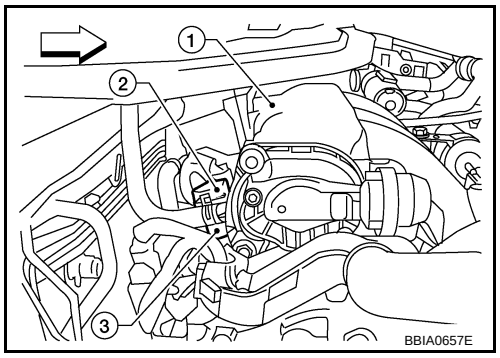

4. Check voltage between harness connector F44 terminal 5 and ground with CONSULT-III or tester.

Voltage: Battery voltage

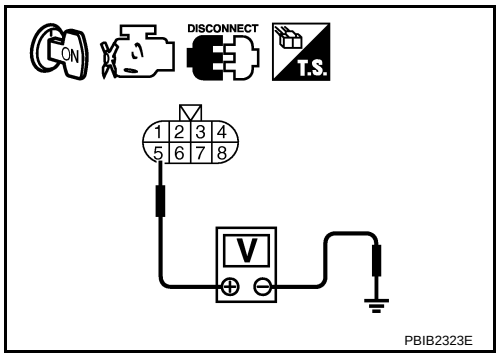

5. Turn ignition switch OFF.
6. Disconnect ECM harness connector.
7. Check harness continuity between harness connector F44 terminal and ECM terminal as follows.
   Refer to Wiring Diagram.

Cylinder	Harness connector F44 terminal	ECM terminal
1	6	23
3	2	22
5	1	21

Continuity should exist.

8. Also check harness for short to ground and short to power.

OK or NG

OK >> GO TO 5.
NG >> Perform trouble diagnosis for FUEL INJECTOR, refer to EC-579.

5. CHECK FUNCTION OF FUEL INJECTOR-II

Provide battery voltage between harness connector F101 as follows and then interrupt it. Listen to each fuel injector operating sound.

Cylinder	Harness connector F101 terminal	
	(+)	(–)
1	5	6
3	5	2
5	5	1

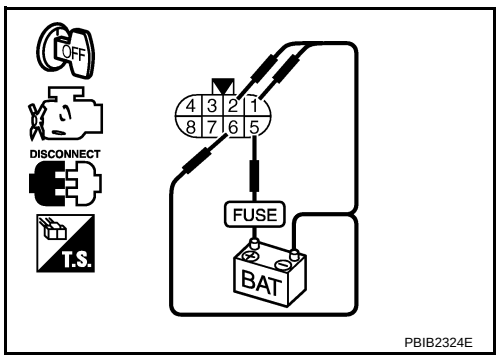

Operating sound should exist.

OK or NG

OK >> GO TO 6.
NG >> Perform trouble diagnosis for FUEL INJECTOR, refer to EC-579.

6. CHECK FUNCTION OF FUEL INJECTOR-III

1. Reconnect all harness connector disconnected.
2. Start engine.
3. Listen to fuel injectors No. 2, No. 4, No.6 operating sound.

Clicking noise should exist.

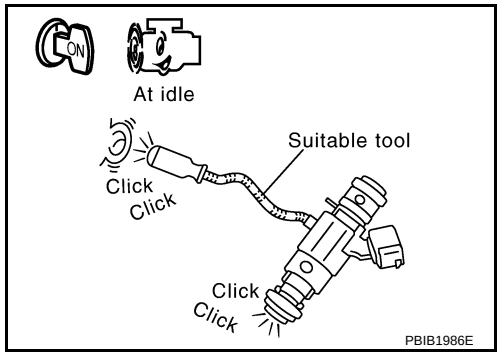

OK or NG

OK >> GO TO 7.
NG >> Perform trouble diagnosis for FUEL INJECTOR, refer to EC-579.

7. CHECK FUNCTION OF IGNITION COIL-I

CAUTION:
Do the following procedure in the place where ventilation is good without the combustible.

1. Turn ignition switch OFF.
2. Remove fuel pump fuse in IPDM E/R to release fuel pressure.
   NOTE:
   Do not use CONSULT-III to release fuel pressure, or fuel pressure applies again during the following procedure.
3. Start engine.
4. After engine stalls, crank it two or three times to release all fuel pressure.
5. Turn ignition switch OFF.
6. Remove all ignition coil harness connectors to avoid the electrical discharge from the ignition coils.
7. Remove ignition coil and spark plug of the cylinder to be checked.

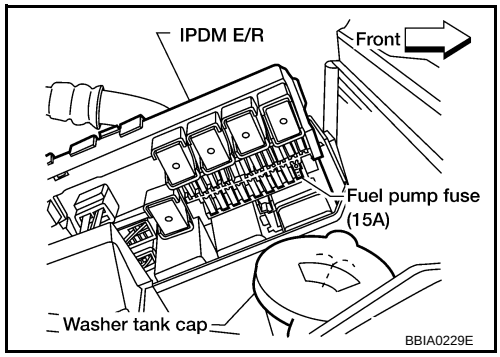

8. Crank engine for 5 seconds or more to remove combustion gas in the cylinder.
9. Connect spark plug and harness connector to ignition coil.
10. Fix ignition coil using a rope etc. with gap of 13 - 17 mm between the edge of the spark plug and grounded metal portion as shown in the figure.
11. Crank engine for about 3 seconds, and check whether spark is generated between the spark plug and the grounded metal portion.

Spark should be generated.

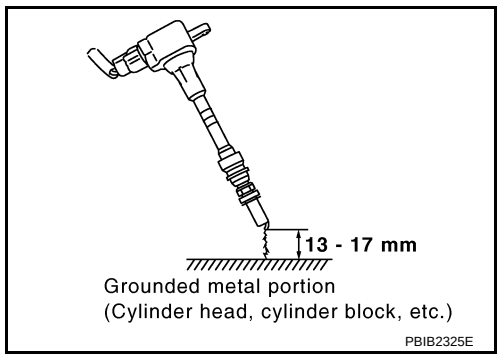

CAUTION:
- **Do not approach to the spark plug and the ignition coil within 50cm. Be careful not to get an electrical shock while checking, because the electrical discharge voltage becomes 20kV or more.**
- **It might cause to damage the ignition coil if the gap of more than 17 mm is taken.**

NOTE:
When the gap is less than 13 mm, the spark might be generated even if the coil is malfunctioning.

OK or NG

OK >> GO TO 11.
NG >> GO TO 8.

8. CHECK FUNCTION OF IGNITION COIL-II

1. Turn ignition switch OFF.

2. Disconnect spark plug and connect a known-good spark plug.
3. Crank engine for about 3 seconds, and recheck whether spark is generated between the spark plug and the grounded metal portion.

Spark should be generated.

OK or NG

OK >> GO TO 9.
NG >> Check ignition coil, power transistor and their circuits. Refer to EC-591.

9. CHECK SPARK PLUG

Check the initial spark plug for fouling, etc.

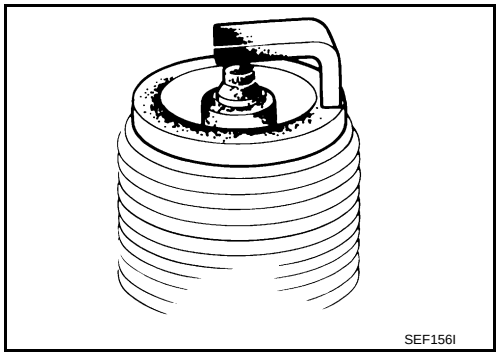

OK or NG

OK >> Replace spark plug(s) with standard type one(s). For spark plug type, refer to MA-20, "Changing Spark Plugs (Platinum-Tipped Type)".
NG >> 1. Repair or clean spark plug.
2. GO TO 10.

10. CHECK FUNCTION OF IGNITION COIL-III

1. Reconnect the initial spark plugs.
2. Crank engine for about three seconds, and recheck whether spark is generated between the spark plug and the grounded portion.

Spark should be generated.

OK or NG

OK >> **INSPECTION END**
NG >> Replace spark plug(s) with standard type one(s). For spark plug type, refer to MA-20, "Changing Spark Plugs (Platinum-Tipped Type)".

11. CHECK COMPRESSION PRESSURE

Check compression pressure. Refer to EM-94, "On-Vehicle Service".

OK or NG

OK >> GO TO 12.
NG >> Check pistons, piston rings, valves, valve seats and cylinder head gaskets.

12. CHECK FUEL PRESSURE

1. Install all removed parts.
2. Release fuel pressure to zero. Refer to EC-75, "Fuel Pressure Check".
3. Install fuel pressure gauge and check fuel pressure. Refer to EC-75, "Fuel Pressure Check".

At idling: Approximately 350 kPa (3.57 kg/cm^2, 51 psi)

OK or NG

OK >> GO TO 14.
NG >> GO TO 13.

13. DETECT MALFUNCTIONING PART

Check the following.
- Fuel pump and circuit (Refer to EC-585.)
- Fuel pressure regulator (Refer to EC-75, "Fuel Pressure Check".)
- Fuel lines
- Fuel filter for clogging

>> Repair or replace.

14. CHECK IGNITION TIMING

Check the following items. Refer to EC-68, "Basic Inspection".

Items	Specifications
Target idle speed	675 ± 50 rpm (in P or N position)
Ignition timing	15 ± 5° BTDC (in P or N position)

OK or NG

OK >> GO TO 15.
NG >> Follow the EC-68, "Basic Inspection".

15. CHECK A/F SENSOR 1 INPUT SIGNAL

1. Turn ignition switch OFF.
2. Disconnect A/F sensor 1 harness connector.

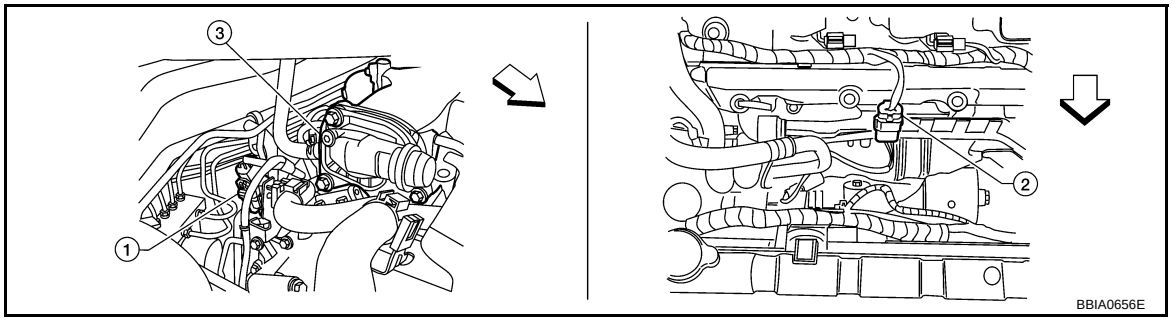

⇦: Vehicle front

1. Air fuel ratio (A/F) sensor 1 (bank 1) harness connector
2. Air fuel ratio (A/F) sensor 1 (bank 2) harness connector
3. Intake manifold collector

3. Disconnect ECM harness connector.
4. Check harness continuity between the following terminals.
   Refer to Wiring Diagram.

	A/F sensor 1 terminal	ECM terminal
Bank 1	1	16
	2	75
	5	35
	6	56
Bank 2	1	76
	2	77
	5	57
	6	58

Continuity should exist.

5. Check harness continuity between the following terminals and ground.
   Refer to Wiring Diagram.

Bank 1		Bank 2	
A/F sensor 1 terminal	ECM terminal	A/F sensor 1 terminal	ECM terminal
1	16	1	76
2	75	2	77

Bank 1		Bank 2	
A/F sensor 1 terminal	ECM terminal	A/F sensor 1 terminal	ECM terminal
5	35	5	57
6	56	6	58

Continuity should not exist.

6. Also check harness for short to power.

OK or NG

OK >> GO TO 16.
NG >> Repair open circuit or short to ground or short to power in harness or connectors.

16. CHECK A/F SENSOR 1 HEATER

Refer to EC-152, "Component Inspection".

OK or NG

OK >> GO TO 17.
NG >> Replace (malfunctioning) A/F sensor 1.

17. CHECK MASS AIR FLOW SENSOR

With CONSULT-III

Check mass air flow sensor signal in “DATA MONITOR” mode with CONSULT-III.

2.0 - 6.0 g·m/sec: at idling
7.0 - 20.0 g·m/sec: at 2,500 rpm

With GST

Check mass air flow sensor signal in Service $01 with GST.

2.0 - 6.0 g·m/sec: at idling
7.0 - 20.0 g·m/sec: at 2,500 rpm

OK or NG

OK >> GO TO 18.
NG >> Check connectors for rusted terminals or loose connections in the mass air flow sensor circuit or ground. Refer to EC-168.

18. CHECK SYMPTOM MATRIX CHART

Check items on the rough idle symptom in EC-85, "Symptom Matrix Chart".

OK or NG

OK >> GO TO 19.
NG >> Repair or replace.

19. ERASE THE 1ST TRIP DTC

Some tests may cause a 1st trip DTC to be set.
Erase the 1st trip DTC from the ECM memory after performing the tests. Refer to EC-43, "Emission-related Diagnostic Information".

>> GO TO 20.

20. CHECK INTERMITTENT INCIDENT

Refer to EC-130.

>> **INSPECTION END**

DTC P0327, P0328 KS

Component Description

INFOID:0000000001717404

The knock sensor is attached to the cylinder block. It senses engine knocking using a piezoelectric element. A knocking vibration from the cylinder block is sensed as vibrational pressure. This pressure is converted into a voltage signal and sent to the ECM.

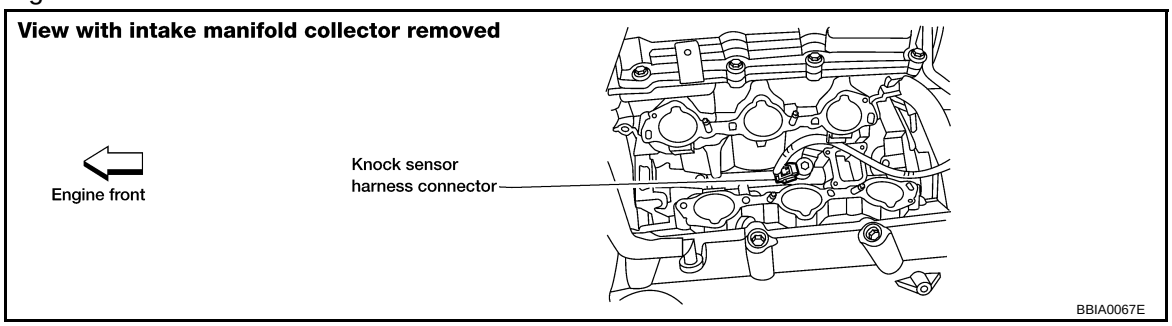

On Board Diagnosis Logic

INFOID:0000000001717405

The MIL will not light up for these diagnoses.

DTC No.	Trouble diagnosis name	DTC detected condition	Possible cause
P0327 0327	Knock sensor circuit low input	An excessively low voltage from the sensor is sent to ECM.	• Harness or connectors (The sensor circuit is open or shorted.) • Knock sensor
P0328 0328	Knock sensor circuit high input	An excessively high voltage from the sensor is sent to ECM.	

DTC Confirmation Procedure

INFOID:0000000001717406

NOTE:
If DTC Confirmation Procedure has been previously conducted, always perform the following before conducting the next step.
1. Turn ignition switch OFF and wait at least 10 seconds.
2. Turn ignition switch ON.
3. Turn ignition switch OFF and wait at least 10 seconds.

TESTING CONDITION:
Before performing the following procedure, confirm that battery voltage is more than 10V at idle.

1. Start engine and run it for at least 5 seconds at idle speed.
2. Check 1st trip DTC.
3. If 1st trip DTC is detected, go to EC-316, "Diagnosis Procedure".

Wiring Diagram

INFOID:0000000001717407

EC-KS-01

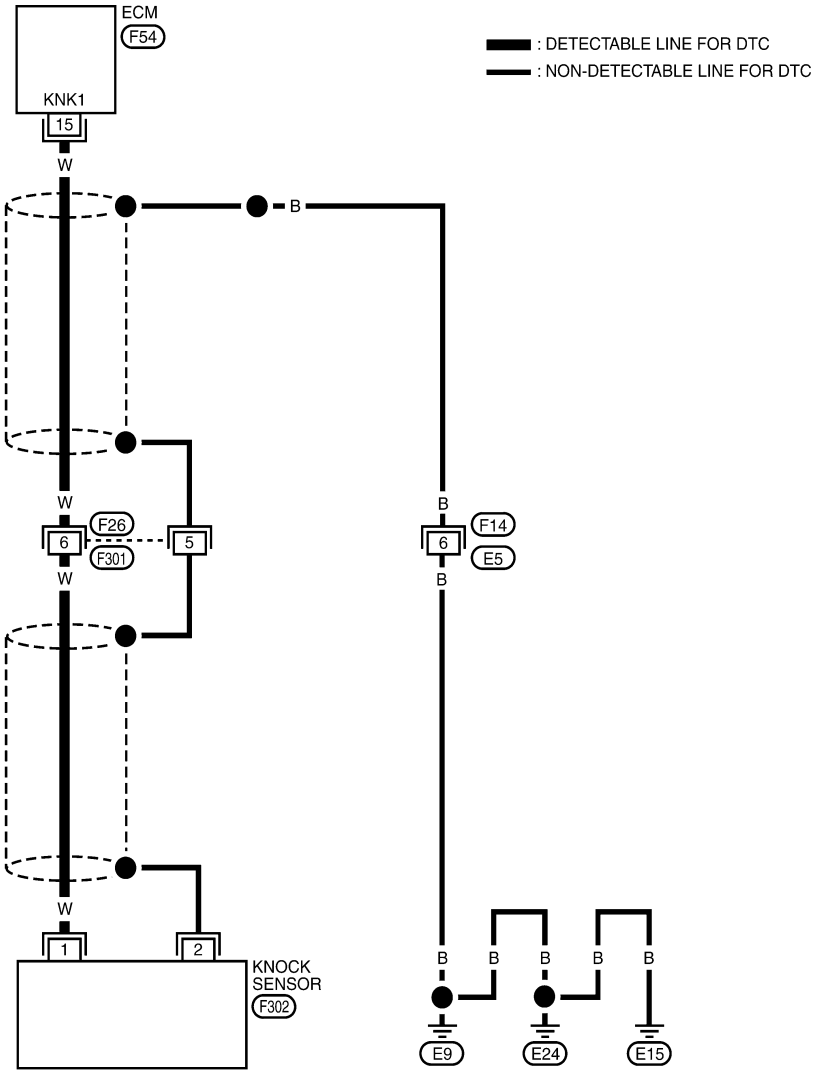

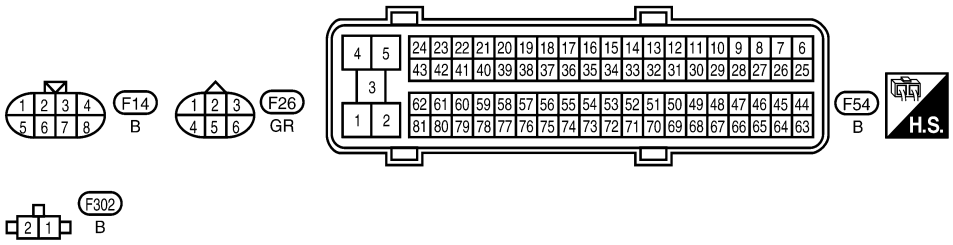

BBWA1611E

Specification data are reference values and are measured between each terminal and ground.

CAUTION:

Do not use ECM ground terminals when measuring input/output voltage. Doing so may result in damage to the ECM's transistor. Use a ground other than ECM terminals, such as the ground.

TER-MI-NAL NO.	WIRE COLOR	ITEM	CONDITION	DATA (DC Voltage)
15	W	Knock sensor	**[Engine is running]** • Idle speed	Approximately 2.5V

Diagnosis Procedure

INFOID:0000000001717408

1. CHECK KNOCK SENSOR INPUT SIGNAL CIRCUIT FOR OPEN AND SHORT-I

1. Turn ignition switch OFF.
2. Disconnect ECM harness connector.
3. Check resistance between ECM terminal 15 and ground. Refer to Wiring Diagram.
   NOTE:
   It is necessary to use an ohmmeter which can measure more than 10 MΩ.

   Resistance: Approximately 532 - 588 kΩ [at 20°C (68°F)]

4. Also check harness for short to ground and short to power.

OK or NG

OK >> GO TO 5.
NG >> GO TO 2.

2. CHECK KNOCK SENSOR INPUT SIGNAL CIRCUIT FOR OPEN AND SHORT-II

1. Disconnect knock sensor harness connector.

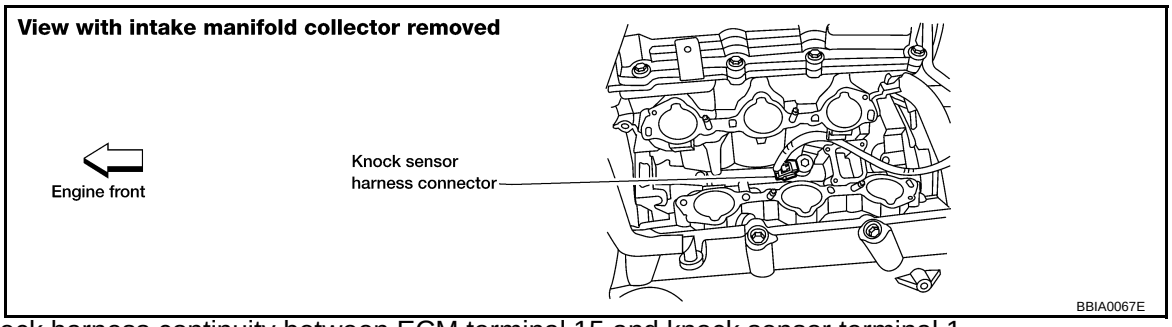

2. Check harness continuity between ECM terminal 15 and knock sensor terminal 1.
   Refer to Wiring Diagram.

   Continuity should exist.

3. Also check harness for short to ground and short to power.

OK or NG

OK >> GO TO 4.
NG >> GO TO 3.

3. DETECT MALFUNCTIONING PART

Check the following.
- Harness connectors F26, F301
- Harness for open or short between ECM and knock sensor

>> Repair open circuit or short to ground or short to power in harness or connectors.

4. CHECK KNOCK SENSOR

Refer to EC-318, "Component Inspection".

OK or NG

OK >> GO TO 5.
NG >> Replace knock sensor.

5. CHECK GROUND CONNECTIONS

1. Loosen and retighten three ground screws on the body. Refer to EC-138, "Ground Inspection".

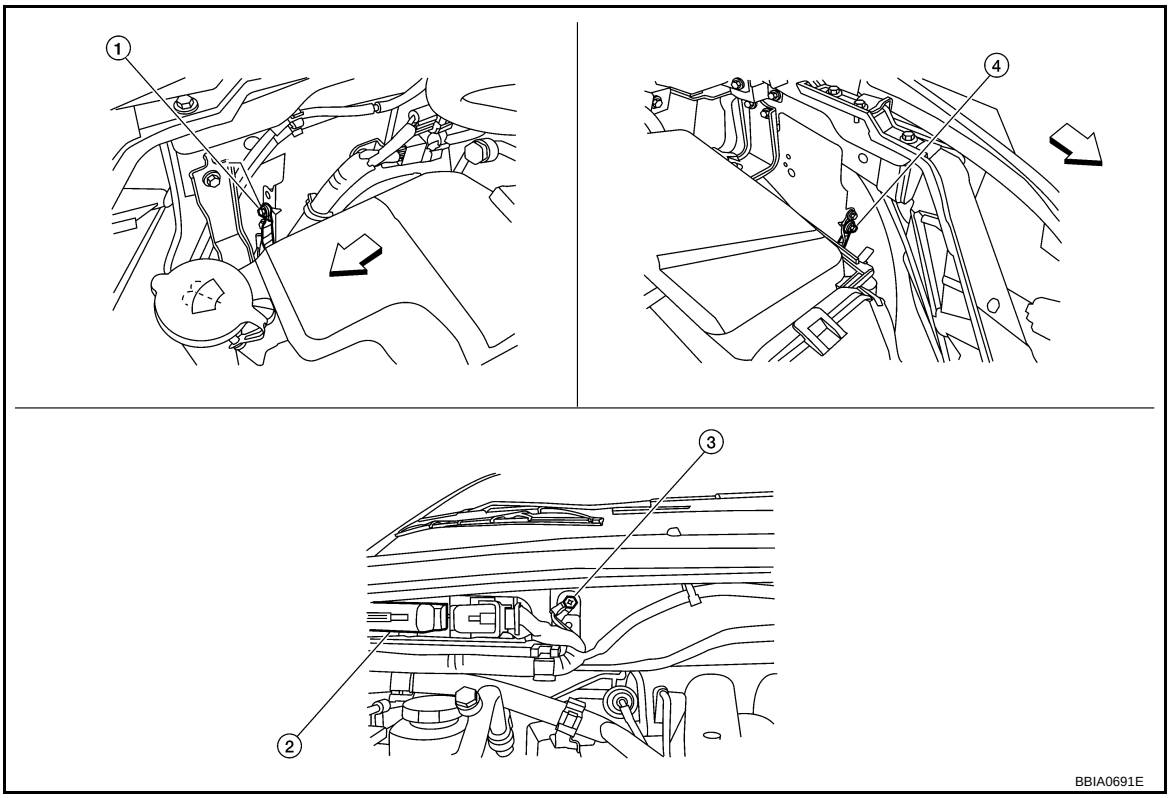

⇦: Vehicle front

1. Body ground E24
2. ECM
3. Body ground E9
4. Body ground E15

OK or NG

OK >> GO TO 6.
NG >> Repair or replace ground connections.

6. CHECK KNOCK SENSOR SHIELD CIRCUIT FOR OPEN AND SHORT

1. Disconnect knock sensor harness connector.
2. Check harness continuity between knock sensor terminal 2 and ground.
   Refer to Wiring Diagram.

   Continuity should exist.

3. Also check harness for short to power.

OK or NG

OK >> GO TO 8.
NG >> GO TO 7.

7. DETECT MALFUNCTIONING PART

Check the following.
- Harness connectors F26, F301
- Harness connectors E5, F14
- Harness for open or short between knock sensor and ground

>> Repair open circuit or short to power in harness or connectors.

8. CHECK INTERMITTENT INCIDENT

Refer to EC-130.

>> **INSPECTION END**

Component Inspection

INFOID:0000000001717409

KNOCK SENSOR

Check resistance between knock sensor terminal 1 and ground.

NOTE:

It is necessary to use an ohmmeter which can measure more than 10 MΩ.

Resistance: Approximately 532 - 588 kΩ [at 20°C (68°F)]

CAUTION:

Do not use any knock sensors that have been dropped or physically damaged. Use only new ones.

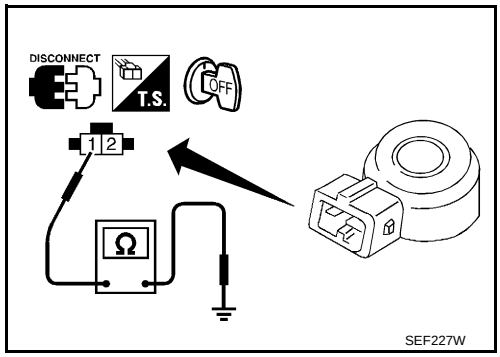

Removal and Installation

INFOID:0000000001717410

KNOCK SENSOR

Refer to EM-116.

DTC P0335 CKP SENSOR (POS)

Component Description

INFOID:0000000001717411

The crankshaft position sensor (POS) is located on the oil pan facing the gear teeth (cogs) of the signal plate. It detects the fluctuation of the engine revolution.
The sensor consists of a permanent magnet and Hall IC.
When the engine is running, the high and low parts of the teeth cause the gap with the sensor to change.
The changing gap causes the magnetic field near the sensor to change.
Due to the changing magnetic field, the voltage from the sensor changes.
The ECM receives the voltage signal and detects the fluctuation of the engine revolution.
ECM receives the signals as shown in the figure.

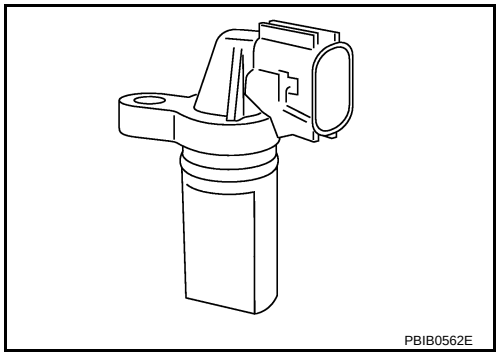

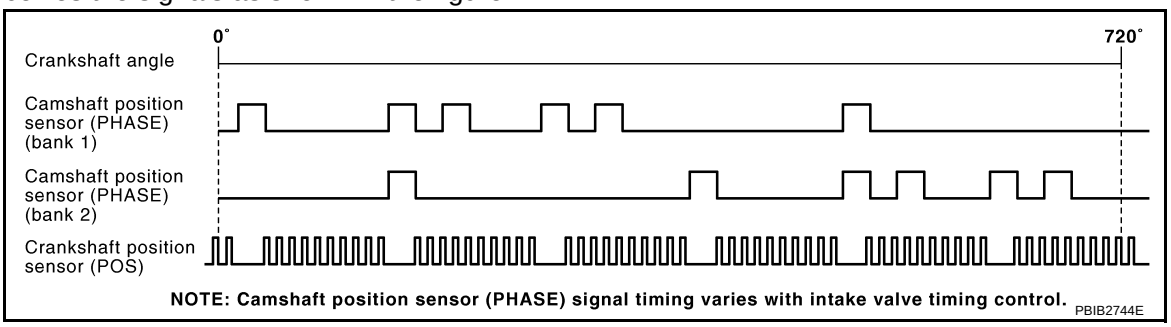

CONSULT-III Reference Value in Data Monitor Mode

INFOID:0000000001717412

Specification data are reference values.

MONITOR ITEM	CONDITION	SPECIFICATION
ENG SPEED	• Run engine and compare CONSULT-III value with the tachometer indication.	Almost the same speed as the tachometer indication

On Board Diagnosis Logic

INFOID:0000000001717413

DTC No.	Trouble diagnosis name	DTC detecting condition	Possible cause
P0335 0335	Crankshaft position sensor (POS) circuit	• The crankshaft position sensor (POS) signal is not detected by the ECM during the first few seconds of engine cranking. • The proper pulse signal from the crankshaft position sensor (POS) is not sent to ECM while the engine is running. • The crankshaft position sensor (POS) signal is not in the normal pattern during engine running.	• Harness or connectors (The sensor circuit is open or shorted) • Crankshaft position sensor (POS) • Signal plate

DTC Confirmation Procedure

INFOID:0000000001717414

NOTE:
If DTC Confirmation Procedure has been previously conducted, always perform the following before conducting the next step.
1. Turn ignition switch OFF and wait at least 10 seconds.
2. Turn ignition switch ON.
3. Turn ignition switch OFF and wait at least 10 seconds.

TESTING CONDITION:
Before performing the following procedure, confirm that battery voltage is more than 10.5V with ignition switch ON.

1. Crank engine for at least 2 seconds and run it for at least 5 seconds at idle speed.
2. Check 1st trip DTC.
3. If 1st trip DTC is detected, go to EC-321, "Diagnosis Procedure".

Wiring Diagram

INFOID:0000000001717415

EC-POS-01

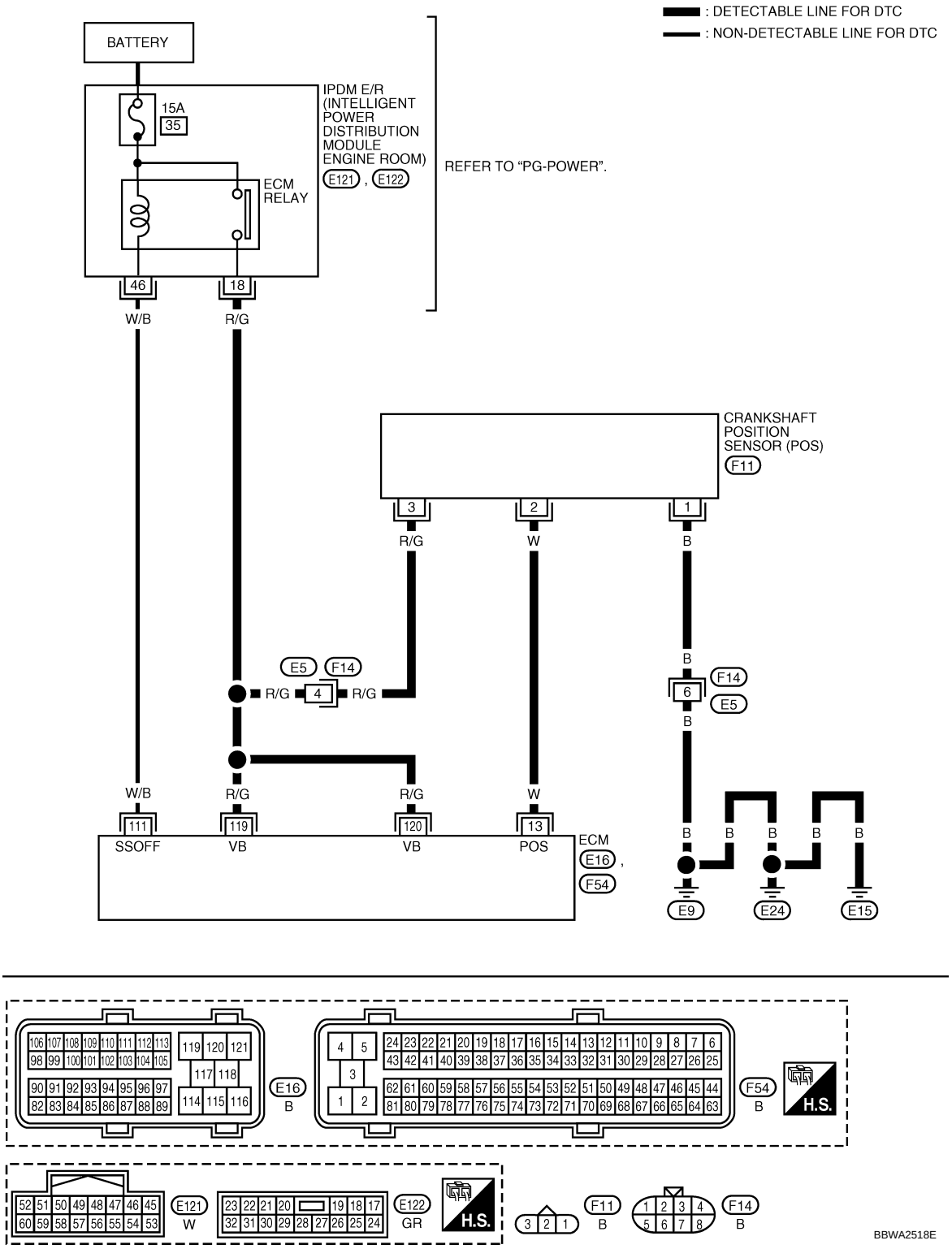

Specification data are reference values and are measured between each terminal and ground.
Pulse signal is measured by CONSULT-III.

CAUTION:

Do not use ECM ground terminals when measuring input/output voltage. Doing so may result in damage to the ECM's transistor. Use a ground other than ECM terminals, such as the ground.

TERMINAL NO.	WIRE COLOR	ITEM	CONDITION	DATA (DC Voltage)
13	W	Crankshaft position sensor (POS)	**[Engine is running]** • **Warm-up condition** • Idle speed **NOTE:** The pulse cycle changes depending on rpm at idle	Approximately 10V★ 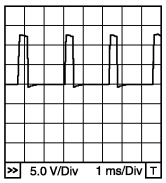 PBIB1041E
			[Engine is running] • Engine speed: 2,000 rpm	Approximately 10V★ 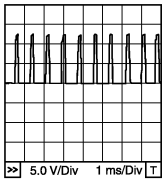 PBIB1042E
111	W/B	ECM relay (Self shut-off)	**[Engine is running]** **[Ignition switch: OFF]** • For a few seconds after turning ignition switch OFF	0 - 1.5V
			[Ignition switch: OFF] • More than a few seconds after turning ignition switch OFF	BATTERY VOLTAGE (11 - 14V)
119 120	R/G R/G	Power supply for ECM	**[Ignition switch: ON]**	BATTERY VOLTAGE (11 - 14V)

★: Average voltage for pulse signal (Actual pulse signal can be confirmed by oscilloscope.)

Diagnosis Procedure

INFOID:0000000001717416

1. CHECK GROUND CONNECTIONS

1. Turn ignition switch OFF.
2. Loosen and retighten three ground screws on the body. Refer to EC-138, "Ground Inspection".

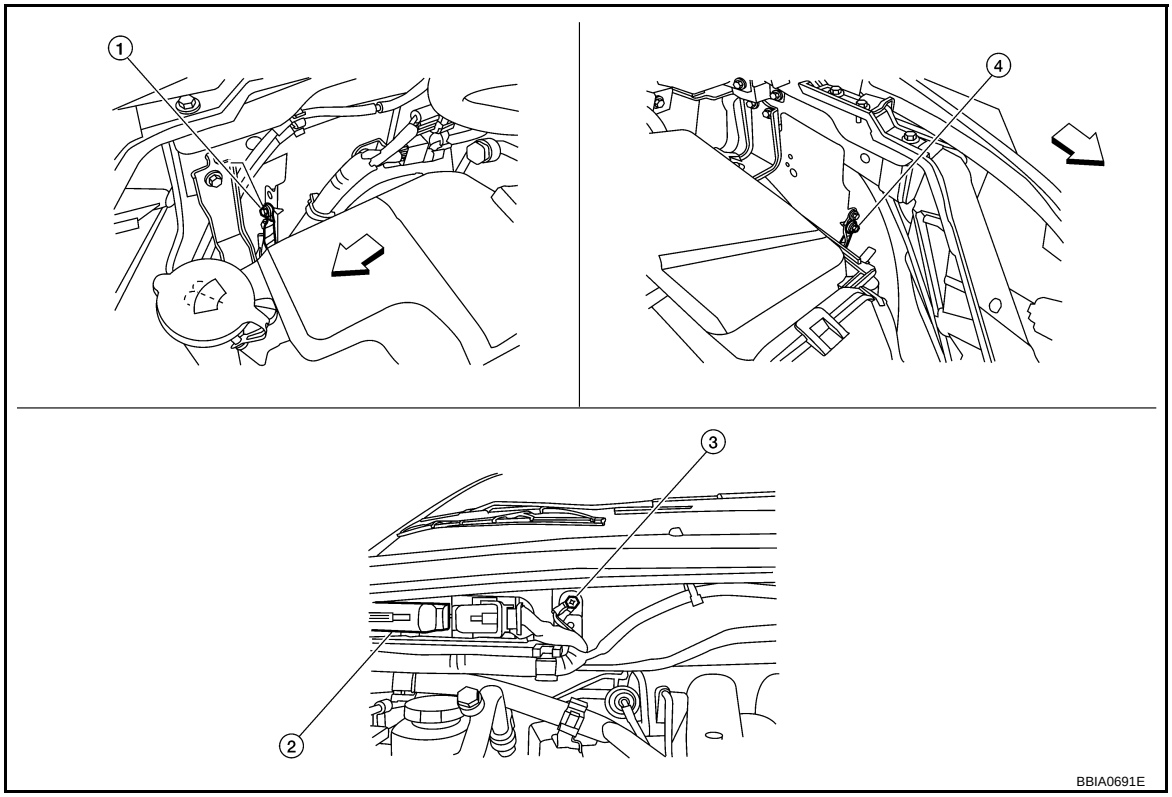

⇦: Vehicle front

1. Body ground E24
2. ECM
3. Body ground E9
4. Body ground E15

OK or NG

OK >> GO TO 2.
NG >> Repair or replace ground connections.

2. CHECK CRANKSHAFT POSITION (CKP) SENSOR (POS) POWER SUPPLY CIRCUIT

1. Disconnect crankshaft position (CKP) sensor (POS) harness connector.
- ⇦: Vehicle front
- Crankshaft position sensor (POS) (1)
(View from under the vehicle)
2. Turn ignition switch ON.

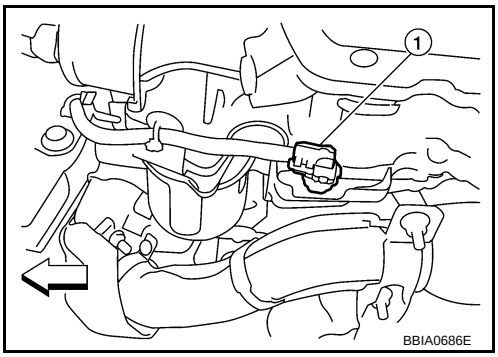

3. Check voltage between CKP sensor (POS) terminal 3 and ground with CONSULT-III or tester.

Voltage: Battery voltage

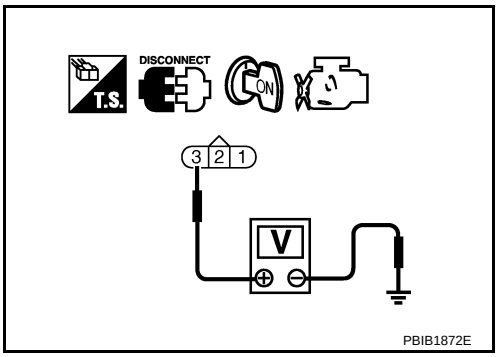

OK or NG

OK >> GO TO 4.
NG >> GO TO 3.

3. DETECT MALFUNCTIONING PART

Check the following.
- Harness connectors E5, F14
- Harness for open or short between crankshaft position sensor (POS) and ECM
- Harness for open or short between crankshaft position sensor (POS) and IPDM E/R

>> Repair open circuit or short to ground or short to power in harness or connectors.

4. CHECK CKP SENSOR (POS) GROUND CIRCUIT FOR OPEN AND SHORT

1. Turn ignition switch OFF.
2. Check harness continuity between CKP sensor (POS) terminal 1 and ground.
   Refer to Wiring Diagram.

Continuity should exist.

3. Also check harness for short to power.

OK or NG

OK >> GO TO 6.
NG >> GO TO 5.

5. DETECT MALFUNCTIONING PART

Check the following.
- Harness connectors E5, F14
- Harness for open or short between crankshaft position sensor (POS) and ground

>> Repair open circuit or short to power in harness or connectors.

6. CHECK CKP SENSOR (POS) INPUT SIGNAL CIRCUIT FOR OPEN AND SHORT

1. Disconnect ECM harness connector.
2. Check harness continuity between ECM terminal 13 and CKP sensor (POS) terminal 2.
   Refer to Wiring Diagram.

Continuity should exist.

3. Also check harness for short to ground and short to power.

OK or NG

OK >> GO TO 7.
NG >> Repair open circuit or short to ground or short to power in harness or connectors.

7. CHECK CRANKSHAFT POSITION SENSOR (POS)

Refer to EC-324, "Component Inspection".

OK or NG

OK >> GO TO 8.
NG >> Replace crankshaft position sensor (POS).

8. CHECK GEAR TOOTH

Visually check for chipping signal plate gear tooth.

OK or NG

OK >> GO TO 9.
NG >> Replace the signal plate.

9. CHECK INTERMITTENT INCIDENT

Refer to EC-130.

>> **INSPECTION END**

Component Inspection

INFOID:0000000001717417

CRANKSHAFT POSITION SENSOR (POS)

1. Loosen the fixing bolt of the sensor.
2. Disconnect crankshaft position sensor (POS) harness connector.
3. Remove the sensor.
4. Visually check the sensor for chipping.

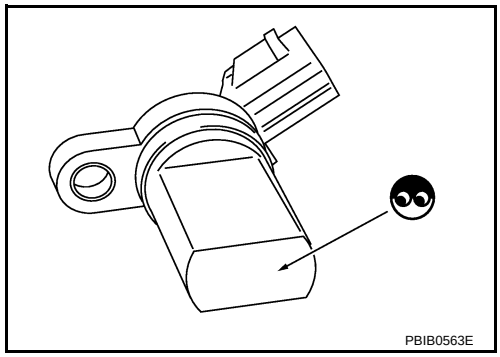

5. Check resistance as shown in the figure.

Terminal No. (Polarity)	Resistance Ω [at 25°C (77°F)]
1 (+) - 2 (-)	Except 0 or ∞
1 (+) - 3 (-)	
2 (+) - 3 (-)	

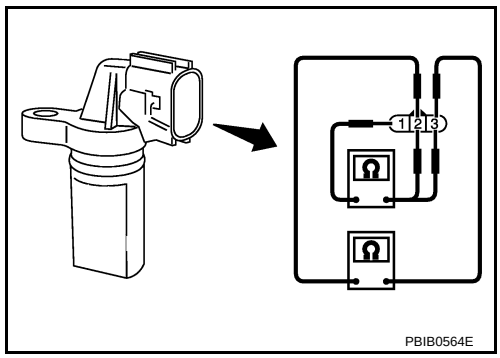

Removal and Installation

INFOID:0000000001717418

CRANKSHAFT POSITION SENSOR (POS)

Refer to EM-29.

DTC P0340, P0345 CMP SENSOR (PHASE)

Component Description

INFOID:0000000001717419

The camshaft position sensor (PHASE) senses the retraction of camshaft (INT) to identify a particular cylinder. The camshaft position sensor (PHASE) senses the piston position.
When the crankshaft position sensor (POS) system becomes inoperative, the camshaft position sensor (PHASE) provides various controls of engine parts instead, utilizing timing of cylinder identification signals.
The sensor consists of a permanent magnet and Hall IC.
When engine is running, the high and low parts of the teeth cause the gap with the sensor to change.
The changing gap causes the magnetic field near the sensor to change.
Due to the changing magnetic field, the voltage from the sensor changes.
ECM receives the signals as shown in the figure.

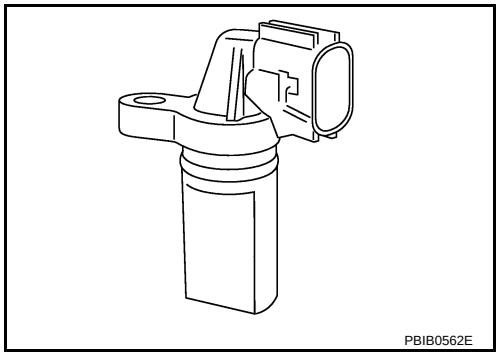

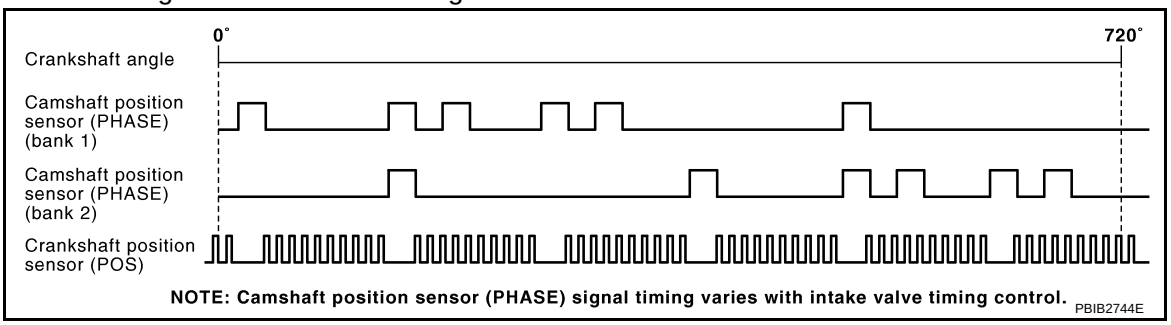

On Board Diagnosis Logic

INFOID:0000000001717420

DTC No.	Trouble diagnosis name	DTC detecting condition	Possible cause
P0340 0340 (Bank 1) P0345 0345 (Bank 2)	Camshaft position sensor (PHASE) circuit	• The cylinder No. signal is not sent to ECM for the first few seconds during engine cranking. • The cylinder No. signal is not sent to ECM during engine running. • The cylinder No. signal is not in the normal pattern during engine running.	• Harness or connectors (The sensor circuit is open or shorted) • Camshaft position sensor (PHASE) • Camshaft (Intake) • Starter motor (Refer to SC-10.) • Starting system circuit (Refer to SC-10.) • Dead (Weak) battery

DTC Confirmation Procedure

INFOID:0000000001717421

NOTE:
If DTC Confirmation Procedure has been previously conducted, always perform the following before conducting the next step.
1. Turn ignition switch OFF and wait at least 10 seconds.
2. Turn ignition switch ON.
3. Turn ignition switch OFF and wait at least 10 seconds.

TESTING CONDITION:
Before performing the following procedure, confirm that battery voltage is more than 10.5V with ignition switch ON.

1. Crank engine for at least 2 seconds and run it for at least 5 seconds at idle speed.
2. Check 1st trip DTC.
3. If 1st trip DTC is detected, go to EC-329, "Diagnosis Procedure".
   If 1st trip DTC is not detected, go to next step.
4. Maintaining engine speed at more than 800 rpm for at least 5 seconds.
5. Check 1st trip DTC.
6. If 1st trip DTC is detected, go to EC-329, "Diagnosis Procedure".

Wiring Diagram

INFOID:0000000001717422

BANK 1

EC-PHSB1-01

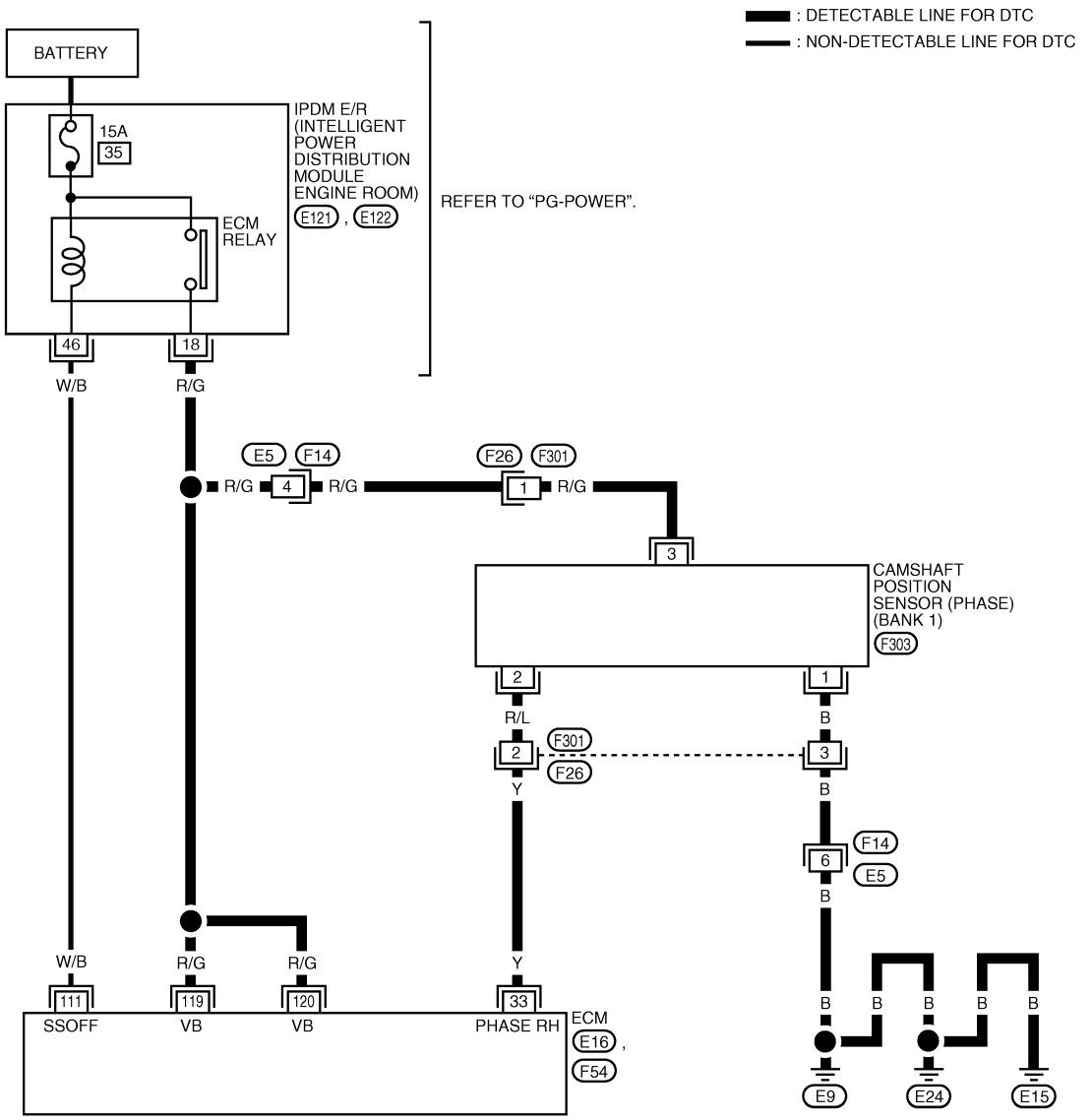

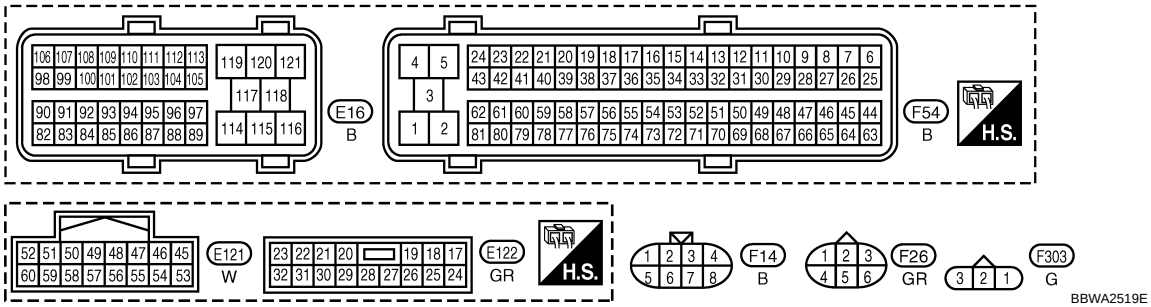

Specification data are reference values and are measured between each terminal and ground.
Pulse signal is measured by CONSULT-III.

CAUTION:

Do not use ECM ground terminals when measuring input/output voltage. Doing so may result in damage to the ECM's transistor. Use a ground other than ECM terminals, such as the ground.

TERMINAL NO.	WIRE COLOR	ITEM	CONDITION	DATA (DC Voltage)
33	Y	Camshaft position sensor (PHASE) (Bank 1)	**[Engine is running]** • **Warm-up condition** • Idle speed **NOTE:** The pulse cycle changes depending on rpm at idle	1.0 - 4.0V★ 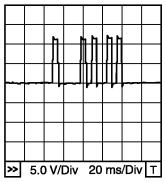 PBIB1039E
			[Engine is running] • Engine speed: 2,000 rpm	1.0 - 4.0V★ 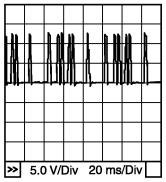 PBIB1040E
111	W/B	ECM relay (Self shut-off)	**[Engine is running]** **[Ignition switch: OFF]** • For a few seconds after turning ignition switch OFF	0 - 1.5V
			[Ignition switch: OFF] • More than a few seconds after turning ignition switch OFF	BATTERY VOLTAGE (11 - 14V)
119 120	R/G R/G	Power supply for ECM	**[Ignition switch: ON]**	BATTERY VOLTAGE (11 - 14V)

★: Average voltage for pulse signal (Actual pulse signal can be confirmed by oscilloscope.)

EC-PHSB2-01

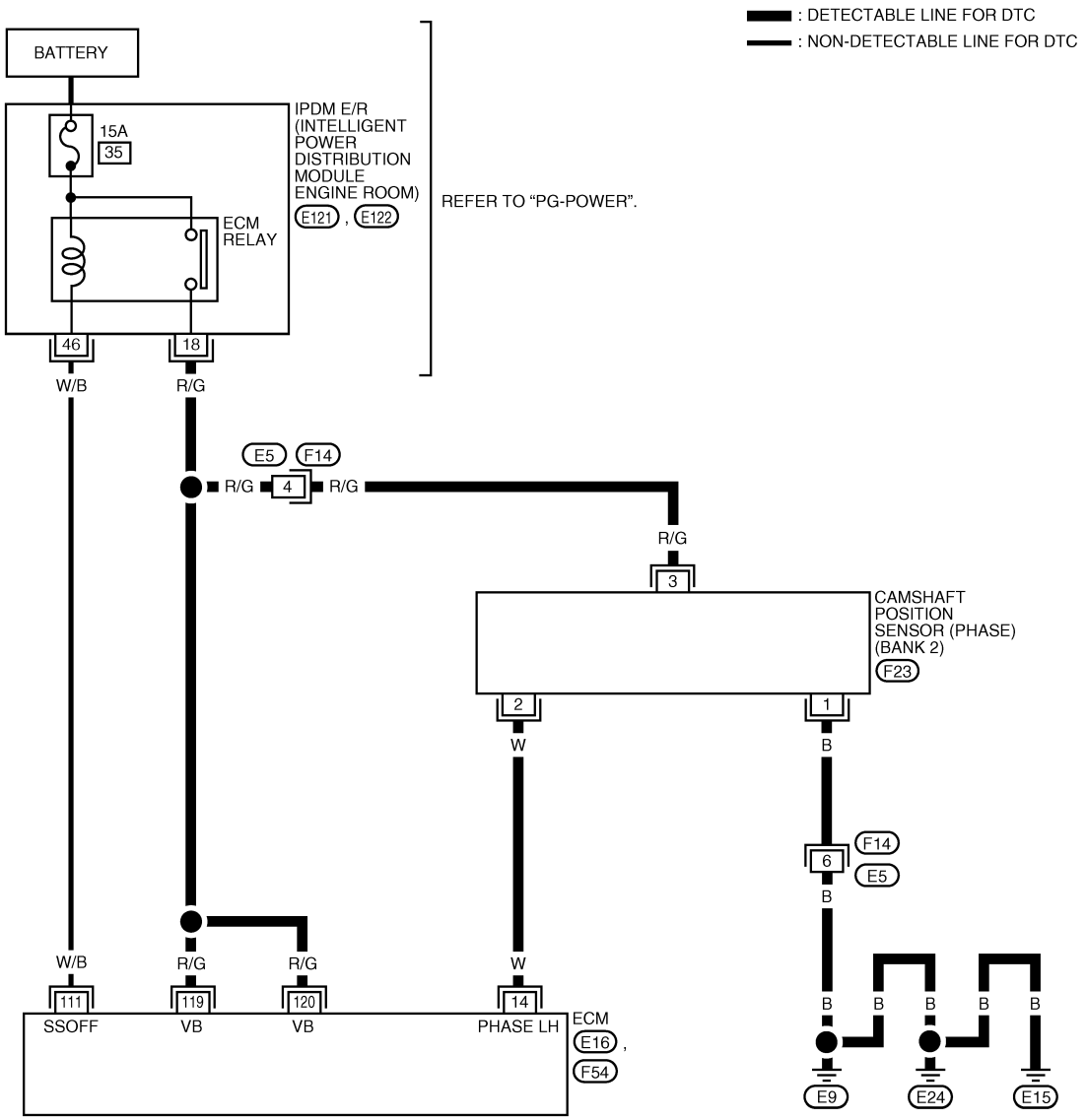

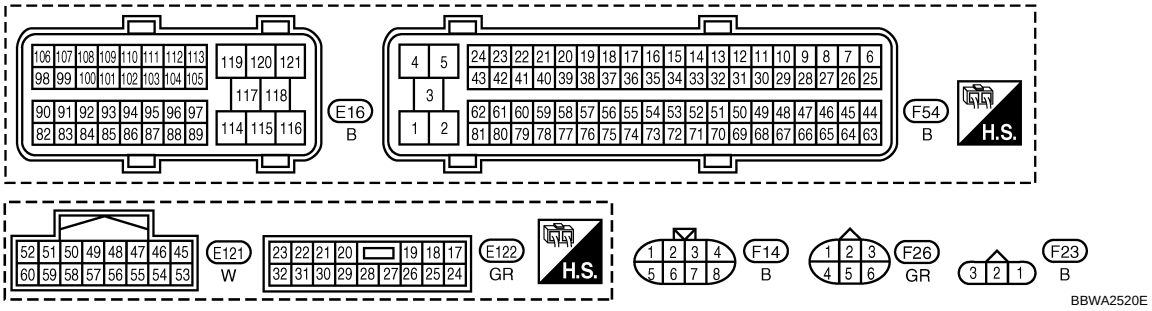

Specification data are reference values and are measured between each terminal and ground.
Pulse signal is measured by CONSULT-III.

CAUTION:

Do not use ECM ground terminals when measuring input/output voltage. Doing so may result in damage to the ECM's transistor. Use a ground other than ECM terminals, such as the ground.

TERMINAL NO.	WIRE COLOR	ITEM	CONDITION	DATA (DC Voltage)
14	W	Camshaft position sensor (PHASE) (Bank 2)	**[Engine is running]** • **Warm-up condition** • Idle speed **NOTE:** The pulse cycle changes depending on rpm at idle	1.0 - 4.0V★ 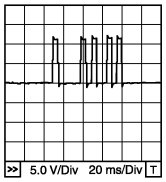 PBIB1039E
			[Engine is running] • Engine speed: 2,000 rpm	1.0 - 4.0V★ 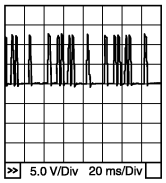 PBIB1040E
111	W/B	ECM relay (Self shut-off)	**[Engine is running]** **[Ignition switch: OFF]** • For a few seconds after turning ignition switch OFF	0 - 1.5V
			[Ignition switch: OFF] • More than a few seconds after turning ignition switch OFF	BATTERY VOLTAGE (11 - 14V)
119 120	R/G R/G	Power supply for ECM	**[Ignition switch: ON]**	BATTERY VOLTAGE (11 - 14V)

★: Average voltage for pulse signal (Actual pulse signal can be confirmed by oscilloscope.)

Diagnosis Procedure

INFOID:0000000001717423

1. CHECK STARTING SYSTEM

Turn ignition switch to START position.

Does the engine turn over?
Does the starter motor operate?

Yes or No

Yes >> GO TO 2.
No >> Check starting system. (Refer to SC-10.)

2. CHECK GROUND CONNECTIONS

1. Turn ignition switch OFF.
2. Loosen and retighten three ground screws on the body. Refer to EC-138, "Ground Inspection".

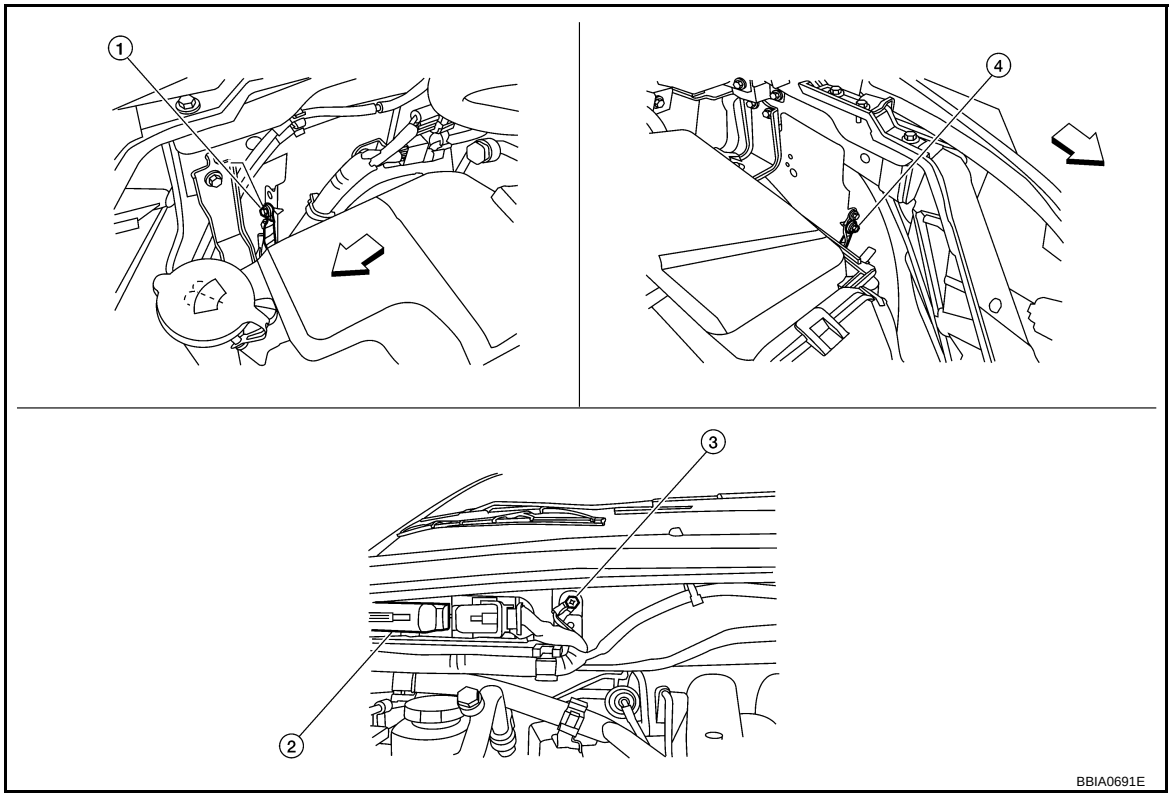

⇦: Vehicle front

1. Body ground E24
2. ECM
3. Body ground E9
4. Body ground E15

OK or NG

OK >> GO TO 3.
NG >> Repair or replace ground connections.

3. CHECK CAMSHAFT POSITION (CMP) SENSOR (PHASE) POWER SUPPLY CIRCUIT

1. Disconnect camshaft position (CMP) sensor (PHASE) harness connector.

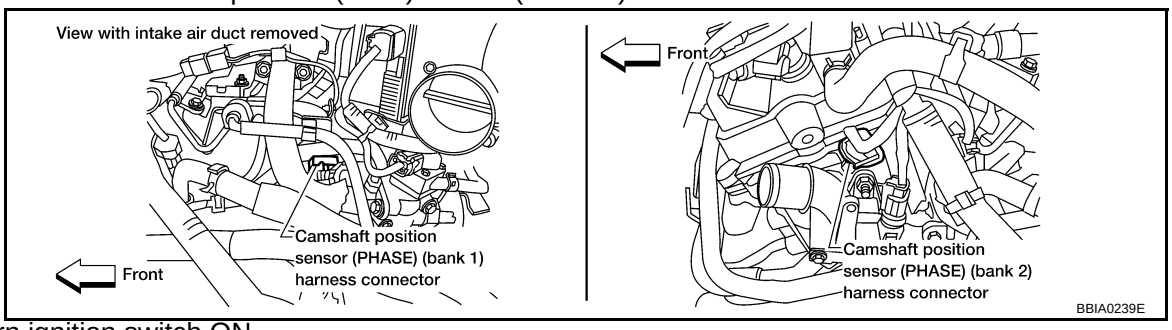

2. Turn ignition switch ON.
3. Check voltage between CMP sensor (PHASE) terminal 3 and ground with CONSULT-III or tester.

Voltage: Battery voltage

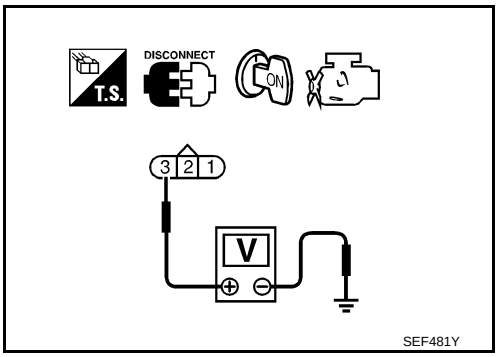

OK or NG

OK >> GO TO 5.
NG >> GO TO 4.

4. DETECT MALFUNCTIONING PART

Check the following.
- Harness connectors E5, F14
- Harness connectors F26, F301 (bank 1)
- Harness for open or short between camshaft position sensor (PHASE) and ECM
- Harness for open or short between camshaft position sensor (PHASE) and IPDM E/R

>> Repair open circuit or short to ground or short to power in harness or connectors.

5. CHECK CMP SENSOR (PHASE) GROUND CIRCUIT FOR OPEN AND SHORT

1. Turn ignition switch OFF.
2. Check harness continuity between CMP sensor (PHASE) terminal 1 and ground.
   Refer to Wiring Diagram.

Continuity should exist.

3. Also check harness for short to power.

OK or NG

OK >> GO TO 7.
NG >> GO TO 6.

6. DETECT MALFUNCTIONING PART

Check the following.
- Harness connectors E5, F14
- Harness connectors F26, F301 (bank 1)
- Harness for open or short between CMP sensor (PHASE) and ground

>> Repair open circuit or short to power in harness or connectors.

7. CHECK CMP SENSOR (PHASE) INPUT SIGNAL CIRCUIT FOR OPEN AND SHORT

1. Disconnect ECM harness connector.
2. Check harness continuity between ECM terminal 33 (bank 1) or 14 (bank2) and CMP sensor (PHASE) terminal 2.
   Refer to Wiring Diagram.

Continuity should exist.

3. Also check harness for short to ground and short to power.

OK or NG

OK >> GO TO 9.
NG >> GO TO 8.

8. DETECT MALFUNCTIONING PART

Check the following.
- Harness connectors F26, F301 (bank 1)
- Harness for open or short between camshaft position sensor (PHASE) and ECM

>> Repair open circuit or short to ground or short to power in harness or connectors.

9. CHECK CAMSHAFT POSITION SENSOR (PHASE)

Refer to EC-332, "Component Inspection".

OK or NG

OK >> GO TO 10.
NG >> Replace camshaft position sensor (PHASE).

10. CHECK CAMSHAFT (INT)

Check the following.

- Accumulation of debris to the signal plate of camshaft rear end
- Chipping signal plate of camshaft rear end

OK or NG

OK >> GO TO 11.
NG >> Remove debris and clean the signal plate of camshaft rear end or replace camshaft.

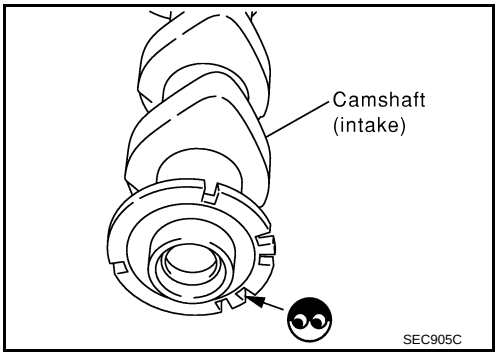

11. CHECK INTERMITTENT INCIDENT

Refer to EC-130.

>> **INSPECTION END**

Component Inspection

INFOID:0000000001717424

CAMSHAFT POSITION SENSOR (PHASE)

1. Loosen the fixing bolt of the sensor.
2. Disconnect camshaft position sensor (PHASE) harness connector.
3. Remove the sensor.
4. Visually check the sensor for chipping.

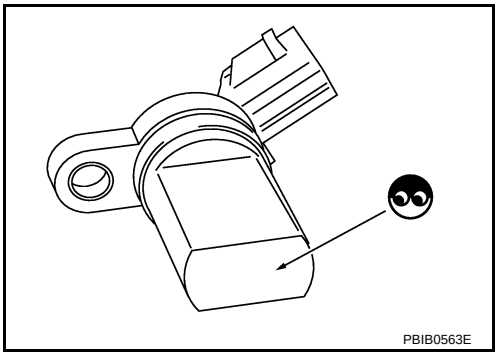

5. Check resistance as shown in the figure.

Terminal No. (Polarity)	Resistance Ω [at 25°C (77°F)]
1 (+) - 2 (-)	Except 0 or ∞
1 (+) - 3 (-)	
2 (+) - 3 (-)	

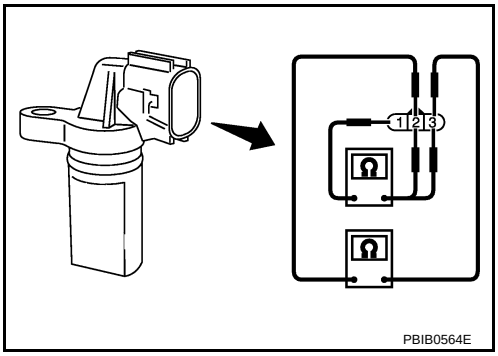

Removal and Installation

INFOID:0000000001717425

CAMSHAFT POSITION SENSOR (PHASE)

Refer to EM-76.

DTC P0400 EGR FUNCTION

Description

INFOID:0000000001717426

SYSTEM DESCRIPTION

Sensor	Input Signal to ECM	ECM function	Actuator
Camshaft position sensor (PHASE)	Engine speed*2 Piston position	EGR volume control	EGR volume control valve
Crankshaft position sensor (POS)			
Mass air flow sensor	Amount of intake air		
Engine coolant temperature sensor	Engine coolant temperature		
Throttle position sensor	Throttle position		
Accelerator pedal position sensor	Accelerator pedal position		
Park/neutral position (PNP) switch	Gear position		
Battery	Battery voltage*2		
Air conditioner switch	Air conditioner operation *1		
Power steering pressure sensor	Power steering operation		
Electrical load	Electrical load signal *1		
Wheel sensor	Vehicle speed *1		
TCM	Gear position, shifting signal *1		

*1: This signal is sent to the ECM through CAN communication line.

*2: ECM determines the start signal status by the signals of engine speed and battery voltage.

This system controls flow rate of EGR led from exhaust manifold to intake manifold. The opening of the EGR by-pass passage in the EGR volume control valve changes to control the flow rate. A built-in step motor moves the valve in steps corresponding to the ECM output pulses. The opening of the valve varies for optimum engine control. The optimum value stored in the ECM is determined by considering various engine conditions. The EGR volume control valve remains closed under the following conditions.

- Engine stopped
- Engine starting
- Engine idling
- Low engine coolant temperature
- Excessively high engine coolant temperature
- High engine speed
- Wide open throttle
- Low battery voltage

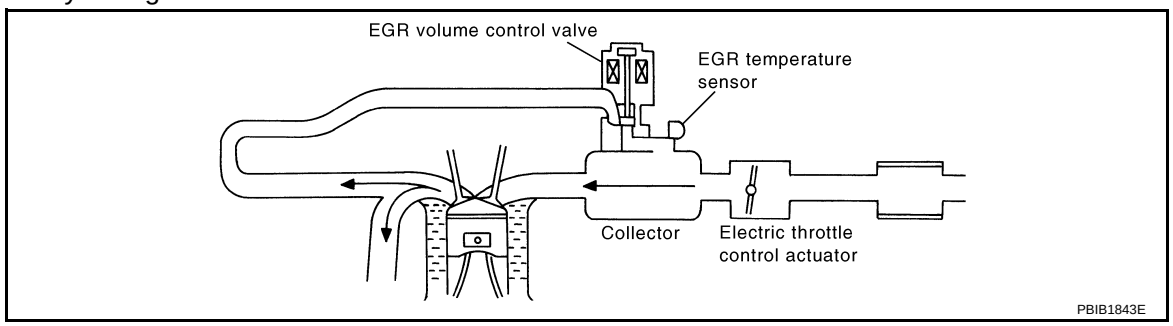

COMPONENT DESCRIPTION

EGR Volume Control Valve

The EGR volume control valve uses a step motor to control the flow rate of EGR from exhaust manifold. This motor has four winding phases. It operates according to the output pulse signal of the ECM. Two windings are turned ON and OFF in sequence. Each time an ON pulse is issued, the valve opens or closes, changing the flow rate. When no change in the flow rate is needed, the ECM does not issue the pulse signal. A certain voltage signal is issued so that the valve remains at that particular opening.

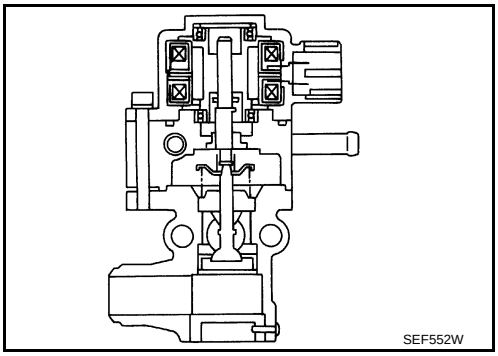

EGR Temperature Sensor

The EGR temperature sensor detects temperature changes in the EGR passageway. When the EGR volume control valve opens, hot exhaust gases flow, and the temperature in the passageway changes. The EGR temperature sensor is a thermistor that modifies a voltage signal sent from the ECM. This modified signal then returns to the ECM as an input signal. As the temperature increases, EGR temperature sensor resistance decreases.

This sensor is not directly used to control the engine system. It is used only for the on board diagnosis.

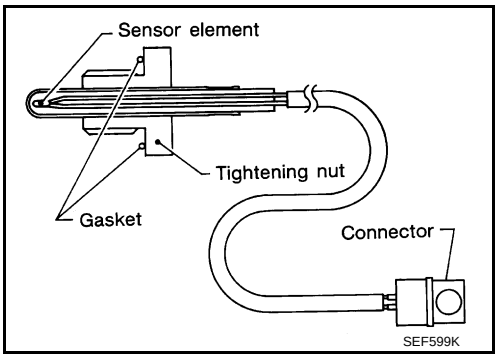

<Reference data>

EGR temperature °C (°F)	Voltage* V	Resistance MΩ
0 (32)	4.59	0.73 - 0.88
50 (122)	2.32	0.074 - 0.082
100 (212)	0.62	0.011 - 0.014

*: This data is reference value and is measured between ECM terminal 54 (EGR temperature sensor) and ground.

CAUTION:

Do not use ECM ground terminals when measuring input/output voltage. Doing so may damage the ECM's transistor. Use a ground other than ECM terminals, such as the ground.

When EGR system is operating.

Voltage: 0 - 1.5V

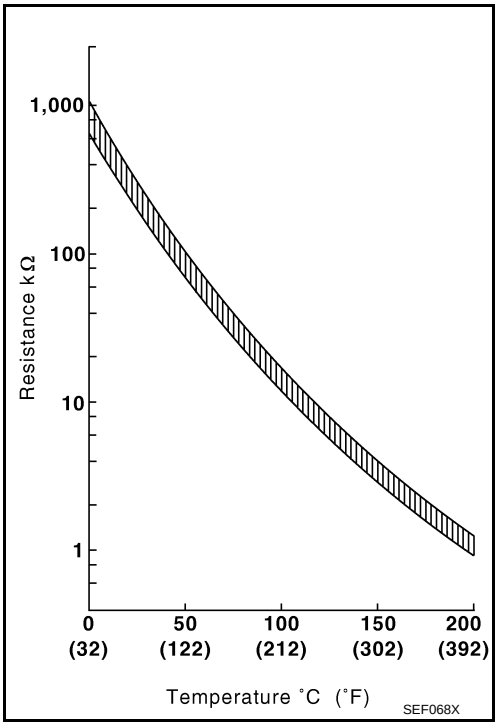

CONSULT-III Reference Value in Data Monitor Mode

INFOID:0000000001717427

Specification data are reference values.

MONITOR ITEM	CONDITION		SPECIFICATION
EGR TEMP SEN	• Engine: After warming up		Less than 4.5V
EGR VOL CON/V	• Engine: After warming up • Air conditioner switch: OFF • Shift lever: P or N • No load	Idle	0 step
		Revving engine up to 3,000 rpm quickly	10 - 55 step

On Board Diagnosis Logic

INFOID:0000000001717428

If the absence of EGR flow is detected by EGR temperature sensor under the condition that calls for EGR, a low-flow malfunction is diagnosed.

DTC No.	Trouble diagnosis name	DTC detecting condition	Possible cause
P0400 0400	EGR function (Close)	No EGR flow is detected under the condition that calls for EGR.	• Harness or connectors (The EGR volume control valve circuit is open or shorted.) • EGR volume control valve stuck closed • Dead (Weak) battery • EGR passage clogged • EGR temperature sensor and circuit • Exhaust gas leaks

DTC Confirmation Procedure

INFOID:0000000001717429

CAUTION:
Always drive vehicle at a safe speed.
NOTE:
- If DTC Confirmation Procedure has been previously conducted, always perform the following before conducting the next step.

1. Turn ignition switch OFF and wait at least 10 seconds.
2. Turn ignition switch ON.
3. Turn ignition switch OFF and wait at least 10 seconds.

- P0400 will not be displayed at “SELF-DIAG RESULTS” mode with CONSULT-III even though DTC work support test result is NG.

TESTING CONDITION:
- **Before performing the following procedure, confirm battery voltage is more than 10V at idle, then stop engine immediately.**
- **For best results, perform the test at a temperature of 5°C (41°F) or higher.**

WITH CONSULT-III

1. Turn ignition switch OFF, wait at least 10 seconds and then turn ON.
2. Check “COOLAN TEMP/S” in “DATA MONITOR” mode with CONSULT-III.
   Confirm “COOLAN TEMP/S” value is within the range listed below.
   COOLAN TEMP/S: Less than 40°C (104°F)
   If the value is out of range, park the vehicle in a cool place and allow the engine temperature to stabilize. Do not attempt to lower the engine coolant temperature with a fan or means other than ambient air. Doing so may produce an inaccurate diagnostic result.
3. Start engine and let it idle monitoring “COOLAN TEMP/S” value. When the “COOLAN TEMP/S” value reaches 70°C (158°F), immediately go to the next step.
4. Select “EGR SYSTEM P0400” of “EGR SYSTEM” in “DTC WORK SUPPORT” mode with CONSULT-III.
5. Touch “START”.
6. Accelerate vehicle to a speed of 40 km/h (25 MPH) once and then stop vehicle with engine running.
   If “COMPLETED” appears on CONSULT-III screen, go to step 8.
   If “COMPLETED” does not appear on CONSULT-III screen, go to the following step.
7. When the following conditions are met, “TESTING” will be displayed on the CONSULT-III screen. Maintain the conditions until “TESTING” changes to “COMPLETED”. (It will take approximately 30 seconds or more.)

ENG SPEED	1,200 - 2,800 rpm
VHCL SPEED SE	More than 10 km/h (6 MPH)
B/FUEL SCHDL	4 - 9 msec
Shift lever	Suitable position

   If “TESTING” is not displayed after 5 minutes, retry from step 2.
8. Make sure that “OK” is displayed after touching “SELF-DIAG RESULTS”. If “NG” is displayed, refer to EC-338, "Diagnosis Procedure".

WITH GST

1. Turn ignition switch OFF, wait at least 10 seconds and then turn ON.
2. Check engine coolant temperature in Service $01 with GST.
   Engine coolant temperature: Less than 40°C (104°F)
   If the value is out of range, park the vehicle in a cool place and allow the engine temperature to stabilize. Do not attempt to lower the coolant temperature with a fan or means other than ambient air. Doing so may produce an inaccurate diagnostic result.
3. Start engine and let it idle monitoring the engine coolant temperature value. When the engine coolant temperature reaches 70°C (158°F), immediately go to the next step.
4. Maintain the following conditions for at least 1 minute.
   Engine speed: 1,200 - 2,800 rpm
   Vehicle speed: More than 10 km/h (6 MPH)
   Shift lever: Suitable position
5. Stop vehicle.
6. Turn ignition switch OFF, wait at least 10 seconds and then turn ON.
7. Select Service $07 with GST.
8. Check 1st trip DTC.
9. If 1st trip DTC is detected, go to EC-338, "Diagnosis Procedure".

Wiring Diagram

INFOID:0000000001717430

EC-EGRC1-01

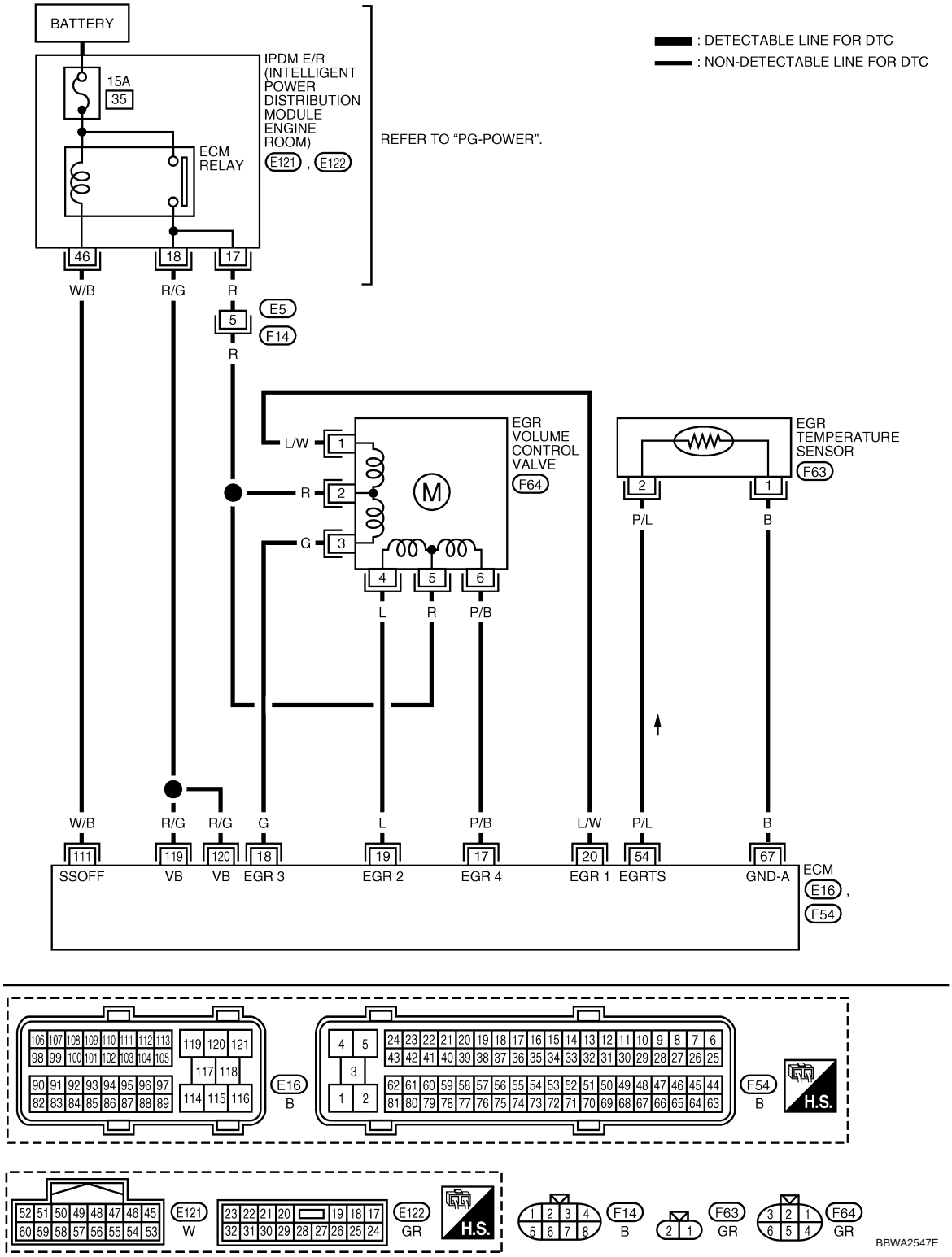

Specification data are reference values and are measured between each terminal and ground.

CAUTION:

Do not use ECM ground terminals when measuring input/output voltage. Doing so may result in damage to the ECM's transistor. Use a ground other than ECM terminals, such as the ground.

TERMINAL NO.	WIRE COLOR	ITEM	CONDITION	DATA (DC Voltage)
17 18 19 20	P/B G L L/W	EGR volume control valve	**[Engine is running]** • Idle speed	0.1 - 14V
54	P/L	EGR temperature sensor	**[Ignition switch: ON]**	Less than 4.5V
			[Engine is running] • **Warm-up condition** • EGR system: Operating	0 - 1.5V
67	B	Sensor ground	**[Engine is running]** • **Warm-up condition** • Idle speed	Approximately 0V
111	W/B	ECM relay (Self shut-off)	**[Engine is running]** **[Ignition switch: OFF]** • For a few seconds after turning ignition switch OFF	0 - 1.5V
			[Ignition switch: OFF] • More than a few seconds after turning ignition switch OFF	BATTERY VOLTAGE (11 - 14V)
119 120	R/G R/G	Power supply for ECM	**[Ignition switch: ON]**	BATTERY VOLTAGE (11 - 14V)

Diagnosis Procedure

INFOID:0000000001717431

1. CHECK EXHAUST SYSTEM

1. Start engine.
2. Check exhaust pipes and muffler for leaks.

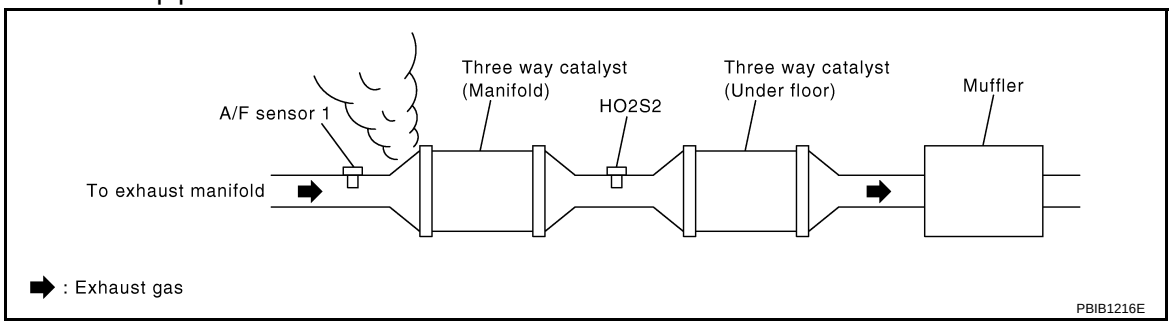

OK or NG

OK >> GO TO 2.
NG >> Repair or replace exhaust system.

2. CHECK EGR VOLUME CONTROL VALVE POWER SUPPLY CIRCUIT

1. Turn ignition switch OFF.
2. Disconnect EGR volume control valve harness connector.
3. Turn ignition switch ON.

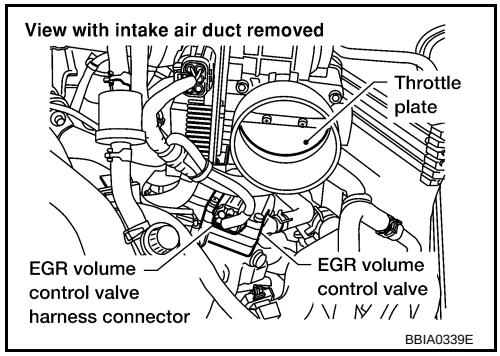

4. Check voltage between EGR volume control valve terminals 2, 5 and ground with CONSULT-III or tester.

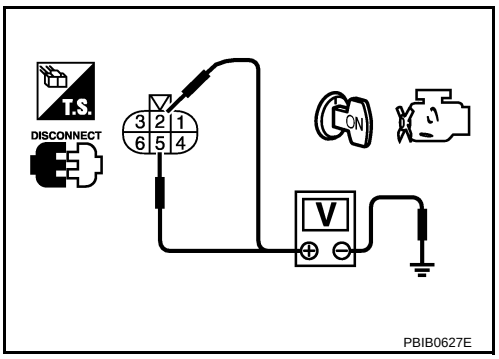

Voltage: Battery voltage

OK or NG

OK >> GO TO 4.
NG >> GO TO 3.

3. DETECT MALFUNCTIONING PART

Check the following.
- Harness connectors E5, F14
- Harness for open or short between EGR volume control valve and IPDM E/R

>> Repair harness or connectors.

4. CHECK EGR VOLUME CONTROL VALVE OUTPUT SIGNAL CIRCUIT FOR OPEN AND SHORT

1. Turn ignition switch OFF.
2. Disconnect ECM harness connector.
3. Check harness continuity between ECM terminals and EGR volume control valve terminals as follows. Refer to Wiring Diagram.

ECM terminal	EGR volume control valve
17	6
18	3
19	4
20	1

Continuity should exist.

4. Also check harness for short to ground and short to power.

OK or NG

OK >> GO TO 5.
NG >> Repair open circuit or short to ground or short to power in harness or connectors.

5. CHECK EGR PASSAGE

Check EGR passage for clogging and cracks.

OK or NG

OK >> GO TO 6.
NG >> Repair or replace EGR passage.

6. CHECK EGR VOLUME CONTROL VALVE

Refer to EC-345, "Component Inspection".

OK or NG

OK >> GO TO 7.
NG >> Replace EGR volume control valve.

7. CHECK EGR TEMPERATURE SENSOR AND CIRCUIT

Perform DTC Confirmation Procedure for DTC P0405, P0406. Refer to EC-347, "DTC Confirmation Procedure".

OK or NG

OK >> GO TO 8.
NG >> Repair or replace malfunctioning part.

8. CHECK INTERMITTENT INCIDENT

Refer to EC-130.

>> **INSPECTION END**

DTC P0403 EGR VOLUME CONTROL VALVE

Description

INFOID:0000000001717432

SYSTEM DESCRIPTION

Sensor	Input Signal to ECM	ECM function	Actuator
Camshaft position sensor (PHASE)	Engine speed*2 Piston position	EGR volume control	EGR volume control valve
Crankshaft position sensor (POS)			
Mass air flow sensor	Amount of intake air		
Engine coolant temperature sensor	Engine coolant temperature		
Throttle position sensor	Throttle position		
Accelerator pedal position sensor	Accelerator pedal position		
Park/neutral position (PNP) switch	Gear position		
Battery	Battery voltage*2		
Air conditioner switch	Air conditioner operation *1		
Power steering pressure sensor	Power steering operation		
Electrical load	Electrical load signal *1		
Wheel sensor	Vehicle speed *1		
TCM	Gear position, shifting signal *1		

*1: This signal is sent to the ECM through CAN communication line.

*2: ECM determines the start signal status by the signals of engine speed and battery voltage.

This system controls flow rate of EGR led from exhaust manifold to intake manifold. The opening of the EGR by-pass passage in the EGR volume control valve changes to control the flow rate. A built-in step motor moves the valve in steps corresponding to the ECM output pulses. The opening of the valve varies for optimum engine control. The optimum value stored in the ECM is determined by considering various engine conditions. The EGR volume control valve remains close under the following conditions.

- Engine stopped
- Engine starting
- Engine idling
- Low engine coolant temperature
- Excessively high engine coolant temperature
- High engine speed
- Wide open throttle
- Low battery voltage

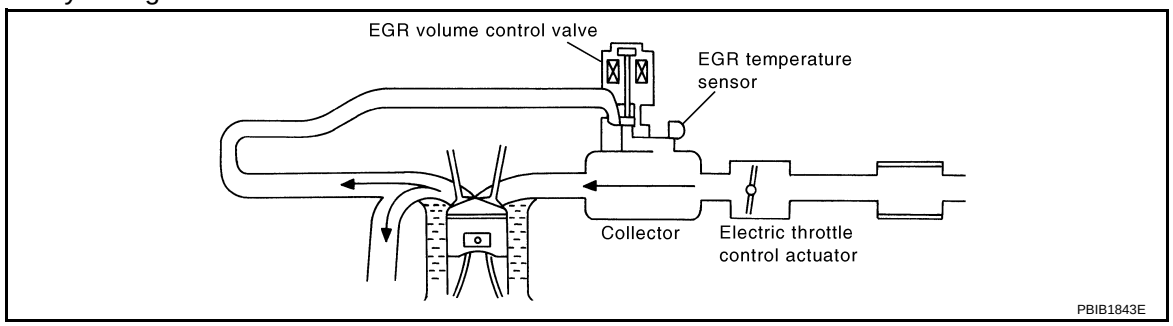

COMPONENT DESCRIPTION

EGR Volume Control Valve

The EGR volume control valve uses a step motor to control the flow rate of EGR from exhaust manifold. This motor has four winding phases. It operates according to the output pulse signal of the ECM. Two windings are turned ON and OFF in sequence. Each time an ON pulse is issued, the valve opens or closes, changing the flow rate. When no change in the flow rate is needed, the ECM does not issue the pulse signal. A certain voltage signal is issued so that the valve remains at that particular opening.

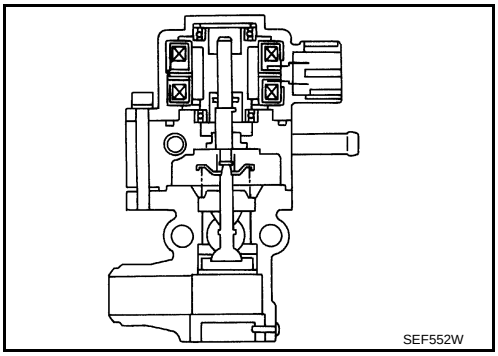

CONSULT-III Reference Value in Data Monitor Mode

INFOID:0000000001717433

Specification data are reference values.

MONITOR ITEM	CONDITION		SPECIFICATION
EGR VOL CON/V	• Engine: After warming up • Air conditioner switch: OFF • Shift lever: P or N • No load	Idle	0 step
		Revving engine up to 3,000 rpm quickly	10 - 55 step

On Board Diagnosis Logic

INFOID:0000000001717434

This self-diagnosis has the one trip detection logic.

DTC No.	Trouble diagnosis name	DTC detecting condition	Possible cause
P0403 0403	EGR volume control valve circuit	An improper voltage signal is sent to ECM through the valve	• Harness or connectors (The EGR volume control valve circuit is open or shorted.) • EGR volume control valve

DTC Confirmation Procedure

INFOID:0000000001717435

NOTE:
If DTC Confirmation Procedure has been previously conducted, always perform the following before conducting the next step.
1. Turn ignition switch OFF and wait at least 10 seconds.
2. Turn ignition switch ON.
3. Turn ignition switch OFF and wait at least 10 seconds.

TESTING CONDITION:
Before performing the following procedure, confirm that battery voltage is more than 10V at idle.

1. Start engine and warm it up to normal operating temperature.
2. Rev engine from idle to 2,000 rpm for 10 times.
3. Check DTC.
4. If DTC is detected, go to EC-344, "Diagnosis Procedure".

Wiring Diagram

INFOID:0000000001717436

EC-EGVC/V-01

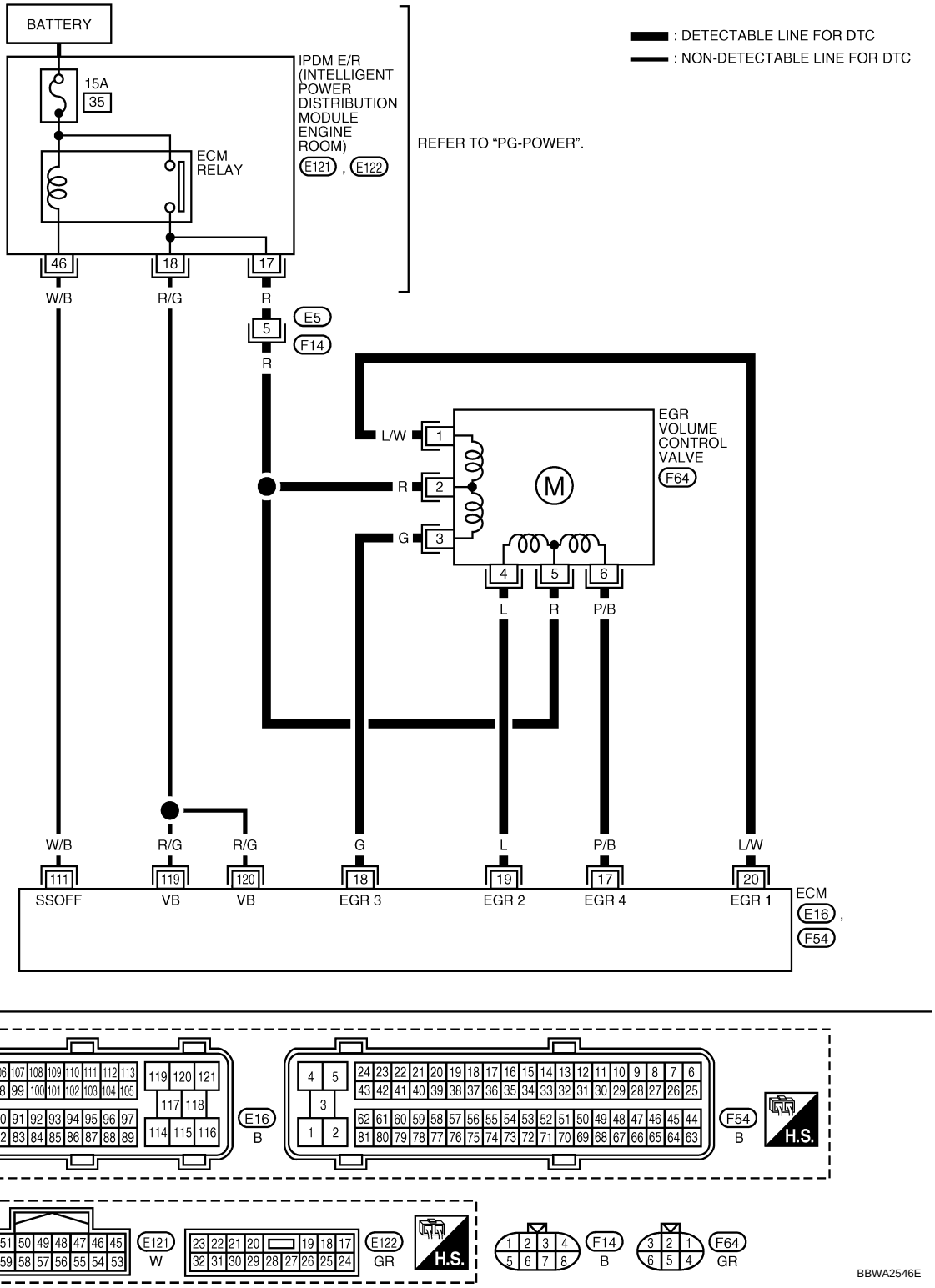

Specification data are reference values and are measured between each terminal and ground.

CAUTION:

Do not use ECM ground terminals when measuring input/output voltage. Doing so may result in damage to the ECM's transistor. Use a ground other than ECM terminals, such as the ground.

TERMINAL NO.	WIRE COLOR	ITEM	CONDITION	DATA (DC Voltage)
17 18 19 20	P/B G L L/W	EGR volume control valve	**[Engine is running]** • Idle speed	0.1 - 14V
111	W/B	ECM relay (Self shut-off)	**[Engine is running]** **[Ignition switch: OFF]** • For a few seconds after turning ignition switch OFF	0 - 1.5V
			[Ignition switch: OFF] • More than a few seconds passed after turning ignition switch OFF	BATTERY VOLTAGE (11 - 14V)
119 120	R/G R/G	Power supply for ECM	**[Ignition switch: ON]**	BATTERY VOLTAGE (11 - 14V)

Diagnosis Procedure

INFOID:0000000001717437

1. CHECK EGR VOLUME CONTROL VALVE POWER SUPPLY CIRCUIT

1. Turn ignition switch OFF.
2. Disconnect EGR volume control valve harness connector.
3. Turn ignition switch ON.

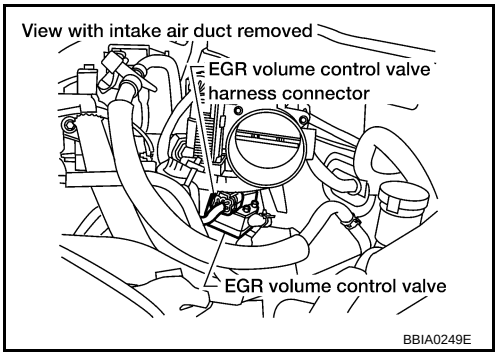

4. Check voltage between EGR volume control valve terminals 2, 5 and ground with CONSULT-III or tester.

Voltage: Battery voltage

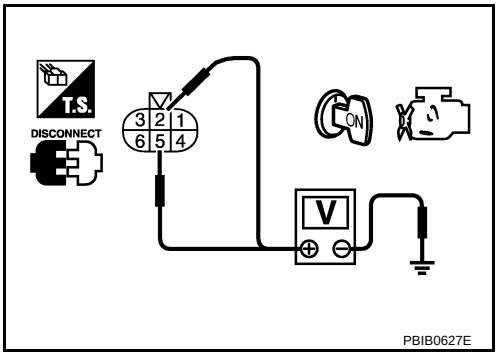

OK or NG

OK >> GO TO 3.
NG >> GO TO 2.

2. DETECT MALFUNCTIONING PART

Check the following.
- Harness connectors E5, F14
- Harness for open or short between EGR volume control valve and IPDM E/R

>> Repair harness or connectors.

3. CHECK EGR VOLUME CONTROL VALVE OUTPUT SIGNAL CIRCUIT FOR OPEN AND SHORT

1. Turn ignition switch OFF.
2. Disconnect ECM harness connector.
3. Check harness continuity between ECM terminals and EGR volume control valve terminals as follows. Refer to Wiring Diagram.

ECM terminal	EGR volume control valve
17	6
18	3
19	4
20	1

Continuity should exist.

4. Also check harness for short to ground and short to power.

OK or NG

OK >> GO TO 4.
NG >> Repair open circuit or short to ground or short to power in harness or connectors.

4. CHECK EGR VOLUME CONTROL VALVE

Refer to EC-345, "Component Inspection".

OK or NG

OK >> GO TO 5.
NG >> Replace EGR volume control valve.

5. CHECK INTERMITTENT INCIDENT

Refer to EC-130.

>> **INSPECTION END**

Component Inspection

INFOID:0000000001717438

EGR VOLUME CONTROL VALVE

With CONSULT-III

1. Turn ignition switch OFF.
2. Disconnect EGR volume control valve harness connector.
3. Check resistance between EGR volume control valve terminal 2 and terminals 1, 3, terminal 5 and terminals 4, 6.

   Resistance: 20 - 24 Ω [at 20°C (68F°)]

   If NG, replace EGR volume control valve.
   If OK, go to next step.
4. Remove EGR volume control valve.
5. Reconnect ECM harness connector and EGR volume control valve harness connector.
6. Turn ignition switch ON.

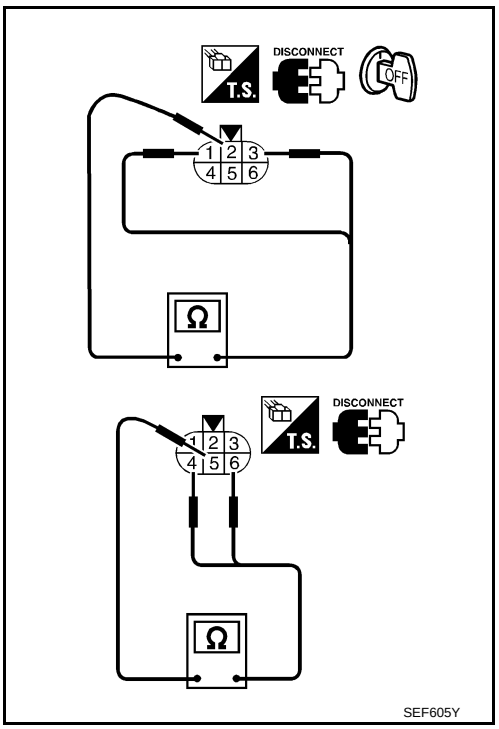

7. Perform “EGR VOL CONT/V” in “ACTIVE TEST” mode with CONSULT-III.

8. Check that EGR volume control valve shaft moves smoothly forward and backward according to the valve opening steps.
   If NG, replace EGR volume control valve.

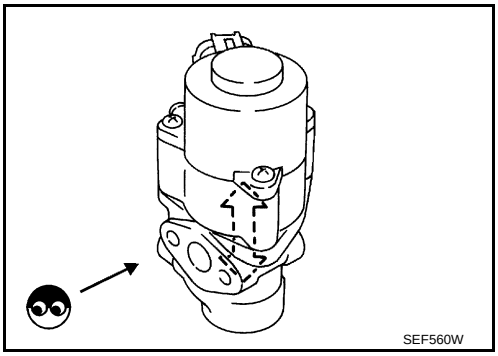

Without CONSULT-III

1. Turn ignition switch OFF.
2. Disconnect EGR volume control valve harness connector.
3. Check resistance between EGR volume control valve terminal 2 and terminals 1, 3, terminal 5 and terminals 4, 6.

   Resistance: 20 - 24 Ω [at 20°C (68F°)]

   If NG, replace EGR volume control valve.
   If OK, go to next step.
4. Remove EGR volume control valve.
5. Reconnect ECM harness connector and EGR volume control valve harness connector.
6. Turn ignition switch ON and OFF.

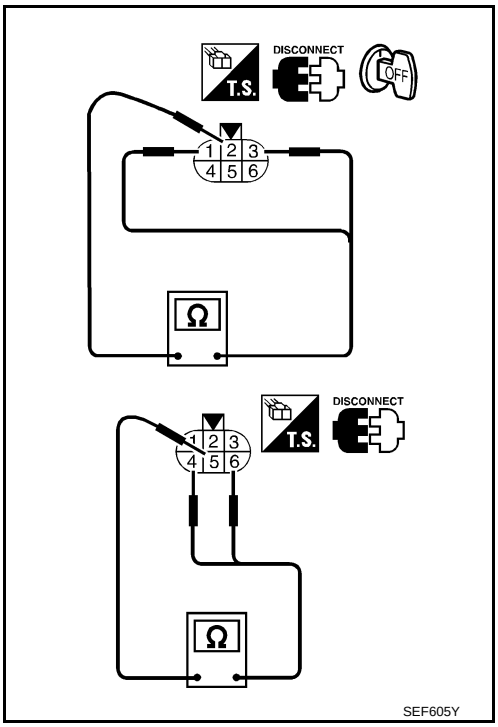

7. Check that EGR volume control valve shaft moves smoothly forward and backward according to the ignition switch position.

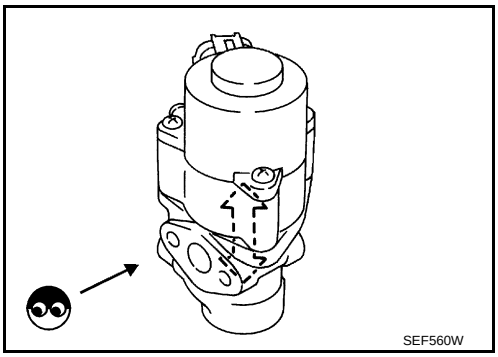

Removal and Installation

INFOID:0000000001717439

EGR VOLUME CONTROL VALVE
Refer to EM-21.

DTC P0405, P0406 EGRT SENSOR

Component Description

INFOID:0000000001717440

The EGR temperature sensor detects temperature changes in the EGR passageway. When the EGR volume control valve opens, hot exhaust gases flow, and the temperature in the passageway changes. The EGR temperature sensor is a thermistor that modifies a voltage signal sent from the ECM. This modified signal then returns to the ECM as an input signal. As the temperature increases, EGR temperature sensor resistance decreases.
This sensor is not directly used to control the engine system. It is used only for the on board diagnosis.

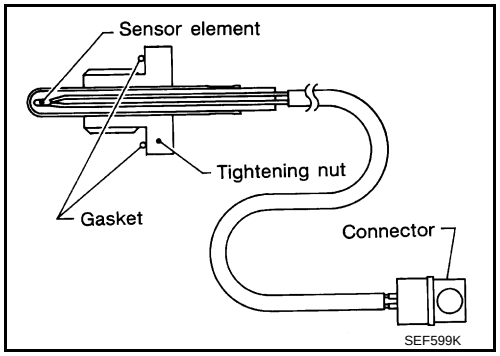

<Reference data>

EGR temperature °C (°F)	Voltage* V	Resistance MΩ
0 (32)	4.59	0.73 - 0.88
50 (122)	2.32	0.074 - 0.082
100 (212)	0.62	0.011 - 0.014

*: This data is reference value and is measured between ECM terminal 54 (EGR temperature sensor) and ground.

CAUTION:

Do not use ECM ground terminals when measuring input/output voltage. Doing so may damage the ECM's transistor. Use a ground other than ECM terminals, such as the ground.

When EGR system is operating.

Voltage: 0 - 1.5V

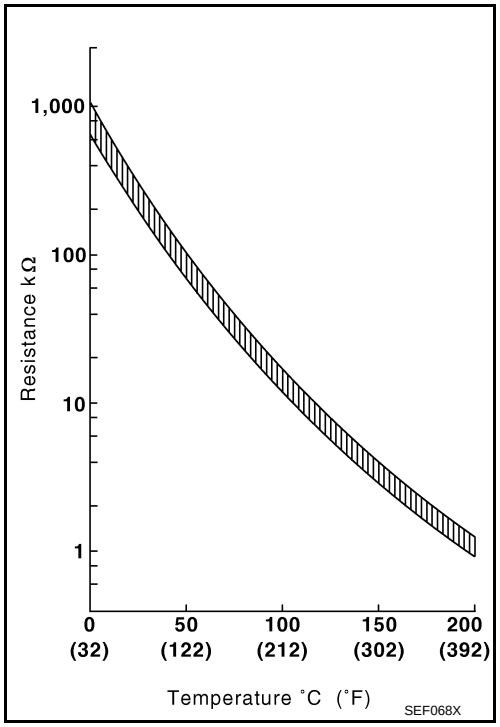

On Board Diagnosis Logic

INFOID:0000000001717441

DTC No.	Trouble Diagnosis Name	DTC Detecting Condition	Possible Cause
P0405 0405	EGR temperature sensor circuit low input	An excessively low voltage from the EGR temperature sensor is sent to ECM even when engine coolant temperature is low.	• Harness or connectors (The EGR temperature sensor circuit is shorted.) • EGR temperature sensor • Malfunction of EGR function
P0406 0406	EGR temperature sensor circuit high input	An excessively high voltage from the EGR temperature sensor is sent to ECM even when engine coolant temperature is high.	• Harness or connectors (The EGR temperature sensor circuit is open.) • EGR temperature sensor • Malfunction of EGR function

DTC Confirmation Procedure

INFOID:0000000001717442

NOTE:
If DTC Confirmation Procedure has been previously conducted, always perform the following before conducting the next step.

1. Turn ignition switch OFF and wait at least 10 seconds.
2. Turn ignition switch ON.
3. Turn ignition switch OFF and wait at least 10 seconds.

PROCEDURE FOR DTC P0405

With CONSULT-III

1. Turn ignition switch ON.
2. Select “DATA MONITOR” mode with CONSULT-III.
3. Verify that “COOLAN TEMP/S” indicates less than 50°C (122°F).
   If the engine coolant temperature is above the range, cool the engine down.
4. Start engine and let it idle for at least 8 seconds.
5. Check 1st trip DTC.
6. If 1st trip DTC is detected, go to EC-350, "Diagnosis Procedure".

With GST

Follow the procedure “With CONSULT-III” above.

PROCEDURE FOR DTC P0406

CAUTION:
Always drive vehicle at a safe speed.
TESTING CONDITION:
Always perform the test at a temperature above –10°C (14°F).

With CONSULT-III

1. Start engine and warm it up to normal operating temperature.
2. Select “EGR VOL CONT/V” in “ACTIVE TEST” mode with CONSULT-III.
3. Hold engine speed at 1,500 rpm.
4. Touch “Qu” and set the EGR volume control valve opening to 50 step and check “EGR TEMP SEN” indication.
   “EGR TEMP SEN” indication should decrease to less than 1.0V.
   If the check result is NG, go to EC-350, "Diagnosis Procedure".
   If the check result is OK, go to the following step.
5. Turn ignition switch OFF and wait at least 10 seconds.
6. Turn ignition switch ON.
7. Turn ignition switch OFF and wait at least 10 seconds.
8. Turn ignition switch ON and select “DATA MONITOR” mode with CONSULT-III.
9. Start engine and maintain the following conditions for at least 5 consecutive seconds.

ENG SPEED	1,200 - 2,800 rpm
VHCL SPEED SE	10 km/h (6 MPH) or more
B/FUEL SCHDL	4 - 9 msec
Shift lever	Suitable position

10. Check 1st trip DTC.
11. If 1st trip DTC is detected, go to EC-350, "Diagnosis Procedure".

With GST

1. Start engine and warm it up to normal operating temperature.
2. Turn ignition switch OFF and wait at least 10 seconds.
3. Turn ignition switch ON.
4. Turn ignition switch OFF and wait at least 10 seconds.
5. Turn ignition switch ON.
6. Select Service $01 with GST and maintain the following conditions for at least 5 consecutive seconds.

Engine speed	1,200 - 2,800 rpm
Vehicle speed	10 km/h (6 MPH) or more
Shift lever	Suitable position

7. Select Service $07 with GST.
8. Check 1st trip DTC.
9. If 1st trip DTC is detected, go to EC-350, "Diagnosis Procedure".

Wiring Diagram

INFOID:0000000001717443

EC-EGR/TS-01

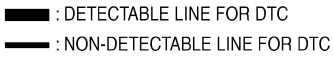

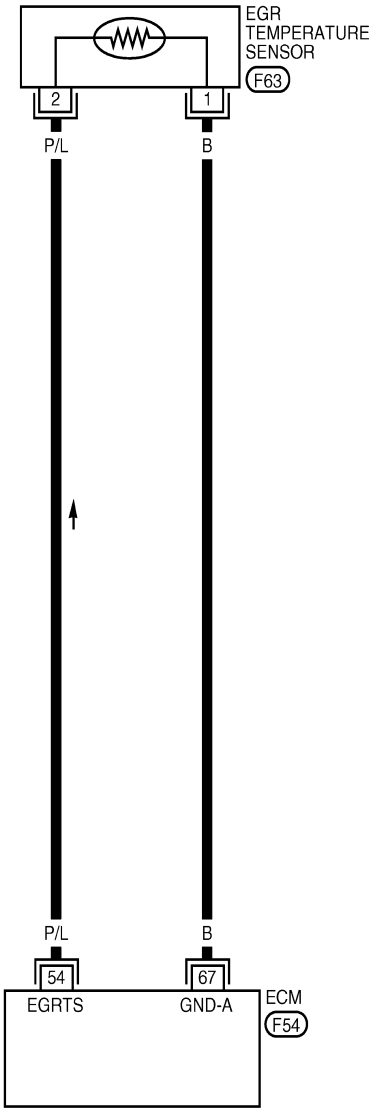

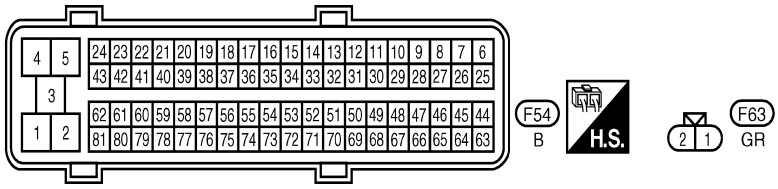

BBWA2545E

Diagnosis Procedure

INFOID:0000000001717444

1. CHECK GROUND CONNECTIONS

1. Turn ignition switch OFF.
2. Loosen and retighten three ground screws on the body. Refer to EC-138, "Ground Inspection".

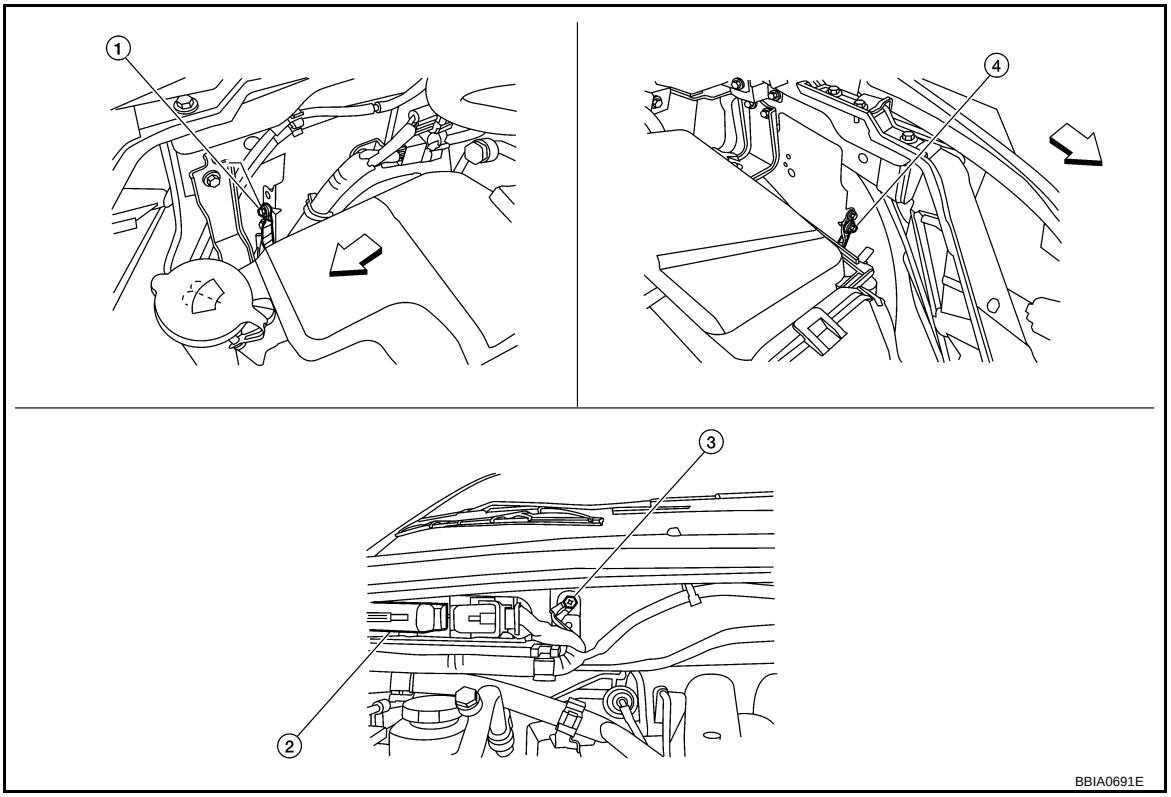

⇦ Vehicle front

1. Body ground E24
2. ECM
3. Body ground E9
4. Body ground E15

OK or NG

OK >> GO TO 2.
NG >> Repair or replace ground connections.

2. CHECK EGR TEMPERATURE SENSOR POWER SUPPLY CIRCUIT

1. Disconnect EGR temperature sensor harness connector.
2. Turn ignition switch ON.

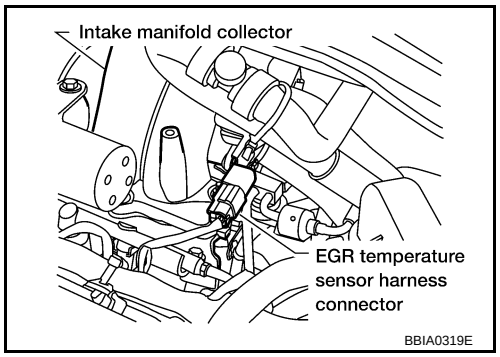

3. Check voltage between EGR temperature sensor terminal 2 and ground with CONSULT-III or tester.

Voltage: Approximately 5V

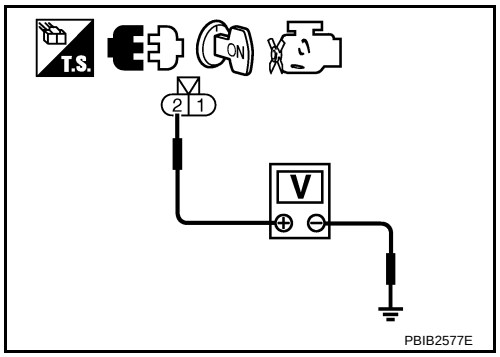

OK or NG

OK >> GO TO 3.
NG >> Repair or replace harness or connectors.

3. CHECK EGR TEMPERATURE SENSOR GROUND CIRCUIT FOR OPEN AND SHORT

1. Turn ignition switch OFF.
2. Disconnect ECM harness connector.
3. Check harness continuity between EGR temperature sensor terminal 1 and ECM terminal 67. Refer to Wiring Diagram.

Continuity should exist.

4. Also check harness for short to ground and short to power.

OK or NG

OK >> GO TO 4.
NG >> Repair open circuit or short to ground or short to power in harness or connector.

4. CHECK EGR TEMPERATURE SENSOR

Refer to EC-352, "Component Inspection".

OK or NG

OK >> GO TO 5.
NG >> Replace EGR temperature sensor.

5. CHECK EGR VOLUME CONTROL VALVE

Refer to EC-345, "Component Inspection".

OK or NG

OK >> GO TO 6.
NG >> Replace EGR volume control valve.

6. CHECK INTERMITTENT INCIDENT

Refer to EC-130.

>> **INSPECTION END**

Component Inspection

INFOID:0000000001717445

EGR TEMPERATURE SENSOR

1. Turn ignition switch OFF.
2. Disconnect EGR temperature sensor harness connector.
3. Check resistance between EGR temperature sensor terminals 1 and 2 as shown in the figure.

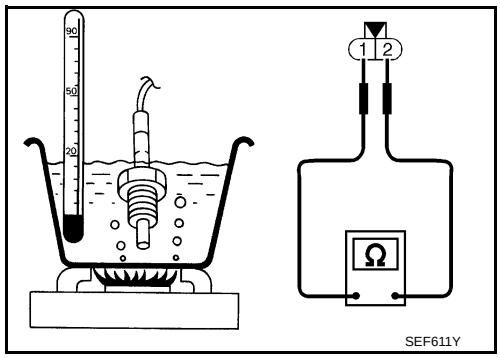

< Reference data>

EGR temperature °C (°F)	Resistance MΩ
0 (32)	0.73 - 0.88
50 (122)	0.074 - 0.082
100 (212)	0.011 - 0.014

4. If NG, replace EGR temperature sensor.

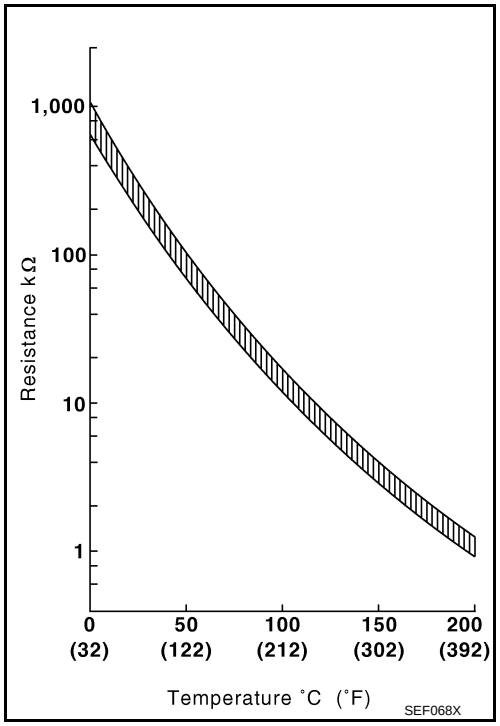

INFOID:0000000001717446

Removal and Installation

EGR TEMPERATURE SENSOR

Refer to EM-21.

DTC P0420, P0430 THREE WAY CATALYST FUNCTION

On Board Diagnosis Logic

INFOID:0000000001717447

The ECM monitors the switching frequency ratio of air fuel ratio (A/F) sensor 1 and heated oxygen sensor 2.
A three way catalyst (manifold) with high oxygen storage capacity will indicate a low switching frequency of heated oxygen sensor 2. As oxygen storage capacity decreases, the heated oxygen sensor 2 switching frequency will increase.
When the frequency ratio of air fuel ratio (A/F) sensor 1 and heated oxygen sensor 2 approaches a specified limit value, the three way catalyst (manifold) malfunction is diagnosed.

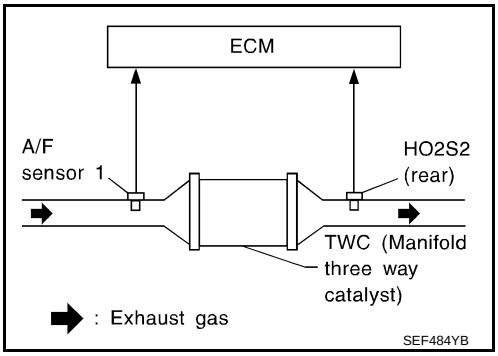

DTC No.	Trouble diagnosis name	DTC detecting condition	Possible cause
P0420 0420 (Bank 1)	Catalyst system efficiency below threshold	• Three way catalyst (manifold) does not operate properly. • Three way catalyst (manifold) does not have enough oxygen storage capacity.	• Three way catalyst (manifold) • Exhaust tube • Intake air leaks • Fuel injector • Fuel injector leaks • Spark plug • Improper ignition timing
P0430 0430 (Bank 2)			

DTC Confirmation Procedure

INFOID:0000000001717448

NOTE:
If DTC Confirmation Procedure has been previously conducted, always perform the following before conducting the next step.
1. Turn ignition switch OFF and wait at least 10 seconds.
2. Turn ignition switch ON.
3. Turn ignition switch OFF and wait at least 10 seconds.

WITH CONSULT-III

TESTING CONDITION:
Do not hold engine speed for more than the specified minutes below.

1. Turn ignition switch ON and select “DATA MONITOR” mode with CONSULT-III.
2. Start engine and warm it up to the normal operating temperature.
3. Turn ignition switch OFF and wait at least 10 seconds.
4. Turn ignition switch ON.
5. Turn ignition switch OFF and wait at least 10 seconds.
6. Start engine and keep the engine speed between 3,500 and 4,000 rpm for at least 1 minute under no load.
7. Let engine idle for 1 minute.
8. Make sure that “COOLAN TEMP/S” indicates more than 70°C (158°F).
   If not, warm up engine and go to next step when “COOLAN TEMP/S” indication reaches to 70°C (158°F).
9. Open engine hood.
10. Select “DTC & SRT CONFIRMATION” then “SRT WORK SUPPORT” mode with CONSULT-III.
11. Rev engine up to 2,000 to 3,000 rpm and hold it for 3 consecutive minutes then release the accelerator pedal completely.
    If “INCMP” of “CATALYST” changed to “CMPLT”, go to step 12.
12. Wait 5 seconds at idle.
13. Rev engine up to 2,000 to 3,000 rpm and maintain it until “INCMP” of “CATALYST” changes to “CMPLT” (It will take approximately 5 minutes).
    If not “CMPLT”, stop engine and cool it down to less than 70°C (158°F) and then retest from step 1.
14. Check 1st trip DTC.

15. Confirm that the 1st trip DTC is not detected.
    If 1st trip DTC is detected, go to EC-355, "Diagnosis Procedure".

Overall Function Check

INFOID:0000000001717449

Use this procedure to check the overall function of the three way catalyst (manifold). During this check, a 1st trip DTC might not be confirmed.

WITH GST

1. Start engine and warm it up to the normal operating temperature.
2. Turn ignition switch OFF and wait at least 10 seconds.
3. Turn ignition switch ON.
4. Turn ignition switch OFF and wait at least 10 seconds.
5. Start engine and keep the engine speed between 3,500 and 4,000 rpm for at least 1 minute under no load.
6. Let engine idle for 1 minute.
7. Open engine hood.
8. Set voltmeter probe between ECM terminals 74 [HO2S2 (bank 1) signal], 55 [HO2S2 (bank 2) signal] and ground.
9. Keep engine speed at 2,500 rpm constant under no load.
10. Make sure that the voltage does not vary for more than 5 seconds.
    If the voltage fluctuation cycle takes less than 5 seconds, go to EC-355, "Diagnosis Procedure".
    - 1 cycle: 0.6 - 1.0 → 0 - 0.3 → 0.6 - 1.0

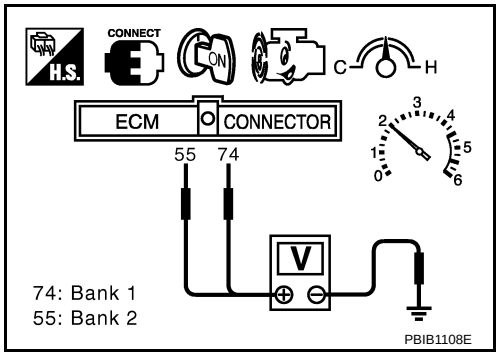

Diagnosis Procedure

INFOID:0000000001717450

1. CHECK EXHAUST SYSTEM

Visually check exhaust tubes and muffler for dent.

OK or NG

OK >> GO TO 2.
NG >> Repair or replace.

2. CHECK EXHAUST GAS LEAK

1. Start engine and run it at idle.
2. Listen for an exhaust gas leak before the three way catalyst (manifold).

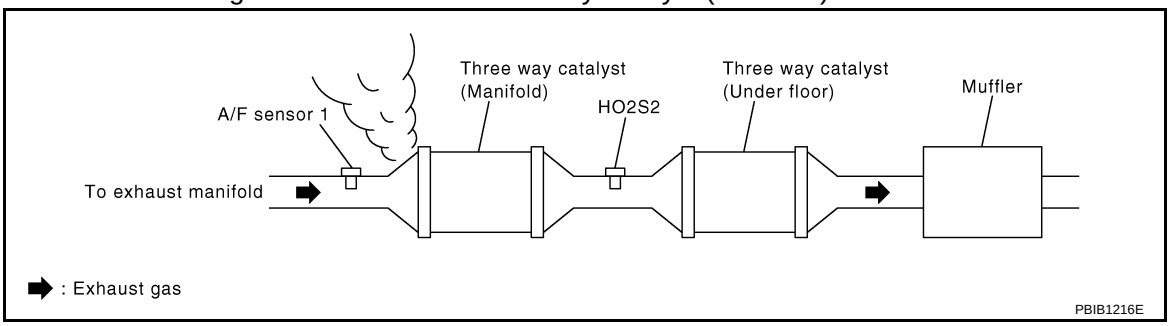

OK or NG

OK >> GO TO 3.
NG >> Repair or replace.

3. CHECK INTAKE AIR LEAK

Listen for an intake air leak after the mass air flow sensor.

OK or NG

OK >> GO TO 4.

NG >> Repair or replace.

4. CHECK IGNITION TIMING

Check the following items. Refer to EC-68, "Basic Inspection".

Items	Specifications
Target idle speed	675 ± 50 rpm (in P or N position)
Ignition timing	15 ± 5° BTDC (in P or N position)

OK or NG

OK >> GO TO 5.
NG >> Follow the EC-68, "Basic Inspection".

5. CHECK FUEL INJECTORS

1. Stop engine and then turn ignition switch ON.
2. Check voltage between ECM terminals 21, 22, 23, 40, 41, 42 and ground with CONSULT-III or tester.
   Refer to Wiring Diagram for FUEL INJECTOR, EC-580.

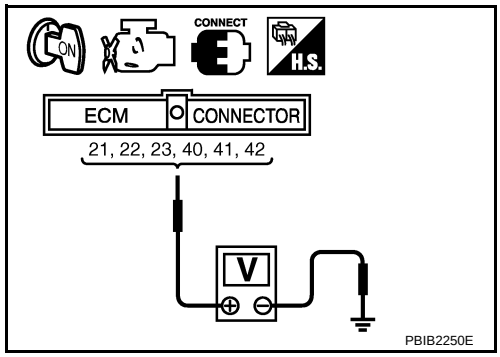

Voltage: Battery voltage

OK or NG

OK >> GO TO 6.
NG >> Perform EC-581, "Diagnosis Procedure".

6. CHECK FUNCTION OF IGNITION COIL-I

CAUTION:
Do the following procedure in the place where ventilation is good without the combustible.

1. Turn ignition switch OFF.
2. Remove fuel pump fuse in IPDM E/R to release fuel pressure.
   NOTE:
   Do not use CONSULT-III to release fuel pressure, or fuel pressure applies again during the following procedure.
3. Start engine.
4. After engine stalls, crank it two or three times to release all fuel pressure.
5. Turn ignition switch OFF.
6. Remove all ignition coil harness connectors to avoid the electrical discharge from the ignition coils.
7. Remove ignition coil and spark plug of the cylinder to be checked.

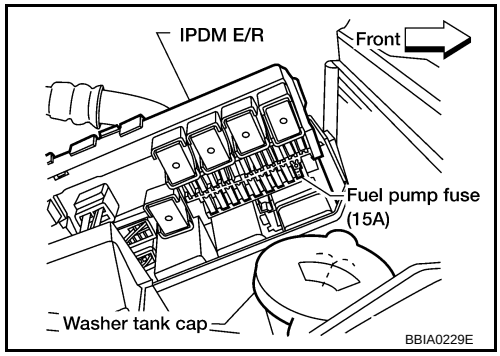

8. Crank engine for 5 seconds or more to remove combustion gas in the cylinder.
9. Connect spark plug and harness connector to ignition coil.
10. Fix ignition coil using a rope etc. with gap of 13 - 17 mm between the edge of the spark plug and grounded metal portion as shown in the figure.
11. Crank engine for about 3 seconds, and check whether spark is generated between the spark plug and the grounded metal portion.

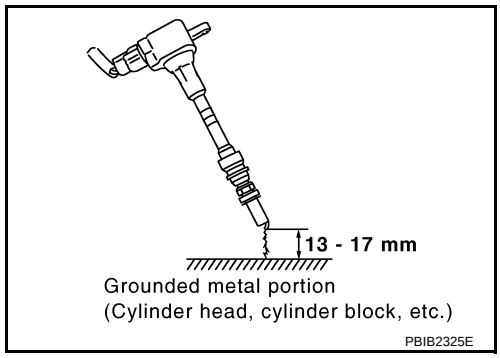

Spark should be generated.

CAUTION:
- **Do not approach to the spark plug and the ignition coil within 50cm. Be careful not to get an electrical shock while checking, because the electrical discharge voltage becomes 20kV or more.**
- **It might cause to damage the ignition coil if the gap of more than 17 mm is taken.**

NOTE:
When the gap is less than 13 mm, the spark might be generated even if the coil is malfunctioning.

OK or NG

OK >> GO TO 10.
NG >> GO TO 7.

7. CHECK FUNCTION OF IGNITION COIL-II

1. Turn ignition switch OFF.
2. Disconnect spark plug and connect a known-good spark plug.
3. Crank engine for about 3 seconds, and recheck whether spark is generated between the spark plug and the grounded metal portion.

Spark should be generated.

OK or NG

OK >> GO TO 8.
NG >> Check ignition coil, power transistor and their circuits. Refer to EC-579.

8. CHECK SPARK PLUG

Check the initial spark plug for fouling, etc.

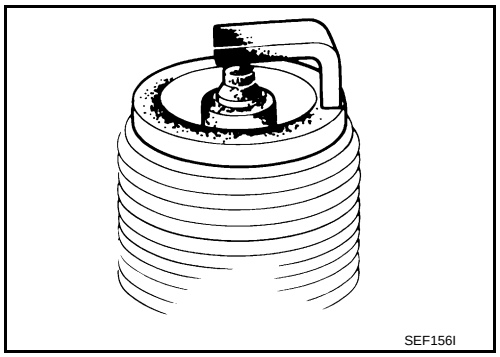

OK or NG

OK >> Replace spark plug(s) with standard type one(s). For spark plug type, refer to MA-20, "Changing Spark Plugs (Platinum-Tipped Type)".
NG >> 1. Repair or clean spark plug.
2. GO TO 9.

9. CHECK FUNCTION OF IGNITION COIL-III

1. Reconnect the initial spark plugs.
2. Crank engine for about 3 seconds, and recheck whether spark is generated between the spark plug and the grounded portion.

Spark should be generated.

OK or NG

OK >> **INSPECTION END**
NG >> Replace spark plug(s) with standard type one(s). For spark plug type, refer to MA-20, "Changing Spark Plugs (Platinum-Tipped Type)".

10. CHECK FUEL INJECTOR

1. Turn ignition switch OFF.
2. Remove fuel injector assembly.
   Refer to EM-38.
   Keep fuel hose and all fuel injectors connected to fuel tube.
3. Reconnect all fuel injector harness connectors.
4. Disconnect all ignition coil harness connectors.
5. Turn ignition switch ON.
   Make sure fuel does not drip from fuel injector.

OK or NG

OK (Does not drip.)>>GO TO 11.
NG (Drips.)>>Replace the fuel injector(s) from which fuel is dripping.

11. CHECK INTERMITTENT INCIDENT

Refer to EC-130.

Trouble is fixed.>>**INSPECTION END**
Trouble is not fixed.>>Replace three way catalyst (manifold).

DTC P0441 EVAP CONTROL SYSTEM

System Description

INFOID:0000000001717451

NOTE:
If DTC P0441 is displayed with other DTC such as P2122, P2123, P2127, P2128 or P2138, first perform trouble diagnosis for other DTC.

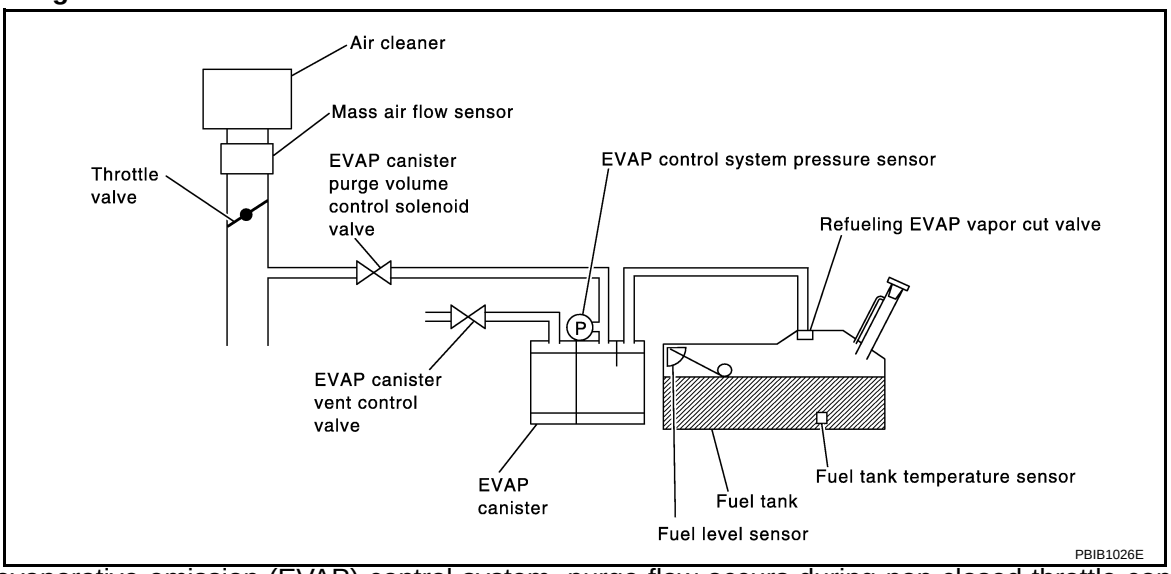

In this evaporative emission (EVAP) control system, purge flow occurs during non-closed throttle conditions. Purge volume is related to air intake volume. Under normal purge conditions (non-closed throttle), the EVAP canister purge volume control solenoid valve is open to admit purge flow. Purge flow exposes the EVAP control system pressure sensor to intake manifold vacuum.

On Board Diagnosis Logic

INFOID:0000000001717452

Under normal conditions (non-closed throttle), sensor output voltage indicates if pressure drop and purge flow are adequate. If not, a malfunction is determined.

DTC No.	Trouble diagnosis name	DTC detecting condition	Possible cause
P0441 0441	EVAP control system incorrect purge flow	EVAP control system does not operate properly, EVAP control system has a leak between intake manifold and EVAP control system pressure sensor.	• EVAP canister purge volume control solenoid valve stuck closed • EVAP control system pressure sensor and the circuit • Loose, disconnected or improper connection of rubber tube • Blocked rubber tube • Cracked EVAP canister • EVAP canister purge volume control solenoid valve circuit • Accelerator pedal position sensor • Blocked purge port • EVAP canister vent control valve

DTC Confirmation Procedure

INFOID:0000000001717453

CAUTION:
Always drive vehicle at a safe speed.
NOTE:
If DTC Confirmation Procedure has been previously conducted, always perform the following before conducting the next step.
1. Turn ignition switch OFF and wait at least 10 seconds.
2. Turn ignition switch ON.
3. Turn ignition switch OFF and wait at least 10 seconds.

TESTING CONDITION:

Always perform test at a temperature of 5°C (41°F) or more.

WITH CONSULT-III

1. Start engine and warm it up to normal operating temperature.
2. Turn ignition switch OFF and wait at least 10 seconds.
3. Turn ignition switch ON.
4. Turn ignition switch OFF and wait at least 10 seconds.
5. Start engine and let it idle for at least 70 seconds.
6. Select “PURG FLOW P0441” of “EVAPORATIVE SYSTEM” in “DTC WORK SUPPORT” mode with CONSULT-III.
7. Touch “START”.
   If “COMPLETED” is displayed, go to step 7.
8. When the following conditions are met, “TESTING” will be displayed on the CONSULT-III screen. Maintain the conditions continuously until “TESTING” changes to “COMPLETED”. (It will take at least 35 seconds.)

Shift lever	Suitable position
VHCL SPEED SE	32 - 120 km/h (20 - 75 MPH)
ENG SPEED	500 - 3,000 rpm
B/FUEL SCHDL	1.3 - 9.0 msec
COOLAN TEMP/S	70 - 100°C (158 - 212°F)

If “TESTING” is not changed for a long time, retry from step 2.

9. Make sure that “OK” is displayed after touching “SELF-DIAG RESULTS”. If “NG” is displayed, refer to EC-361, "Diagnosis Procedure".

Overall Function Check

INFOID:0000000001717454

Use this procedure to check the overall monitoring function of the EVAP control system purge flow monitoring. During this check, a 1st trip DTC might not be confirmed.

WITH GST

1. Lift up drive wheels.
2. Start engine (TCS switch or VDC switch OFF) and warm it up to normal operating temperature.
3. Turn ignition switch OFF, wait at least 10 seconds.
4. Turn ignition switch ON.
5. Turn ignition switch OFF and wait at least 10 seconds.
6. Start engine and wait at least 70 seconds.
7. Set voltmeter probes to ECM terminals 32 (EVAP control system pressure sensor signal) and ground.
8. Check EVAP control system pressure sensor value at idle speed and note it.
9. Establish and maintain the following conditions for at least 1 minute.

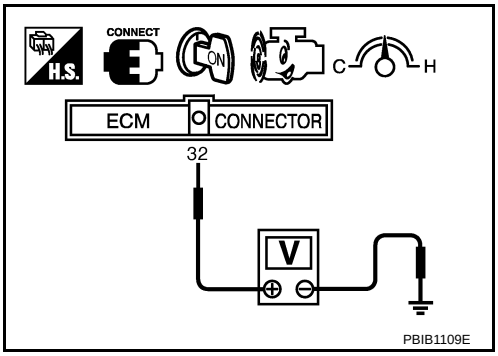

Air conditioner switch	ON
Headlamp switch	ON
Rear window defogger switch	ON
Engine speed	Approx. 3,000 rpm
Gear position	Any position other than P, N or R

10. Verify that EVAP control system pressure sensor value stays 0.1V less than the value at idle speed (measured at step 6) for at least 1 second.
11. If NG, go to EC-361, "Diagnosis Procedure".

Diagnosis Procedure

INFOID:0000000001717455

1. CHECK EVAP CANISTER

1. Turn ignition switch OFF.
2. Check EVAP canister for cracks.

OK or NG

OK (With CONSULT-III)>>GO TO 2.
OK (Without CONSULT-III)>>GO TO 3.
NG >> Replace EVAP canister.

2. CHECK PURGE FLOW

With CONSULT-III

1. Disconnect vacuum hose connected to EVAP canister purge volume control solenoid valve at EVAP service port and install vacuum gauge. For the location of EVAP service port, refer to EC-28, "Description".
2. Start engine and let it idle.
3. Select “PURG VOL CONT/V” in “ACTIVE TEST” mode with CONSULT-III.
4. Rev engine up to 2,000 rpm.
5. Touch “Qd” and “Qu” on CONSULT-III screen to adjust “PURG VOL CONT/V” opening and check vacuum existence.

PURG VOL CONT/V	Vacuum
100%	Should exist
0%	Should not exist

OK or NG

OK >> GO TO 7.
NG >> GO TO 4.

3. CHECK PURGE FLOW

Without CONSULT-III

1. Start engine and warm it up to normal operating temperature.
2. Stop engine.
3. Disconnect vacuum hose connected to EVAP canister purge volume control solenoid valve at EVAP service port and install vacuum gauge. For the location of EVAP service port, refer to EC-28, "Description".
4. Start engine and let it idle.
   Do not depress accelerator pedal even slightly.
5. Check vacuum gauge indication before 60 seconds passed after engine starting engine.

   Vacuum should not exist.

6. Revving engine up to 2,000 rpm after 100 seconds passed after starting engine.

   Vacuum should exist.

OK or NG

OK >> GO TO 7.
NG >> GO TO 4.

4. CHECK EVAP PURGE LINE

1. Turn ignition switch OFF.
2. Check EVAP purge line for improper connection or disconnection.
   Refer to EC-28, "Description".

OK or NG

OK >> GO TO 5.
NG >> Repair it.

5. CHECK EVAP PURGE HOSE AND PURGE PORT

1. Disconnect purge hoses connected to EVAP service port **A** and EVAP canister purge volume control solenoid valve **B**.
2. Blow air into each hose and EVAP purge port **C**.

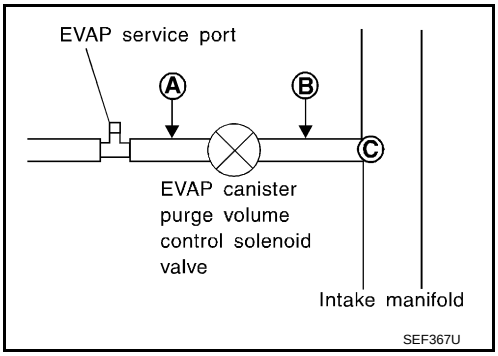

3. Check that air flows freely.

OK or NG

OK (With CONSULT-III)>>GO TO 6.
OK (Without CONSULT-III)>>GO TO 7.
NG >> Repair or clean hoses and/or purge port.

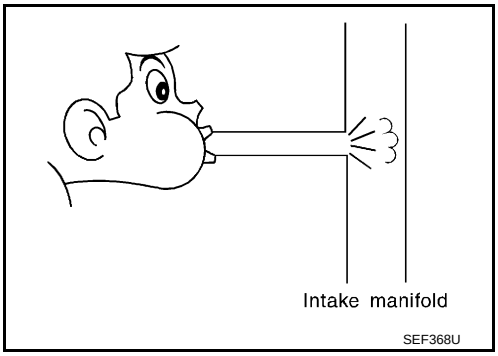

6. CHECK EVAP CANISTER PURGE VOLUME CONTROL SOLENOID VALVE

With CONSULT-III

1. Start engine.
2. Perform “PURG VOL CONT/V” in “ACTIVE TEST” mode with CONSULT-III. Check that engine speed varies according to the valve opening.

OK or NG

OK >> GO TO 8.
NG >> GO TO 7.

7. CHECK EVAP CANISTER PURGE VOLUME CONTROL SOLENOID VALVE

Refer to EC-384, "Component Inspection".

OK or NG

OK >> GO TO 8.
NG >> Replace EVAP canister purge volume control solenoid valve.

8. CHECK EVAP CONTROL SYSTEM PRESSURE SENSOR CONNECTOR

1. Disconnect EVAP control system pressure sensor harness connector.
2. Check connectors for water.

Water should not exist.

OK or NG

OK >> GO TO 9.
NG >> Replace EVAP control system pressure sensor.

9. CHECK EVAP CONTROL SYSTEM PRESSURE SENSOR FUNCTION

Refer to DTC Confirmation Procedure for DTC P0452 EC-399, P0453 EC-405.

OK or NG

OK >> GO TO 10.
NG >> Replace EVAP control system pressure sensor.

10. CHECK RUBBER TUBE FOR CLOGGING

1. Disconnect rubber tube connected to EVAP canister vent control valve.
2. Check the rubber tube for clogging.

OK or NG

OK >> GO TO 11.
NG >> Clean the rubber tube using an air blower.

11. CHECK EVAP CANISTER VENT CONTROL VALVE

Refer to EC-389, "Component Inspection".

OK or NG

OK >> GO TO 12.
NG >> Replace EVAP canister vent control valve.

12. CHECK EVAP PURGE LINE

Inspect EVAP purge line (pipe and rubber tube). Check for evidence of leaks.
Refer to EC-28, "Description".

OK or NG

OK >> GO TO 13.
NG >> Replace it.

13. CLEAN EVAP PURGE LINE

Clean EVAP purge line (pipe and rubber tube) using air blower.

>> GO TO 14.

14. CHECK INTERMITTENT INCIDENT

Refer to EC-130.

>> **INSPECTION END**

DTC P0442 EVAP CONTROL SYSTEM

On Board Diagnosis Logic

INFOID:0000000001717456

This diagnosis detects leaks in the EVAP purge line using engine intake manifold vacuum.
If pressure does not increase, the ECM will check for leaks in the line between the fuel tank and EVAP canister purge volume control solenoid valve, under the following “Vacuum test” conditions.
The EVAP canister vent control valve is closed to shut the EVAP purge line off. The EVAP canister purge volume control solenoid valve will then be opened to depressurize the EVAP purge line using intake manifold vacuum. After this occurs, the EVAP canister purge volume control solenoid valve will be closed.

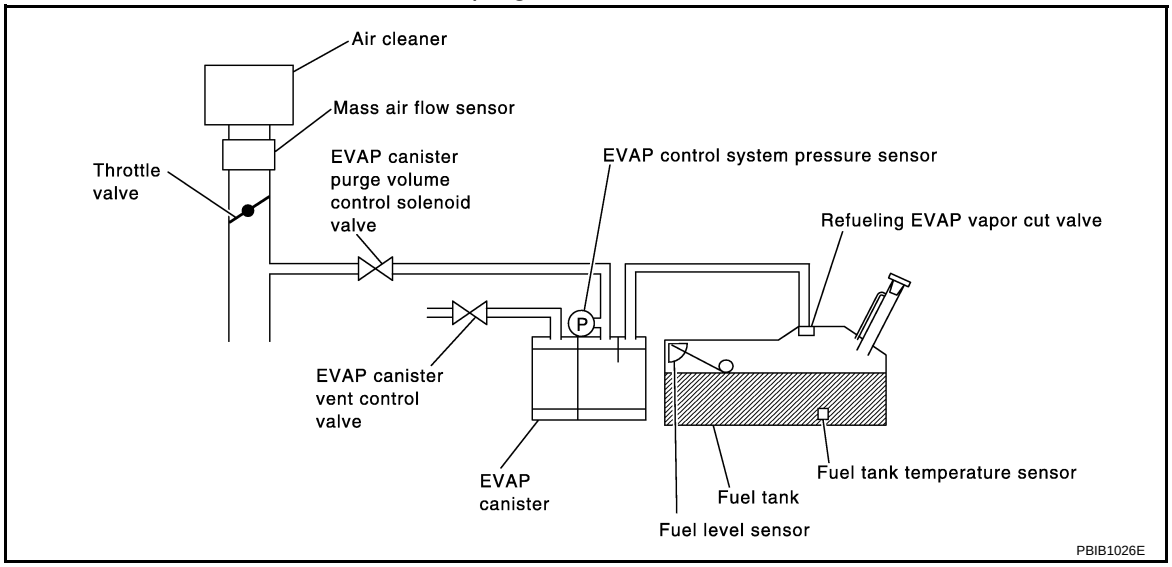

DTC No.	Trouble diagnosis name	DTC detecting condition	Possible cause
P0442 0442	EVAP control system small leak detected (negative pressure)	EVAP control system has a leak, EVAP control system does not operate properly.	• Incorrect fuel tank vacuum relief valve • Incorrect fuel filler cap used • Fuel filler cap remains open or fails to close. • Foreign matter caught in fuel filler cap. • Leak is in line between intake manifold and EVAP canister purge volume control solenoid valve. • Foreign matter caught in EVAP canister vent control valve. • EVAP canister or fuel tank leaks • EVAP purge line (pipe and rubber tube) leaks • EVAP purge line rubber tube bent • Loose or disconnected rubber tube • EVAP canister vent control valve and the circuit • EVAP canister purge volume control solenoid valve and the circuit • Fuel tank temperature sensor • O-ring of EVAP canister vent control valve is missing or damaged • EVAP canister is saturated with water • EVAP control system pressure sensor • Fuel level sensor and the circuit • Refueling EVAP vapor cut valve • ORVR system leaks

CAUTION:
- **Use only a genuine NISSAN fuel filler cap as a replacement. If an incorrect fuel filler cap is used, the MIL may come on.**
- **If the fuel filler cap is not tightened properly, the MIL may come on.**
- **Use only a genuine NISSAN rubber tube as a replacement.**

DTC Confirmation Procedure

INFOID:0000000001717457

NOTE:
If DTC Confirmation Procedure has been previously conducted, always perform the following before conducting the next step.
1. Turn ignition switch OFF and wait at least 10 seconds.
2. Turn ignition switch ON.
3. Turn ignition switch OFF and wait at least 10 seconds.

TESTING CONDITION:
- **Perform “DTC WORK SUPPORT” when the fuel level is between 1/4 and 3/4 full, and vehicle is placed on flat level surface.**
- **Always perform test at a temperature of 0 to 30°C (32 to 86°F).**

WITH CONSULT-III

1. Turn ignition switch ON.
2. Turn ignition switch OFF and wait at least 10 seconds.
3. Turn ignition switch ON and select “DATA MONITOR” mode with CONSULT-III.
4. Make sure that the following conditions are met.
   COOLAN TEMP/S: 0 - 70°C (32 - 158°F)
   INT/A TEMP SE: 0 - 30°C (32 - 86°F)
5. Select “EVAP SML LEAK P0442/P1442” of “EVAPORATIVE SYSTEM” in “DTC WORK SUPPORT” mode with CONSULT-III.
   Follow the instruction displayed.
   NOTE:
   If the engine speed cannot be maintained within the range displayed on the CONSULT-III screen, go to EC-68, "Basic Inspection".
6. Make sure that “OK” is displayed.
   If “NG” is displayed, refer to EC-365, "Diagnosis Procedure".
   NOTE:
   Make sure that EVAP hoses are connected to EVAP canister purge volume control solenoid valve properly.

WITH GST

NOTE:
Be sure to read the explanation of Driving Pattern on EC-43, "Emission-related Diagnostic Information" before driving vehicle.
1. Start engine.
2. Drive vehicle according to Driving Pattern, EC-43, "Emission-related Diagnostic Information".
3. Stop vehicle.
4. Turn ignition switch OFF and wait at least 10 seconds.
5. Turn ignition switch ON.
6. Turn ignition switch OFF and wait at least 10 seconds.
7. Turn ignition switch ON.
8. Select Service $07 with GST.
   - If P0442 is displayed on the screen, go to EC-365, "Diagnosis Procedure".
   - If P0441 is displayed on the screen, go to Diagnostic Procedure for DTC P0441, EC-361.

Diagnosis Procedure

INFOID:0000000001717458

1. CHECK FUEL FILLER CAP DESIGN

1. Turn ignition switch OFF.

2. Check for genuine NISSAN fuel filler cap design.

OK or NG

OK >> GO TO 2.
NG >> Replace with genuine NISSAN fuel filler cap.

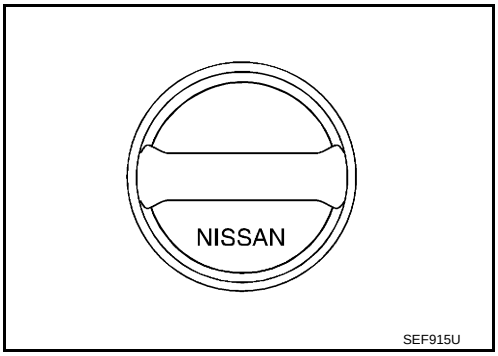

2. CHECK FUEL FILLER CAP INSTALLATION

Check that the cap is tightened properly by rotating the cap clockwise.

OK or NG

OK >> GO TO 3.
NG >> 1. Open fuel filler cap, then clean cap and fuel filler neck threads using air blower.
2. Retighten until ratcheting sound is heard.

3. CHECK FUEL FILLER CAP FUNCTION

Check for air releasing sound while opening the fuel filler cap.

OK or NG

OK >> GO TO 5.
NG >> GO TO 4.

4. CHECK FUEL TANK VACUUM RELIEF VALVE

Refer to EC-30, "Component Inspection".

OK or NG

OK >> GO TO 5.
NG >> Replace fuel filler cap with a genuine one.

5. INSTALL THE PRESSURE PUMP

To locate the EVAP leak, install EVAP service port adapter and pressure pump to EVAP service port securely.

NOTE:

Improper installation of the EVAP service port adapter to the EVAP service port may cause leaking.

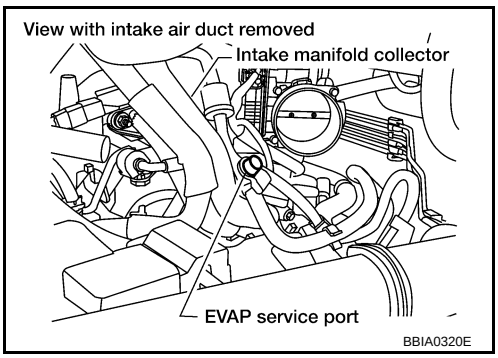

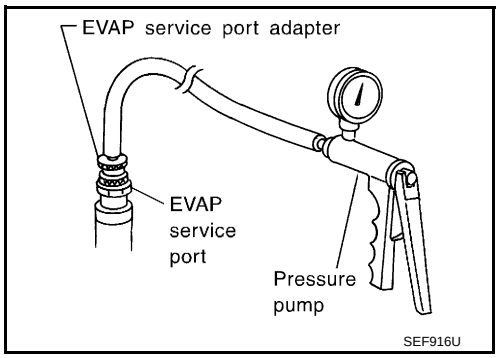

With CONSULT-III>>GO TO 6.
Without CONSULT-III>>GO TO 7.

6. CHECK FOR EVAP LEAK

With CONSULT-III

1. Turn ignition switch ON.
2. Select “EVAP SYSTEM CLOSE” of “WORK SUPPORT” mode with CONSULT-III.
3. Touch “START” and apply pressure into the EVAP line until the pressure indicator reaches the middle of the bar graph.
   CAUTION:
   - **Never use compressed air or a high pressure pump.**
   - **Do not exceed 4.12 kPa (0.042 kg/cm^2, 0.6 psi) of pressure in the system.**
4. Using EVAP leak detector, locate the EVAP leak. For the leak detector, refer to the instruction manual for more details.
   Refer to EC-28, "Description".

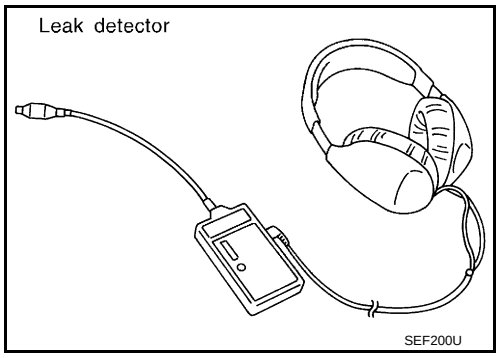

OK or NG

OK >> GO TO 8.
NG >> Repair or replace.

7. CHECK FOR EVAP LEAK

Without CONSULT-III

1. Turn ignition switch OFF.
2. Apply 12 volts DC to EVAP canister vent control valve. The valve will close. (Continue to apply 12 volts until the end of test.)

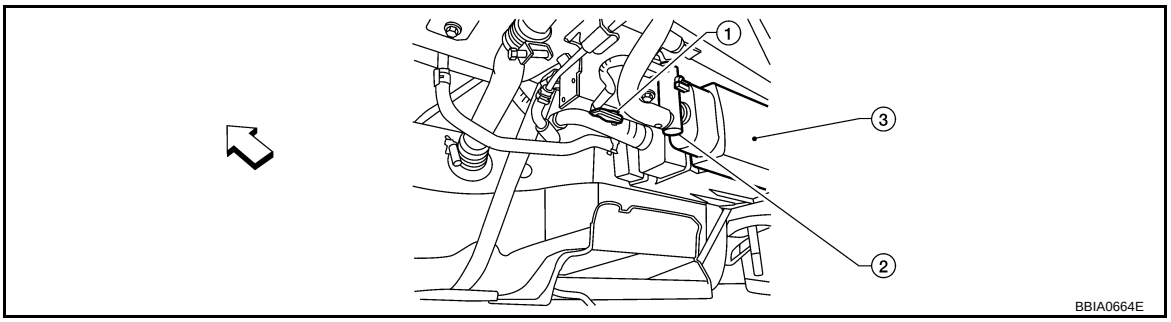

⇦ Vehicle front

1. EVAP control system pressure sensor 2. EVAP canister vent control valve 3. EVAP canister

3. Pressurize the EVAP line using pressure pump with 1.3 to 2.7 kPa (10 to 20 mmHg, 0.39 to 0.79 inHg), then remove pump and EVAP service port adapter.
   CAUTION:
   - **Never use compressed air or a high pressure pump.**
   - **Do not exceed 4.12 kPa (0.042 kg/cm^2, 0.6 psi) of pressure in the system.**
4. Using EVAP leak detector, locate the EVAP leak. For the leak detector, refer to the instruction manual for more details. Refer to EC-28, "Description".

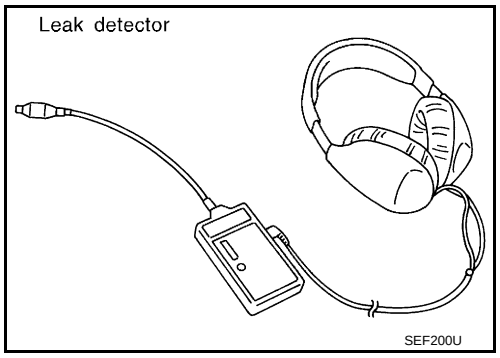

OK or NG

OK >> GO TO 8.
NG >> Repair or replace.

8. CHECK EVAP CANISTER VENT CONTROL VALVE

Check the following.
- EVAP canister vent control valve is installed properly.
  Refer to EC-32, "Removal and Installation".
- EVAP canister vent control valve.
  Refer to EC-389, "Component Inspection".

OK or NG

OK >> GO TO 9.
NG >> Repair or replace EVAP canister vent control valve and O-ring.

9. CHECK IF EVAP CANISTER SATURATED WITH WATER

1. Remove EVAP canister with EVAP canister vent control valve and EVAP control system pressure sensor attached.
2. Does water drain from the EVAP canister?

Yes or No

Yes >> GO TO 10.
No (With CONSULT-III)>>GO TO 12.
No (Without CONSULT-III)>>GO TO 13.

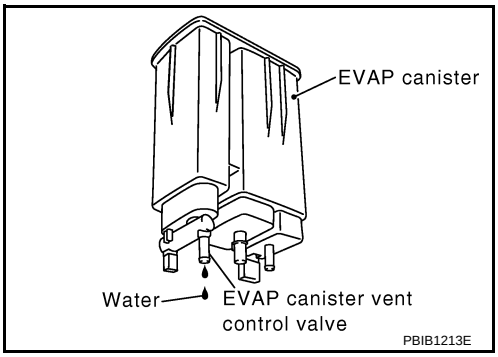

10. CHECK EVAP CANISTER

Weigh the EVAP canister with the EVAP canister vent control valve and EVAP control system pressure sensor attached.
The weight should be less than 2.1 kg (4.6 lb).

OK or NG

OK (With CONSULT-III)>>GO TO 12.
OK (Without CONSULT-III)>>GO TO 13.
NG >> GO TO 11.

11. DETECT MALFUNCTIONING PART

Check the following.
- EVAP canister for damage
- EVAP hose between EVAP canister and vehicle frame for clogging or poor connection

>> Repair hose or replace EVAP canister.

12. CHECK EVAP CANISTER PURGE VOLUME CONTROL SOLENOID VALVE OPERATION

With CONSULT-III
1. Disconnect vacuum hose to EVAP canister purge volume control solenoid valve at EVAP service port.
2. Start engine.
3. Perform “PURG VOL CONT/V” in “ACTIVE TEST” mode.
4. Touch “Qu” on CONSULT-III screen to increase “PURG VOL CONT/V” opening to 100%.
5. Check vacuum hose for vacuum when revving engine up to 2,000 rpm.

OK or NG

OK >> GO TO 15.
NG >> GO TO 14.

13. CHECK EVAP CANISTER PURGE VOLUME CONTROL SOLENOID VALVE OPERATION

Without CONSULT-III
1. Start engine and warm it up to normal operating temperature.
2. Stop engine.
3. Disconnect vacuum hose to EVAP canister purge volume control solenoid valve at EVAP service port.
4. Start engine and let it idle for at least 80 seconds.

5. Check vacuum hose for vacuum when revving engine up to 2,000 rpm.

Vacuum should exist.

OK or NG

OK >> GO TO 16.
NG >> GO TO 14.

14. CHECK VACUUM HOSE

Check vacuum hoses for clogging or disconnection. Refer to EC-96, "Vacuum Hose Drawing".

OK or NG

OK >> GO TO 15.
NG >> Repair or reconnect the hose.

15. CHECK EVAP CANISTER PURGE VOLUME CONTROL SOLENOID VALVE

Refer to EC-384, "Component Inspection".

OK or NG

OK >> GO TO 16.
NG >> Replace EVAP canister purge volume control solenoid valve.

16. CHECK FUEL TANK TEMPERATURE SENSOR

Refer to EC-294, "Component Inspection".

OK or NG

OK >> GO TO 17.
NG >> Replace fuel level sensor unit.

17. CHECK EVAP CONTROL SYSTEM PRESSURE SENSOR

Refer to EC-404, "Component Inspection".

OK or NG

OK >> GO TO 18.
NG >> Replace EVAP control system pressure sensor.

18. CHECK EVAP PURGE LINE

Check EVAP purge line (pipe, rubber tube, fuel tank and EVAP canister) for cracks or improper connection. Refer to EC-28, "Description".

OK or NG

OK >> GO TO 19.
NG >> Repair or reconnect the hose.

19. CLEAN EVAP PURGE LINE

Clean EVAP purge line (pipe and rubber tube) using air blower.

>> GO TO 20.

20. CHECK EVAP/ORVR LINE

Check EVAP/ORVR line between EVAP canister and fuel tank for clogging, kink, looseness and improper connection. For location, refer to EC-34.

OK or NG

OK >> GO TO 21.
NG >> Repair or replace hoses and tubes.

21. CHECK RECIRCULATION LINE

Check recirculation line between filler neck tube and fuel tank for clogging, kink, cracks, looseness and improper connection.

OK or NG

OK >> GO TO 22.
NG >> Repair or replace hose, tube or filler neck tube.

22. CHECK REFUELING EVAP VAPOR CUT VALVE

Refer to EC-36, "Component Inspection".

OK or NG

OK >> GO TO 23.
NG >> Replace refueling EVAP vapor cut valve with fuel tank.

23. CHECK FUEL LEVEL SENSOR

Refer to FL-5.

OK or NG

OK >> GO TO 24.
NG >> Replace fuel level sensor unit.

24. CHECK INTERMITTENT INCIDENT

Refer to EC-130.

>> **INSPECTION END**

DTC P0443 EVAP CANISTER PURGE VOLUME CONTROL SOLENOID VALVE

Description

INFOID:0000000001717459

SYSTEM DESCRIPTION

Sensor	Input Signal to ECM	ECM function	Actuator
Crankshaft position sensor (POS) Camshaft position sensor (PHASE)	Engine speed*1	EVAP canister purge flow control	EVAP canister purge volume control solenoid valve
Mass air flow sensor	Amount of intake air		
Engine coolant temperature sensor	Engine coolant temperature		
Battery	Battery voltage*1		
Throttle position sensor	Throttle position		
Accelerator pedal position sensor	Accelerator pedal position		
Air fuel ratio (A/F) sensors 1	Density of oxygen in exhaust gas (Mixture ratio feedback signal)		
Fuel tank temperature sensor	Fuel temperature in fuel tank		
Wheel sensor	Vehicle speed*2		

*1: ECM determines the start signal status by the signals of engine speed and battery voltage.

*2: This signal is sent to the ECM through CAN communication line.

This system controls flow rate of fuel vapor from the EVAP canister. The opening of the vapor by-pass passage in the EVAP canister purge volume control solenoid valve changes to control the flow rate. The EVAP canister purge volume control solenoid valve repeats ON/OFF operation according to the signal sent from the ECM. The opening of the valve varies for optimum engine control. The optimum value stored in the ECM is determined by considering various engine conditions. When the engine is operating, the flow rate of fuel vapor from the EVAP canister is regulated as the air flow changes.

COMPONENT DESCRIPTION

The EVAP canister purge volume control solenoid valve uses a ON/OFF duty to control the flow rate of fuel vapor from the EVAP canister. The EVAP canister purge volume control solenoid valve is moved by ON/OFF pulses from the ECM. The longer the ON pulse, the greater the amount of fuel vapor that will flow through the valve.

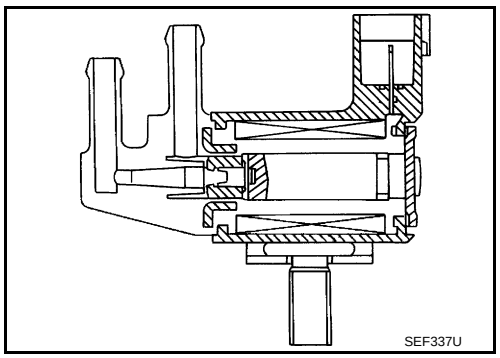

CONSULT-III Reference Value in Data Monitor Mode

INFOID:0000000001717460

Specification data are reference values.

MONITOR ITEM	CONDITION		SPECIFICATION
PURG VOL C/V	• Engine: After warming up • Shift lever: P or N • Air conditioner switch: OFF • No load	Idle (Accelerator pedal is not depressed even slightly, after engine starting)	0%
		2,000 rpm	—

On Board Diagnosis Logic

INFOID:0000000001717461

DTC No.	Trouble diagnosis name	DTC detecting condition	Possible cause
P0443 0443	EVAP canister purge volume control solenoid valve	The canister purge flow is detected during the specified driving conditions, even when EVAP canister purge volume control solenoid valve is completely closed.	• EVAP control system pressure sensor • EVAP canister purge volume control solenoid valve (The valve is stuck open.) • EVAP canister vent control valve • EVAP canister • Hoses (Hoses are connected incorrectly or clogged.)

DTC Confirmation Procedure

INFOID:0000000001717462

NOTE:
If DTC Confirmation Procedure has been previously conducted, always perform the following before conducting the next step.
1. Turn ignition switch OFF and wait at least 10 seconds.
2. Turn ignition switch ON.
3. Turn ignition switch OFF and wait at least 10 seconds.

TESTING CONDITION:
Always perform test at a temperature of 5°C (41°F) or more.

WITH CONSULT-III

1. Start engine and warm it up to normal operating temperature.
2. Turn ignition switch OFF and wait at least 10 seconds.
3. Turn ignition switch ON.
4. Turn ignition switch OFF and wait at least 10 seconds.
5. Turn ignition switch ON.
6. Select “PURG VOL CN/V P1444” of “EVAPORATIVE SYSTEM” in “DTC WORK SUPPORT” mode with CONSULT-III.
7. Touch “START”.
8. Start engine and let it idle until “TESTING” on CONSULT-III changes to “COMPLETED”. (It will take approximately 10 seconds.)
   If “TESTING” is not displayed after 5 minutes, retry from step 2.
9. Make sure that “OK” is displayed after touching “SELF-DIAG RESULTS”. If “NG” is displayed, refer to EC-374, "Diagnosis Procedure".

WITH GST

1. Start engine and warm it up to normal operating temperature.
2. Turn ignition switch OFF and wait at least 10 seconds.
3. Turn ignition switch ON.
4. Turn ignition switch OFF and wait at least 10 seconds.
5. Start engine and let it idle for at least 20 seconds.
6. Select Service $07 with GST.
7. Check 1st trip DTC.
8. If 1st trip DTC is detected, go to EC-374, "Diagnosis Procedure".

Wiring Diagram

INFOID:0000000001717463

EC-PGC/V-01

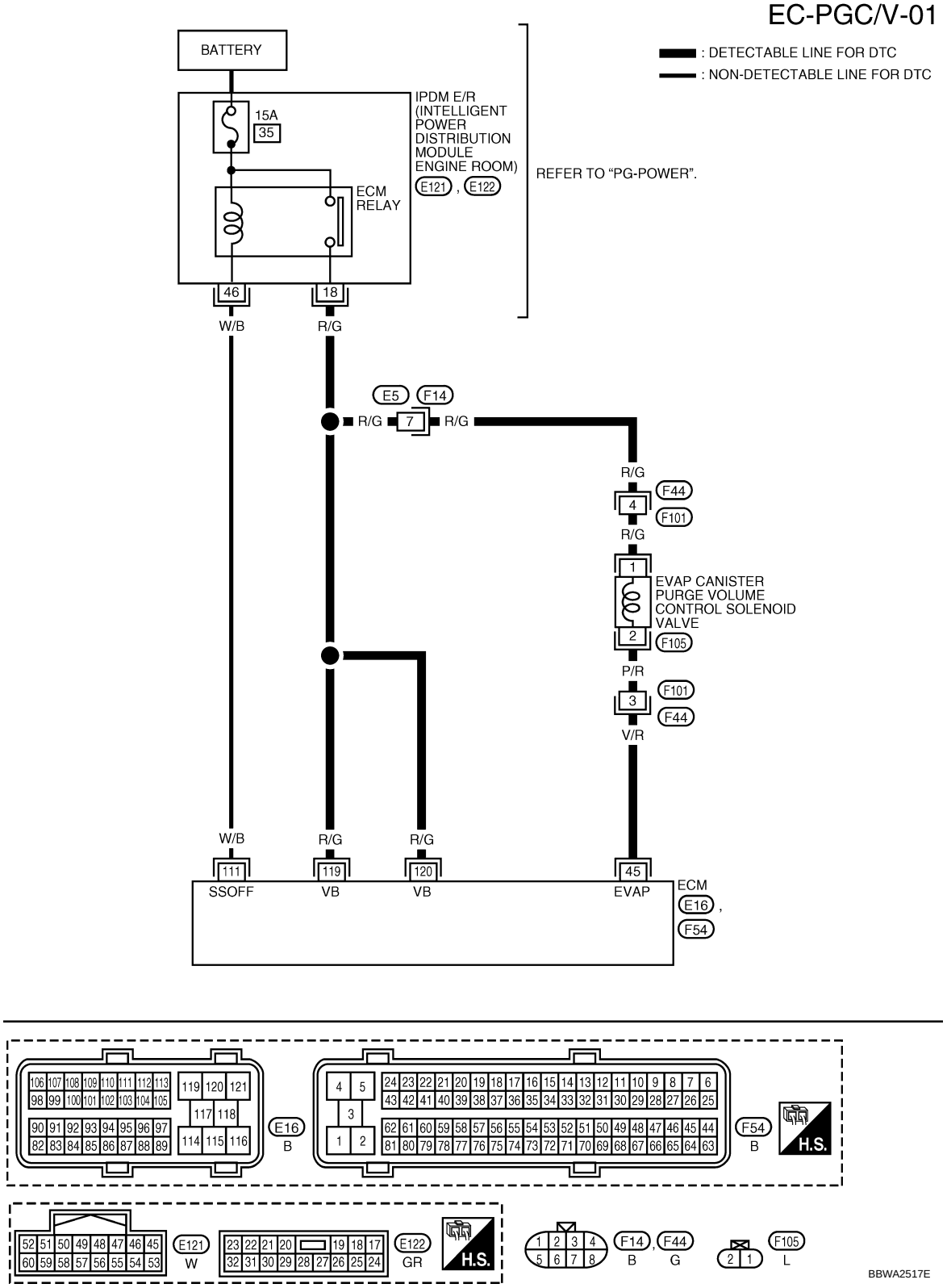

Specification data are reference values and are measured between each terminal and ground.
Pulse signal is measured by CONSULT-III.

CAUTION:

Do not use ECM ground terminals when measuring input/output voltage. Doing so may result in damage to the ECM's transistor. Use a ground other than ECM terminals, such as the ground.

TERMINAL NO.	WIRE COLOR	ITEM	CONDITION	DATA (DC Voltage)
45	V/R	EVAP canister purge volume control solenoid valve	**[Engine is running]** • Idle speed • Accelerator pedal: Not depressed even slightly, after engine starting	BATTERY VOLTAGE (11 - 14V)★ 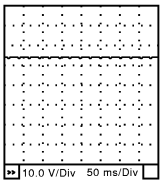 SEC990C
			[Engine is running] • Engine speed: About 2,000 rpm (More than 100 seconds after starting engine)	BATTERY VOLTAGE (11 - 14V)★ 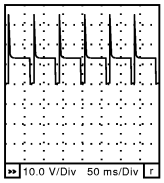 SEC991C
111	W/B	ECM relay (Self shut-off)	**[Engine is running]** **[Ignition switch: OFF]** • For a few seconds after turning ignition switch OFF	0 - 1.5V
			[Ignition switch: OFF] • More than a few seconds after turning ignition switch OFF	BATTERY VOLTAGE (11 - 14V)
119 120	R/G R/G	Power supply for ECM	**[Ignition switch: ON]**	BATTERY VOLTAGE (11 - 14V)

★: Average voltage for pulse signal (Actual pulse signal can be confirmed by oscilloscope.)

Diagnosis Procedure

INFOID:0000000001717464

1. CHECK EVAP CANISTER PURGE VOLUME CONTROL SOLENOID VALVE POWER SUPPLY CIRCUIT

1. Turn ignition switch OFF.
2. Disconnect EVAP canister purge volume control solenoid valve harness connector.
3. Turn ignition switch ON.

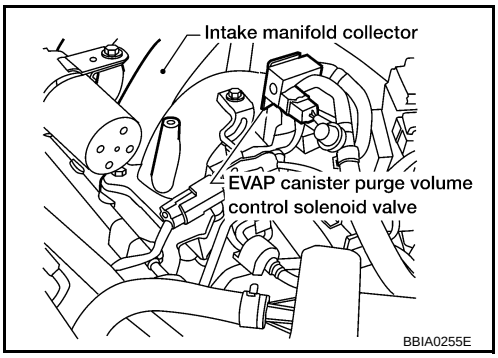

4. Check voltage between EVAP canister purge volume control solenoid valve terminal 1 and ground with CONSULT-III or tester.

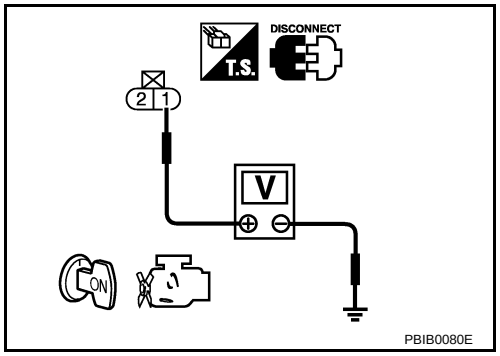

Voltage: Battery voltage

OK or NG

OK >> GO TO 3.
NG >> GO TO 2.

2. DETECT MALFUNCTIONING PART

Check the following.
- Harness connectors E5, F14
- Harness connectors F44, F101
- Harness for open or short between EVAP canister purge volume control solenoid valve and IPDM E/R
- Harness for open or short between EVAP canister purge volume control solenoid valve and ECM

>> Repair harness or connectors.

3. CHECK EVAP CANISTER PURGE VOLUME CONTROL SOLENOID VALVE OUTPUT SIGNAL CIRCUIT FOR OPEN AND SHORT

1. Turn ignition switch OFF.
2. Disconnect ECM harness connector.
3. Check harness continuity between ECM terminal 45 and EVAP canister purge volume control solenoid valve terminal 2. Refer to Wiring Diagram.

Continuity should exist.

4. Also check harness for short to ground and short to power.

OK or NG

OK >> GO TO 5.
NG >> GO TO 4.

4. DETECT MALFUNCTIONING PART

Check the following.
- Harness connectors F44, F101
- Harness for open or short between EVAP canister purge volume control solenoid valve and ECM

>> Repair open circuit or short to ground or short to power in harness or connectors.

5. CHECK EVAP CONTROL SYSTEM PRESSURE SENSOR CONNECTOR

1. Disconnect EVAP control system pressure sensor harness connector.

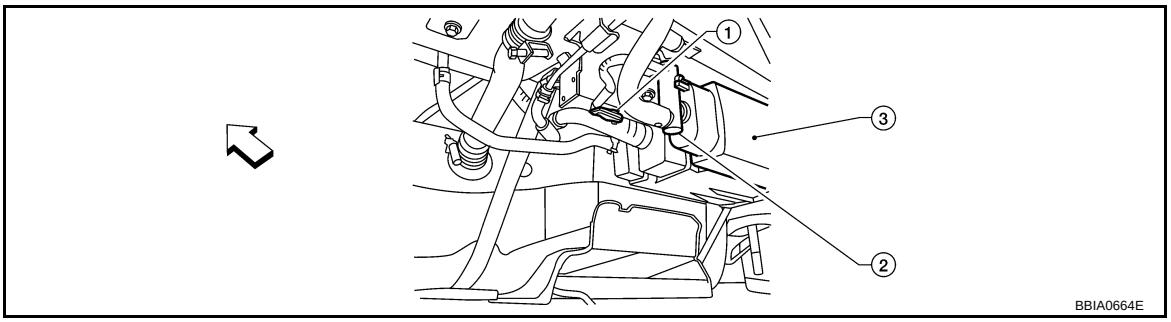

⇦: Vehicle front

1. EVAP control system pressure sensor 2. EVAP canister vent control valve 3. EVAP canister

2. Check connectors for water.

Water should not exist.

OK or NG

OK >> GO TO 6.
NG >> Replace EVAP control system pressure sensor.

6. CHECK EVAP CONTROL SYSTEM PRESSURE SENSOR

Refer to EC-404, "Component Inspection".

OK or NG

OK (With CONSULT-III)>>GO TO 7.
OK (Without CONSULT-III)>>GO TO 8.
NG >> Replace EVAP control system pressure sensor.

7. CHECK EVAP CANISTER PURGE VOLUME CONTROL SOLENOID VALVE

With CONSULT-III

1. Turn ignition switch OFF.
2. Reconnect all harness connectors disconnected.
3. Start engine.
4. Perform “PURG VOL CONT/V” in “ACTIVE TEST” mode with CONSULT-III. Check that engine speed varies according to the valve opening.

OK or NG

OK >> GO TO 9.
NG >> GO TO 8.

8. CHECK EVAP CANISTER PURGE VOLUME CONTROL SOLENOID VALVE

Refer to EC-377, "Component Inspection".

OK or NG

OK >> GO TO 9.
NG >> Replace EVAP canister purge volume control solenoid valve.

9. CHECK RUBBER TUBE FOR CLOGGING

1. Disconnect rubber tube connected to EVAP canister vent control valve.
2. Check the rubber tube for clogging.

OK or NG

OK >> GO TO 10.
NG >> Clean the rubber tube using an air blower.

10. CHECK EVAP CANISTER VENT CONTROL VALVE

Refer to EC-389, "Component Inspection".

OK or NG

OK >> GO TO 11.
NG >> Replace EVAP canister vent control valve.

11. CHECK IF EVAP CANISTER SATURATED WITH WATER

1. Remove EVAP canister with EVAP canister vent control valve and EVAP control system pressure sensor attached.

2. Does water drain from the EVAP canister?.

Yes or No

Yes >> GO TO 12.
No >> GO TO 14.

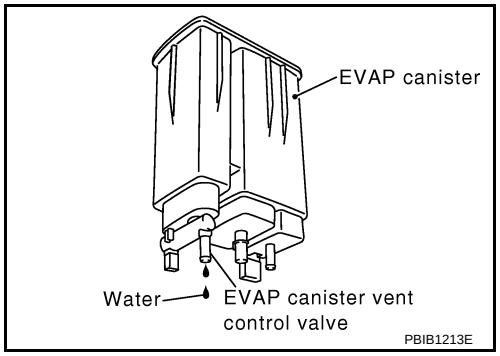

12. CHECK EVAP CANISTER

Weigh the EVAP canister with the EVAP canister vent control valve and EVAP control system pressure sensor attached.

The weight should be less than 2.1 kg (4.6 lb).

OK or NG

OK >> GO TO 14.
NG >> GO TO 13.

13. DETECT MALFUNCTIONING PART

Check the following.
- EVAP canister for damage
- EVAP hose between EVAP canister and vehicle frame for clogging or poor connection

>> Repair hose or replace EVAP canister.

14. CHECK INTERMITTENT INCIDENT

Refer to EC-130.

>> **INSPECTION END**

Component Inspection

INFOID:0000000001717465

EVAP CANISTER PURGE VOLUME CONTROL SOLENOID VALVE

With CONSULT-III

Check air passage continuity of EVAP canister purge volume control solenoid valve using “PURG VOL CONT/V” in “ACTIVE TEST” mode with CONSULT-III under the following conditions.

Condition (PURG VOL CONT/V value)	Air passage continuity between A and B
100%	Yes
0%	No

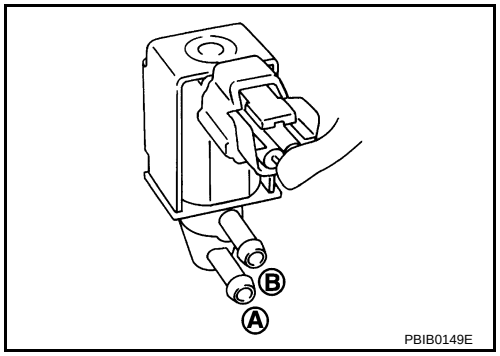

Without CONSULT-III

Check air passage continuity of EVAP canister purge volume control solenoid valve under the following conditions.

Condition	Air passage continuity between A and B
12V direct current supply between terminals 1 and 2	Yes
No supply	No

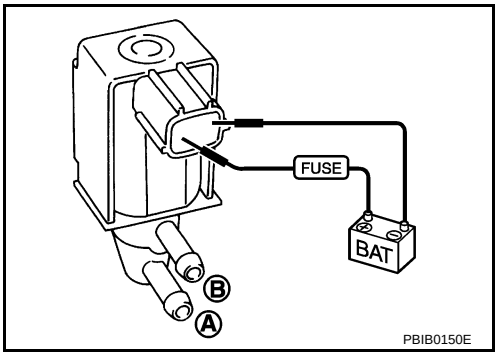

Removal and Installation

INFOID:0000000001717466

EVAP CANISTER PURGE VOLUME CONTROL SOLENOID VALVE
Refer to EM-17.

DTC P0444, P0445 EVAP CANISTER PURGE VOLUME CONTROL SOLENOID VALVE

Description

INFOID:0000000001717467

SYSTEM DESCRIPTION

Sensor	Input Signal to ECM	ECM function	Actuator
Crankshaft position sensor (POS) Camshaft position sensor (PHASE)	Engine speed*1	EVAP canister purge flow control	EVAP canister purge volume control solenoid valve
Mass air flow sensor	Amount of intake air		
Engine coolant temperature sensor	Engine coolant temperature		
Battery	Battery voltage*1		
Throttle position sensor	Throttle position		
Accelerator pedal position sensor	Accelerator pedal position		
Air fuel ratio (A/F) sensors 1	Density of oxygen in exhaust gas (Mixture ratio feedback signal)		
Fuel tank temperature sensor	Fuel temperature in fuel tank		
Wheel sensor	Vehicle speed*2		

*1: ECM determines the start signal status by the signals of engine speed and battery voltage.

*2: This signal is sent to the ECM through CAN communication line.

This system controls flow rate of fuel vapor from the EVAP canister. The opening of the vapor by-pass passage in the EVAP canister purge volume control solenoid valve changes to control the flow rate. The EVAP canister purge volume control solenoid valve repeats ON/OFF operation according to the signal sent from the ECM. The opening of the valve varies for optimum engine control. The optimum value stored in the ECM is determined by considering various engine conditions. When the engine is operating, the flow rate of fuel vapor from the EVAP canister is regulated as the air flow changes.

COMPONENT DESCRIPTION

The EVAP canister purge volume control solenoid valve uses a ON/OFF duty to control the flow rate of fuel vapor from the EVAP canister. The EVAP canister purge volume control solenoid valve is moved by ON/OFF pulses from the ECM. The longer the ON pulse, the greater the amount of fuel vapor that will flow through the valve.

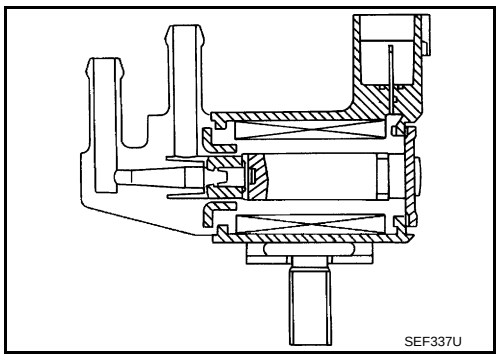

CONSULT-III Reference Value in Data Monitor Mode

INFOID:0000000001717468

Specification data are reference values.

MONITOR ITEM	CONDITION		SPECIFICATION
PURG VOL C/V	• Engine: After warming up • Shift lever: P or N • Air conditioner switch: OFF • No load	Idle (Accelerator pedal is not depressed even slightly, after engine starting)	0%
		2,000 rpm	—

On Board Diagnosis Logic

INFOID:0000000001717469

DTC No.	Trouble diagnosis name	DTC detecting condition	Possible cause
P0444 0444	EVAP canister purge volume control solenoid valve circuit open	An excessively low voltage signal is sent to ECM through the valve	• Harness or connectors (The solenoid valve circuit is open or shorted.) • EVAP canister purge volume control solenoid valve
P0445 0445	EVAP canister purge volume control solenoid valve circuit shorted	An excessively high voltage signal is sent to ECM through the valve	• Harness or connectors (The solenoid valve circuit is shorted.) • EVAP canister purge volume control solenoid valve

DTC Confirmation Procedure

INFOID:0000000001717470

NOTE:
If DTC Confirmation Procedure has been previously conducted, always perform the following before conducting the next step.
1. Turn ignition switch OFF and wait at least 10 seconds.
2. Turn ignition switch ON.
3. Turn ignition switch OFF and wait at least 10 seconds.

TESTING CONDITION:
Before performing the following procedure, confirm battery voltage is more than 11V at idle.

1. Start engine and let it idle for at least 13 seconds.
2. Check 1st trip DTC.
3. If 1st trip DTC is detected, go to EC-382, "Diagnosis Procedure".

Wiring Diagram

INFOID:0000000001717471

EC-PGC/V-01

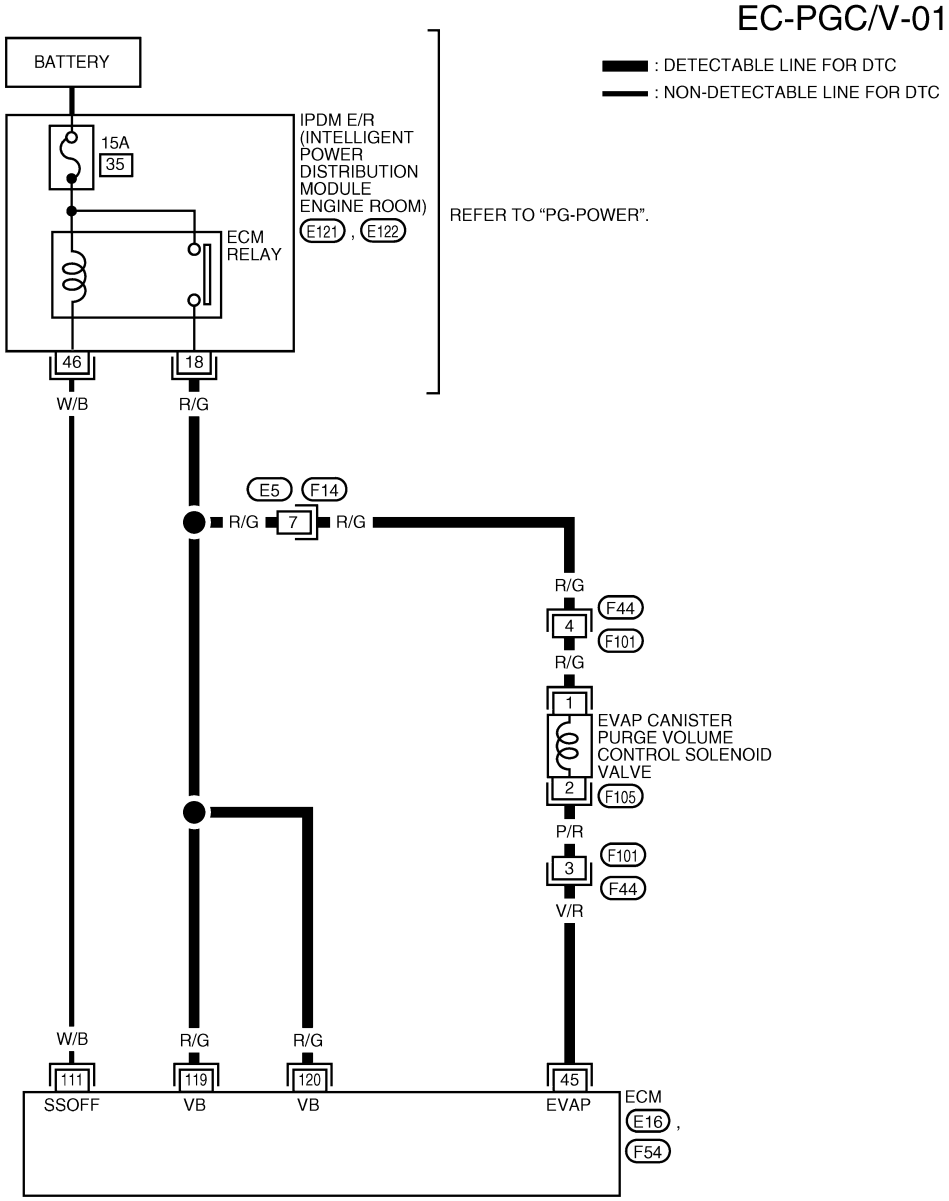

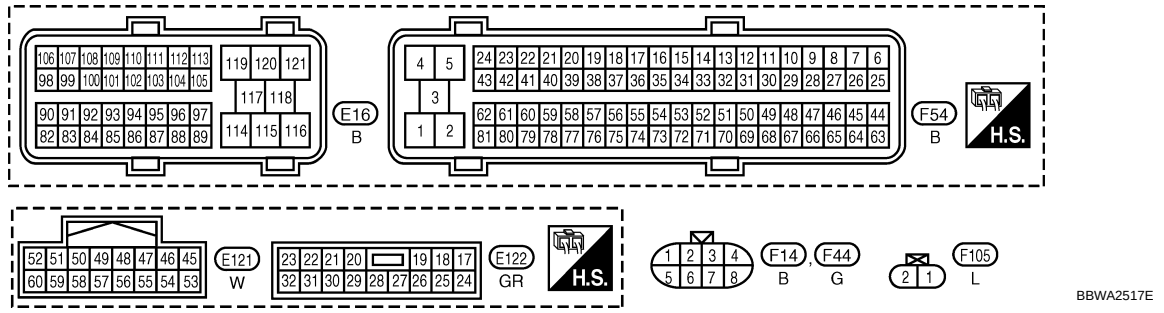

Specification data are reference values and are measured between each terminal and ground.
Pulse signal is measured by CONSULT-III.

CAUTION:

Do not use ECM ground terminals when measuring input/output voltage. Doing so may result in damage to the ECM's transistor. Use a ground other than ECM terminals, such as the ground.

TERMINAL NO.	WIRE COLOR	ITEM	CONDITION	DATA (DC Voltage)
45	V/R	EVAP canister purge volume control solenoid valve	**[Engine is running]** • Idle speed • Accelerator pedal: Not depressed even slightly, after engine starting	BATTERY VOLTAGE (11 - 14V)★ 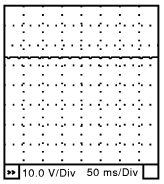 SEC990C
			[Engine is running] • Engine speed: About 2,000 rpm (More than 100 seconds after starting engine)	BATTERY VOLTAGE (11 - 14V)★ 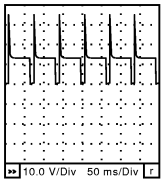 SEC991C
111	W/B	ECM relay (Self shut-off)	**[Engine is running]** **[Ignition switch: OFF]** • For a few seconds after turning ignition switch OFF	0 - 1.5V
			[Ignition switch: OFF] • More than a few seconds after turning ignition switch OFF	BATTERY VOLTAGE (11 - 14V)
119 120	R/G R/G	Power supply for ECM	**[Ignition switch: ON]**	BATTERY VOLTAGE (11 - 14V)

★: Average voltage for pulse signal (Actual pulse signal can be confirmed by oscilloscope.)

Diagnosis Procedure

INFOID:0000000001717472

1. CHECK EVAP CANISTER PURGE VOLUME CONTROL SOLENOID VALVE POWER SUPPLY CIRCUIT

1. Turn ignition switch OFF.
2. Disconnect EVAP canister purge volume control solenoid valve harness connector.
3. Turn ignition switch ON.

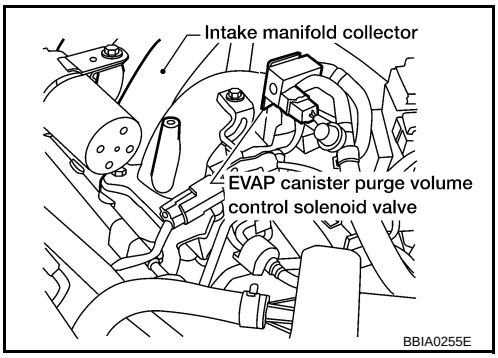

4. Check voltage between EVAP canister purge volume control solenoid valve terminal 1 and ground with CONSULT-III or tester.

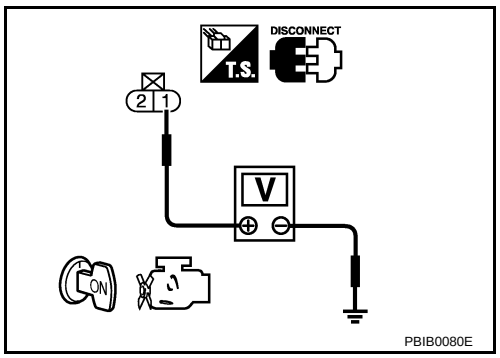

Voltage: Battery voltage

OK or NG

OK >> GO TO 3.
NG >> GO TO 2.

2. DETECT MALFUNCTIONING PART

Check the following.
- Harness connectors E5, F14
- Harness connectors F44, F101
- Harness for open or short between EVAP canister purge volume control solenoid valve and IPDM E/R
- Harness for open or short between EVAP canister purge volume control solenoid valve and ECM

>> Repair harness or connectors.

3. CHECK EVAP CANISTER PURGE VOLUME CONTROL SOLENOID VALVE OUTPUT SIGNAL CIRCUIT FOR OPEN AND SHORT

1. Turn ignition switch OFF.
2. Disconnect ECM harness connector.
3. Check harness continuity between ECM terminal 45 and EVAP canister purge volume control solenoid valve terminal 2. Refer to Wiring Diagram.

Continuity should exist.

4. Also check harness for short to ground and short to power.

OK or NG

OK (With CONSULT-III)>>GO TO 5.
OK (Without CONSULT-III)>>GO TO 6.
NG >> GO TO 4.

4. DETECT MALFUNCTIONING PART

Check the following.
- Harness connectors F44, F101
- Harness for open or short between EVAP canister purge volume control solenoid valve and ECM

>> Repair open circuit or short to ground or short to power in harness or connectors.

5. CHECK EVAP CANISTER PURGE VOLUME CONTROL SOLENOID VALVE OPERATION

With CONSULT-III
1. Reconnect all harness connectors disconnected.
2. Start engine.
3. Perform “PURG VOL CONT/V” in “ACTIVE TEST” mode with CONSULT-III. Check that engine speed varies according to the valve opening.

OK or NG

OK >> GO TO 7.
NG >> GO TO 6.

6. CHECK EVAP CANISTER PURGE VOLUME CONTROL SOLENOID VALVE

Refer to EC-384, "Component Inspection".

OK or NG

OK >> GO TO 7.
NG >> Replace EVAP canister purge volume control solenoid valve.

7. CHECK INTERMITTENT INCIDENT

Refer to EC-130.

>> **INSPECTION END**

Component Inspection

INFOID:0000000001717473

EVAP CANISTER PURGE VOLUME CONTROL SOLENOID VALVE

With CONSULT-III

Check air passage continuity of EVAP canister purge volume control solenoid valve using “PURG VOL CONT/V” in “ACTIVE TEST” mode with CONSULT-III under the following conditions.

Condition (PURG VOL CONT/V value)	Air passage continuity between A and B
100%	Yes
0%	No

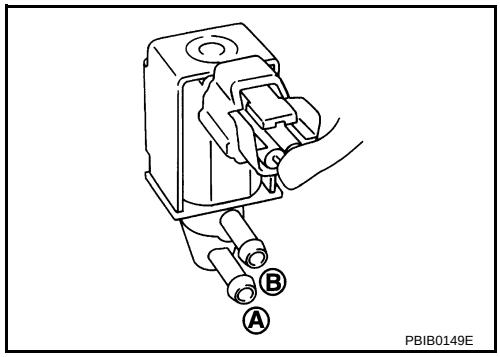

Without CONSULT-III

Check air passage continuity of EVAP canister purge volume control solenoid valve under the following conditions.

Condition	Air passage continuity between A and B
12V direct current supply between terminals 1 and 2	Yes
No supply	No

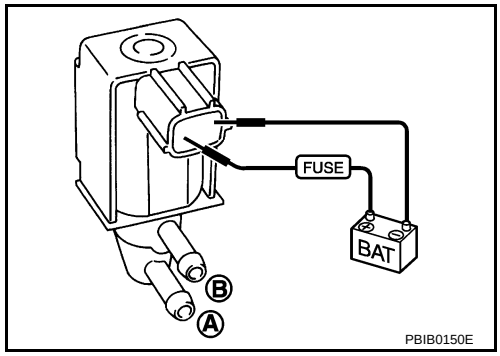

Removal and Installation

INFOID:0000000001717474

EVAP CANISTER PURGE VOLUME CONTROL SOLENOID VALVE

Refer to EM-17

.

DTC P0447 EVAP CANISTER VENT CONTROL VALVE

Component Description

INFOID:0000000001717475

The EVAP canister vent control valve is located on the EVAP canister and is used to seal the canister vent.
This solenoid valve responds to signals from the ECM. When the ECM sends an ON signal, the coil in the solenoid valve is energized. A plunger will then move to seal the canister vent. The ability to seal the vent is necessary for the on board diagnosis of other evaporative emission control system components.
This solenoid valve is used only for diagnosis, and usually remains opened.
When the vent is closed, under normal purge conditions, the evaporative emission control system is depressurized and allows EVAP Control System diagnosis.

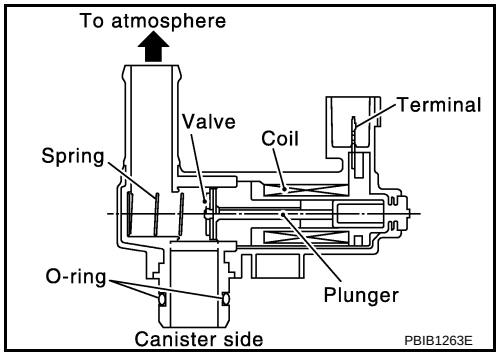

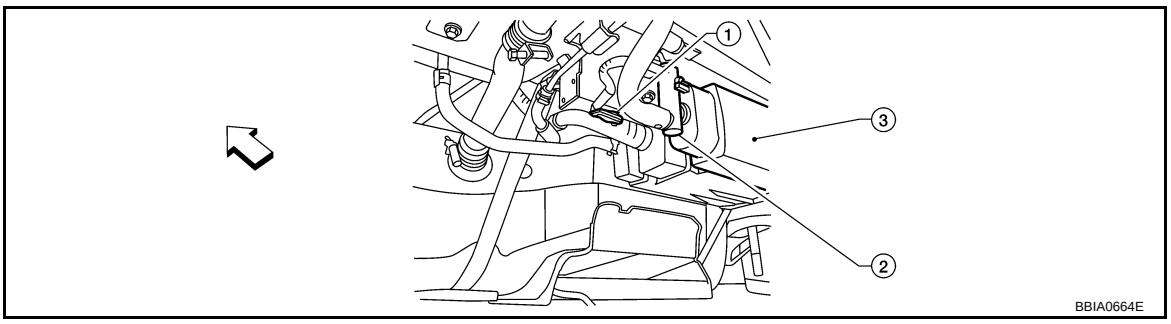

⇦: Vehicle front

1. EVAP control system pressure sensor 2. EVAP canister vent control valve 3. EVAP canister

CONSULT-III Reference Value in Data Monitor Mode

INFOID:0000000001717476

Specification data are reference values.

MONITOR ITEM	CONDITION	SPECIFICATION
VENT CONT/V	• Ignition switch: ON	OFF

On Board Diagnosis Logic

INFOID:0000000001717477

DTC No.	Trouble diagnosis name	DTC detecting condition	Possible cause
P0447 0447	EVAP canister vent control valve circuit open	An improper voltage signal is sent to ECM through EVAP canister vent control valve.	• Harness or connectors (The valve circuit is open or shorted.) • EVAP canister vent control valve

DTC Confirmation Procedure

INFOID:0000000001717478

NOTE:
If DTC Confirmation Procedure has been previously conducted, always perform the following before conducting the next step.
1. Turn ignition switch OFF and wait at least 10 seconds.
2. Turn ignition switch ON.
3. Turn ignition switch OFF and wait at least 10 seconds.

TESTING CONDITION:
Before performing the following procedure, confirm battery voltage is more than 11V at idle.

1. Start engine and wait at least 8 seconds.

2. Check 1st trip DTC.
3. If 1st trip DTC is detected, go to EC-387, "Diagnosis Procedure".

Wiring Diagram

INFOID:0000000001717479

EC-VENT/V-01

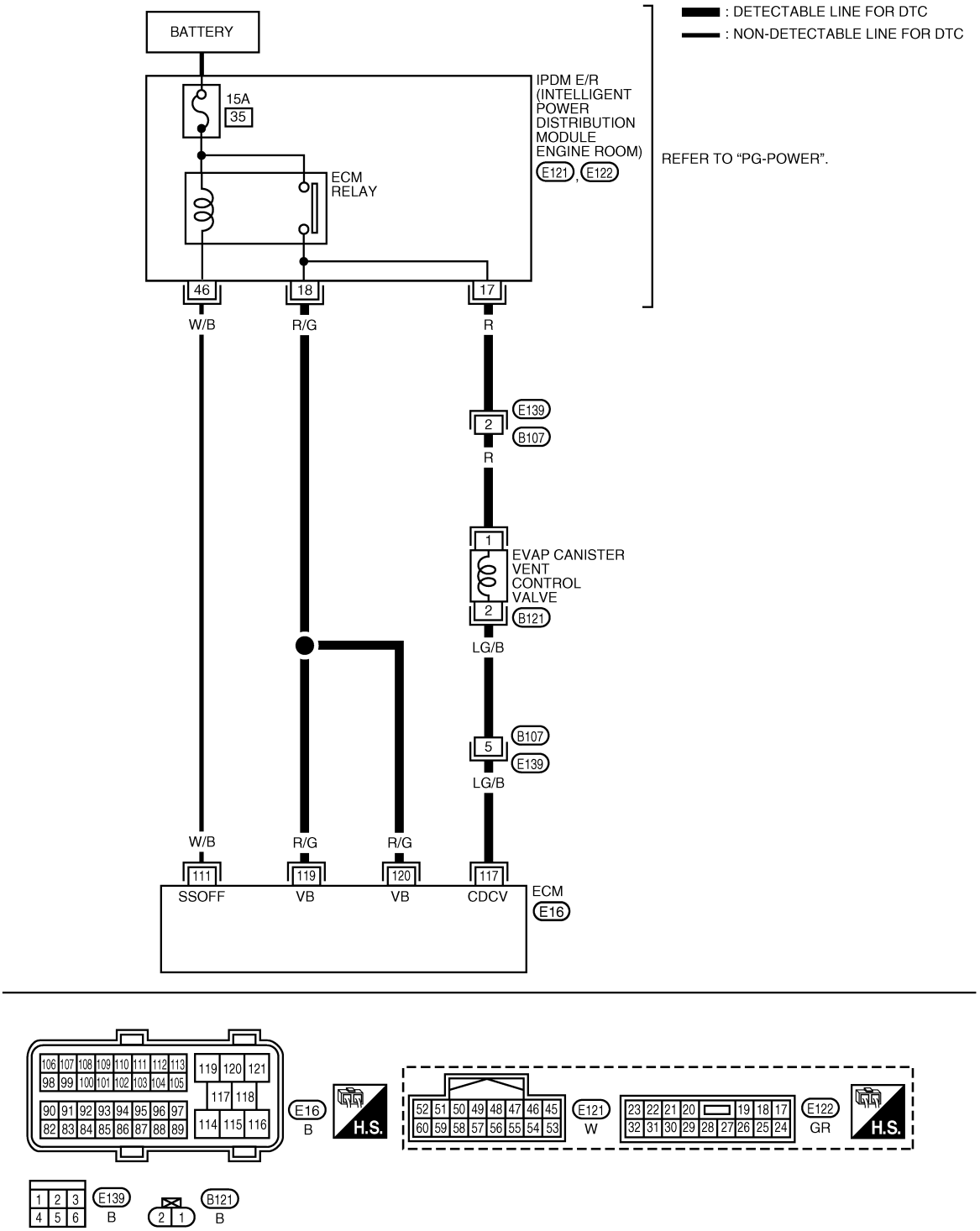

Specification data are reference values and are measured between each terminal and ground.

CAUTION:

Do not use ECM ground terminals when measuring input/output voltage. Doing so may result in damage to the ECM's transistor. Use a ground other than ECM terminals, such as the ground.

TERMINAL NO.	WIRE COLOR	ITEM	CONDITION	DATA (DC Voltage)
111	W/B	ECM relay (Self shut-off)	**[Engine is running]** **[Ignition switch: OFF]** • For a few seconds after turning ignition switch OFF	0 - 1.5V
			[Ignition switch: OFF] • More than a few seconds after turning ignition switch OFF	BATTERY VOLTAGE (11 - 14V)
117	LG/B	EVAP canister vent control valve	**[Ignition switch: ON]**	BATTERY VOLTAGE (11 - 14V)
119 120	R/G R/G	Power supply for ECM	**[Ignition switch: ON]**	BATTERY VOLTAGE (11 - 14V)

Diagnosis Procedure

INFOID:0000000001717480

1. INSPECTION START

Do you have CONSULT-III?

Yes or No

Yes >> GO TO 2.
No >> GO TO 3.

2. CHECK EVAP CANISTER VENT CONTROL VALVE CIRCUIT

With CONSULT-III

1. Turn ignition switch OFF and then turn ON.
2. Select “VENT CONTROL/V” in “ACTIVE TEST” mode with CONSULT-III.
3. Touch “ON/OFF” on CONSULT-III screen.
4. Check for operating sound of the valve.

Clicking noise should be heard.

OK or NG

OK >> GO TO 7.
NG >> GO TO 3.

3. CHECK EVAP CANISTER VENT CONTROL VALVE POWER SUPPLY CIRCUIT

1. Turn ignition switch OFF.
2. Disconnect EVAP canister vent control valve harness connector.

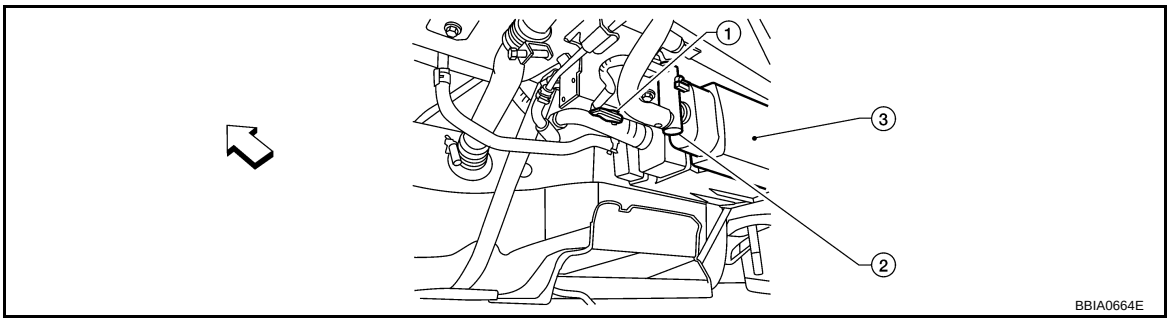

⇦: Vehicle front

1. EVAP control system pressure sensor 2. EVAP canister vent control valve 3. EVAP canister

3. Turn ignition switch ON.

4. Check voltage between EVAP canister vent control valve terminal 1 and ground with CONSULT-III or tester.

Voltage: Battery voltage

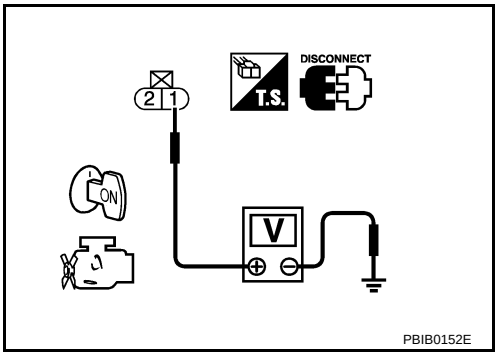

OK or NG

OK >> GO TO 5.
NG >> GO TO 4.

4. DETECT MALFUNCTIONING PART

Check the following.
- Harness connectors B107, E139
- Harness for open or short between EVAP canister vent control valve and IPDM E/R

>> Repair harness or connectors.

5. CHECK EVAP CANISTER VENT CONTROL VALVE OUTPUT SIGNAL CIRCUIT FOR OPEN AND SHORT

1. Turn ignition switch OFF.
2. Disconnect ECM harness connector.
3. Check harness continuity between ECM terminal 117 and EVAP canister vent control valve terminal 2. Refer to Wiring Diagram.

Continuity should exist.

4. Also check harness for short to ground and short to power.

OK or NG

OK >> GO TO 7.
NG >> GO TO 6.

6. DETECT MALFUNCTIONING PART

Check the following.
- Harness connectors B107, E139
- Harness for open or short between EVAP canister vent control valve and ECM

>> Repair open circuit or short to ground or short to power in harness or connectors.

7. CHECK RUBBER TUBE FOR CLOGGING

1. Disconnect rubber tube connected to EVAP canister vent control valve.
2. Check the rubber tube for clogging.

OK or NG

OK >> GO TO 8.
NG >> Clean the rubber tube using an air blower.

8. CHECK EVAP CANISTER VENT CONTROL VALVE

Refer to EC-389, "Component Inspection".

OK or NG

OK >> GO TO 9.
NG >> Replace EVAP canister vent control valve.

9. CHECK INTERMITTENT INCIDENT

Refer to EC-130.

>> **INSPECTION END**

Component Inspection

INFOID:0000000001717481

EVAP CANISTER VENT CONTROL VALVE

With CONSULT-III

1. Remove EVAP canister vent control valve from EVAP canister.
2. Check portion **B** of EVAP canister vent control valve for being rusted.
   If NG, replace EVAP canister vent control valve.
   If OK, go to next step.
3. Reconnect all harness connectors disconnected.
4. Turn ignition switch ON.
5. Perform “VENT CONTROL/V” in “ACTIVE TEST” mode.
6. Check air passage continuity and operation delay time.
   Make sure new O-ring is installed properly.

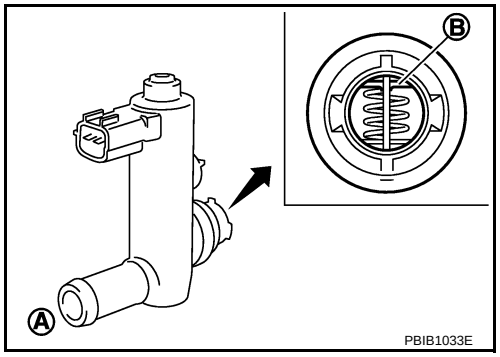

Condition VENT CONTROL/V	Air passage continuity between A and B
ON	No
OFF	Yes

Operation takes less than 1 second.
If NG, replace EVAP canister vent control valve.
If OK, go to next step.

7. Clean the air passage (Portion **A** to **B**) of EVAP canister vent control valve using an air blower.
8. Perform step 6 again.

Without CONSULT-III

1. Remove EVAP canister vent control valve from EVAP canister.
2. Check portion **B** of EVAP canister vent control valve for being rusted.

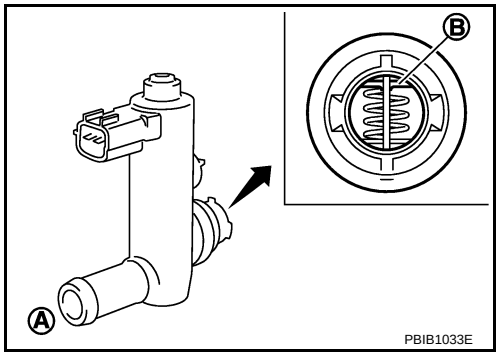

3. Check air passage continuity and operation delay time under the following conditions.
   Make sure new O-ring is installed properly.

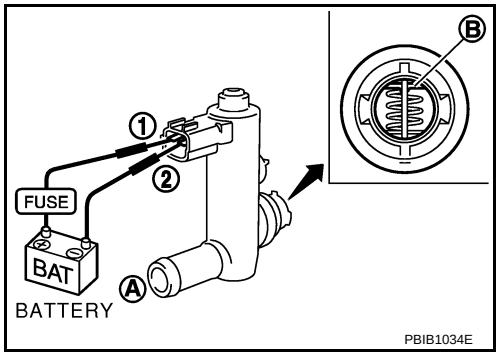

Condition	Air passage continuity between A and B
12V direct current supply between terminals 1 and 2	No
OFF	Yes

Operation takes less than 1 second.
If NG, replace EVAP canister vent control valve.
If OK, go to next step.

4. Clean the air passage (Portion **A** to **B**) of EVAP canister vent control valve using an air blower.
5. Perform step 3 again.

DTC P0448 EVAP CANISTER VENT CONTROL VALVE

Component Description

INFOID:0000000001717482

The EVAP canister vent control valve is located on the EVAP canister and is used to seal the canister vent.
This solenoid valve responds to signals from the ECM. When the ECM sends an ON signal, the coil in the solenoid valve is energized. A plunger will then move to seal the canister vent. The ability to seal the vent is necessary for the on board diagnosis of other evaporative emission control system components.
This solenoid valve is used only for diagnosis, and usually remains opened.
When the vent is closed, under normal purge conditions, the evaporative emission control system is depressurized and allows EVAP Control System diagnosis.

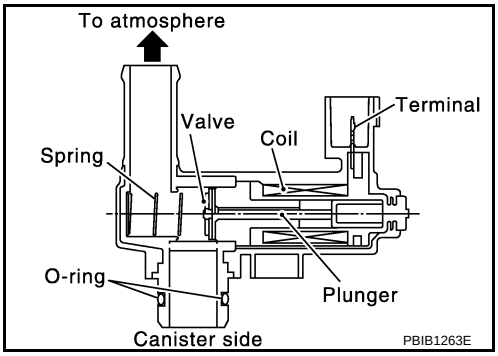

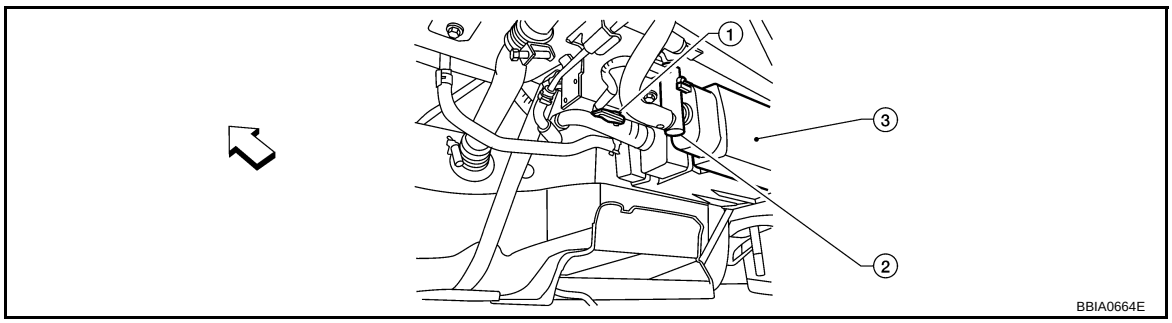

⇦: Vehicle front

1. EVAP control system pressure sensor
2. EVAP canister vent control valve
3. EVAP canister

CONSULT-III Reference Value in Data Monitor Mode

INFOID:0000000001717483

Specification data are reference values.

MONITOR ITEM	CONDITION	SPECIFICATION
VENT CONT/V	• Ignition switch: ON	OFF

On Board Diagnosis Logic

INFOID:0000000001717484

DTC No.	Trouble diagnosis name	DTC detecting condition	Possible cause
P0448 0448	EVAP canister vent control valve close	EVAP canister vent control valve remains closed under specified driving conditions.	• EVAP canister vent control valve • EVAP control system pressure sensor and the circuit • Blocked rubber tube to EVAP canister vent control valve • EVAP canister is saturated with water

DTC Confirmation Procedure

INFOID:0000000001717485

NOTE:
If DTC Confirmation Procedure has been previously conducted, always perform the following before conducting the next step.
1. Turn ignition switch OFF and wait at least 10 seconds.
2. Turn ignition switch ON.
3. Turn ignition switch OFF and wait at least 10 seconds.

WITH CONSULT-III

1. Turn ignition switch ON and wait at least 5 seconds.
2. Turn ignition switch OFF and wait at least 10 seconds.
3. Start engine and let it idle for at least 1 minute.
4. Repeat next procedures three times.

a. Increase the engine speed up to 3,000 to 3,500 rpm and keep it for 2 minutes and 50 seconds to 3 minutes.
Never exceed 3 minutes.

b. Fully released accelerator pedal and keep engine idle for about 5 seconds.

5. Check 1st trip DTC.
6. If 1st trip DTC is detected, go to EC-393, "Diagnosis Procedure".
If 1st trip DTC is not detected, go to the next step.
7. Repeat next procedure 20 times.

a. Quickly increase the engine speed up to 4,000 to 4,500 rpm or more and keep it for 25 to 30 seconds.

b. Fully released accelerator pedal and keep engine idle for at least 35 seconds.

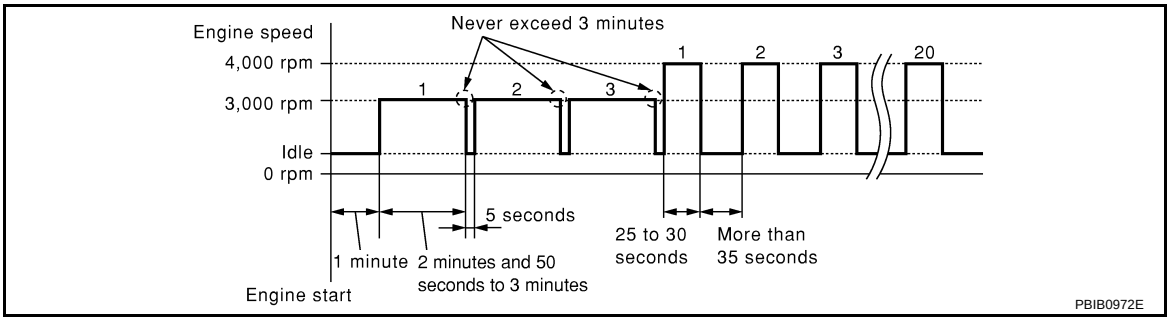

8. Check 1st trip DTC.
9. If 1st trip DTC is detected, go to EC-393, "Diagnosis Procedure".

WITH GST

Follow the procedure “WITH CONSULT-III” above.

Wiring Diagram

INFOID:0000000001717486

EC-VENT/V-01

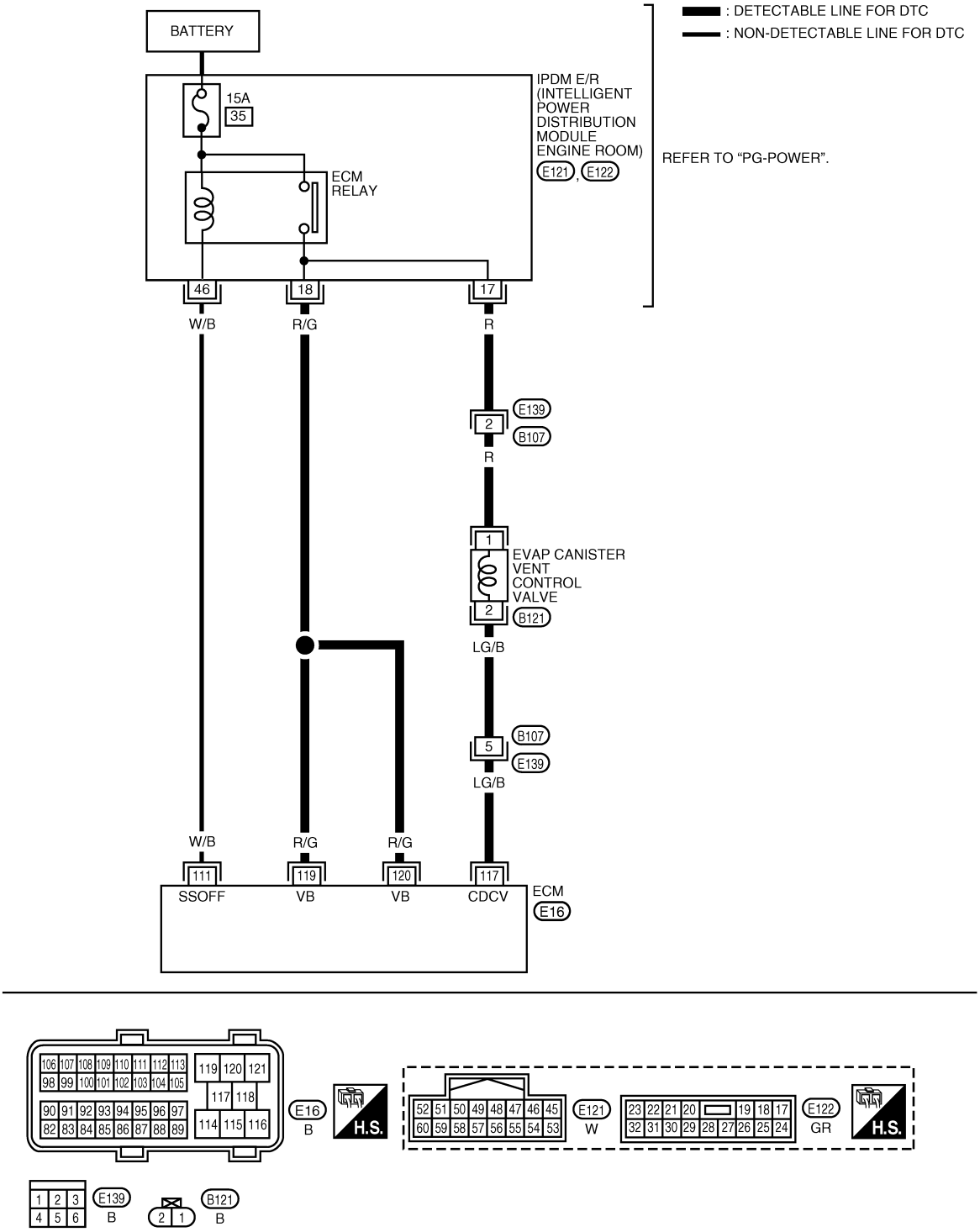

Specification data are reference values and are measured between each terminal and ground.

CAUTION:

Do not use ECM ground terminals when measuring input/output voltage. Doing so may result in damage to the ECM's transistor. Use a ground other than ECM terminals, such as the ground.

TERMINAL NO.	WIRE COLOR	ITEM	CONDITION	DATA (DC Voltage)
111	W/B	ECM relay (Self shut-off)	**[Engine is running]** **[Ignition switch: OFF]** • For a few seconds after turning ignition switch OFF	0 - 1.5V
			[Ignition switch: OFF] • More than a few seconds after turning ignition switch OFF	BATTERY VOLTAGE (11 - 14V)
117	LG/B	EVAP canister vent control valve	**[Ignition switch: ON]**	BATTERY VOLTAGE (11 - 14V)
119 120	R/G R/G	Power supply for ECM	**[Ignition switch: ON]**	BATTERY VOLTAGE (11 - 14V)

Diagnosis Procedure

INFOID:0000000001717487

1. CHECK RUBBER TUBE

1. Turn ignition switch OFF.
2. Disconnect rubber tube connected to EVAP canister vent control valve.

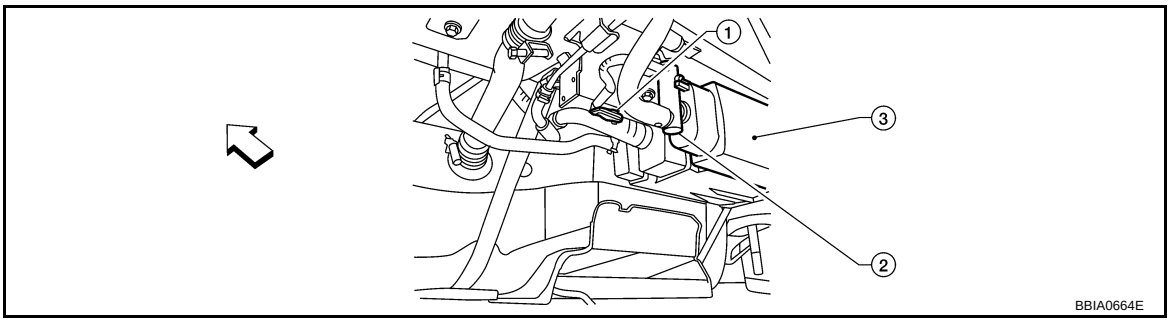

⇦: Vehicle front

1. EVAP control system pressure sensor 2. EVAP canister vent control valve 3. EVAP canister

3. Check the rubber tube for clogging.

OK or NG

OK >> GO TO 2.
NG >> Clean rubber tube using an air blower.

2. CHECK EVAP CANISTER VENT CONTROL VALVE

Refer to EC-394, "Component Inspection".

OK or NG

OK >> GO TO 3.
NG >> Replace EVAP canister vent control valve.

3. CHECK IF EVAP CANISTER SATURATED WITH WATER

1. Remove EVAP canister with EVAP canister vent control valve and EVAP control system pressure sensor attached.

2. Does water drain from the EVAP canister?.

Yes or No

Yes >> GO TO 4.
No >> GO TO 6.

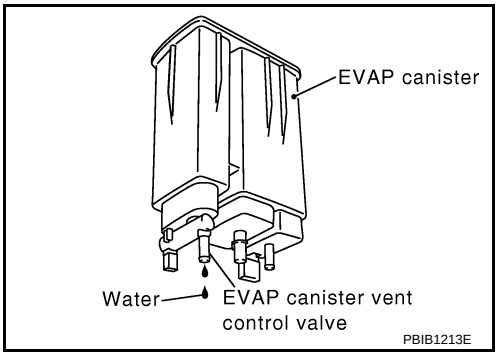

4. CHECK EVAP CANISTER

Weigh the EVAP canister with the EVAP canister vent control valve and EVAP control system pressure sensor attached.

The weight should be less than 2.1 kg (4.6 lb).

OK or NG

OK >> GO TO 6.
NG >> GO TO 5.

5. DETECT MALFUNCTIONING PART

Check the following.

- EVAP canister for damage
- EVAP hose between EVAP canister and vehicle frame for clogging or poor connection

>> Repair hose or replace EVAP canister.

6. CHECK EVAP CONTROL SYSTEM PRESSURE SENSOR CONNECTOR

1. Disconnect EVAP control system pressure sensor harness connector.
2. Check connectors for water.

Water should not exist.

OK or NG

OK >> GO TO 7.
NG >> Replace EVAP control system pressure sensor.

7. CHECK EVAP CONTROL SYSTEM PRESSURE SENSOR

Refer to EC-404, "Component Inspection".

OK or NG

OK >> GO TO 8.
NG >> Replace EVAP control system pressure sensor.

8. CHECK INTERMITTENT INCIDENT

Refer to EC-130.

>> **INSPECTION END**

Component Inspection

INFOID:0000000001717488

EVAP CANISTER VENT CONTROL VALVE

With CONSULT-III

1. Remove EVAP canister vent control valve from EVAP canister.

2. Check portion **B** of EVAP canister vent control valve for being rusted.
   If NG, replace EVAP canister vent control valve.
   If OK, go to next step.
3. Reconnect harness connectors disconnected.
4. Turn ignition switch ON.
5. Perform “VENT CONTROL/V” in “ACTIVE TEST” mode.
6. Check air passage continuity and operation delay time.
   Make sure new O-ring is installed properly.

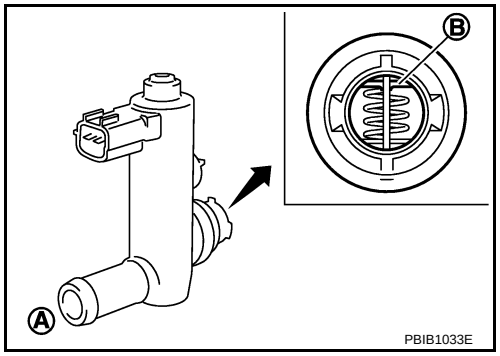

Condition VENT CONTROL/V	Air passage continuity between A and B
ON	No
OFF	Yes

Operation takes less than 1 second.
If NG, replace EVAP canister vent control valve.
If OK, go to next step.

7. Clean the air passage (Portion **A** to **B**) of EVAP canister vent control valve using an air blower.
8. Perform step 6 again.

Without CONSULT-III

1. Remove EVAP canister vent control valve from EVAP canister.
2. Check portion **B** of EVAP canister vent control valve for being rusted.

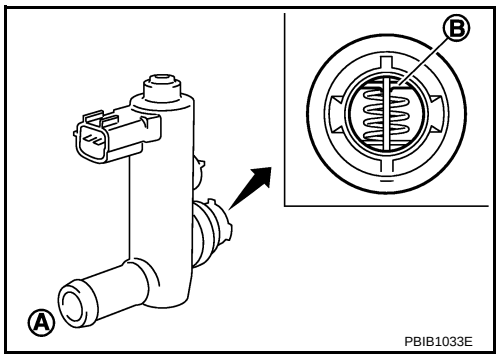

3. Check air passage continuity and operation delay time under the following conditions.
   Make sure new O-ring is installed properly.

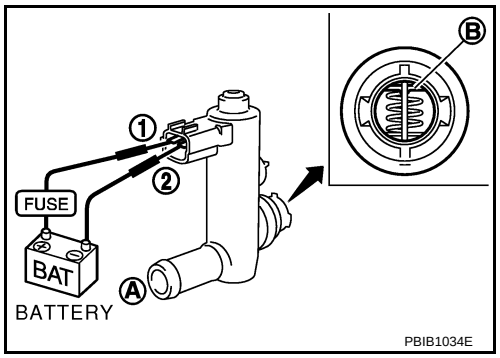

Condition	Air passage continuity between A and B
12V direct current supply between terminals 1 and 2	No
OFF	Yes

Operation takes less than 1 second.
If NG, replace EVAP canister vent control valve.
If OK, go to next step.

4. Clean the air passage (Portion **A** to **B**) of EVAP canister vent control valve using an air blower.
5. Perform step 3 again.

DTC P0451 EVAP CONTROL SYSTEM PRESSURE SENSOR

Component Description

INFOID:0000000001717489

The EVAP control system pressure sensor detects pressure in the purge line. The sensor output voltage to the ECM increases as pressure increases.

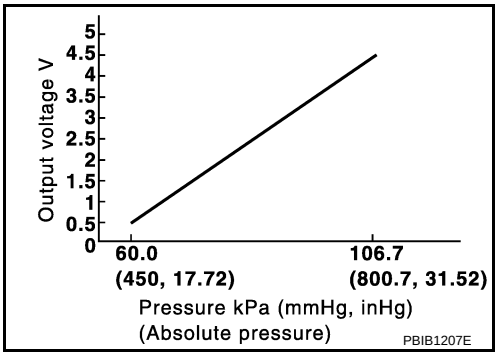

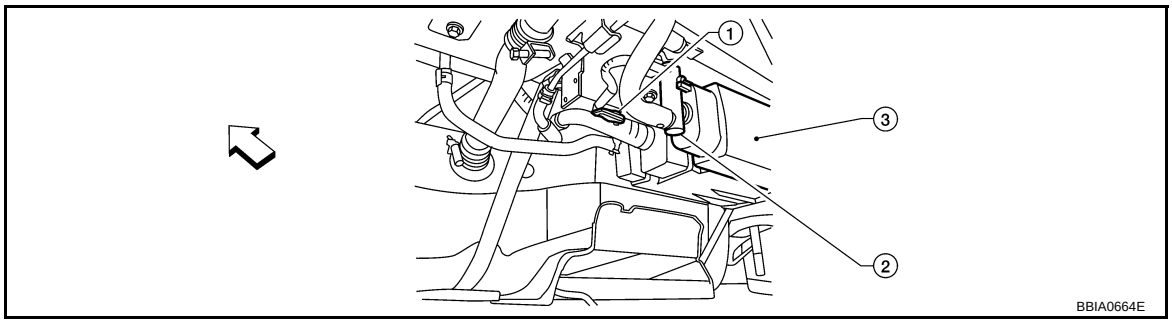

⇦: Vehicle front

1. EVAP control system pressure sensor 2. EVAP canister vent control valve 3. EVAP canister

CONSULT-III Reference Value in Data Monitor Mode

INFOID:0000000001717490

Specification data are reference values.

MONITOR ITEM	CONDITION	SPECIFICATION
EVAP SYS PRES	• Ignition switch: ON	Approx. 1.8 - 4.8V

On Board Diagnosis Logic

INFOID:0000000001717491

NOTE:
If DTC P0451 is displayed with DTC P0643, first perform the trouble diagnosis for DTC P0643. Refer to EC-449.

DTC No.	Trouble diagnosis name	DTC detecting condition	Possible cause
P0451 0451	EVAP control system pressure sensor performance	ECM detects a sloshing signal from the EVAP control system pressure sensor	• Harness or connectors • EVAP control system pressure sensor

DTC Confirmation Procedure

INFOID:0000000001717492

1. If DTC Confirmation Procedure has been previously conducted, always perform the following before conducting the next step.

a. Turn ignition switch OFF and wait at least 10 seconds.
b. Turn ignition switch ON.
c. Turn ignition switch OFF and wait at least 10 seconds.

2. Start engine and wait at least 40 seconds.

NOTE:
Do not depress accelerator pedal even slightly.

3. Check 1st trip DTC.
4. If 1st trip DTC is detected, go to EC-397, "Diagnosis Procedure".

Diagnosis Procedure

INFOID:0000000001717493

1. CHECK GROUND CONNECTIONS

1. Turn ignition switch OFF.
2. Loosen and retighten three ground screws on the body. Refer to EC-138, "Ground Inspection".

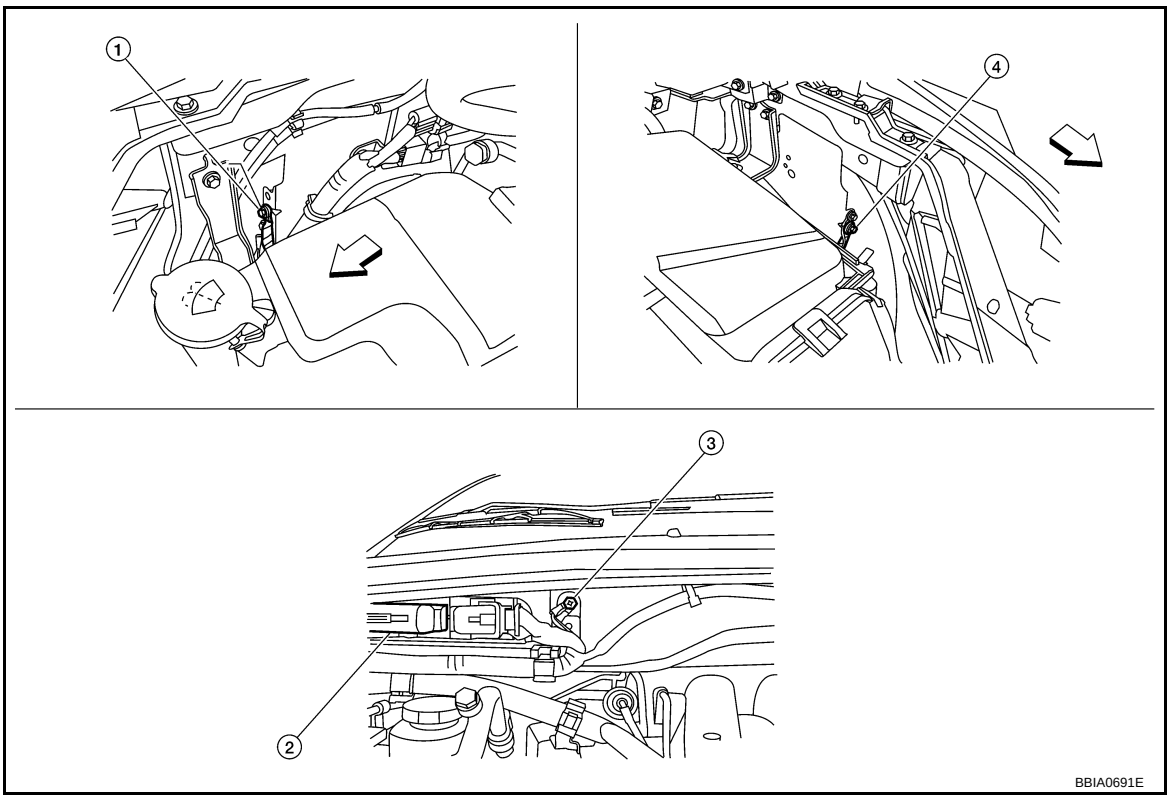

⇦ Vehicle front

1. Body ground E24
2. ECM
3. Body ground E9
4. Body ground E15

OK or NG

OK >> GO TO 2.
NG >> Repair or replace ground connections.

2. CHECK EVPA CONTROL SYSTEM PRESSURE SENSOR CONNECTOR FOR WATER

1. Disconnect EVAP control system pressure sensor harness connector.

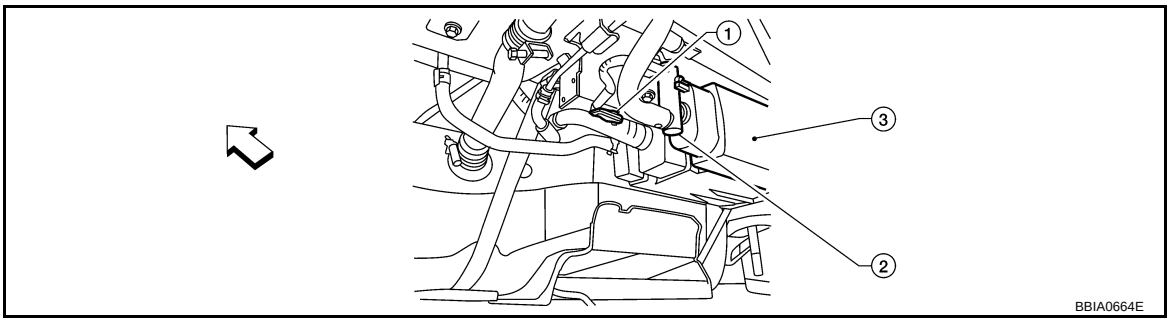

⇦: Vehicle front

1. EVAP control system pressure sensor 2. EVAP canister vent control valve 3. EVAP canister

2. Check sensor harness connector for water.

Water should not exist.

OK or NG

OK >> GO TO 3.
NG >> Repair or replace harness connector.

3. CHECK EVAP CONTROL SYSTEM PRESSURE SENSOR

Refer to EC-398, "Component Inspection".

OK or NG

OK >> GO TO 4.
NG >> Replace EVAP control system pressure sensor.

4. CHECK INTERMITTENT INCIDENT

Refer to EC-130.
For Wiring Diagram, refer to EC-401.

>> **INSPECTION END**

Component Inspection

INFOID:0000000001717494

EVAP CONTROL SYSTEM PRESSURE SENSOR

1. Remove EVAP control system pressure sensor with its harness connector connected from EVAP canister. **Always replace O-ring with a new one.**
2. Install a vacuum pump to EVAP control system pressure sensor.
3. Turn ignition switch ON and check output voltage between ECM terminal 32 and ground under the following conditions.

Applied vacuum kPa (mmHg, inHg)	Voltage V
Not applied	1.8 - 4.8
-26.7 (-200, -7.87)	2.1 to 2.5V lower than above value

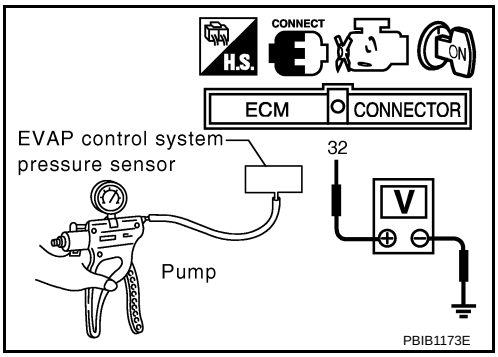

CAUTION:
- **Always calibrate the vacuum pump gauge when using it.**
- **Do not apply below -93.3 kPa (-700 mmHg, -27.56 inHg) or pressure over 101.3 kPa (760 mmHg, 29.92 inHg).**

4. If NG, replace EVAP control system pressure sensor.

DTC P0452 EVAP CONTROL SYSTEM PRESSURE SENSOR

Component Description

INFOID:0000000001717495

The EVAP control system pressure sensor detects pressure in the purge line. The sensor output voltage to the ECM increases as pressure increases.

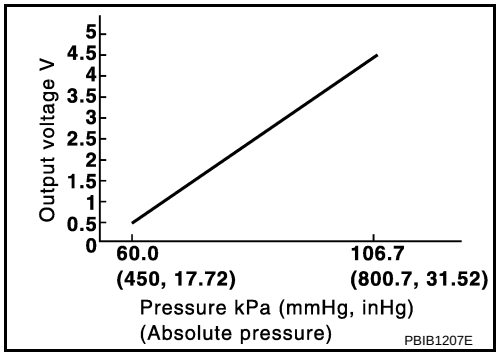

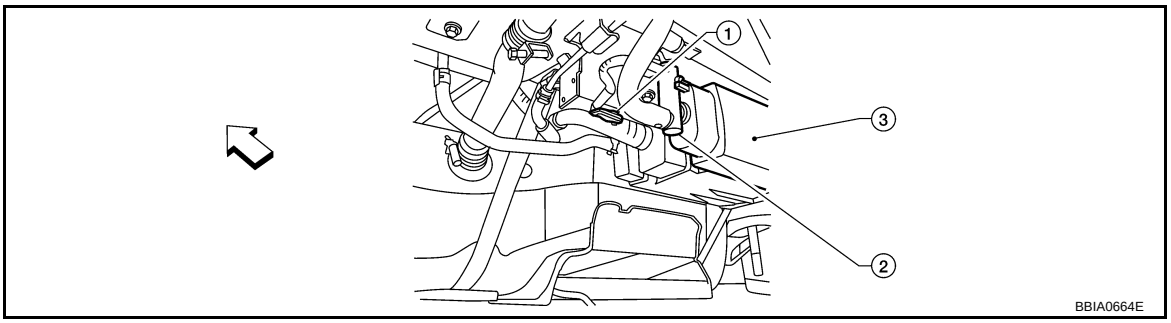

⇦: Vehicle front

1. EVAP control system pressure sensor 2. EVAP canister vent control valve 3. EVAP canister

CONSULT-III Reference Value in Data Monitor Mode

INFOID:0000000001717496

Specification data are reference values.

MONITOR ITEM	CONDITION	SPECIFICATION
EVAP SYS PRES	• Ignition switch: ON	Approx. 1.8 - 4.8V

On Board Diagnosis Logic

INFOID:0000000001717497

NOTE:
If DTC P0452 is displayed with DTC P0643, first perform the trouble diagnosis for DTC P0643. Refer to EC-449.

DTC No.	Trouble diagnosis name	DTC detecting condition	Possible cause
P0452 0452	EVAP control system pressure sensor low input	An excessively low voltage from the sensor is sent to ECM.	• Harness or connectors (The sensor circuit is open or shorted.) • EVAP control system pressure sensor

DTC Confirmation Procedure

INFOID:0000000001717498

NOTE:
If DTC Confirmation Procedure has been previously conducted, always perform the following before conducting the next step.
1. Turn ignition switch OFF and wait at least 10 seconds.
2. Turn ignition switch ON.
3. Turn ignition switch OFF and wait at least 10 seconds.

TESTING CONDITION:
Always perform test at a temperature of 5°C (41°F) or more.

WITH CONSULT-III

1. Start engine and warm it up to normal operating temperature.
2. Turn ignition switch OFF and wait at least 10 seconds.
3. Turn ignition switch ON.
4. Turn ignition switch OFF and wait at least 10 seconds.
5. Turn ignition switch ON.
6. Select “DATA MONITOR” mode with CONSULT-III.
7. Make sure that “FUEL T/TMP SE” is more than 0°C (32°F).
8. Start engine and wait at least 20 seconds.
9. Check 1st trip DTC.
10. If 1st trip DTC is detected, go to EC-402, "Diagnosis Procedure".

WITH GST

1. Start engine and warm it up to normal operating temperature.
2. Check that voltage between ECM terminal 107 (Fuel tank temperature sensor signal) and ground is less than 4.2V.
3. Turn ignition switch OFF and wait at least 10 seconds.
4. Turn ignition switch ON.
5. Turn ignition switch OFF and wait at least 10 seconds.
6. Start engine and wait at least 20 seconds.
7. Select Service $07 with GST.
8. Check 1st trip DTC.
9. If 1st trip DTC is detected, go to EC-402, "Diagnosis Procedure".

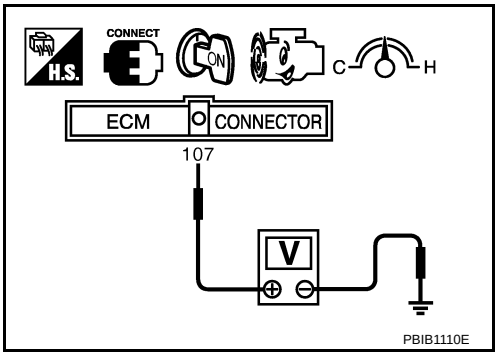

Wiring Diagram

INFOID:0000000001717499

EC-PRE/SE-01

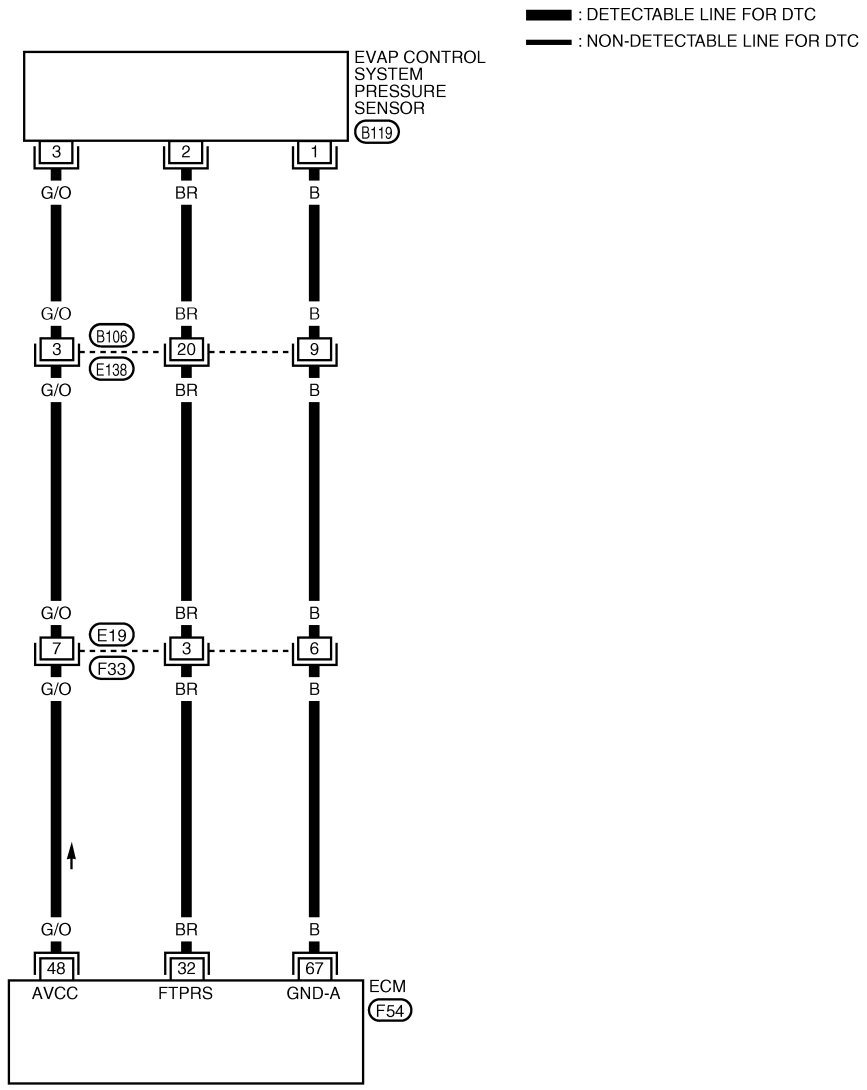

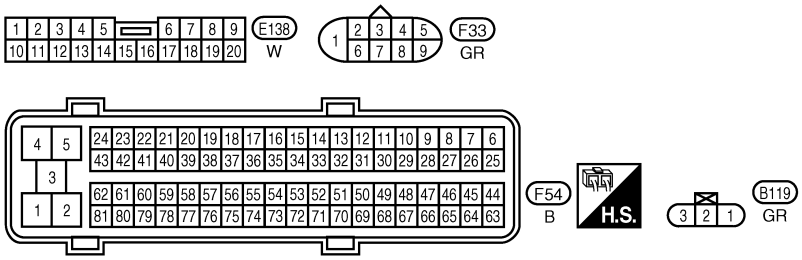

BBWA2522E

Specification data are reference values and are measured between each terminal and ground.

CAUTION:

Do not use ECM ground terminals when measuring input/output voltage. Doing so may result in damage to the ECM's transistor. Use a ground other than ECM terminals, such as the ground.

TERMINAL NO.	WIRE COLOR	ITEM	CONDITION	DATA (DC Voltage)
32	BR	EVAP control system pressure sensor	**[Ignition switch: ON]**	Approximately 1.8 - 4.8V
48	G/O	EVAP control system pressure sensor power supply	**[Ignition switch: ON]**	Approximately 5V
67	B	Sensor ground	**[Engine is running]** • **Warm-up condition** • Idle speed	Approximately 0V

Diagnosis Procedure

INFOID:0000000001717500

1. CHECK GROUND CONNECTIONS

1. Turn ignition switch OFF.
2. Loosen and retighten three ground screws on the body. Refer to EC-138, "Ground Inspection".

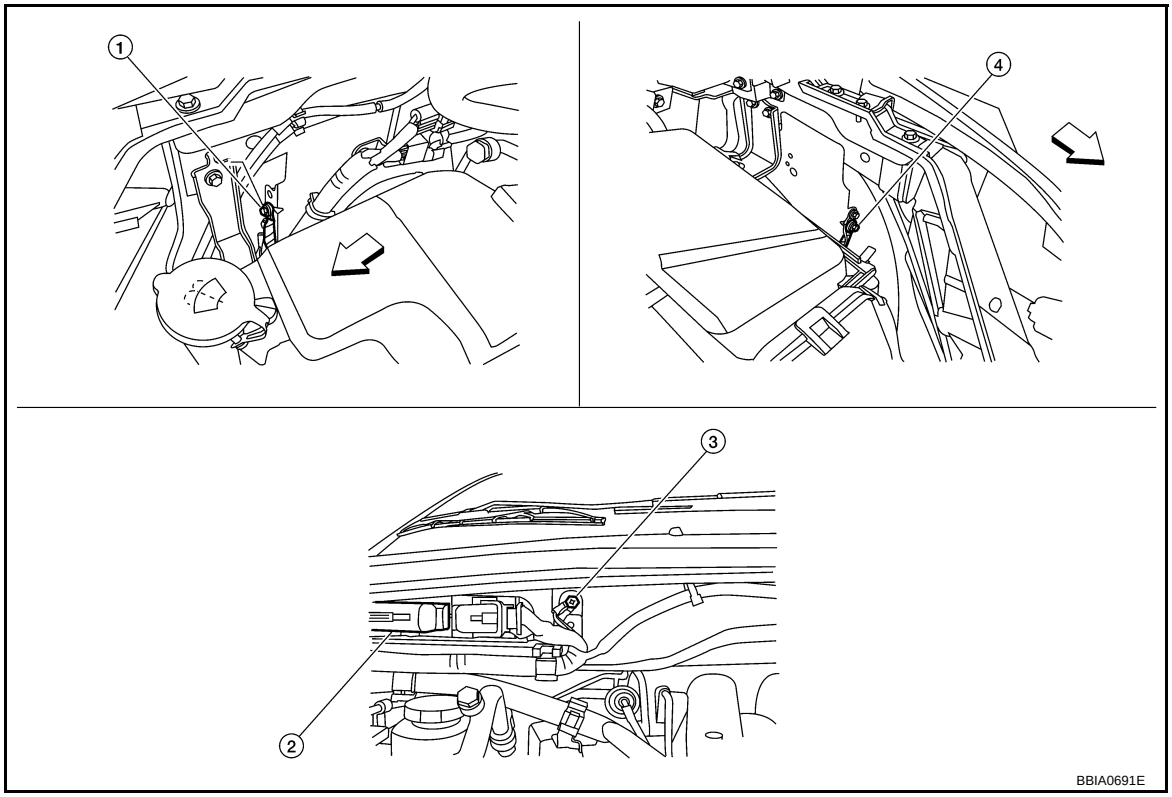

⇦: Vehicle front

1. Body ground E24
2. ECM
3. Body ground E9
4. Body ground E15

OK or NG

OK >> GO TO 2.
NG >> Repair or replace ground connections.

2. CHECK CONNECTOR

1. Disconnect EVAP control system pressure sensor harness connector.

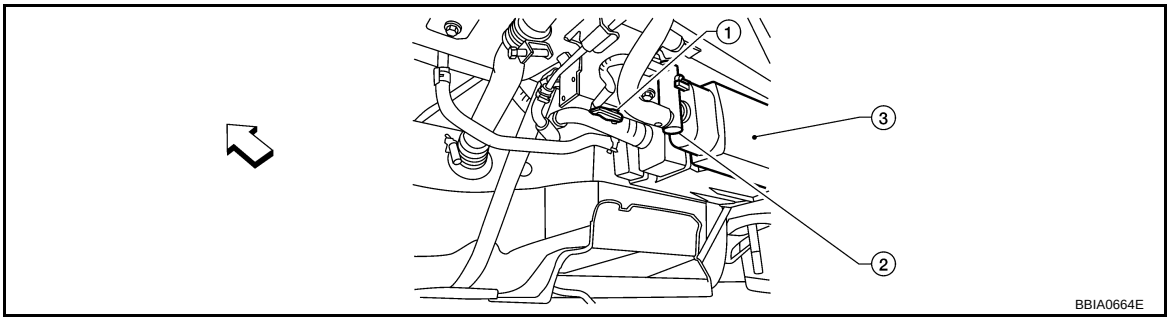

⇦: Vehicle front

1. EVAP control system pressure sensor 2. EVAP canister vent control valve 3. EVAP canister

2. Check sensor harness connector for water.

Water should not exist.

OK or NG

OK >> GO TO 3.
NG >> Repair or replace harness connector.

3. CHECK EVAP CONTROL SYSTEM PRESSURE SENSOR POWER SUPPLY CIRCUIT

1. Turn ignition switch ON.
2. Check voltage between EVAP control system pressure sensor terminal 3 and ground with CONSULT-III or tester.

Voltage: Approximately 5V

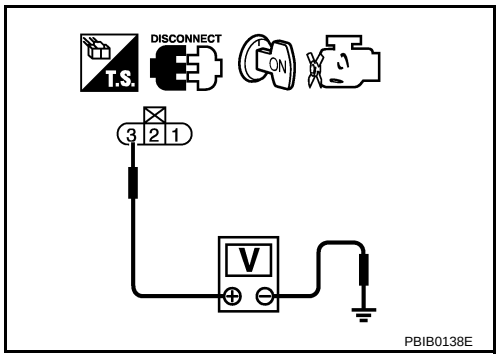

OK or NG

OK >> GO TO 5.
NG >> GO TO 4.

4. DETECT MALFUNCTIONING PART

Check the following.
- Harness connectors E19, F33
- Harness connectors B106, E138
- Harness for open or short between EVAP control system pressure sensor and ECM

>> Repair open circuit or short to ground or short to power in harness or connectors.

5. CHECK EVAP CONTROL SYSTEM PRESSURE SENSOR GROUND CIRCUIT FOR OPEN AND SHORT

1. Turn ignition switch OFF.
2. Disconnect ECM harness connector.
3. Check harness continuity between EVAP control system pressure sensor terminal 1 and ECM terminal 67. Refer to Wiring Diagram.

Continuity should exist.

4. Also check harness for short to ground and short to power.

OK or NG

OK >> GO TO 7.
NG >> GO TO 6.

6. DETECT MALFUNCTIONING PART

Check the following.

- Harness connectors E19, F33
- Harness connectors B106, E138
- Harness for open or short between EVAP control system pressure sensor and ECM

>> Repair open circuit or short to ground or short to power in harness or connectors.

7. CHECK EVAP CONTROL SYSTEM PRESSURE SENSOR INPUT SIGNAL CIRCUIT FOR OPEN AND SHORT

1. Check harness continuity between ECM terminal 32 and EVAP control system pressure sensor terminal 2. Refer to Wiring Diagram.

Continuity should exist.

2. Also check harness for short to ground and short to power.

OK or NG

OK >> GO TO 9.
NG >> GO TO 8.

8. DETECT MALFUNCTIONING PART

Check the following.
- Harness connectors E19, F33
- Harness connectors B106, E138
- Harness for open or short between EVAP control system pressure sensor and ECM

>> Repair open circuit or short to ground or short to power in harness or connectors.

9. CHECK EVAP CONTROL SYSTEM PRESSURE SENSOR

Refer to EC-404, "Component Inspection".

OK or NG

OK >> GO TO 10.
NG >> Replace EVAP control system pressure sensor.

10. CHECK INTERMITTENT INCIDENT

Refer to EC-130.

>> **INSPECTION END**

Component Inspection

INFOID:0000000001717501

EVAP CONTROL SYSTEM PRESSURE SENSOR

1. Remove EVAP control system pressure sensor with its harness connector connected from EVAP canister. **Always replace O-ring with a new one.**
2. Install a vacuum pump to EVAP control system pressure sensor.
3. Turn ignition switch ON and check output voltage between ECM terminal 32 and ground under the following conditions.

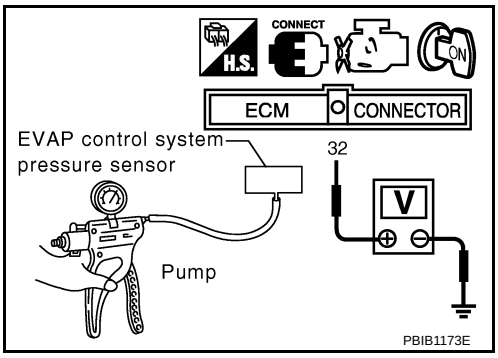

Applied vacuum kPa (mmHg, inHg)	Voltage V
Not applied	1.8 - 4.8
-26.7 (-200, -7.87)	2.1 to 2.5V lower than above value

CAUTION:
- **Always calibrate the vacuum pump gauge when using it.**
- **Do not apply below -93.3 kPa (-700 mmHg, -27.56 inHg) or pressure over 101.3 kPa (760 mmHg, 29.92 inHg).**

4. If NG, replace EVAP control system pressure sensor.

DTC P0453 EVAP CONTROL SYSTEM PRESSURE SENSOR

Component Description

INFOID:0000000001717502

The EVAP control system pressure sensor detects pressure in the purge line. The sensor output voltage to the ECM increases as pressure increases.

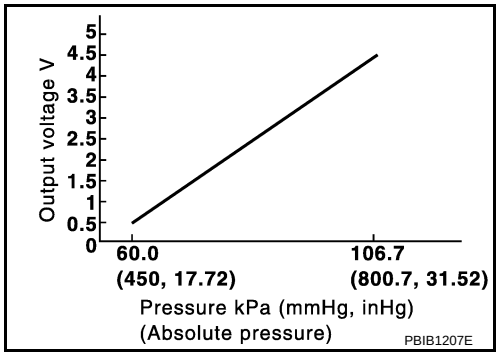

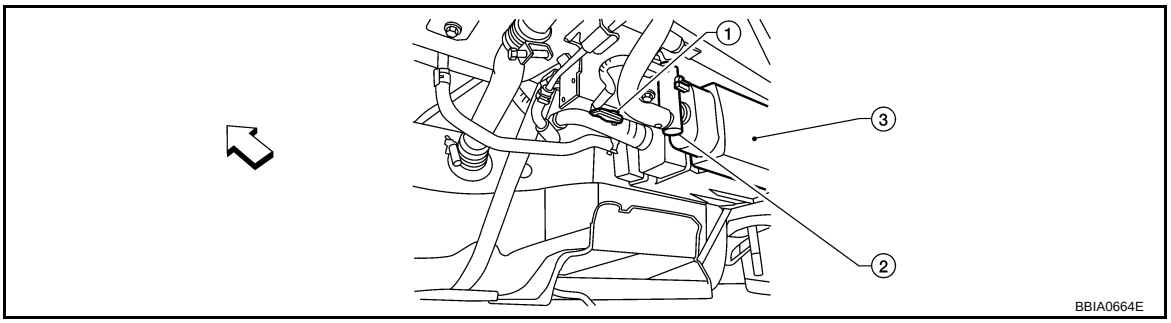

⇦: Vehicle front

1. EVAP control system pressure sensor 2. EVAP canister vent control valve 3. EVAP canister

CONSULT-III Reference Value in Data Monitor Mode

INFOID:0000000001717503

Specification data are reference values.

MONITOR ITEM	CONDITION	SPECIFICATION
EVAP SYS PRES	• Ignition switch: ON	Approx. 1.8 - 4.8V

On Board Diagnosis Logic

INFOID:0000000001717504

NOTE:
If DTC P0453 is displayed with DTC P0643, first perform the trouble diagnosis for DTC P0643. Refer to EC-449.

DTC No.	Trouble diagnosis name	DTC detecting condition	Possible cause
P0453 0453	EVAP control system pressure sensor high input	An excessively high voltage from the sensor is sent to ECM.	• Harness or connectors (The sensor circuit is open or shorted.) • EVAP control system pressure sensor • EVAP canister vent control valve • EVAP canister • Rubber hose from EVAP canister vent control valve to vehicle frame

DTC Confirmation Procedure

INFOID:0000000001717505

NOTE:
If DTC Confirmation Procedure has been previously conducted, always perform the following before conducting the next step.

1. Turn ignition switch OFF and wait at least 10 seconds.

2. Turn ignition switch ON.
3. Turn ignition switch OFF and wait at least 10 seconds.

TESTING CONDITION:
Always perform test at a temperature of 5°C (41°F) or more.

With CONSULT-III

1. Start engine and warm it up to normal operating temperature.
2. Turn ignition switch OFF and wait at least 10 seconds.
3. Turn ignition switch ON.
4. Turn ignition switch OFF and wait at least 10 seconds.
5. Turn ignition switch ON.
6. Select “DATA MONITOR” mode with CONSULT-III.
7. Make sure that “FUEL T/TMP SE” is more than 0°C (32°F).
8. Start engine and wait at least 10 seconds.
9. Check 1st trip DTC.
10. If 1st trip DTC is detected, go to EC-408, "Diagnosis Procedure".

With GST

1. Start engine and warm it up to normal operating temperature.
2. Check that voltage between ECM terminal 107 (Fuel tank temperature sensor signal) and ground is less than 4.2V.
3. Turn ignition switch OFF and wait at least 10 seconds.
4. Turn ignition switch ON.
5. Turn ignition switch OFF and wait at least 10 seconds.
6. Start engine wait at least 10 seconds.
7. Select Service $07 with GST.
8. Check 1st trip DTC.
9. If 1st trip DTC is detected, go to EC-408, "Diagnosis Procedure".

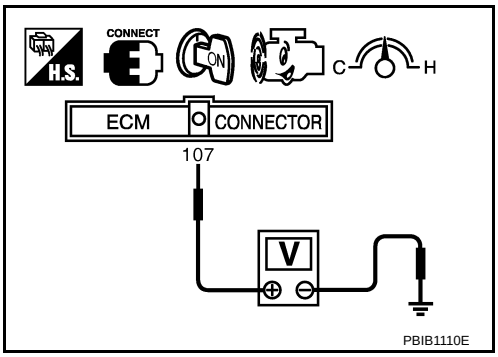

Wiring Diagram

INFOID:0000000001717506

EC-PRE/SE-01

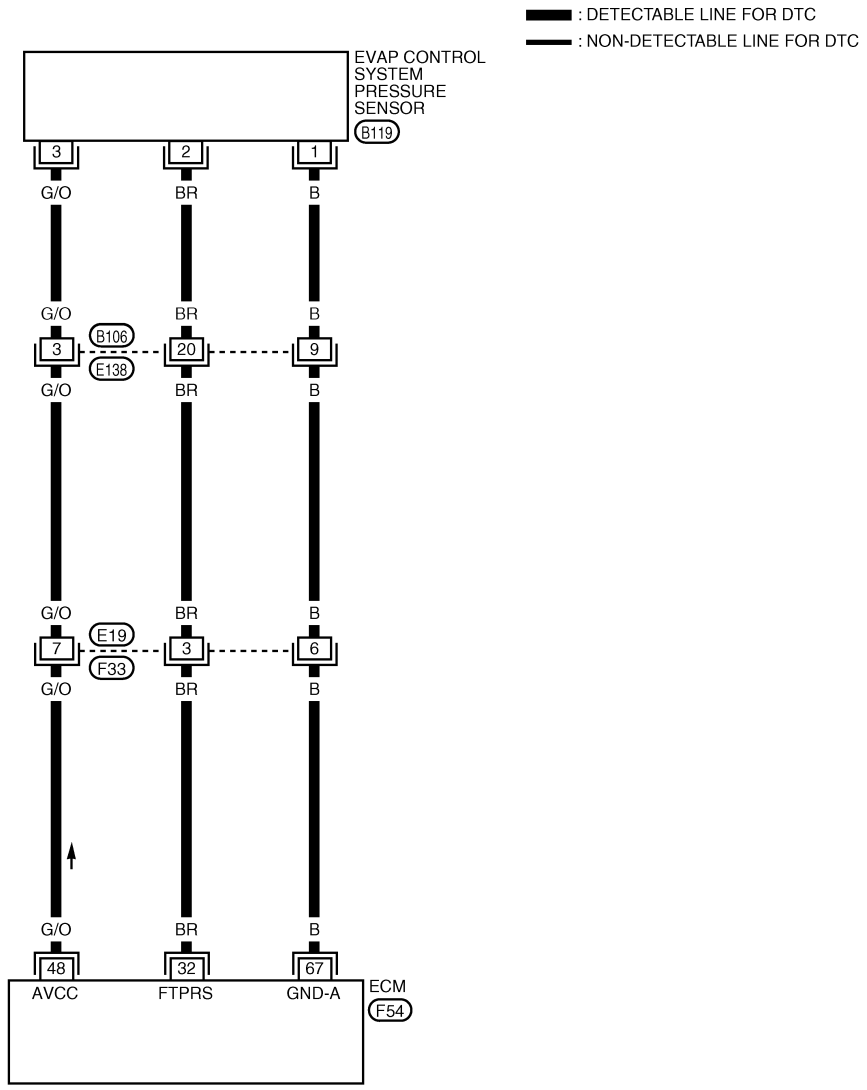

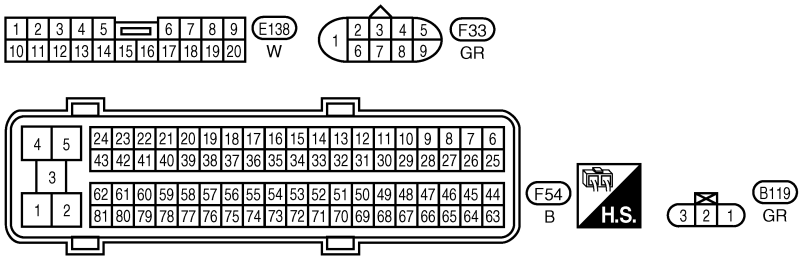

BBWA2522E

Specification data are reference values and are measured between each terminal and ground.

CAUTION:

Do not use ECM ground terminals when measuring input/output voltage. Doing so may result in damage to the ECM's transistor. Use a ground other than ECM terminals, such as the ground.

TERMINAL NO.	WIRE COLOR	ITEM	CONDITION	DATA (DC Voltage)
32	BR	EVAP control system pressure sensor	**[Ignition switch: ON]**	Approximately 1.8 - 4.8V
48	G/O	EVAP control system pressure sensor power supply	**[Ignition switch: ON]**	Approximately 5V
67	B	Sensor ground	**[Engine is running]** • **Warm-up condition** • Idle speed	Approximately 0V

Diagnosis Procedure

INFOID:0000000001717507

1. CHECK GROUND CONNECTIONS

1. Turn ignition switch OFF.
2. Loosen and retighten three ground screws on the body. Refer to EC-138, "Ground Inspection".

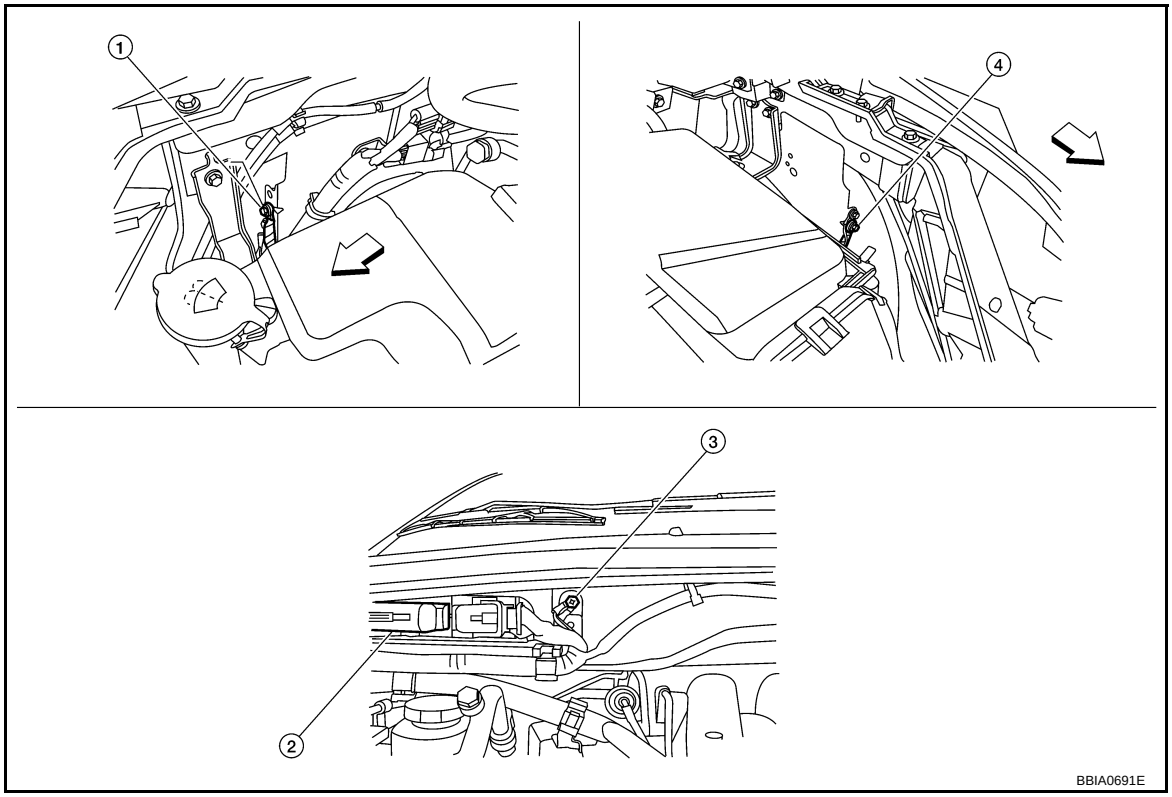

⇦: Vehicle front

1. Body ground E24
2. ECM
3. Body ground E9
4. Body ground E15

OK or NG

OK >> GO TO 2.
NG >> Repair or replace ground connections.

2. CHECK CONNECTOR

1. Disconnect EVAP control system pressure sensor harness connector.

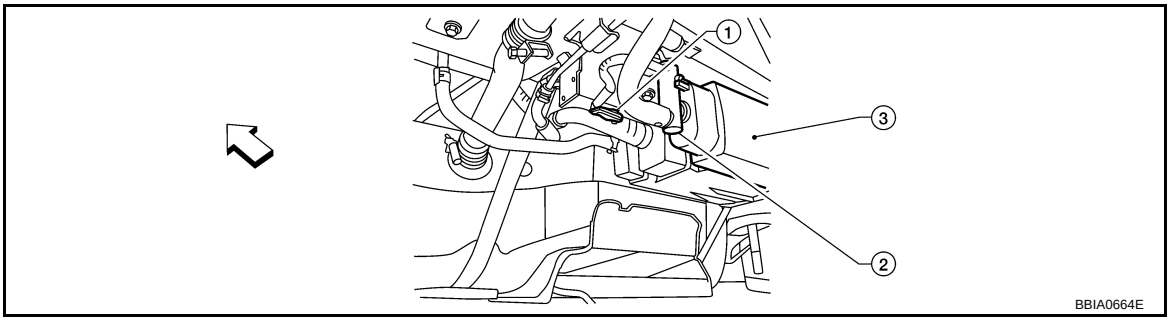

⇦: Vehicle front

1. EVAP control system pressure sensor 2. EVAP canister vent control valve 3. EVAP canister

2. Check sensor harness connector for water.

Water should not exist.

OK or NG

OK >> GO TO 3.
NG >> Repair or replace harness connector.

3. CHECK EVAP CONTROL SYSTEM PRESSURE SENSOR POWER SUPPLY CIRCUIT

1. Turn ignition switch ON.
2. Check voltage between EVAP control system pressure sensor terminal 3 and ground with CONSULT-III or tester.

Voltage: Approximately 5V

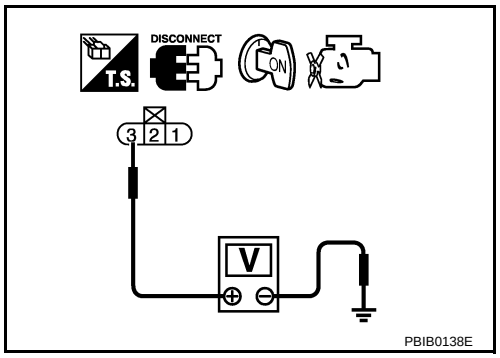

OK or NG

OK >> GO TO 5.
NG >> GO TO 4.

4. DETECT MALFUNCTIONING PART

Check the following.
- Harness connectors B106, E138
- Harness connectors E19, F33
- Harness for open or short between EVAP control system pressure sensor and ECM

>> Repair open circuit or short to ground or short to power in harness or connectors.

5. CHECK EVAP CONTROL SYSTEM PRESSURE SENSOR GROUND CIRCUIT FOR OPEN AND SHORT

1. Turn ignition switch OFF.
2. Disconnect ECM harness connector.
3. Check harness continuity between EVAP control system pressure sensor terminal 1 and ECM terminal 67. Refer to Wiring Diagram.

Continuity should exist.

4. Also check harness for short to ground and short to power.

OK or NG

OK >> GO TO 7.
NG >> GO TO 6.

6. DETECT MALFUNCTIONING PART

Check the following.

- Harness connectors E19, F33
- Harness connectors B106, E138
- Harness for open or short between EVAP control system pressure sensor and ECM

>> Repair open circuit or short to ground or short to power in harness or connectors.

7. CHECK EVAP CONTROL SYSTEM PRESSURE SENSOR INPUT SIGNAL CIRCUIT FOR OPEN AND SHORT

1. Check harness continuity between ECM terminal 32 and EVAP control system pressure sensor terminal 2. Refer to Wiring Diagram.

Continuity should exist.

2. Also check harness for short to ground and short to power.

OK or NG

OK >> GO TO 9.
NG >> GO TO 8.

8. DETECT MALFUNCTIONING PART

Check the following.
- Harness connectors E19, F33
- Harness connectors B106, E138
- Harness for open or short between EVAP control system pressure sensor and ECM

>> Repair open circuit or short to ground or short to power in harness or connectors.

9. CHECK RUBBER TUBE

1. Disconnect rubber tube connected to EVAP canister vent control valve.
2. Check the rubber tube for clogging, vent and kinked.

OK or NG

OK >> GO TO 10.
NG >> Clean the rubber tube using an air blower, repair or replace rubber tube.

10. CHECK EVAP CANISTER VENT CONTROL VALVE

Refer to EC-389, "Component Inspection".

OK or NG

OK >> GO TO 11.
NG >> Replace EVAP canister vent control valve.

11. CHECK EVAP CONTROL SYSTEM PRESSURE SENSOR

Refer to EC-411, "Component Inspection".

OK or NG

OK >> GO TO 12.
NG >> Replace EVAP control system pressure sensor.

12. CHECK IF EVAP CANISTER SATURATED WITH WATER

1. Remove EVAP canister with EVAP canister vent control valve and EVAP control system pressure sensor attached.

2. Does water drain from the EVAP canister?.

Yes or No

Yes >> GO TO 13.
No >> GO TO 15.

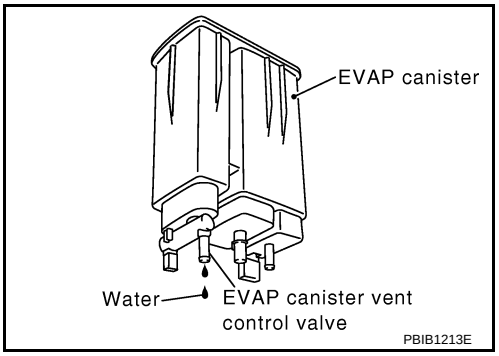

13. CHECK EVAP CANISTER

Weigh the EVAP canister with the EVAP canister vent control valve and EVAP control system pressure sensor attached.

The weight should be less than 2.1 kg (4.6 lb).

OK or NG

OK >> GO TO 15.
NG >> GO TO 14.

14. DETECT MALFUNCTIONING PART

Check the following.
- EVAP canister for damage
- EVAP hose between EVAP canister and vehicle frame for clogging or poor connection

>> Repair hose or replace EVAP canister.

15. CHECK INTERMITTENT INCIDENT

Refer to EC-130.

>> **INSPECTION END**

Component Inspection

INFOID:0000000001717508

EVAP CONTROL SYSTEM PRESSURE SENSOR

1. Remove EVAP control system pressure sensor with its harness connector connected from EVAP canister. **Always replace O-ring, replace it with a new one.**
2. Install a vacuum pump to EVAP control system pressure sensor.
3. Turn ignition switch ON and check output voltage between ECM terminal 32 and ground under the following conditions.

Applied vacuum kPa (mmHg, inHg)	Voltage V
Not applied	1.8 - 4.8
-26.7 (-200, -7.87)	2.1 to 2.5V lower than above value

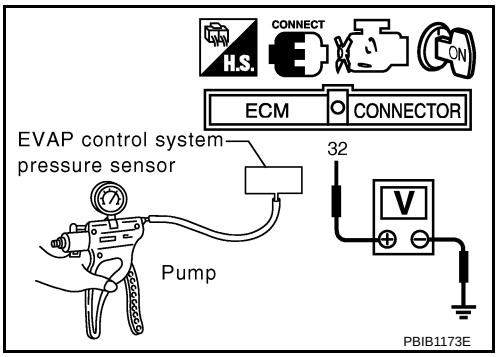

CAUTION:
- **Always calibrate the vacuum pump gauge when using it.**
- **Do not apply below -93.3 kPa (-700 mmHg, -27.56 inHg) or pressure over 101.3 kPa (760 mmHg, 29.92 inHg).**

4. If NG, replace EVAP control system pressure sensor.

DTC P0455 EVAP CONTROL SYSTEM

On Board Diagnosis Logic

INFOID:0000000001717509

This diagnosis detects a very large leak (fuel filler cap fell off etc.) in EVAP system between the fuel tank and EVAP canister purge volume control solenoid valve.

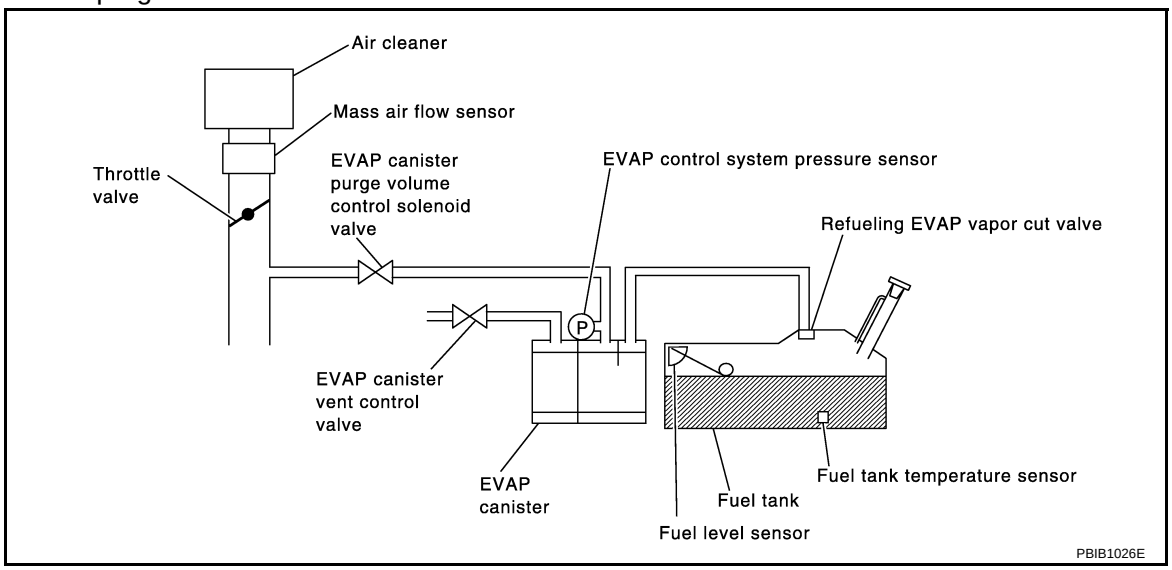

DTC No.	Trouble diagnosis name	DTC detecting condition	Possible cause
P0455 0455	EVAP control system gross leak detected	EVAP control system has a very large leak such as fuel filler cap fell off, EVAP control system does not operate properly.	• Fuel filler cap remains open or fails to close. • Incorrect fuel tank vacuum relief valve • Incorrect fuel filler cap used • Foreign matter caught in fuel filler cap. • Leak is in line between intake manifold and EVAP canister purge volume control solenoid valve. • Foreign matter caught in EVAP canister vent control valve. • EVAP canister or fuel tank leaks • EVAP purge line (pipe and rubber tube) leaks • EVAP purge line rubber tube bent. • Loose or disconnected rubber tube • EVAP canister vent control valve and the circuit • EVAP canister purge volume control solenoid valve and the circuit • Fuel tank temperature sensor • O-ring of EVAP canister vent control valve is missing or damaged. • EVAP control system pressure sensor • Refueling EVAP vapor cut valve • ORVR system leaks

CAUTION:
- **Use only a genuine NISSAN fuel filler cap as a replacement. If an incorrect fuel filler cap is used, the MIL may come on.**
- **If the fuel filler cap is not tightened properly, the MIL may come on.**
- **Use only a genuine NISSAN rubber tube as a replacement.**

DTC Confirmation Procedure

INFOID:0000000001717510

CAUTION:
Never remove fuel filler cap during the DTC Confirmation Procedure.
NOTE:

- **Make sure that EVAP hoses are connected to EVAP canister purge volume control solenoid valve properly.**
- If DTC Confirmation Procedure has been previously conducted, always perform the following before conducting the next step.

1. Turn ignition switch OFF and wait at least 10 seconds.
2. Turn ignition switch ON.
3. Turn ignition switch OFF and wait at least 10 seconds.

TESTING CONDITION:

- **Perform “DTC WORK SUPPORT” when the fuel level is between 1/4 and 3/4 full, and vehicle is placed on flat level surface.**
- **Open engine hood before conducting the following procedures.**

WITH CONSULT-III

1. Tighten fuel filler cap securely until ratcheting sound is heard.
2. Turn ignition switch ON.
3. Turn ignition switch OFF and wait at least 10 seconds.
4. Turn ignition switch ON and select “DATA MONITOR” mode with CONSULT-III.
5. Make sure that the following conditions are met.
   COOLAN TEMP/S: 0 - 70°C (32 - 158°F)
   INT/A TEMP SE: 0 - 60°C (32 - 140°F)
6. Select “EVAP SML LEAK P0442/P1442” of “EVAPORATIVE SYSTEM” in “DTC WORK SUPPORT” mode with CONSULT-III.
   Follow the instruction displayed.
   NOTE:
   If the engine speed cannot be maintained within the range displayed on the CONSULT-III screen, go to EC-68, "Basic Inspection".
7. Make sure that “OK” is displayed.
   If “NG” is displayed, select “SELF-DIAG RESULTS” mode and make sure that “EVAP GROSS LEAK [P0455]” is displayed. If it is displayed, refer to EC-413, "Diagnosis Procedure".
   If P0442 is displayed, perform Diagnostic Procedure for DTC P0442, EC-365, "Diagnosis Procedure".

WITH GST

NOTE:
Be sure to read the explanation of Driving Pattern on EC-43, "Emission-related Diagnostic Information" before driving vehicle.

1. Start engine.
2. Drive vehicle according to Driving Pattern, EC-43, "Emission-related Diagnostic Information".
3. Stop vehicle.
4. Turn ignition switch OFF, wait at least 10 seconds and then turn ON.
5. Select Service $07 with GST.
   - If P0441 is displayed on the screen, go to EC-361, "Diagnosis Procedure".
   - If P0442 is displayed on the screen, go to EC-365, "Diagnosis Procedure".
   - If P0455 is displayed on the screen, go to EC-413, "Diagnosis Procedure".

Diagnosis Procedure

INFOID:0000000001717511

1. CHECK FUEL FILLER CAP DESIGN

1. Turn ignition switch OFF.

2. Check for genuine NISSAN fuel filler cap design.

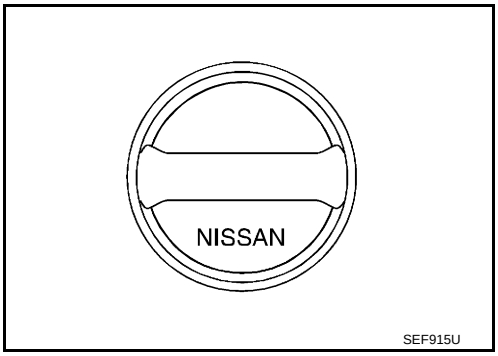

OK or NG

OK >> GO TO 2.
NG >> Replace with genuine NISSAN fuel filler cap.

2. CHECK FUEL FILLER CAP INSTALLATION

Check that the cap is tightened properly by rotating the cap clockwise.

OK or NG

OK >> GO TO 3.
NG >> 1. Open fuel filler cap, then clean cap and fuel filler neck threads using air blower.
2. Retighten until ratcheting sound is heard.

3. CHECK FUEL FILLER CAP FUNCTION

Check for air releasing sound while opening the fuel filler cap.

OK or NG

OK >> GO TO 5.
NG >> GO TO 4.

4. CHECK FUEL TANK VACUUM RELIEF VALVE

Refer to EC-30, "Component Inspection".

OK or NG

OK >> GO TO 5.
NG >> Replace fuel filler cap with a genuine one.

5. CHECK EVAP PURGE LINE

Check EVAP purge line (pipe, rubber tube, fuel tank and EVAP canister) for cracks, improper connection or disconnection.
Refer to EC-28, "Description".

OK or NG

OK >> GO TO 6.
NG >> Repair or reconnect the hose.

6. CLEAN EVAP PURGE LINE

Clean EVAP purge line (pipe and rubber tube) using air blower.

>> GO TO 7.

7. CHECK EVAP CANISTER VENT CONTROL VALVE

Check the following.
- EVAP canister vent control valve is installed properly.
  Refer to EC-32, "Removal and Installation".
- EVAP canister vent control valve.
  Refer to EC-389, "Component Inspection".

OK or NG

OK >> GO TO 8.
NG >> Repair or replace EVAP canister vent control valve and O-ring.

8. INSTALL THE PRESSURE PUMP

To locate the EVAP leak, install EVAP service port adapter and pressure pump to EVAP service port securely.

NOTE:

Improper installation of the EVAP service port adapter to the EVAP service port may cause leaking.

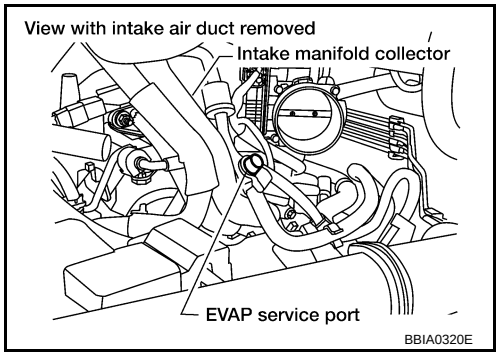

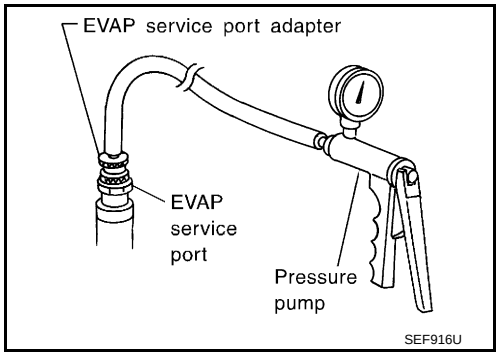

With CONSULT-III >>GO TO 9.
Without CONSULT-III>>GO TO 10.

9. CHECK FOR EVAP LEAK

With CONSULT-III

1. Turn ignition switch ON.
2. Select “EVAP SYSTEM CLOSE” of “WORK SUPPORT” mode with CONSULT-III.
3. Touch “START” and apply pressure into the EVAP line until the pressure indicator reaches the middle of the bar graph.
   CAUTION:
   - **Never use compressed air or a high pressure pump.**
   - **Do not exceed 4.12 kPa (0.042 kg/cm^2, 0.6 psi) of pressure in the system.**
4. Using EVAP leak detector, locate the EVAP leak. For the leak detector, refer to the instruction manual for more details.
   Refer to EC-28, "Description".

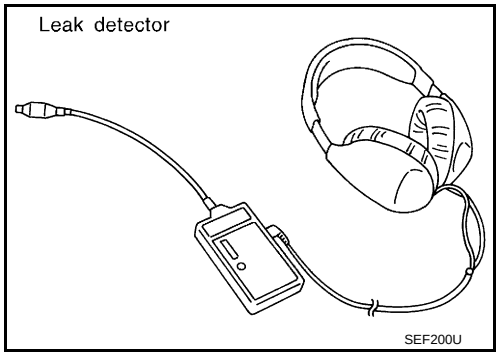

OK or NG

OK >> GO TO 11.
NG >> Repair or replace.

10. CHECK FOR EVAP LEAK

Without CONSULT-III

1. Turn ignition switch OFF.
2. Apply 12 volts DC to EVAP canister vent control valve. The valve will close. (Continue to apply 12 volts until the end of test.)

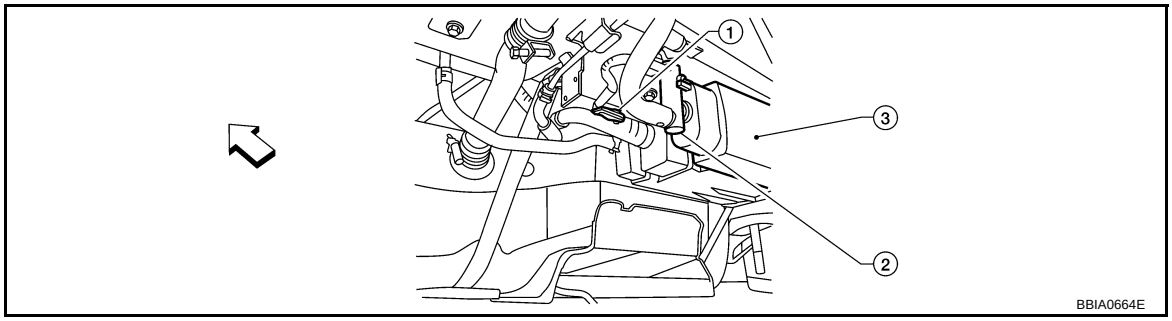

⇦: Vehicle front

1. EVAP control system pressure sensor 2. EVAP canister vent control valve 3. EVAP canister

3. Pressurize the EVAP line using pressure pump with 1.3 to 2.7 kPa (10 to 20 mmHg, 0.39 to 0.79 inHg), then remove pump and EVAP service port adapter.
   CAUTION:
   - **Never use compressed air or a high pressure pump.**
   - **Do not exceed 4.12 kPa (0.042 kg/cm^2, 0.6 psi) of pressure in the system.**
4. Using EVAP leak detector, locate the EVAP leak. For the leak detector, refer to the instruction manual for more details. Refer to EC-28, "Description".

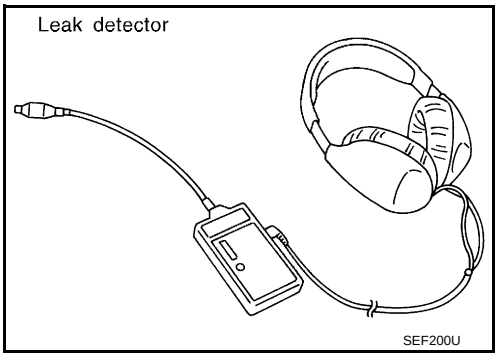

OK or NG

OK >> GO TO 12.
NG >> Repair or replace.

11. CHECK EVAP CANISTER PURGE VOLUME CONTROL SOLENOID VALVE OPERATION

With CONSULT-III

1. Disconnect vacuum hose to EVAP canister purge volume control solenoid valve at EVAP service port.
2. Start engine.
3. Perform “PURG VOL CONT/V” in “ACTIVE TEST” mode.
4. Touch “Qu” on CONSULT-III screen to increase “PURG VOL CONT/V” opening to 100%.
5. Check vacuum hose for vacuum when revving engine up to 2,000 rpm.

OK or NG

OK >> GO TO 14.
NG >> GO TO 13.

12. CHECK EVAP CANISTER PURGE VOLUME CONTROL SOLENOID VALVE OPERATION

Without CONSULT-III

1. Start engine and warm it up to normal operating temperature.
2. Stop engine.
3. Disconnect vacuum hose to EVAP canister purge volume control solenoid valve at EVAP service port.
4. Start engine and let it idle for at least 80 seconds.
5. Check vacuum hose for vacuum when revving engine up to 2,000 rpm.

Vacuum should exist.

OK or NG

OK >> GO TO 15.
NG >> GO TO 13.

13. CHECK VACUUM HOSE

Check vacuum hoses for clogging or disconnection. Refer to EC-96, "Vacuum Hose Drawing".

OK or NG

OK (With CONSULT-III)>>GO TO 14.
OK (Without CONSULT-III)>>GO TO 15.
NG >> Repair or reconnect the hose.

14. CHECK EVAP CANISTER PURGE VOLUME CONTROL SOLENOID VALVE

With CONSULT-III

1. Start engine.
2. Perform “PURG VOL CONT/V” in “ACTIVE TEST” mode with CONSULT-III. Check that engine speed varies according to the valve opening.

OK or NG

OK >> GO TO 16.
NG >> GO TO 15.

15. CHECK EVAP CANISTER PURGE VOLUME CONTROL SOLENOID VALVE

Refer to EC-384, "Component Inspection".

OK or NG

OK >> GO TO 16.
NG >> Replace EVAP canister purge volume control solenoid valve.

16. CHECK FUEL TANK TEMPERATURE SENSOR

Refer to EC-294, "Component Inspection".

OK or NG

OK >> GO TO 17.
NG >> Replace fuel level sensor unit.

17. CHECK EVAP CONTROL SYSTEM PRESSURE SENSOR

Refer to EC-404, "Component Inspection".

OK or NG

OK >> GO TO 18.
NG >> Replace EVAP control system pressure sensor.

18. CHECK EVAP/ORVR LINE

Check EVAP/ORVR line between EVAP canister and fuel tank for clogging, kink, looseness and improper connection. For location, refer to EC-34.

OK or NG

OK >> GO TO 19.
NG >> Repair or replace hoses and tubes.

19. CHECK RECIRCULATION LINE

Check recirculation line between filler neck tube and fuel tank for clogging, kink, cracks, looseness and improper connection.

OK or NG

OK >> GO TO 20.
NG >> Repair or replace hose, tube or filler neck tube.

20. CHECK REFUELING EVAP VAPOR CUT VALVE

Refer to EC-36, "Component Inspection".

OK or NG

OK >> GO TO 21.
NG >> Replace refueling EVAP vapor cut valve with fuel tank.

21. CHECK INTERMITTENT INCIDENT

Refer to EC-130.

>> **INSPECTION END**

DTC P0456 EVAP CONTROL SYSTEM

On Board Diagnosis Logic

INFOID:0000000001717512

This diagnosis detects very small leaks in the EVAP line between fuel tank and EVAP canister purge volume control solenoid valve, using the intake manifold vacuum in the same way as conventional EVAP small leak diagnosis.
If ECM judges a leak which corresponds to a very small leak, the very small leak P0456 will be detected.
If ECM judges a leak equivalent to a small leak, EVAP small leak P0442 will be detected.
If ECM judges there are no leaks, the diagnosis will be OK.

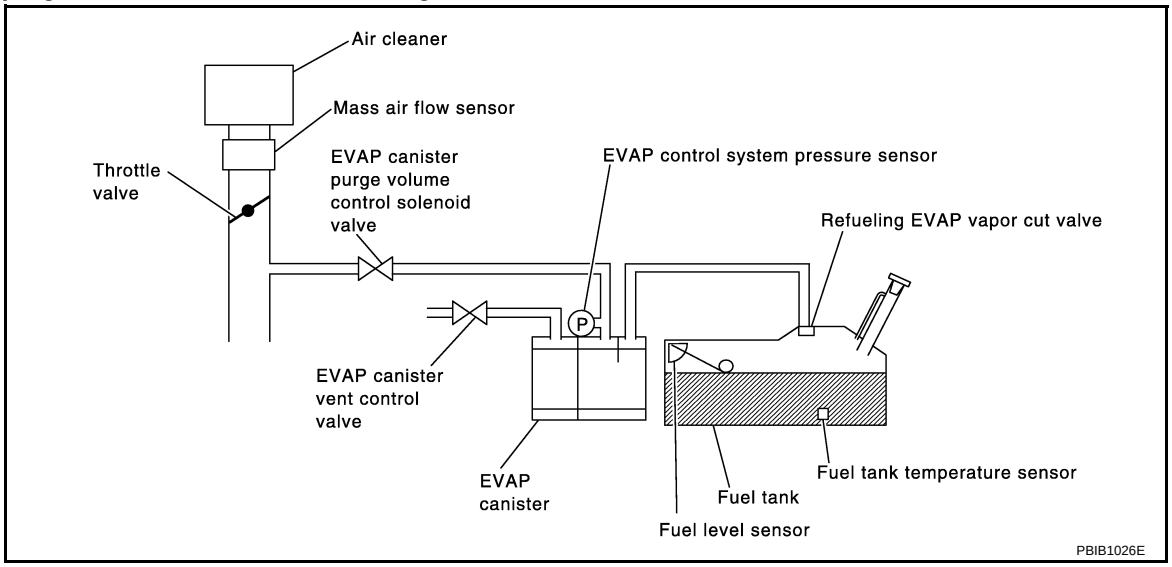

DTC No.	Trouble diagnosis name	DTC detecting condition	Possible cause
P0456 0456	Evaporative emission control system very small leak (negative pressure check)	• EVAP system has a very small leak. • EVAP system does not operate properly.	• Incorrect fuel tank vacuum relief valve • Incorrect fuel filler cap used • Fuel filler cap remains open or fails to close. • Foreign matter caught in fuel filler cap. • Leak is in line between intake manifold and EVAP canister purge volume control solenoid valve. • Foreign matter caught in EVAP canister vent control valve. • EVAP canister or fuel tank leaks • EVAP purge line (pipe and rubber tube) leaks • EVAP purge line rubber tube bent • Loose or disconnected rubber tube • EVAP canister vent control valve and the circuit • EVAP canister purge volume control solenoid valve and the circuit • Fuel tank temperature sensor • O-ring of EVAP canister vent control valve is missing or damaged • EVAP canister is saturated with water • EVAP control system pressure sensor • Refueling EVAP vapor cut valve • ORVR system leaks • Fuel level sensor and the circuit • Foreign matter caught in EVAP canister purge volume control solenoid valve

CAUTION:
- **Use only a genuine NISSAN fuel filler cap as a replacement. If an incorrect fuel filler cap is used, the MIL may come on.**
- **If the fuel filler cap is not tightened properly, the MIL may come on.**
- **Use only a genuine NISSAN rubber tube as a replacement.**

DTC Confirmation Procedure

INFOID:0000000001717513

NOTE:
- **If DTC P0456 is displayed with P0442, first perform trouble diagnosis for DTC P0456.**
- **After repair, make sure that the hoses and clips are installed properly.**
- If DTC Confirmation Procedure has been previously conducted, always perform the following before conducting the next step.

1. Turn ignition switch OFF and wait at least 10 seconds.
2. Turn ignition switch ON.
3. Turn ignition switch OFF and wait at least 10 seconds.

TESTING CONDITION:
- **Open engine hood before conducting following procedure.**
- **If any of following conditions are met just before the DTC confirmation procedure, leave the vehicle for more than 1 hour.**
- **Fuel filler cap is removed.**
- **Refilled or drained the fuel.**
- **EVAP component parts is/are removed.**
- **Before performing the following procedure, confirm that battery voltage is more than 11V at idle.**

WITH CONSULT-III

1. Turn ignition switch ON and select “DATA MONITOR” mode with CONSULT-III.
2. Make sure the following conditions are met.
   FUEL LEVEL SE: 0.25 - 1.4V
   COOLAN TEMP/S: 0 - 32°C (32 - 90°F)
   FUEL T/TMP SE: 0 - 35°C (32 - 95°F)
   INT/A TEMP SE: More than 0°C (32°F)
   If NG, turn ignition switch OFF and leave the vehicle in a cool place (soak the vehicle) or refilling/draining fuel until the output voltage condition of the “FUEL LEVEL SE” meets within the range above and leave the vehicle for more than 1 hour. Then start from step 1).
3. Turn ignition switch OFF and wait at least 10 seconds.
4. Turn ignition switch ON.
5. Select “EVAP V/S LEAK P0456/P1456” of “EVAPORATIVE SYSTEM” in “DTC WORK SUPPORT” mode with CONSULT-III.
   Follow the instruction displayed.
6. Make sure that “OK” is displayed.
   If “NG” is displayed, refer to EC-420, "Diagnosis Procedure".
   NOTE:
   - **If the engine speed cannot be maintained within the range displayed on CONSULT-III screen, go to EC-68, "Basic Inspection".**
   - **Make sure that EVAP hoses are connected to EVAP canister purge volume control solenoid valve properly.**

Overall Function Check

INFOID:0000000001717514

WITH GST

Use this procedure to check the overall function of the EVAP very small leak function. During this check, a 1st trip DTC might not be confirmed.

CAUTION:
- **Never use compressed air, doing so may damage the EVAP system.**
- **Do not start engine.**
- **Do not exceeded 4.12 kPa (0.042 kg/cm^2, 0.6 psi).**

1. Attach the EVAP service port adapter securely to the EVAP service port.

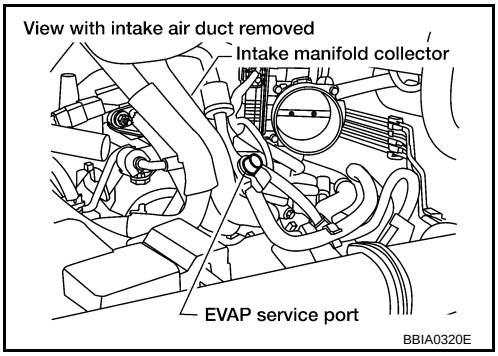

2. Set the pressure pump and a hose.
3. Also set a vacuum gauge via 3-way connector and a hose.
4. Turn ignition switch ON.
5. Connect GST and select Service $08.
6. Using Service $08 control the EVAP canister vent control valve (close).
7. Apply pressure and make sure the following conditions are satisfied.
   Pressure to be applied: 2.7 kPa (20 mmHg, 0.79 inHg)
   Time to be waited after the pressure drawn in to the EVAP system and the pressure to be dropped: 60 seconds and the pressure should not be dropped more than 0.4 kPa (3 mmHg, 0.12 inHg).
   If NG, go to EC-420, "Diagnosis Procedure".
   If OK, go to next step.

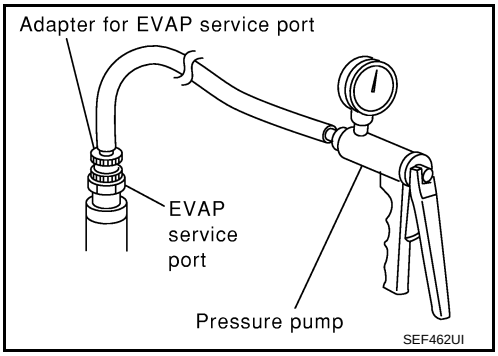

8. Disconnect GST.
9. Start engine and warm it up to normal operating temperature.
10. Turn ignition switch OFF and wait at least 10 seconds.
11. Turn ignition switch ON.
12. Turn ignition switch OFF and wait at least 10 seconds.
13. Restart engine and let it idle for 90 seconds.
14. Keep engine speed at 2,000 rpm for 30 seconds.
15. Turn ignition switch OFF.
    NOTE:
    For more information, refer to GST instruction manual.

Diagnosis Procedure

INFOID:0000000001717515

1. CHECK FUEL FILLER CAP DESIGN

1. Turn ignition switch OFF.
2. Check for genuine NISSAN fuel filler cap design.

OK or NG

OK >> GO TO 2.
NG >> Replace with genuine NISSAN fuel filler cap.

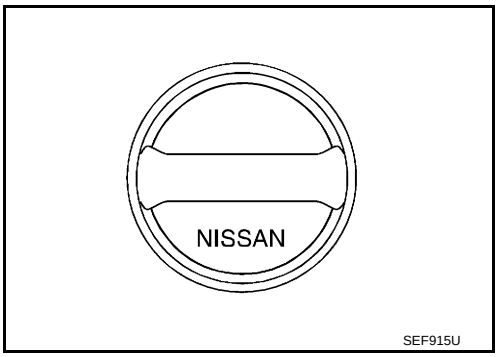

2. CHECK FUEL FILLER CAP INSTALLATION

Check that the cap is tightened properly by rotating the cap clockwise.

OK or NG

OK >> GO TO 3.
NG >> 1. Open fuel filler cap, then clean cap and fuel filler neck threads using air blower.
2. Retighten until ratcheting sound is heard.

3. CHECK FUEL FILLER CAP FUNCTION

Check for air releasing sound while opening the fuel filler cap.

OK or NG

OK >> GO TO 5.
NG >> GO TO 4.

4. CHECK FUEL TANK VACUUM RELIEF VALVE

Refer to EC-30, "Component Inspection".

OK or NG

OK >> GO TO 5.
NG >> Replace fuel filler cap with a genuine one.

5. INSTALL THE PRESSURE PUMP

To locate the EVAP leak, install EVAP service port adapter and pressure pump to EVAP service port securely.

NOTE:
Improper installation of the EVAP service port adapter to the EVAP service port may cause leaking.

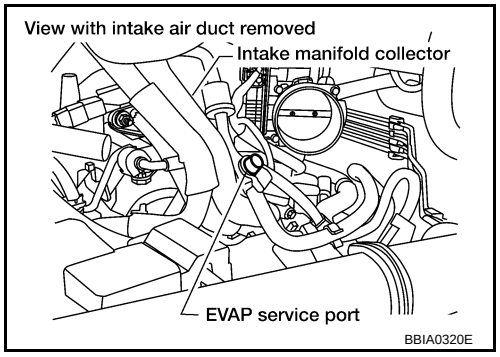

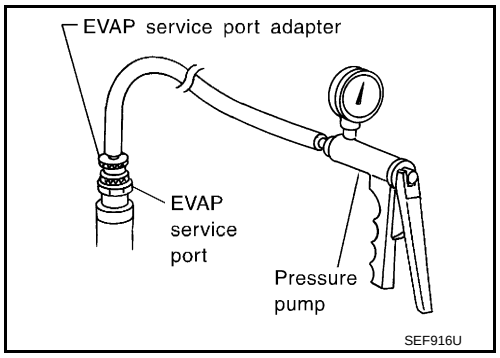

With CONSULT-III>>GO TO 6.
Without CONSULT-III>>GO TO 7.

6. CHECK FOR EVAP LEAK

With CONSULT-III

1. Turn ignition switch ON.
2. Select “EVAP SYSTEM CLOSE” of “WORK SUPPORT” mode with CONSULT-III.
3. Touch “START” and apply pressure into the EVAP line until the pressure indicator reaches the middle of the bar graph.

   CAUTION:
   - **Never use compressed air or a high pressure pump.**
   - **Do not exceed 4.12 kPa (0.042 kg/cm^2, 0.6 psi) of pressure in the system.**

4. Using EVAP leak detector, locate the EVAP leak. For the leak detector, refer to the instruction manual for more details. Refer to EC-28, "Description".

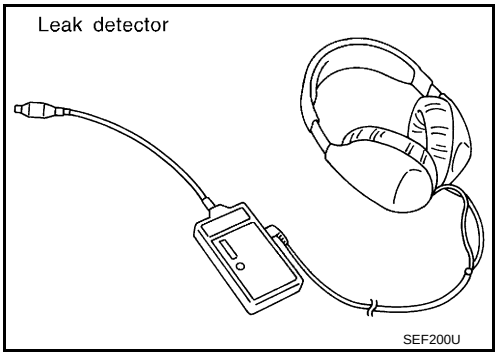

OK or NG

OK >> GO TO 8.
NG >> Repair or replace.

7. CHECK FOR EVAP LEAK

Without CONSULT-III

1. Turn ignition switch OFF.
2. Apply 12 volts DC to EVAP canister vent control valve. The valve will close. (Continue to apply 12 volts until the end of test.)

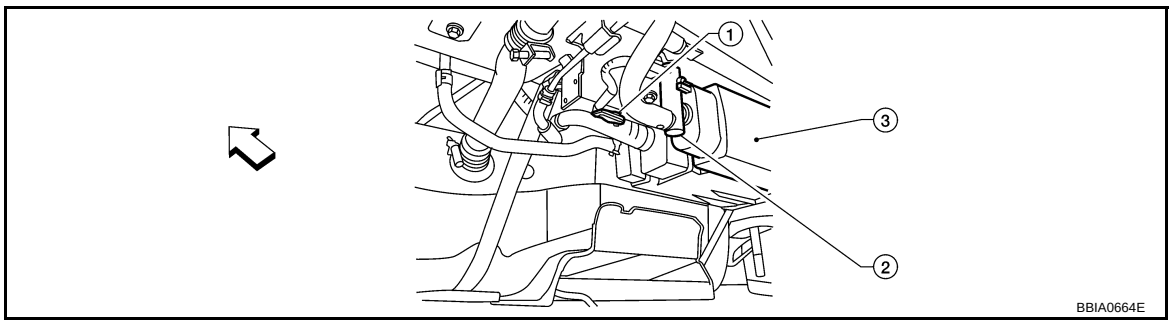

⇦ Vehicle front

1. EVAP control system pressure sensor 2. EVAP canister vent control valve 3. EVAP canister

3. Pressurize the EVAP line using pressure pump with 1.3 to 2.7 kPa (10 to 20 mmHg, 0.39 to 0.79 inHg), then remove pump and EVAP service port adapter.
   CAUTION:
   - **Never use compressed air or a high pressure pump.**
   - **Do not exceed 4.12 kPa (0.042 kg/cm^2, 0.6 psi) of pressure in the system.**
4. Using EVAP leak detector, locate the EVAP leak. For the leak detector, refer to the instruction manual for more details. Refer to EC-28, "Description".

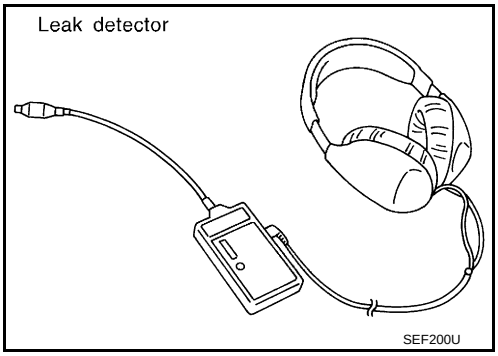

OK or NG

OK >> GO TO 8.
NG >> Repair or replace.

8. CHECK EVAP CANISTER VENT CONTROL VALVE

Check the following.

- EVAP canister vent control valve is installed properly.
  Refer to EC-32, "Removal and Installation".
- EVAP canister vent control valve.
  Refer to EC-389, "Component Inspection".

OK or NG

OK >> GO TO 9.
NG >> Repair or replace EVAP canister vent control valve and O-ring.

9. CHECK IF EVAP CANISTER SATURATED WITH WATER

1. Remove EVAP canister with EVAP canister vent control valve and EVAP control system pressure sensor attached.
2. Does water drain from the EVAP canister?

Yes or No

Yes >> GO TO 10.
No (With CONSULT-III)>>GO TO 12.
No (Without CONSULT-III)>>GO TO 13.

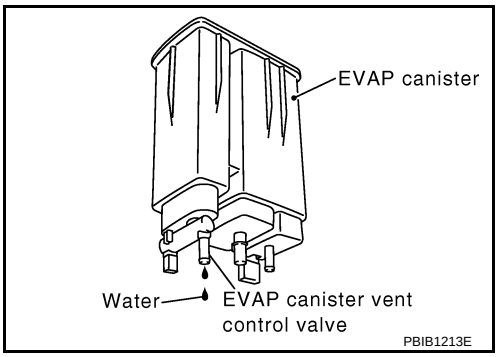

10. CHECK EVAP CANISTER

Weigh the EVAP canister with the EVAP canister vent control valve and EVAP control system pressure sensor attached.

The weight should be less than 2.1 kg (4.6 lb).

OK or NG

OK (With CONSULT-III)>>GO TO 12.
OK (Without CONSULT-III)>>GO TO 13.
NG >> GO TO 11.

11. DETECT MALFUNCTIONING PART

Check the following.
- EVAP canister for damage
- EVAP hose between EVAP canister and vehicle frame for clogging or poor connection

>> Repair hose or replace EVAP canister.

12. CHECK EVAP CANISTER PURGE VOLUME CONTROL SOLENOID VALVE OPERATION

With CONSULT-III

1. Disconnect vacuum hose to EVAP canister purge volume control solenoid valve at EVAP service port.
2. Start engine.
3. Perform “PURG VOL CONT/V” in “ACTIVE TEST” mode.
4. Touch “Qu” on CONSULT-III screen to increase “PURG VOL CONT/V” opening to 100%.
5. Check vacuum hose for vacuum when revving engine up to 2,000 rpm.

OK or NG

OK >> GO TO 15.
NG >> GO TO 14.

13. CHECK EVAP CANISTER PURGE VOLUME CONTROL SOLENOID VALVE OPERATION

Without CONSULT-III

1. Start engine and warm it up to normal operating temperature.
2. Stop engine.
3. Disconnect vacuum hose to EVAP canister purge volume control solenoid valve at EVAP service port.
4. Start engine and let it idle for at least 80 seconds.
5. Check vacuum hose for vacuum when revving engine up to 2,000 rpm.

Vacuum should exist.

OK or NG

OK >> GO TO 16.
NG >> GO TO 14.

14. CHECK VACUUM HOSE

Check vacuum hoses for clogging or disconnection. Refer to EC-96, "Vacuum Hose Drawing".

OK or NG

OK >> GO TO 15.
NG >> Repair or reconnect the hose.

15. CHECK EVAP CANISTER PURGE VOLUME CONTROL SOLENOID VALVE

Refer to EC-384, "Component Inspection".

OK or NG

OK >> GO TO 16.
NG >> Replace EVAP canister purge volume control solenoid valve.

16. CHECK FUEL TANK TEMPERATURE SENSOR

Refer to EC-294, "Component Inspection".

OK or NG

OK >> GO TO 17.
NG >> Replace fuel level sensor unit.

17. CHECK EVAP CONTROL SYSTEM PRESSURE SENSOR

Refer to EC-404, "Component Inspection".

OK or NG

OK >> GO TO 18.
NG >> Replace EVAP control system pressure sensor.

18. CHECK EVAP PURGE LINE

Check EVAP purge line (pipe, rubber tube, fuel tank and EVAP canister) for cracks or improper connection. Refer to EC-28, "Description".

OK or NG

OK >> GO TO 19.
NG >> Repair or reconnect the hose.

19. CLEAN EVAP PURGE LINE

Clean EVAP purge line (pipe and rubber tube) using air blower.

>> GO TO 20.

20. CHECK EVAP/ORVR LINE

Check EVAP/ORVR line between EVAP canister and fuel tank for clogging, kink, looseness and improper connection. For location, refer to EC-34.

OK or NG

OK >> GO TO 21.
NG >> Repair or replace hoses and tubes.

21. CHECK RECIRCULATION LINE

Check recirculation line between filler neck tube and fuel tank for clogging, kink, cracks, looseness and improper connection.

OK or NG

OK >> GO TO 22.
NG >> Repair or replace hose, tube or filler neck tube.

22. CHECK REFUELING EVAP VAPOR CUT VALVE

Refer to EC-36, "Component Inspection".

OK or NG

OK >> GO TO 23.
NG >> Replace refueling EVAP vapor cut valve with fuel tank.

23. CHECK FUEL LEVEL SENSOR

Refer to DI-19, "Fuel Level Sensor Unit Inspection".

OK or NG

OK >> GO TO 24.
NG >> Replace fuel level sensor unit.

24. CHECK INTERMITTENT INCIDENT

Refer to EC-130.

>> **INSPECTION END**

DTC P0460 FUEL LEVEL SENSOR

Component Description

INFOID:0000000001717516

The fuel level sensor is mounted in the fuel level sensor unit. The sensor detects a fuel level in the fuel tank and transmits a signal to the combination meter. The combination meter sends the fuel level sensor signal to the ECM through CAN communication line.
It consists of two parts, one is mechanical float and the other is variable resistor. Fuel level sensor output voltage changes depending on the movement of the fuel mechanical float.

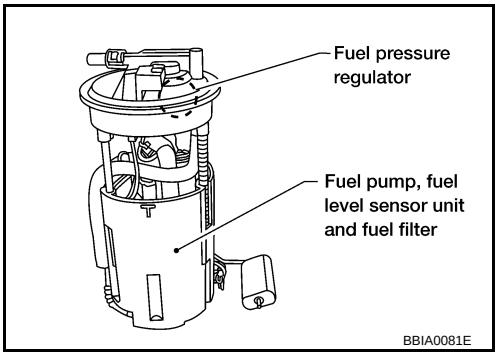

On Board Diagnosis Logic

INFOID:0000000001717517

NOTE:
- **If DTC P0460 is displayed with DTC U1000 or U1001, first perform the trouble diagnosis for DTC U1000, U1001. Refer to EC-139.**
- **If DTC P0460 is displayed with DTC U1010, first perform the trouble diagnosis for DTC U1010. Refer to EC-141.**

When the vehicle is parked, naturally the fuel level in the fuel tank is stable. It means that output signal of the fuel level sensor does not change. If ECM senses sloshing signal from the sensor, fuel level sensor malfunction is detected.

DTC No.	Trouble diagnosis name	DTC detecting condition	Possible cause
P0460 0460	Fuel level sensor circuit noise	Even though the vehicle is parked, a signal being varied is sent from the fuel level sensor to ECM.	• Harness or connectors (The CAN communication line is open or shorted) • Harness or connectors (The sensor circuit is open or shorted) • Combination meter • Fuel level sensor

DTC Confirmation Procedure

INFOID:0000000001717518

1. If DTC Confirmation Procedure has been previously conducted, always perform the following before conducting the next step.

a. Turn ignition switch OFF and wait at least 10 seconds.
b. Turn ignition switch ON.
c. Turn ignition switch OFF and wait at least 10 seconds.

2. Start engine and wait maximum of 2 consecutive minutes.
3. Check 1st trip DTC.
4. If 1st trip DTC is detected, go to EC-426, "Diagnosis Procedure".

Diagnosis Procedure

INFOID:0000000001717519

1. CHECK FUEL GAUGE OPERATION

Refer to DI-13, "Self-Diagnosis Mode of Combination Meter".

OK or NG

OK >> GO TO 2.
NG >> Follow the instruction of DI-13, "Self-Diagnosis Mode of Combination Meter".

2. CHECK FUEL LEVEL SENSOR AND CIRCUIT

Refer to DI-19, "Fuel Level Sensor Unit Inspection".

OK or NG

OK >> GO TO 3.
NG >> Repair or replace malfunctioning parts.

3. CHECK INTERMITTENT INCIDENT

Refer to EC-130.

>> **INSPECTION END**

Removal and Installation

INFOID:0000000001717520

FUEL LEVEL SENSOR

Refer to FL-5.

DTC P0461 FUEL LEVEL SENSOR

Component Description

INFOID:0000000001717521

The fuel level sensor is mounted in the fuel level sensor unit. The sensor detects a fuel level in the fuel tank and transmits a signal to the combination meter. The combination meter sends the fuel level sensor signal to the ECM through CAN communication line.
It consists of two parts, one is mechanical float and the other is variable resistor. Fuel level sensor output voltage changes depending on the movement of the fuel mechanical float.

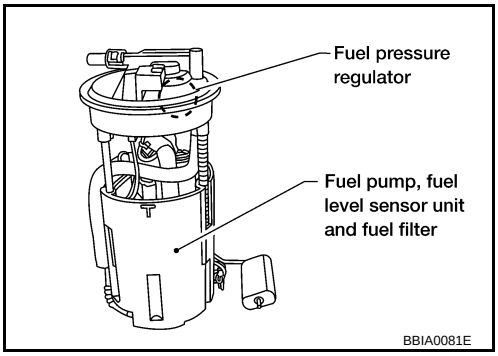

On Board Diagnosis Logic

INFOID:0000000001717522

NOTE:
- **If DTC P0461 is displayed with DTC U1000 or U1001, first perform the trouble diagnosis for DTC U1000, U1001. Refer to EC-139.**
- **If DTC P0461 is displayed with DTC U1010, first perform the trouble diagnosis for DTC U1010. Refer to EC-141.**

Driving long distances naturally affect fuel gauge level.
This diagnosis detects the fuel gauge malfunction of the gauge not moving even after a long distance has been driven.

DTC No.	Trouble diagnosis name	DTC detecting condition	Possible cause
P0461 0461	Fuel level sensor circuit range/performance	The output signal of the fuel level sensor does not change within the specified range even though the vehicle has been driven a long distance.	• Harness or connectors (The CAN communication line is open or shorted) • Harness or connectors (The sensor circuit is open or shorted) • Combination meter • Fuel level sensor

Overall Function Check

INFOID:0000000001717523

Use this procedure to check the overall function of the fuel level sensor function. During this check, a 1st trip DTC might not be confirmed.

WARNING:
When performing following procedure, be sure to observe the handling of the fuel. Refer to FL-9.
TESTING CONDITION:
Before starting overall function check, preparation of draining fuel and refilling fuel is required.

WITH CONSULT-III

NOTE:
Start from step 10, if it is possible to confirm that the fuel cannot be drained by 30 ℓ (7-7/8 US gal, 6-5/8 Imp gal) in advance.

1. Prepare a fuel container and a spare hose.
2. Release fuel pressure from fuel line, refer to EC-75, "Fuel Pressure Check".
3. Remove the fuel feed hose on the fuel level sensor unit.
4. Connect a spare fuel hose where the fuel feed hose was removed.
5. Turn ignition switch OFF and wait at least 10 seconds then turn ON.
6. Select “FUEL LEVEL SE” in “DATA MONITOR” mode with CONSULT-III.
7. Check “FUEL LEVEL SE” output voltage and note it.
8. Select “FUEL PUMP” in “ACTIVE TEST” mode with CONSULT-III.
9. Touch “ON” and drain fuel approximately 30 ℓ (7-7/8 US gal, 6-5/8 Imp gal) and stop it.
10. Check “FUEL LEVEL SE” output voltage and note it.
11. Fill fuel into the fuel tank for 30 ℓ (7-7/8 US gal, 6-5/8 Imp gal).
12. Check “FUEL LEVEL SE” output voltage and note it.

13. Confirm whether the voltage changes more than 0.03V during step 7 to 10 and 10 to 12.
    If NG, go to EC-429, "Diagnosis Procedure".

WITH GST

NOTE:
Start from step 8, if it is possible to confirm that the fuel cannot be drained by 30 ℓ (7-7/8 US gal, 6-5/8 Imp gal) in advance.

1. Prepare a fuel container and a spare hose.
2. Release fuel pressure from fuel line. Refer to EC-75, "Fuel Pressure Check".
3. Remove the fuel feed hose on the fuel level sensor unit.
4. Connect a spare fuel hose where the fuel feed hose was removed.
5. Turn ignition switch ON.
6. Drain fuel by 30 ℓ (7-7/8 US gal, 6-5/8 Imp gal) from the fuel tank using proper equipment.
7. Confirm that the fuel gauge indication varies.
8. Fill fuel into the fuel tank for 30 ℓ (7-7/8 US gal, 6-5/8 Imp gal).
9. Confirm that the fuel gauge indication varies.
10. If NG, go to EC-429, "Diagnosis Procedure".

Diagnosis Procedure

INFOID:0000000001717524

1. CHECK FUEL GAUGE OPERATION

Refer to DI-13, "Self-Diagnosis Mode of Combination Meter".

OK or NG

OK >> GO TO 2.
NG >> Follow the instruction of DI-13, "Self-Diagnosis Mode of Combination Meter".

2. CHECK FUEL LEVEL SENSOR AND CIRCUIT

Refer to DI-19, "Fuel Level Sensor Unit Inspection".

OK or NG

OK >> GO TO 3.
NG >> Repair or replace malfunctioning parts.

3. CHECK INTERMITTENT INCIDENT

Refer to EC-130.

>> **INSPECTION END**

Removal and Installation

INFOID:0000000001717525

FUEL LEVEL SENSOR

Refer to FL-5.

DTC P0462, P0463 FUEL LEVEL SENSOR

Component Description

INFOID:0000000001717526

The fuel level sensor is mounted in the fuel level sensor unit. The sensor detects a fuel level in the fuel tank and transmits a signal to the combination meter. The combination meter sends the fuel level sensor signal to the ECM through CAN communication line.
It consists of two parts, one is mechanical float and the other is variable resistor. Fuel level sensor output voltage changes depending on the movement of the fuel mechanical float.

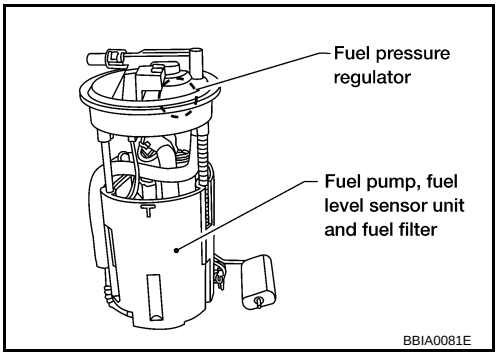

On Board Diagnosis Logic

INFOID:0000000001717527

NOTE:
- **If DTC P0462 or P0463 is displayed with DTC U1000 or U1001, first perform the trouble diagnosis for DTC U1000, U1001. Refer to EC-139.**
- **If DTC P0462 is displayed with DTC U1010, first perform the trouble diagnosis for DTC U1010. Refer to EC-141.**

This diagnosis indicates the former, to detect open or short circuit malfunction.

DTC No.	Trouble diagnosis name	DTC detecting condition	Possible cause
P0462 0462	Fuel level sensor circuit low input	An excessively low voltage is sent from the sensor is sent to ECM.	• Harness or connectors (The CAN communication line is open or shorted) • Harness or connectors (The sensor circuit is open or shorted) • Combination meter • Fuel level sensor
P0463 0463	Fuel level sensor circuit high input	An excessively high voltage is sent from the sensor is sent to ECM.	

DTC Confirmation Procedure

INFOID:0000000001717528

NOTE:
If DTC Confirmation Procedure has been previously conducted, always perform the following before conducting the next step.
1. Turn ignition switch OFF and wait at least 10 seconds.
2. Turn ignition switch ON.
3. Turn ignition switch OFF and wait at least 10 seconds.

TESTING CONDITION:
Before performing the following procedure, confirm that battery voltage is more than 11V at ignition switch ON.

1. Turn ignition switch ON.
2. Wait at least 5 seconds.
3. Check 1st trip DTC.
4. If 1st trip DTC is detected, go to EC-430, "Diagnosis Procedure".

Diagnosis Procedure

INFOID:0000000001717529

1. CHECK FUEL GAUGE OPERATION

Refer to DI-13, "Self-Diagnosis Mode of Combination Meter".

OK or NG

OK >> GO TO 2.
NG >> Follow the instruction of DI-13, "Self-Diagnosis Mode of Combination Meter".

2. CHECK FUEL LEVEL SENSOR AND CIRCUIT

Refer to DI-19, "Fuel Level Sensor Unit Inspection".

OK or NG

OK >> GO TO 3.
NG >> Repair or replace malfunctioning parts.

3. CHECK INTERMITTENT INCIDENT

Refer to EC-130.

>> **INSPECTION END**

Removal and Installation

INFOID:0000000001717530

FUEL LEVEL SENSOR

Refer to FL-5.

DTC P0500 VSS

Description

INFOID:0000000001717531

NOTE:
- **If DTC P0500 is displayed with DTC U1000 or U1001, first perform the trouble diagnosis for DTC U1000, U1001. Refer to EC-139.**
- **If DTC P0500 is displayed with DTC U1010, first perform the trouble diagnosis for DTC U1010. Refer to EC-141.**

The vehicle speed signal is sent to the combination meter from the “ABS actuator and electric unit (control unit)” by CAN communication line. The combination meter then sends the signal to the ECM by CAN communication line.

On Board Diagnosis Logic

INFOID:0000000001717532

DTC No.	Trouble diagnosis name	DTC detecting condition	Possible cause
P0500 0500	Vehicle speed sensor	The almost 0 km/h (0 MPH) signal from vehicle speed sensor is sent to ECM even when vehicle is being driven.	• Harness or connectors (The CAN communication line is open or shorted) • Harness or connectors (The vehicle speed signal circuit is open or shorted) • Wheel sensor • Combination meter • ABS actuator and electric unit (control unit)

FAIL-SAFE MODE

When the malfunction is detected, the ECM enters fail-safe mode.

Detected items	Engine operating condition in fail-safe mode
Vehicle speed sensor	When the fail-safe system for vehicle speed sensor is activated, the cooling fan operates (High) while engine is running.

DTC Confirmation Procedure

INFOID:0000000001717533

CAUTION:
Always drive vehicle at a safe speed.
NOTE:
If DTC Confirmation Procedure has been previously conducted, always perform the following before conducting the next step.
1. Turn ignition switch OFF and wait at least 10 seconds.
2. Turn ignition switch ON.
3. Turn ignition switch OFF and wait at least 10 seconds.

TESTING CONDITION:
Steps 1 and 2 may be conducted with the drive wheels lifted in the shop or by driving the vehicle. If a road test is expected to be easier, it is unnecessary to lift the vehicle.

WITH CONSULT-III

1. Start engine (TCS switch or VDC switch OFF).
2. Read “VHCL SPEED SE” in “DATA MONITOR” mode with CONSULT-III. The vehicle speed on CONSULT-III should exceed 10 km/h (6 MPH) when rotating wheels with suitable gear position.
   If NG, go to EC-433, "Diagnosis Procedure".
   If OK, go to following step.
3. Select “DATA MONITOR” mode with CONSULT-III.
4. Warm engine up to normal operating temperature.
5. Maintain the following conditions for at least 60 consecutive seconds.

ENG SPEED	1,600 - 6,000 rpm
COOLAN TEMP/S	More than 70°C (158°F)
B/FUEL SCHDL	4.4 - 31.8 msec
Shift lever	Except P or N position
PW/ST SIGNAL	OFF

6. Check 1st trip DTC.
7. If 1st trip DTC is detected, go to EC-433, "Diagnosis Procedure".

Overall Function Check

INFOID:0000000001717534

Use this procedure to check the overall function of the vehicle speed sensor circuit. During this check, a 1st trip DTC might not be confirmed.

WITH GST

1. Lift up drive wheels.
2. Start engine.
3. Read vehicle speed sensor signal in Service $01 with GST.
   The vehicle speed sensor on GST should be able to exceed 10 km/h (6 MPH) when rotating wheels with suitable gear position.
4. If NG, go to EC-433, "Diagnosis Procedure".

Diagnosis Procedure

INFOID:0000000001717535

1. CHECK DTC WITH “ABS ACTUATOR AND ELECTRIC UNIT (CONTROL UNIT)”

Refer to BRC-50 (models with VDC) or BRC-10 (models without VDC).

OK or NG

OK >> GO TO 2.
NG >> Repair or replace.

2. COMBINATION METER

Check combination meter function.
Refer to DI-5.

>> **INSPECTION END**

DTC P0506 ISC SYSTEM

Description

INFOID:0000000001717536

NOTE:
If DTC P0506 is displayed with other DTC, first perform the trouble diagnosis for the other DTC.
The ECM controls the engine idle speed to a specified level through the fine adjustment of the air, which is let into the intake manifold, by operating the electric throttle control actuator. The operating of the throttle valve is varied to allow for optimum control of the engine idling speed. The ECM calculates the actual engine speed from signals of crankshaft position sensor (POS) and camshaft position sensor (PHASE).
The ECM controls the electric throttle control actuator so that the engine speed coincides with the target value memorized in the ECM. The target engine speed is the lowest speed at which the engine can operate steadily. The optimum value stored in the ECM is determined by taking into consideration various engine conditions, such as during warming up, deceleration, and engine load (air conditioner, power steering and cooling fan operation, etc.).

On Board Diagnosis Logic

INFOID:0000000001717537

DTC No.	Trouble diagnosis name	DTC detecting condition	Possible cause
P0506 0506	Idle speed control system RPM lower than expected	The idle speed is less than the target idle speed by 100 rpm or more.	• Electric throttle control actuator • Intake air leak

DTC Confirmation Procedure

INFOID:0000000001717538

NOTE:
- If DTC Confirmation Procedure has been previously conducted, always perform the following before conducting the next step.

1. Turn ignition switch OFF and wait at least 10 seconds.
2. Turn ignition switch ON.
3. Turn ignition switch OFF and wait at least 10 seconds.

- **If the target idle speed is out of the specified value, perform Idle Air Volume Learning, EC-73, before conducting DTC Confirmation Procedure. For the target idle speed, refer to the Service Data and Specifications (SDS), EC-618.**

TESTING CONDITION:
- **Before performing the following procedure, confirm that battery voltage is more than 11V at idle.**
- **Always perform the test at a temperature above –10°C (14°F).**

1. Open engine hood.
2. Start engine and warm it up to normal operating temperature.
3. Turn ignition switch OFF and wait at least 10 seconds.
4. Turn ignition switch ON.
5. Turn ignition switch OFF and wait at least 10 seconds.
6. Start engine and run it for at least 1 minute at idle speed.
7. Check 1st trip DTC.
8. If 1st trip DTC is detected, go to EC-434, "Diagnosis Procedure".

Diagnosis Procedure

INFOID:0000000001717539

1. CHECK INTAKE AIR LEAK

1. Start engine and let it idle.
2. Listen for an intake air leak after the mass air flow sensor.

OK or NG

OK >> GO TO 2.
NG >> Discover air leak location and repair.

2. REPLACE ECM

1. Stop engine.
2. Replace ECM.

3. Perform initialization of NVIS (NATS) system and registration of all NVIS (NATS) ignition key IDs. Refer to BL-180.
4. Perform EC-72, "VIN Registration".
5. Perform EC-73, "Accelerator Pedal Released Position Learning".
6. Perform EC-73, "Throttle Valve Closed Position Learning".
7. Perform EC-73, "Idle Air Volume Learning".

>> **INSPECTION END**

DTC P0507 ISC SYSTEM

Description

INFOID:0000000001717540

NOTE:
If DTC P0507 is displayed with other DTC, first perform the trouble diagnosis for the other DTC.
The ECM controls the engine idle speed to a specified level through the fine adjustment of the air, which is let into the intake manifold, by operating the electric throttle control actuator. The operating of the throttle valve is varied to allow for optimum control of the engine idling speed. The ECM calculates the actual engine speed from signals of crankshaft position sensor (POS) and camshaft position sensor (PHASE).
The ECM controls the electric throttle control actuator so that the engine speed coincides with the target value memorized in the ECM. The target engine speed is the lowest speed at which the engine can operate steadily. The optimum value stored in the ECM is determined by taking into consideration various engine conditions, such as during warming up, deceleration, and engine load (air conditioner, power steering and cooling fan operation, etc.).

On Board Diagnosis Logic

INFOID:0000000001717541

DTC No.	Trouble diagnosis name	DTC detecting condition	Possible cause
P0507 0507	Idle speed control system RPM higher than expected	The idle speed is more than the target idle speed by 200 rpm or more.	• Electric throttle control actuator • Intake air leak • PCV system

DTC Confirmation Procedure

INFOID:0000000001717542

NOTE:
- If DTC Confirmation Procedure has been previously conducted, always perform the following before conducting the next step.

1. Turn ignition switch OFF and wait at least 10 seconds.
2. Turn ignition switch ON.
3. Turn ignition switch OFF and wait at least 10 seconds.

- If the target idle speed is out of the specified value, perform Idle Air Volume Learning, **EC-73, before conducting DTC Confirmation Procedure. For the target idle speed, refer to the "Service Data and Specifications (SDS)", EC-618.**

TESTING CONDITION:
- **Before performing the following procedure, confirm that battery voltage is more than 11V at idle.**
- **Always perform the test at a temperature above –10°C (14°F).**

1. Open engine hood.
2. Start engine and warm it up to normal operating temperature.
3. Turn ignition switch OFF and wait at least 10 seconds.
4. Turn ignition switch ON.
5. Turn ignition switch OFF and wait at least 10 seconds.
6. Start engine and run it for at least 1 minute at idle speed.
7. Check 1st trip DTC.
8. If 1st trip DTC is detected, go to EC-436, "Diagnosis Procedure".

Diagnosis Procedure

INFOID:0000000001717543

1. CHECK PCV HOSE CONNECTION

Confirm that PCV hose is connected correctly.

OK or NG

OK >> GO TO 2.
NG >> Repair or replace.

2. CHECK INTAKE AIR LEAK

1. Start engine and let it idle.
2. Listen for an intake air leak after the mass air flow sensor.

OK or NG

OK >> GO TO 3.
NG >> Discover air leak location and repair.

3. REPLACE ECM

1. Stop engine.
2. Replace ECM.
3. Perform initialization of NVIS (NATS) system and registration of all NVIS (NATS) ignition key IDs. Refer to BL-180.
4. Perform EC-72, "VIN Registration".
5. Perform EC-73, "Accelerator Pedal Released Position Learning".
6. Perform EC-73, "Throttle Valve Closed Position Learning".
7. Perform EC-73, "Idle Air Volume Learning".

>> **INSPECTION END**

DTC P0550 PSP SENSOR

Component Description

INFOID:0000000001717544

Power steering pressure (PSP) sensor is installed to the power steering high-pressure tube and detects a power steering load. This sensor is a potentiometer which transforms the power steering load into output voltage, and emits the voltage signal to the ECM. The ECM controls the electric throttle control actuator and adjusts the throttle valve opening angle to increase the engine speed and adjusts the idle speed for the increased load.

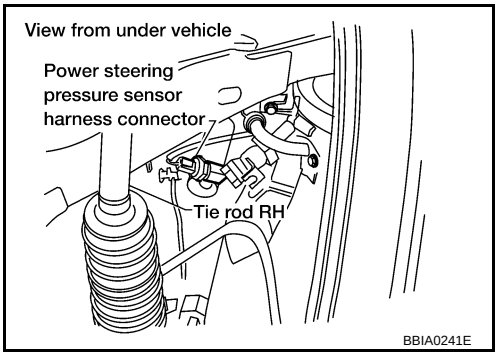

CONSULT-III Reference Value in Data Monitor Mode

INFOID:0000000001717545

Specification data are reference values.

MONITOR ITEM	CONDITION		SPECIFICATION
PW/ST SIGNAL	• Engine: After warming up, idle the engine	Steering wheel: Not being turned.	OFF
		Steering wheel: Being turned.	ON

On Board Diagnosis Logic

INFOID:0000000001717546

The MIL will not light up for this diagnosis.
NOTE:
If DTC P0550 is displayed with DTC P0643, first perform the trouble diagnosis for DTC P0643. Refer to EC-449.

DTC No.	Trouble diagnosis name	DTC detecting condition	Possible cause
P0550 0550	Power steering pressure sensor circuit	An excessively low or high voltage from the sensor is sent to ECM.	• Harness or connectors (The sensor circuit is open or shorted) • Power steering pressure sensor

DTC Confirmation Procedure

INFOID:0000000001717547

1. If DTC Confirmation Procedure has been previously conducted, always perform the following before conducting the next step.

a. Turn ignition switch OFF and wait at least 10 seconds.
b. Turn ignition switch ON.
c. Turn ignition switch OFF and wait at least 10 seconds.

2. Turn ignition switch ON.
3. Start engine and let it idle for at least 5 seconds.
4. Check 1st trip DTC.
5. If 1st trip DTC is detected, go to EC-440, "Diagnosis Procedure".

Wiring Diagram

INFOID:0000000001717548

EC-PS/SEN-01

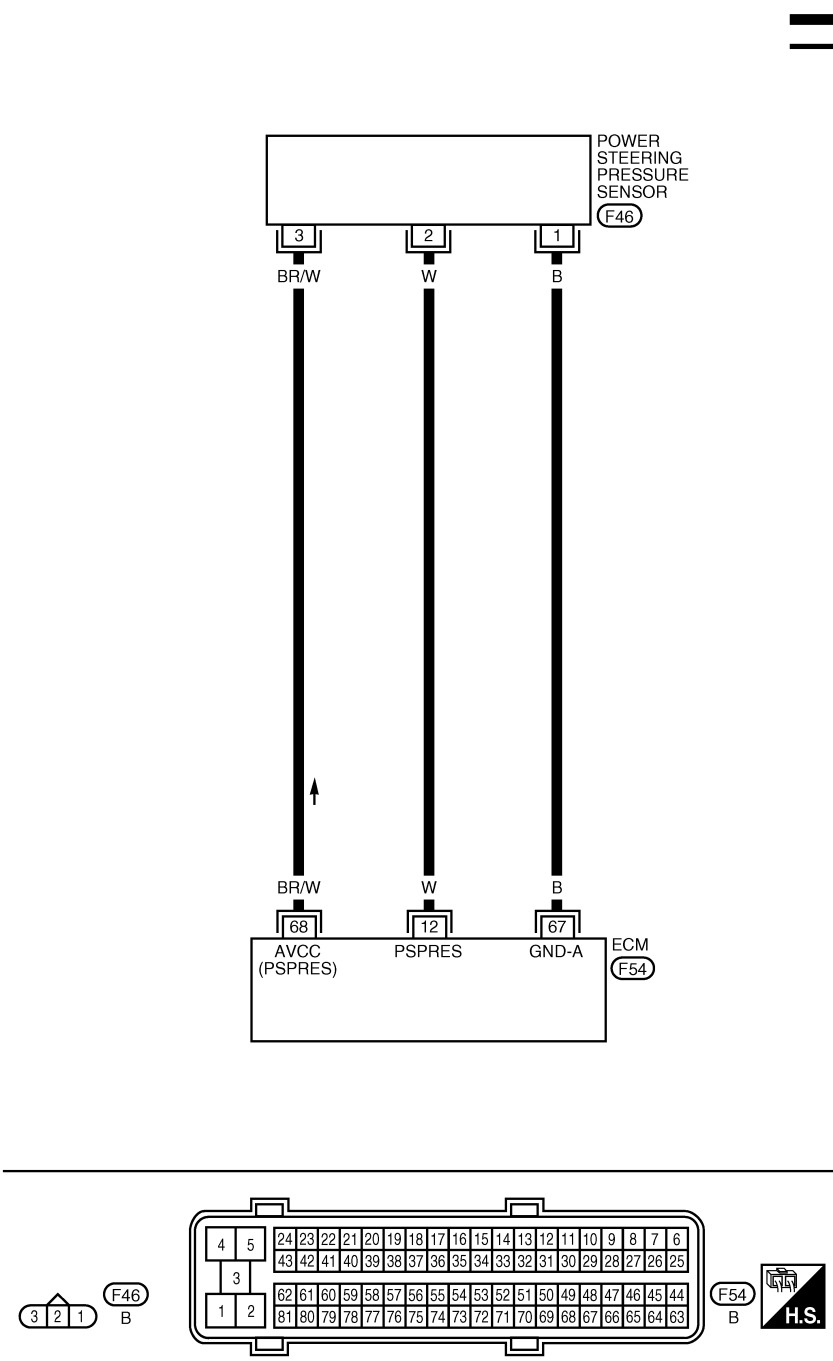

Specification data are reference values and are measured between each terminal and ground.

CAUTION:

Do not use ECM ground terminals when measuring input/output voltage. Doing so may result in damage to the ECM's transistor. Use a ground other than ECM terminals, such as the ground.

TER-MI-NAL NO.	WIRE COLOR	ITEM	CONDITION	DATA (DC Voltage)
12	W	Power steering pressure sensor	**[Engine is running]** • Steering wheel: Being turned	0.5 - 4.5V
			[Engine is running] • Steering wheel: Not being turned	0.4 - 0.8V
67	B	Sensor ground	**[Engine is running]** • **Warm-up condition** • Idle speed	Approximately 0V
68	BR/W	Power steering pressure sensor power supply	**[Ignition switch ON]**	Approximately 5V

Diagnosis Procedure

INFOID:0000000001717549

1. CHECK GROUND CONNECTIONS

1. Turn ignition switch OFF.
2. Loosen and retighten three ground screws on the body. Refer to EC-138, "Ground Inspection".

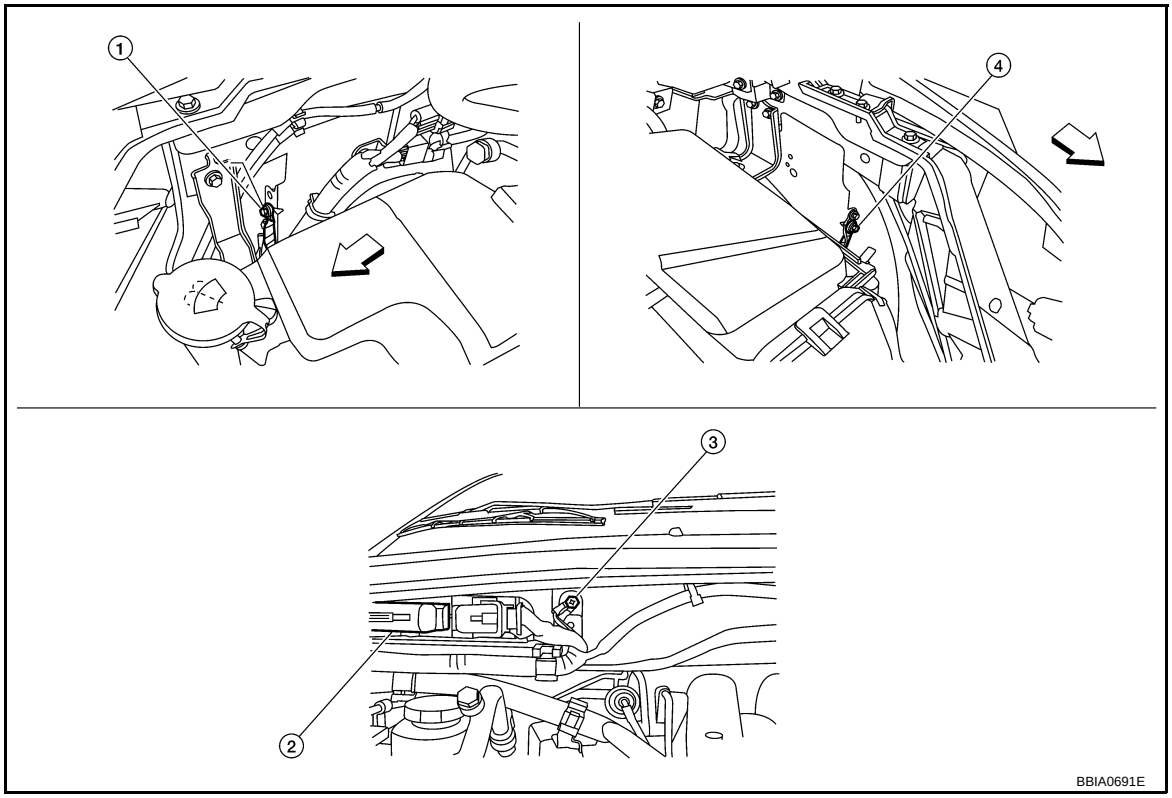

⇦: Vehicle front

1. Body ground E24
2. ECM
3. Body ground E9
4. Body ground E15

OK or NG

OK >> GO TO 2.
NG >> Repair or replace ground connections.

2. CHECK PSP SENSOR POWER SUPPLY CIRCUIT

1. Disconnect power steering pressure (PSP) sensor harness connector.
2. Turn ignition switch ON.

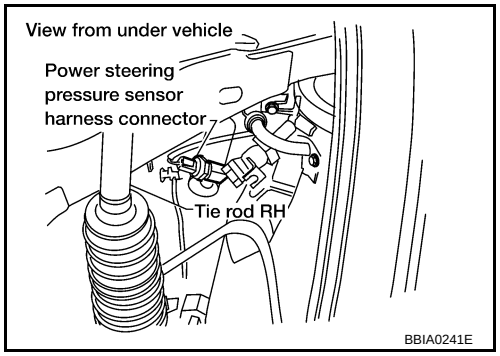

3. Check voltage between PSP sensor terminal 3 and ground with CONSULT-III or tester.

Voltage: Approximately 5V

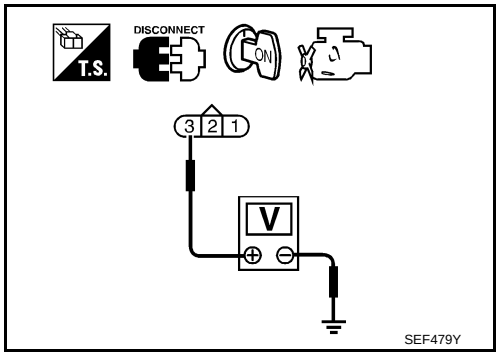

OK or NG

OK >> GO TO 3.
NG >> Repair open circuit or short to ground or short to power in harness or connectors.

3. CHECK PSP SENSOR GROUND CIRCUIT FOR OPEN AND SHORT

1. Turn ignition switch OFF.
2. Disconnect ECM harness connector.
3. Check harness continuity between PSP sensor terminal 1 and ECM terminal 67. Refer to Wiring Diagram.

Continuity should exist.

4. Also check harness for short to ground and short to power.

OK or NG

OK >> GO TO 4.
NG >> Repair open circuit or short to ground or short to power in harness or connectors.

4. CHECK PSP SENSOR INPUT SIGNAL CIRCUIT FOR OPEN AND SHORT

1. Check harness continuity between ECM terminal 12 and PSP sensor terminal 2. Refer to Wiring Diagram.

Continuity should exist.

2. Also check harness for short to ground and short to power.

OK or NG

OK >> GO TO 5.
NG >> Repair open circuit or short to ground or short to power in harness or connectors.

5. CHECK PSP SENSOR

Refer to EC-442, "Component Inspection".

OK or NG

OK >> GO TO 6.
NG >> Replace PSP sensor.

6. CHECK INTERMITTENT INCIDENT

Refer to EC-130.

>> **INSPECTION END**

Component Inspection

INFOID:0000000001717550

POWER STEERING PRESSURE SENSOR

1. Reconnect all harness connectors disconnected.
2. Start engine and let it idle.
3. Check voltage between ECM terminal 12 and ground under the following conditions.

Condition	Voltage
Steering wheel: Being turned	0.5 - 4.5V
Steering wheel: Not being turned	0.4 - 0.8V

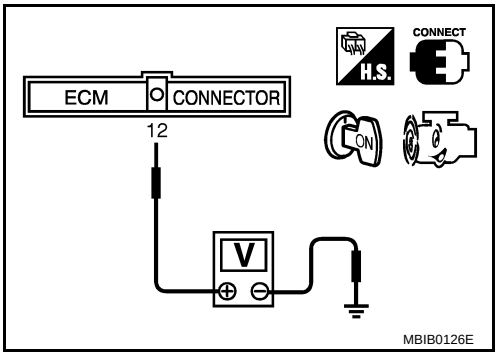

Removal and Installation

INFOID:0000000001717551

POWER STEERING PRESSURE SENSOR

Refer to PS-24.

DTC P0603 ECM POWER SUPPLY

Component Description

INFOID:0000000001717552

Battery voltage is supplied to the ECM even when the ignition switch is turned OFF for the ECM memory function of the DTC memory, the air-fuel ratio feedback compensation value memory, the idle air volume learning value memory, etc.

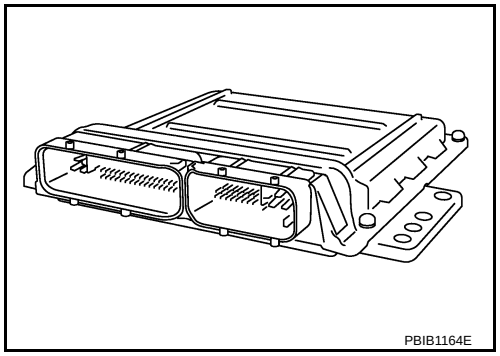

On Board Diagnosis Logic

INFOID:0000000001717553

DTC No.	Trouble diagnosis name	DTC detecting condition	Possible cause
P0603 0603	ECM power supply circuit	ECM back-up RAM system does not function properly.	• Harness or connectors [ECM power supply (back-up) circuit is open or shorted.] • ECM

DTC Confirmation Procedure

INFOID:0000000001717554

1. If DTC Confirmation Procedure has been previously conducted, always perform the following before conducting the next step.

a. Turn ignition switch OFF and wait at least 10 seconds.
b. Turn ignition switch ON.
c. Turn ignition switch OFF and wait at least 10 seconds.

2. Start engine and let it idle for 1 second.
3. Turn ignition switch OFF and wait at least 10 seconds.
4. Turn ignition switch ON and wait at least 1 second.
5. Repeat step 2 to 4 for 4 times.
6. Check 1st trip DTC.
7. If 1st trip DTC is detected, go to EC-445, "Diagnosis Procedure".

Wiring Diagram

INFOID:0000000001717555

EC-ECM/PW-01

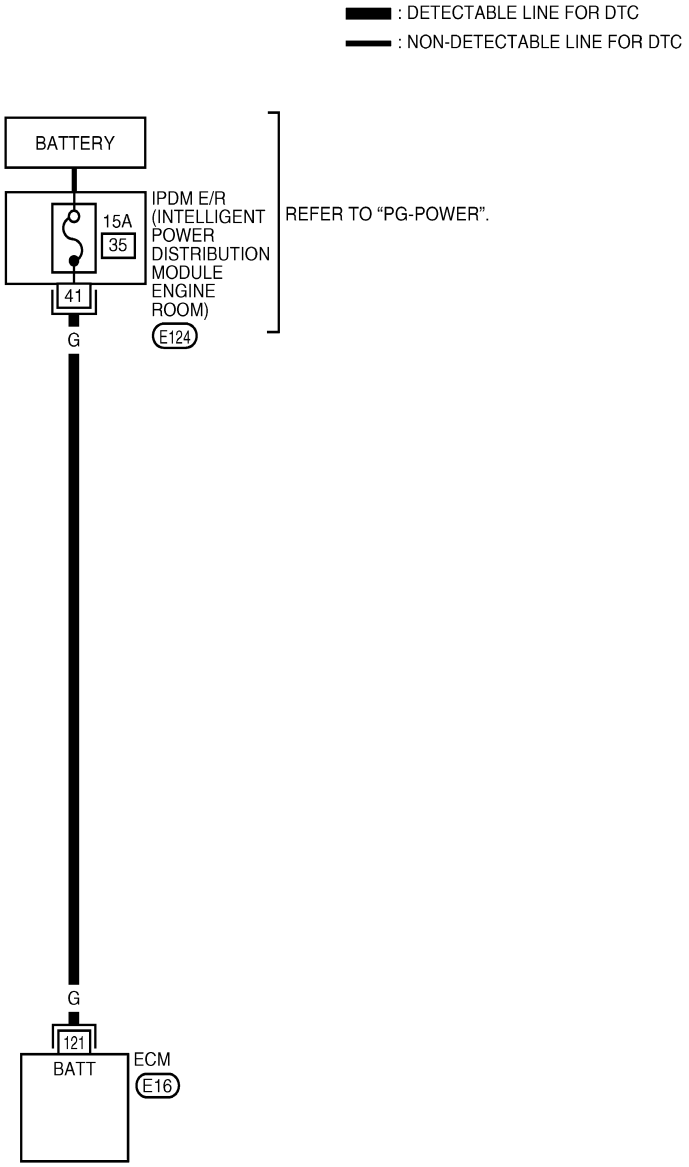

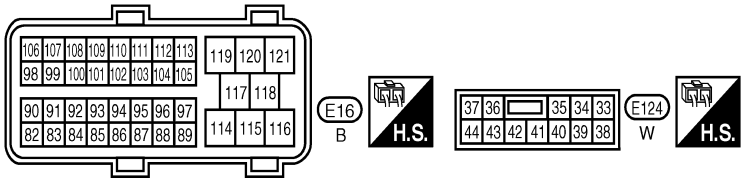

BBWA2524E

Specification data are reference values and are measured between each terminal and ground.

CAUTION:

Do not use ECM ground terminals when measuring input/output voltage. Doing so may result in damage to the ECM's transistor. Use a ground other than ECM terminals, such as the ground.

TERMINAL NO.	WIRE COLOR	ITEM	CONDITION	DATA (DC Voltage)
121	G	Power supply for ECM (Back-up)	**[Ignition switch: OFF]**	BATTERY VOLTAGE (11 - 14V)

Diagnosis Procedure

INFOID:0000000001717556

1. CHECK ECM POWER SUPPLY

1. Turn ignition switch OFF.
2. Disconnect ECM harness connector.
3. Check voltage between ECM terminal 121 and ground with CONSULT-III or tester.

Voltage: Battery voltage

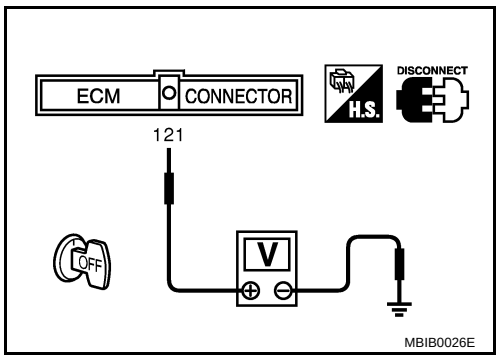

OK or NG

OK >> GO TO 3.
NG >> GO TO 2.

2. DETECT MALFUNCTIONING PART

Check the following.
- IPDM E/R harness connector E124
- 15A fuse
- Harness for open or short between ECM and battery

>> Repair or replace harness or connectors.

3. CHECK INTERMITTENT INCIDENT

Refer to EC-130.

OK or NG

OK >> GO TO 4.
NG >> Repair or replace harness or connectors.

4. PERFORM DTC CONFIRMATION PROCEDURE

With CONSULT-III
1. Turn ignition switch ON.
2. Select “SELF DIAG RESULTS” mode with CONSULT-III.
3. Touch “ERASE”.
4. **Perform DTC Confirmation Procedure.**
   See EC-443, "DTC Confirmation Procedure".
5. Is the 1st trip DTC P0603 displayed again?

With GST
1. Turn ignition switch ON.
2. Select Service $04 with GST.
3. **Perform DTC Confirmation Procedure.**
   See EC-443, "DTC Confirmation Procedure".
4. Is the 1st trip DTC P0603 displayed again?

Yes or No

Yes >> GO TO 5.
No >> **INSPECTION END**

5. REPLACE ECM

1. Replace ECM.
2. Perform initialization of NVIS (NATS) system and registration of all NVIS (NATS) ignition key IDs. Refer to BL-180.
3. Perform EC-72, "VIN Registration".
4. Perform EC-73, "Accelerator Pedal Released Position Learning".
5. Perform EC-73, "Throttle Valve Closed Position Learning".
6. Perform EC-73, "Idle Air Volume Learning".

>> **INSPECTION END**

DTC P0605 ECM

Component Description

INFOID:0000000001717557

The ECM consists of a microcomputer and connectors for signal input and output and for power supply. The ECM controls the engine.

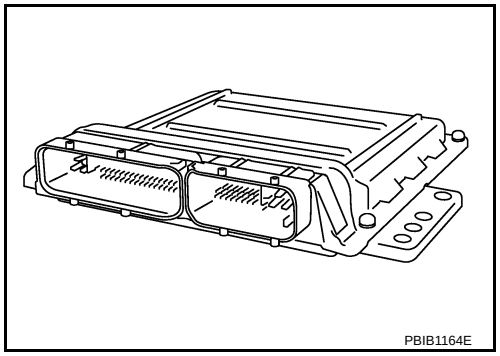

On Board Diagnosis Logic

INFOID:0000000001717558

This self-diagnosis has one or two trip detection logic.

DTC No.	Trouble diagnosis name	DTC detecting condition		Possible cause
P0605 0605	Engine control module	A)	ECM calculation function is malfunctioning.	• ECM
		B)	ECM EEP-ROM system is malfunctioning.	
		C)	ECM self shut-off function is malfunctioning.	

FAIL-SAFE MODE

ECM enters fail-safe mode when the malfunction A is detected.

Detected items	Engine operation condition in fail-safe mode
Malfunction A	• ECM stops the electric throttle control actuator control, throttle valve is maintained at a fixed opening (approx. 5 degrees) by the return spring. • ECM deactivates ASCD operation.

DTC Confirmation Procedure

INFOID:0000000001717559

Perform PROCEDURE FOR MALFUNCTION A first. If the 1st trip DTC cannot be confirmed, perform PROCEDURE FOR MALFUNCTION B. If there is no malfunction on PROCEDURE FOR MALFUNCTION B, perform PROCEDURE FOR MALFUNCTION C.

NOTE:

If DTC Confirmation Procedure has been previously conducted, always perform the following before conducting the next step.

1. Turn ignition switch OFF and wait at least 10 seconds.
2. Turn ignition switch ON.
3. Turn ignition switch OFF and wait at least 10 seconds.

PROCEDURE FOR MALFUNCTION A

1. Turn ignition switch ON.
2. Check 1st trip DTC.
3. If 1st trip DTC is detected, go to EC-448, "Diagnosis Procedure".

PROCEDURE FOR MALFUNCTION B

1. Turn ignition switch ON and wait at least 1 second.
2. Turn ignition switch OFF, wait at least 10 seconds and then turn ON.
3. Check 1st trip DTC.
4. If 1st trip DTC is detected, go to EC-448, "Diagnosis Procedure".

PROCEDURE FOR MALFUNCTION C

1. Turn ignition switch ON and wait at least 1 second.

2. Turn ignition switch OFF, wait at least 10 seconds and then turn ON.
3. Repeat step 2 for 32 times
4. Check 1st trip DTC.
5. If 1st trip DTC is detected, go to EC-448, "Diagnosis Procedure".

Diagnosis Procedure

INFOID:0000000001717560

1. INSPECTION START

With CONSULT-III

1. Turn ignition switch ON.
2. Select “SELF DIAG RESULTS” mode with CONSULT-III.
3. Touch “ERASE”.
4. **Perform DTC Confirmation Procedure.**
   See EC-447, "DTC Confirmation Procedure".
5. Is the 1st trip DTC P0605 displayed again?

With GST

1. Turn ignition switch ON.
2. Select Service $04 with GST.
3. **Perform DTC Confirmation Procedure.**
   See EC-447, "DTC Confirmation Procedure".
4. Is the 1st trip DTC P0605 displayed again?

Yes or No

Yes >> GO TO 2.
No >> **INSPECTION END**

2. REPLACE ECM

1. Replace ECM.
2. Perform initialization of NVIS (NATS) system and registration of all NVIS (NATS) ignition key IDs. Refer to BL-180.
3. Perform EC-72, "VIN Registration".
4. Perform EC-73, "Accelerator Pedal Released Position Learning".
5. Perform EC-73, "Throttle Valve Closed Position Learning".
6. Perform EC-73, "Idle Air Volume Learning".

>> **INSPECTION END**

DTC P0643 SENSOR POWER SUPPLY

On Board Diagnosis Logic

INFOID:0000000001717561

This self-diagnosis has the one trip detection logic.

DTC No.	Trouble diagnosis name	DTC detecting condition	Possible cause
P0643 0643	Sensor power supply circuit short	ECM detects a voltage of power source for sensor is excessively low or high.	• Harness or connectors (APP sensor 1 circuit is shorted.) (PSP sensor circuit is shorted.) (EVAP control system pressure sensor is shorted.) (Refrigerant pressure sensor circuit is shorted.) • Accelerator pedal position sensor (APP sensor 1) • Power steering pressure sensor • EVAP control system pressure sensor • Refrigerant pressure sensor

FAIL-SAFE MODE

When the malfunction is detected, ECM enters fail-safe mode and the MIL lights up.

Engine operation condition in fail-safe mode
ECM stops the electric throttle control actuator control, throttle valve is maintained at a fixed opening (approx. 5 degrees) by the return spring.

DTC Confirmation Procedure

INFOID:0000000001717562

NOTE:
If DTC Confirmation Procedure has been previously conducted, always perform the following before conducting the next step.
1. Turn ignition switch OFF and wait at least 10 seconds.
2. Turn ignition switch ON.
3. Turn ignition switch OFF and wait at least 10 seconds.

TESTING CONDITION:
Before performing the following procedure, confirm that battery voltage is more than 10V at idle.

1. Start engine and let it idle for 1 second.
2. Check DTC.
3. If DTC is detected, go to EC-451, "Diagnosis Procedure".

Wiring Diagram

INFOID:0000000001717563

EC-SEN/PW-01

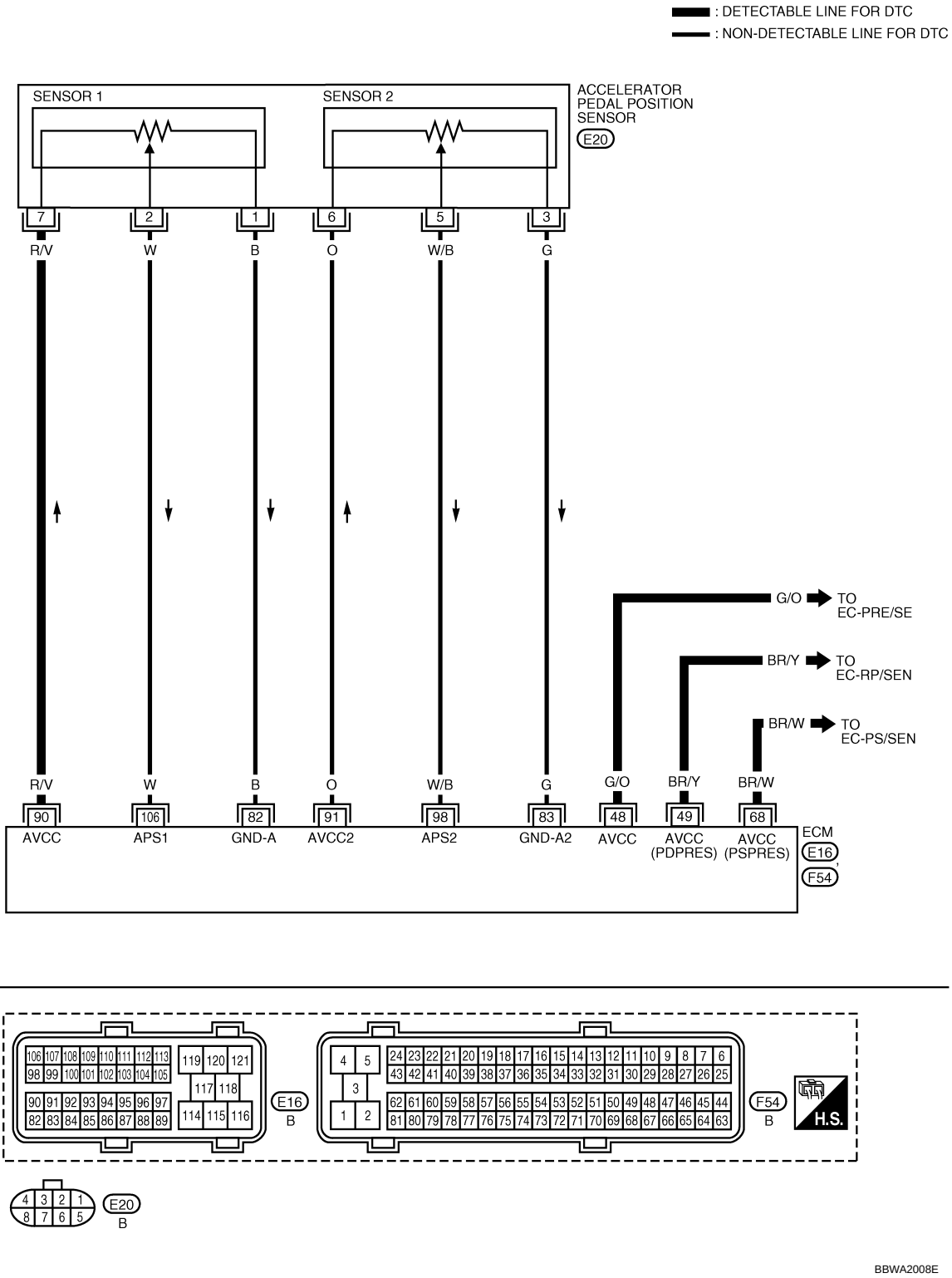

Specification data are reference values and are measured between each terminal and ground.

CAUTION:

Do not use ECM ground terminals when measuring input/output voltage. Doing so may result in damage to the ECM's transistor. Use a ground other than ECM terminals, such as the ground.

TER-MI-NAL NO.	WIRE COLOR	ITEM	CONDITION	DATA (DC Voltage)
48	G/O	EVAP control system pressure sensor power supply	**[Ignition switch: ON]**	Approximately 5V
49	BR/Y	Refrigerant pressure sensor power supply	**[Ignition switch: ON]**	Approximately 5V
68	BR/W	PSP sensor power supply	**[Ignition switch: ON]**	Approximately 5V
82	B	APP sensor 1 ground	**[Engine is running]** • **Warm-up condition** • Idle speed	Approximately 0V
83	G	APP sensor 2 ground	**[Engine is running]** • **Warm-up condition** • Idle speed	Approximately 0V
90	R/V	APP sensor 1 power supply	**[Ignition switch: ON]**	Approximately 5V
91	O	APP sensor 2 power supply	**[Ignition switch: ON]**	Approximately 5V
98	W/B	Accelerator pedal position sensor 2	**[Ignition switch: ON]** • Engine stopped • Accelerator pedal: Fully released	0.25 - 0.5V
			[Ignition switch: ON] • Engine stopped • Accelerator pedal: Fully depressed	2.0 - 2.5V
106	W	Accelerator pedal position sensor 1	**[Ignition switch: ON]** • Engine stopped • Accelerator pedal: Fully released	0.5 - 1.0V
			[Ignition switch: ON] • Engine stopped • Accelerator pedal: Fully depressed	4.2 - 4.8V

Diagnosis Procedure

INFOID:0000000001717564

1. CHECK GROUND CONNECTIONS

1. Turn ignition switch OFF.
2. Loosen and retighten three ground screws on the body. Refer to EC-138, "Ground Inspection".

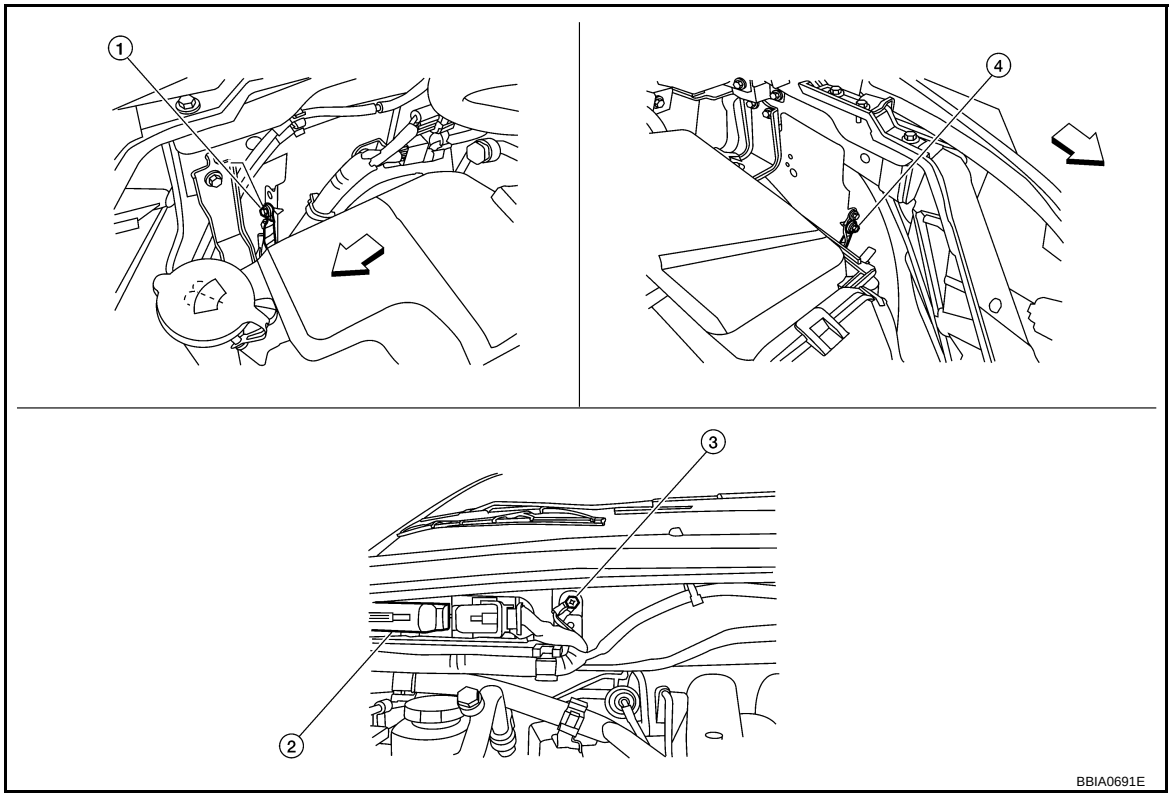

⇦: Vehicle front

1. Body ground E24
2. ECM
3. Body ground E9
4. Body ground E15

OK or NG

OK >> GO TO 2.
NG >> Repair or replace ground connections.

2. CHECK ACCELERATOR PEDAL POSITION SENSOR 1 POWER SUPPLY CIRCUIT-I

1. Disconnect accelerator pedal position (APP) sensor harness connector.
2. Turn ignition switch ON.

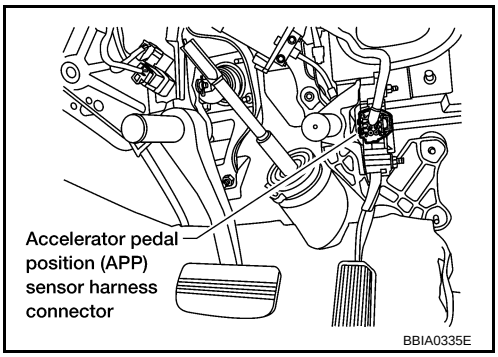

3. Check voltage between APP sensor terminal 7 and ground with CONSULT-III or tester.

Voltage: Approximately 5V

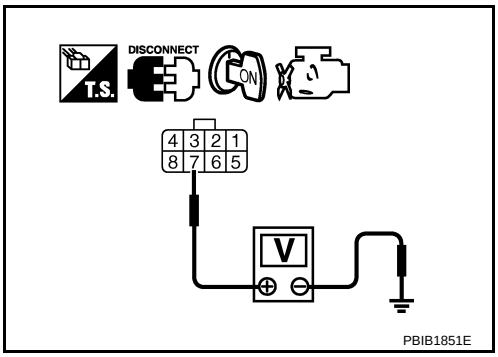

OK or NG

OK >> GO TO 6.
NG >> GO TO 3.

3. CHECK ACCELERATOR PEDAL POSITION SENSOR 1 POWER SUPPLY CIRCUIT-II

1. Turn ignition switch OFF.
2. Disconnect ECM harness connector.
3. Check harness continuity between APP sensor terminal 7 and ECM terminal 90. Refer to Wiring Diagram.

Continuity should exist.

OK or NG

OK >> GO TO 4.
NG >> Repair open circuit.

4. CHECK SENSOR POWER SUPPLY CIRCUITS

Check harness for short to power and short to ground, between the following terminals.

ECM terminal	Sensor terminal	Reference Wiring Diagram
90	APP sensor terminal 7	EC-450
48	EVAP control system pressure sensor terminal 3	EC-401
49	Refrigerant pressure sensor terminal 1	EC-604
68	PSP sensor terminal 3	EC-439

OK or NG

OK >> GO TO 5.
NG >> Repair short to ground or short to power in harness or connectors.

5. CHECK COMPONENTS

Check the following.
- EVAP control system pressure sensor (Refer to EC-404, "Component Inspection".)
- Refrigerant pressure sensor (Refer to MTC-27).
- Power steering pressure sensor (Refer to EC-442, "Component Inspection".)

OK or NG

OK >> GO TO 8.
NG >> Replace malfunctioning component.

6. CHECK APP SENSOR

Refer to EC-532, "Component Inspection".

OK or NG

OK >> GO TO 8.
NG >> GO TO 7.

7. REPLACE ACCELERATOR PEDAL ASSEMBLY

1. Replace accelerator pedal assembly.
2. Perform EC-73, "Accelerator Pedal Released Position Learning".
3. Perform EC-73, "Throttle Valve Closed Position Learning".
4. Perform EC-73, "Idle Air Volume Learning".

>> **INSPECTION END**

8. CHECK INTERMITTENT INCIDENT

Refer to EC-130.

>> **INSPECTION END**

DTC P0850 PNP SWITCH

Component Description

INFOID:0000000001717565

When the shift position is P or N, park/neutral position (PNP) switch is turned ON.
ECM detects the position because the continuity of the line (the ON signal) exists.
The park/neutral position (PNP) switch assembly also indicates a transmission range switch to detect shift lever position.

CONSULT-III Reference Value in Data Monitor Mode

INFOID:0000000001717566

Specification data are reference values.

MONITOR ITEM	CONDITION		SPECIFICATION
P/N POSI SW	• Ignition switch: ON	Shift lever: P or N	ON
		Shift lever: Except above	OFF

On Board Diagnosis Logic

INFOID:0000000001717567

DTC No.	Trouble diagnosis name	DTC detecting condition	Possible cause
P0850 0850	Park/neutral position switch	The signal of the park/neutral position (PNP) switch is not changed in the process of engine starting and driving.	• Harness or connectors [The park/neutral position (PNP) switch circuit is open or shorted.] • Park/neutral position (PNP) switch

DTC Confirmation Procedure

INFOID:0000000001717568

CAUTION:
Always drive vehicle at a safe speed.
NOTE:
If DTC Confirmation Procedure has been previously conducted, always perform the following before conducting the next step.
1. Turn ignition switch OFF and wait at least 10 seconds.
2. Turn ignition switch ON.
3. Turn ignition switch OFF and wait at least 10 seconds.

WITH CONSULT-III

1. Turn ignition switch ON.
2. Select “P/N POSI SW” in “DATA MONITOR” mode with CONSULT-III. Then check the “P/N POSI SW” signal under the following conditions.

Position (Selector lever)	Known-good signal
P or N position	ON
Except above position	OFF

If NG, go to EC-457, "Diagnosis Procedure".
If OK, go to following step.

3. Select “DATA MONITOR” mode with CONSULT-III.
4. Start engine and warm it up to normal operating temperature.
5. Maintain the following conditions for at least 60 consecutive seconds.

ENG SPEED	1,200 - 6,375 rpm
COOLAN TEMP/S	More than 70°C (158°F)
B/FUEL SCHDL	2.0 - 31.8 msec
VHCL SPEED SE	More than 64 km/h (40 MPH)
Shift lever	Suitable position

6. Check 1st trip DTC.
7. If 1st trip DTC is detected, go to EC-457, "Diagnosis Procedure".

Overall Function Check

INFOID:0000000001717569

Use this procedure to check the overall function of the park/neutral position (PNP) switch circuit. During this check, a 1st trip DTC might not be confirmed.

WITH GST

1. Turn ignition switch ON.
2. Check voltage between ECM terminal 102 (PNP switch signal) and ground under the following conditions.

Condition (Gear position)	Voltage V (Known-good data)
P or N position	Approx. 0
Except above position	BATTERY VOLTAGE (11 - 14V)

3. If NG, go to EC-457, "Diagnosis Procedure".

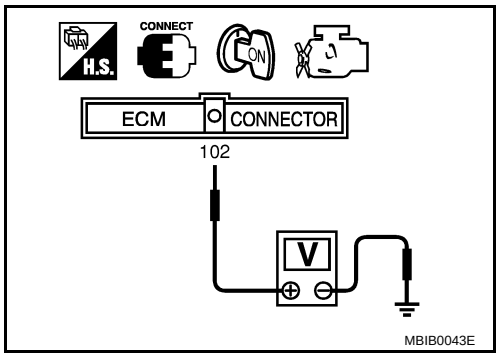

Wiring Diagram

INFOID:0000000001717570

EC-PNP/SW-01

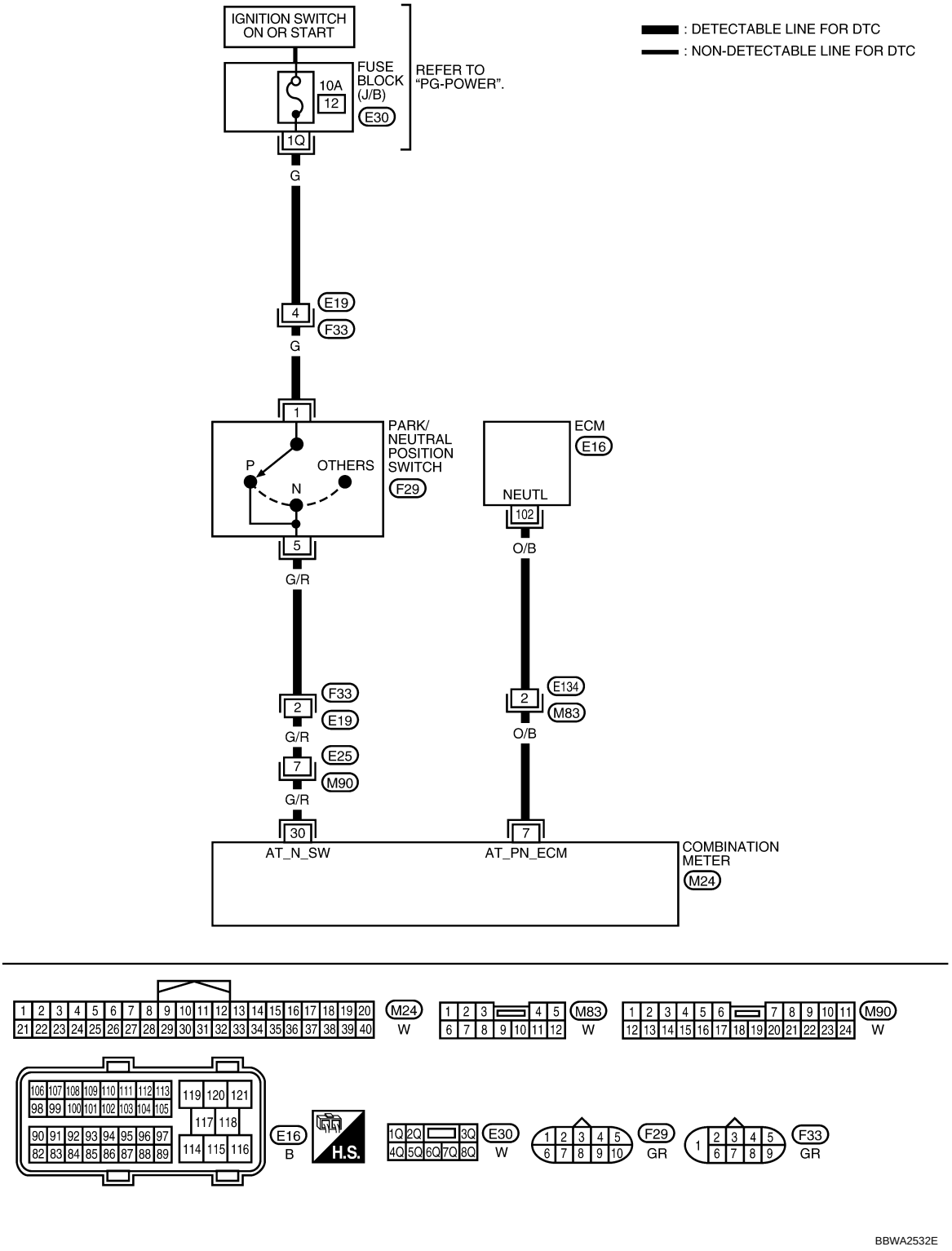

Specification data are reference values and are measured between each terminal and ground.

CAUTION:

Do not use ECM ground terminals when measuring input/output voltage. Doing so may result in damage to the ECM's transistor. Use a ground other than ECM terminals, such as the ground.

TERMINAL NO.	WIRE COLOR	ITEM	CONDITION	DATA (DC Voltage)
102	O/B	PNP switch	**[Ignition switch: ON]** • Shift lever: P or N	BATTERY VOLTAGE (11 - 14V)
			[Ignition switch: ON] • Except above position	Approximately 0V

Diagnosis Procedure

INFOID:0000000001717571

1. CHECK STARTING SYSTEM

Turn ignition switch OFF, then turn it to START.
Does starter motor operate?

Yes or No

Yes >> GO TO 2.
No >> Refer to SC-10.

2. CHECK PNP SWITCH INPUT SIGNAL CIRCUIT FOR OPEN AND SHORT-I

1. Turn ignition switch OFF, wait at least 10 seconds and then turn ON.
2. Check voltage between combination meter terminal 30 and ground with CONSULT-III or tester under the following conditions.

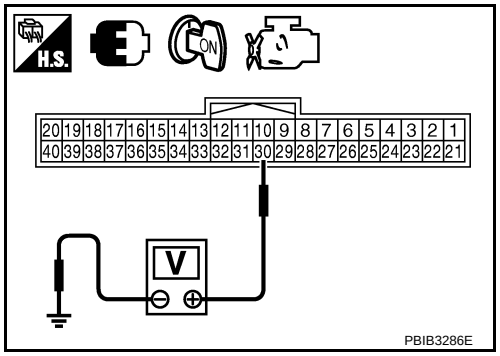

Condition (Shift position)	Voltage
P or N position	BATTERY VOLTAGE (11 - 14V)
Except above position	Approximately 0 V

OK or NG

OK >> GO TO 9.
NG >> GO TO 3.

3. CHECK PNP SWITCH POWER SUPPLY CIRCUIT

1. Turn ignition switch OFF.
2. Disconnect PNP switch harness connector (1).
- ⇦: Vehicle front
3. Turn ignition switch ON.

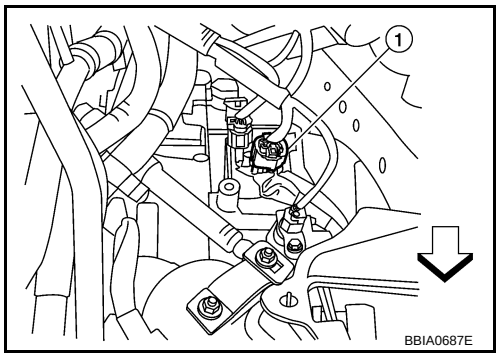

4. Check voltage between PNP switch terminal 1 and ground with CONSULT-III or tester.
   Refer to Wiring Diagram.

   Voltage: Battery voltage

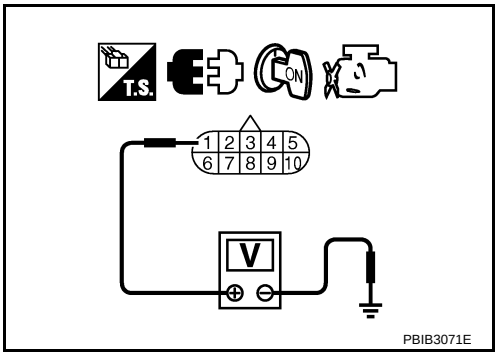

OK or NG

OK >> GO TO 5.
NG >> GO TO 4.

4. DETECT MALFUNCTIONING PART

Check the following.
- Harness connectors E19, F33
- Fuse block (J/B) connector E30
- 10A fuse
- Harness for open or short between PNP switch and fuse

>> Repair open circuit or short to ground or short to power in harness or connectors.

5. CHECK PNP SWITCH INPUT SIGNAL CIRCUIT FOR OPEN AND SHORT-I

1. Check harness continuity between PNP switch terminal 5 and combination meter terminal 30.
   Refer to Wiring Diagram.

   Continuity should exist.

2. Also check harness for short to ground and short to power.

OK or NG

OK >> GO TO 7.
NG >> GO TO 6.

6. DETECT MALFUNCTIONING PART

Check the following.
- Harness connectors F33, E19
- Harness connectors E25, M90
- Harness for open or short between PNP switch and combination meter

>> Repair open circuit or short to ground or short to power in harness or connectors.

7. CHECK PNP SWITCH

Refer to AT-83.

OK or NG

OK >> GO TO 8.
NG >> Replace PNP switch.

8. CHECK INTERMITTENT INCIDENT

Refer to EC-130.

>> **INSPECTION END**

9. CHECK PNP SWITCH INPUT SIGNAL CIRCUIT FOR OPEN AND SHORT-II

1. Turn ignition switch OFF.
2. Disconnect ECM harness connector.
3. Check harness continuity between ECM terminal 102 and combination meter terminal 7.
   Refer to Wiring Diagram.

   Continuity should exist.

4. Also check harness for short to ground and short to power.

OK or NG

OK >> GO TO 11.
NG >> GO TO 10.

10. DETECT MALFUNCTIONING PART

Check the following.
- Harness connectors E134, M83
- Harness for open or short between ECM and combination meter

>> Repair open circuit or short to ground or short to power in harness or connectors.

11. CHECK CONBINATION METER

Refer to DI-5.

OK or NG

OK >> GO TO 12.
NG >> Replace combination meter

12. CHECK INTERMITTENT INCIDENT

Refer to EC-130.

>> **INSPECTION END**

DTC P1148, P1168 CLOSED LOOP CONTROL

On Board Diagnosis Logic

INFOID:0000000001717572

These self-diagnoses have the one trip detection logic.

DTC No.	Trouble diagnosis name	DTC detecting condition	Possible cause
P1148 1148 (Bank 1)	Closed loop control function	The closed loop control function for bank 1 does not operate even when vehicle is driving in the specified condition.	• Harness or connectors [The air fuel ratio (A/F) sensor 1 circuit is open or shorted.] • Air fuel ratio (A/F) sensor 1 • Air fuel ratio (A/F) sensor 1 heater
P1168 1168 (Bank 2)		The closed loop control function for bank 2 does not operate even when vehicle is driving in the specified condition.	

NOTE:
DTC P1148 or P1168 is displayed with another DTC for air fuel ratio (A/F) sensor 1.
Perform the trouble diagnosis for the corresponding DTC.

DTC P1211 TCS CONTROL UNIT

Description

INFOID:0000000001717573

The malfunction information related to TCS is transferred through the CAN communication line from “ABS actuator and electric unit (control unit)” to ECM.
Be sure to erase the malfunction information such as DTC not only for “ABS actuator and electric unit (control unit)” but also for ECM after TCS related repair.

On Board Diagnosis Logic

INFOID:0000000001717574

Freeze frame data is not stored in the ECM for this self-diagnosis.
The MIL will not light up for this self-diagnosis.

DTC No.	Trouble diagnosis name	DTC detecting condition	Possible cause
P1211 1211	TCS control unit	ECM receives a malfunction information from “ABS actuator and electric unit (control unit)”.	• ABS actuator and electric unit (control unit) • TCS related parts

DTC Confirmation Procedure

INFOID:0000000001717575

TESTING CONDITION:
Before performing the following procedure, confirm that battery voltage is more than 10.5V at idle.

1. Start engine and let it idle for at least 60 seconds.
2. Check 1st trip DTC.
3. If 1st trip DTC is detected, go to EC-461, "Diagnosis Procedure".

Diagnosis Procedure

INFOID:0000000001717576

Go to BRC-10 or BRC-50.

DTC P1212 TCS COMMUNICATION LINE

Description

INFOID:0000000001717577

NOTE:
- **If DTC P1212 is displayed with DTC U1000 or U1001, first perform the trouble diagnosis for DTC U1000, U1001. Refer to EC-139.**
- **If DTC P1212 is displayed with DTC U1010, first perform the trouble diagnosis for DTC U1010. Refer to EC-141.**

This CAN communication line is used to control the smooth engine operation during the TCS operation. Pulse signals are exchanged between ECM and “ABS actuator and electric unit (control unit)”.
Be sure to erase the malfunction information such as DTC not only for “ABS actuator and electric unit (control unit)” but also for ECM after TCS related repair.

On Board Diagnosis Logic

INFOID:0000000001717578

The MIL will not light up for this self-diagnosis.
Freeze frame data is not stored in the ECM for this self-diagnosis.

DTC No.	Trouble diagnosis name	DTC detecting condition	Possible cause
P1212 1212	TCS communication line	ECM can not receive the information from “ABS actuator and electric unit (control unit)” continuously.	• Harness or connectors (The CAN communication line is open or shorted.) • ABS actuator and electric unit (control unit). • Dead (Weak) battery

DTC Confirmation Procedure

INFOID:0000000001717579

TESTING CONDITION:
Before performing the following procedure, confirm that battery voltage is more than 10.5V at idle.

1. Start engine and let it idle for at least 10 seconds.
2. Check 1st trip DTC.
3. If 1st trip DTC is detected, go to EC-462, "Diagnosis Procedure".

Diagnosis Procedure

INFOID:0000000001717580

Go to BRC-10 or BRC-50.

DTC P1217 ENGINE OVER TEMPERATURE

Description

INFOID:0000000001717581

SYSTEM DESCRIPTION

NOTE:

- **If DTC P1217 is displayed with DTC U1000 or U1001, first perform the trouble diagnosis for DTC U1000, U1001. Refer to EC-139.**
- **If DTC P1217 is displayed with DTC U1010, first perform the trouble diagnosis for DTC U1010. Refer to EC-141.**

Cooling Fan Control

Sensor	Input Signal to ECM	ECM function	Actuator
Crankshaft position sensor (POS) Camshaft position sensor (PHASE)	Engine speed*1	Cooling fan control	IPDM E/R (Cooling fan relay)
Battery	Battery voltage*1		
Wheel sensor	Vehicle speed*2		
Engine coolant temperature sensor	Engine coolant temperature		
Air conditioner switch	Air conditioner ON signal*2		
Refrigerant pressure sensor	Refrigerant pressure		

*1: The ECM determines the start signal status by the signals of engine speed and battery voltage.

*2: This signal is sent to ECM through CAN communication line.

The ECM controls the cooling fan corresponding to the vehicle speed, engine coolant temperature, refrigerant pressure, and air conditioner ON signal. The control system has 4-step control [HIGH/MIDDLE/LOW/OFF].

Cooling Fan Operation

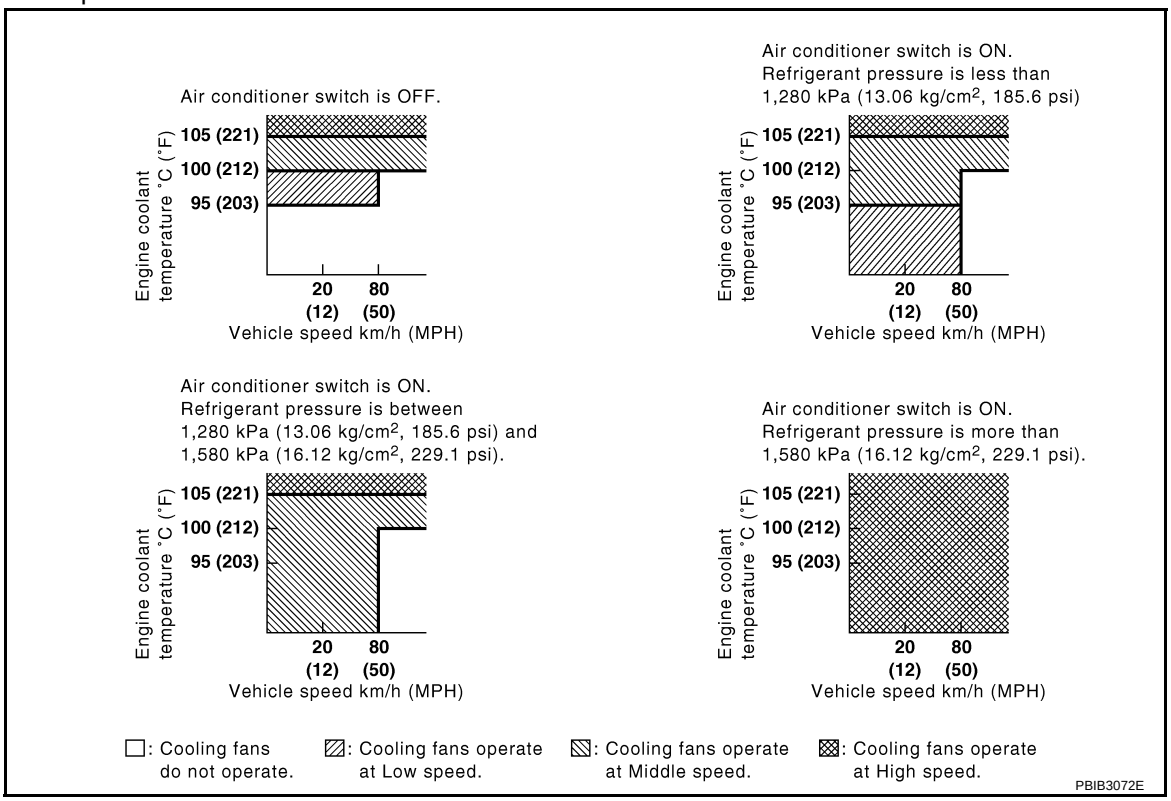

Cooling Fan Relay Operation

The ECM controls cooling fan relays in the IPDM E/R through CAN communication line.

Cooling fan speed	Cooling fan relay		
	1	2	3
Stop (OFF)	OFF	OFF	OFF
Low (LOW)	OFF	ON	OFF
Middle (MID)	ON	OFF	OFF
High (HI)	ON	OFF	ON

COMPONENT DESCRIPTION

Cooling Fan Motor
The cooling fan operates at each speed when the current flows in the cooling fan motor as follows.

Cooling fan speed	Cooling fan motor terminals	
	(+)	(–)
Middle (MID)	1	3 and 4
	2	3 and 4
	1 and 2	3
	1 and 2	4
High (HI)	1 and 2	3 and 4

The cooling fan operates at low (LOW) speed when cooling fan motors-1 and -2 are circuited in series under middle speed condition.

CONSULT-III Reference Value in Data Monitor Mode

INFOID:0000000001717582

Specification data are reference values.

MONITOR ITEM	CONDITION		SPECIFICATION
AIR COND SIG	• Engine: After warming up, idle the engine	Air conditioner switch: OFF	OFF
		Air conditioner switch: ON (Compressor operates.)	ON
COOLING FAN	• Engine: After warming up, idle the engine • Air conditioner switch: OFF	Engine coolant temperature: 94°C (201°F) or less	OFF
		Engine coolant temperature: Between 95°C (203°F) and 99°C (210°F)	LOW
		Engine coolant temperature: Between 100°C (212°F) and 104°C (219°F)	MID
		Engine coolant temperature: 105°C (221°F) or more	HI

On Board Diagnosis Logic

INFOID:0000000001717583

If the cooling fan or another component in the cooling system malfunctions, engine coolant temperature will rise.
When the engine coolant temperature reaches an abnormally high temperature condition, a malfunction is indicated.
This self-diagnosis has the one trip detection logic.

DTC No.	Trouble diagnosis name	DTC detecting condition	Possible cause
P1217 1217	Engine over temperature (Overheat)	• Cooling fan does not operate properly (Overheat). • Cooling fan system does not operate properly (Overheat). • Engine coolant was not added to the system using the proper filling method. • Engine coolant is not within the specified range.	• Harness or connectors (The cooling fan circuit is open or shorted.) • IPDM E/R (Cooling fan relay) • Cooling fan • Radiator hose • Radiator • Radiator cap • Water pump • Thermostat For more information, refer to EC-471, "Main 12 Causes of Overheating".

CAUTION:
When a malfunction is indicated, be sure to replace the coolant. Refer to CO-11, "Changing Engine Coolant". Also, replace the engine oil. Refer to LU-9, "Changing Engine Oil".
1. **Fill radiator with coolant up to specified level with a filling speed of 2 liters per minute. Be sure to use coolant with the proper mixture ratio. Refer to MA-11, "Engine Oil Recommendation".**
2. **After refilling coolant, run engine to ensure that no water-flow noise is emitted.**

Overall Function Check

INFOID:0000000001717584

Use this procedure to check the overall function of the cooling fan. During this check, a DTC might not be confirmed.

WARNING:
Never remove the radiator cap when the engine is hot. Serious burns could be caused by high pressure fluid escaping from the radiator.
Wrap a thick cloth around cap. Carefully remove the cap by turning it a quarter turn to allow built-up pressure to escape. Then turn the cap all the way off.

WITH CONSULT-III

1. Check the coolant level in the reservoir tank and radiator.
   Allow engine to cool before checking coolant level.
   If the coolant level in the reservoir tank and/or radiator is below the proper range, skip the following steps and go to EC-467, "Diagnosis Procedure".
2. Confirm whether customer filled the coolant or not. If customer filled the coolant, skip the following steps and go to EC-467, "Diagnosis Procedure".
3. Turn ignition switch ON.
4. Perform “COOLING FAN” in “ACTIVE TEST” mode with CONSULT-III.
5. If the results are NG, go to EC-467, "Diagnosis Procedure".

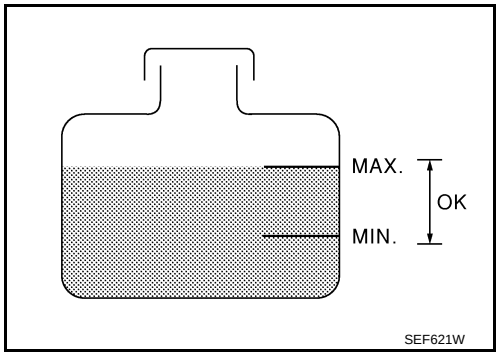

WITH GST

1. Check the coolant level in the reservoir tank and radiator.
   Allow engine to cool before checking coolant level.
   If the coolant level in the reservoir tank and/or radiator is below the proper range, skip the following steps and go to EC-467, "Diagnosis Procedure".
2. Confirm whether customer filled the coolant or not. If customer filled the coolant, skip the following steps and go to EC-467, "Diagnosis Procedure".
3. Perform IPDM E/R auto active test and check cooling fan motors operation, refer to PG-20, "Auto Active Test".
4. If NG, go to EC-467, "Diagnosis Procedure".

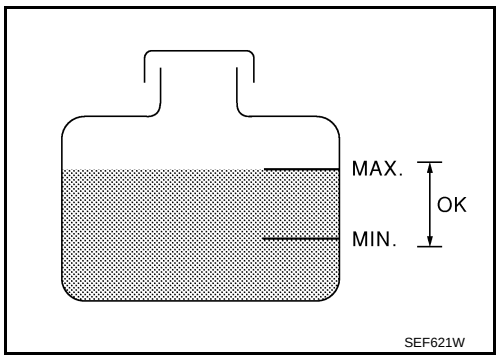

Wiring Diagram

INFOID:0000000001717585

EC-COOL/F-01

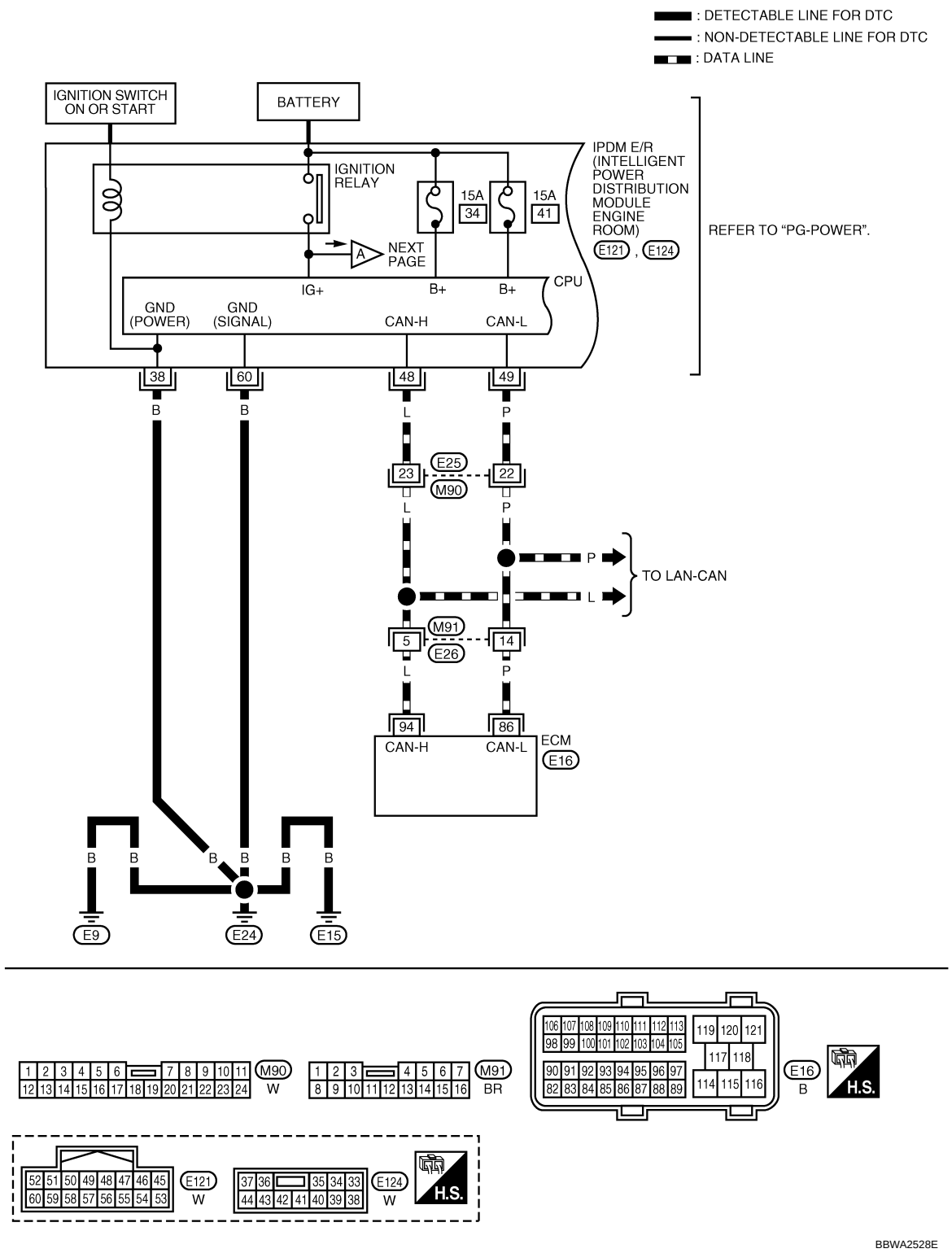

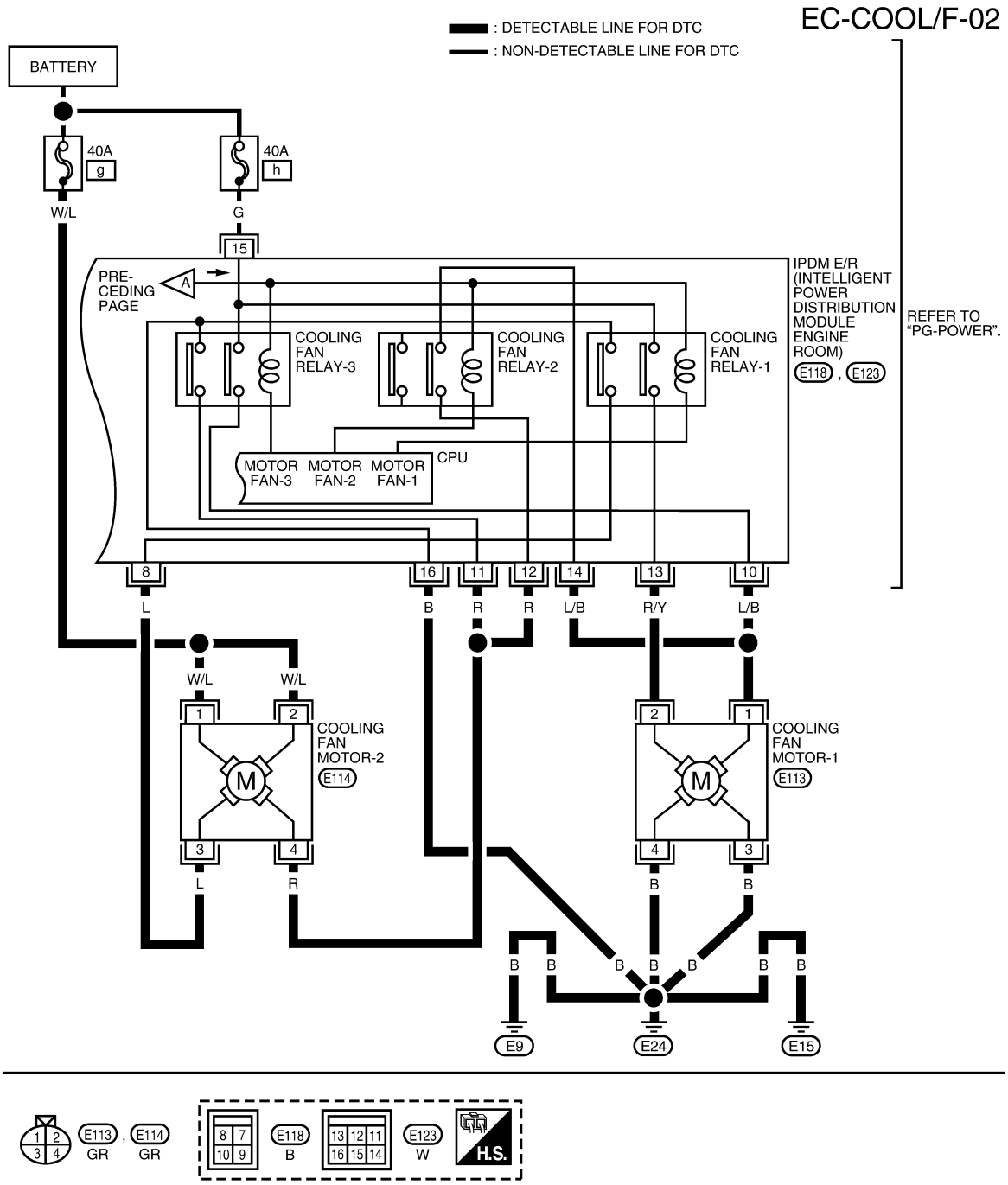

BBWA2529E

Diagnosis Procedure

INFOID:0000000001717586

1. INSPECTION START

Do you have CONSULT-III?

Yes or No

Yes >> GO TO 2.
No >> GO TO 3.

2. CHECK COOLING FAN OPERATION

With CONSULT-III

1. Start engine and let it idle.
2. Select “COOLING FAN” in “ACTIVE TEST” mode with CONSULT-III.
3. Make sure that cooling fans-1 and -2 operate at each speed (LOW/MID/HI).

OK or NG

OK >> GO TO 4.
NG >> Check cooling fan control circuit. (Go to “COOLING FAN CONTROL CIRCUIT”.)

3. CHECK COOLING FAN OPERATION

Without CONSULT-III

1. Perform IPDM E/R auto active test and check cooling fan motors operation, refer to PG-20, "Auto Active Test".
2. Make sure that cooling fans-1 and -2 operate at each speed (Low/Middle/High).

OK or NG

OK >> GO TO 4.
NG >> Check cooling fan control circuit. (Go to “COOLING FAN CONTROL CIRCUIT”.)

4. CHECK COOLING SYSTEM FOR LEAK

CO-10, "System Inspection"

OK or NG

OK >> GO TO 5.
NG >> Check the following for leak. Refer to CO-10, "System Inspection".
- Hose
- Radiator
- Water pump

5. CHECK RADIATOR CAP

CO-10, "System Inspection"

OK or NG

OK >> GO TO 6.
NG >> Replace radiator cap.

6. CHECK COMPONENT PARTS

Check the following.
Thermostat. Refer to CO-24.
Engine coolant temperature sensor. Refer to EC-201, "Component Inspection".

OK or NG

OK >> GO TO 7.
NG >> Replace engine coolant temperature sensor.

7. CHECK MAIN 12 CAUSES

If the cause cannot be isolated, go to EC-471, "Main 12 Causes of Overheating".

>> **INSPECTION END**

COOLING FAN CONTROL CIRCUIT

1. CHECK IPDM E/R POWER SUPPLY CIRCUIT

1. Turn ignition switch OFF.
2. Disconnect IPDM E/R harness connector E123.

3. Check voltage between IPDM E/R terminal 15 and ground with CONSULT-III or tester.

Voltage: Battery voltage

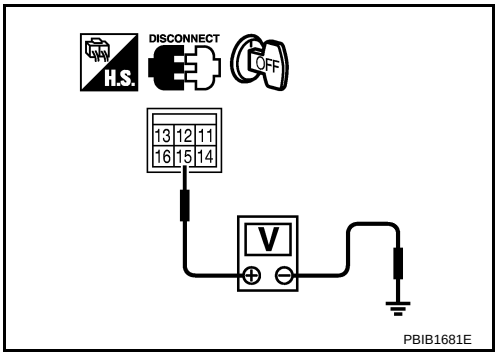

OK or NG

OK >> GO TO 3.
NG >> GO TO 2.

2. DETECT MALFUNCTIONING PART

Check the following.
- 40A fusible link
- Harness for open or short between IPDM E/R and battery

>> Repair open circuit or short to ground or short to power in harness or connectors.

3. CHECK IPDM E/R GROUND CIRCUIT FOR OPEN AND SHORT

1. Disconnect IPDM E/R harness connector E121, E123 and E124.
2. Check harness continuity between IPDM E/R terminal 16, 38, 60 and ground. Refer to Wiring Diagram.

Continuity should exist.

3. Also check harness for short to power.

OK or NG

OK >> GO TO 4.
NG >> Repair open circuit or short to power in harness or connectors.

4. CHECK COOLING FAN MOTOR-2 CIRCUIT FOR OPEN AND SHORT-I

1. Disconnect cooling fan motor-2 harness connector.

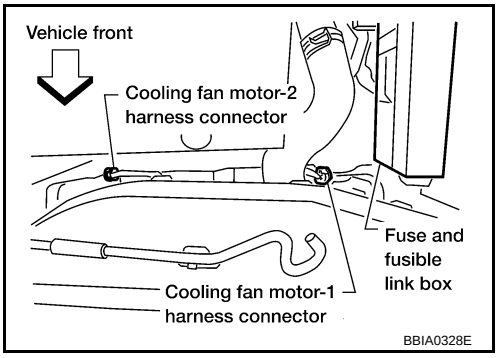

2. Check voltage between cooling fan motor-2 terminals 1, 2 and ground with CONSULT-III or tester.

Voltage: Battery voltage

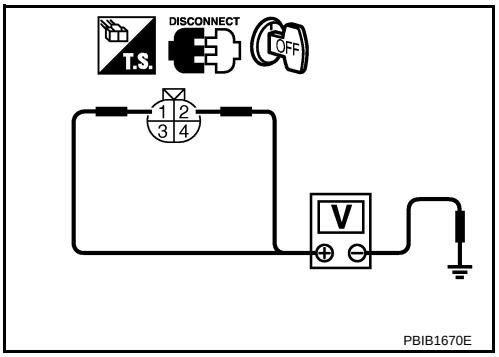

OK or NG

OK >> GO TO 6.
NG >> GO TO 5.

5. DETECT MALFUNCTIONING PART

Check the following.
- 40A fusible link

- Harness for open or short between cooling fan motor-2 and battery

>> Repair open circuit or short to ground or short to power in harness or connectors.

6. CHECK COOLING FAN MOTOR-2 CIRCUIT FOR OPEN AND SHORT-II

1. Disconnect IPDM E/R harness connector E118.
2. Check harness continuity between the following terminals.
   Cooling fan motor-2 terminal 3 and IPDM E/R terminal 8,
   Cooling fan motor-2 terminal 4 and IPDM E/R terminals 11, 12.
   Refer to Wiring Diagram.

Continuity should exist.

3. Also check harness for short to ground and short to power.

OK or NG

OK >> GO TO 7.
NG >> Repair open circuit or short to ground or short to power in harness or connectors.

7. CHECK COOLING FAN MOTOR-1 CIRCUIT FOR OPEN AND SHORT-I

1. Disconnect cooling fan motor-1 harness connector.
2. Check harness continuity between cooling fan motor-1 terminals 3, 4 and ground.
   Refer to Wiring diagram.

Continuity should exist.

3. Also check harness for short to power.

OK or NG

OK >> GO TO 8.
NG >> Repair open circuit or short to power in harness or connectors.

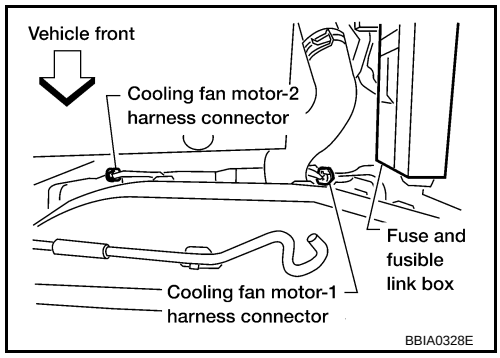

8. CHECK COOLING FAN MOTOR-1 CIRCUIT FOR OPEN AND SHORT-II

1. Check harness continuity between the following terminals.
   Cooling fan motor-1 terminal 1 and IPDM E/R terminal 10, 14,
   Cooling fan motor-1 terminal 2 and IPDM E/R terminal 13.
   Refer to Wiring Diagram.

Continuity should exist.

2. Also check harness for short to ground and short to power.

OK or NG

OK >> GO TO 9.
NG >> Repair open circuit or short to ground or short to power in harness or connectors.

9. CHECK COOLING FAN MOTORS

Refer to EC-471, "Component Inspection".

OK or NG

OK >> GO TO 10.
NG >> Replace cooling fan motors.

10. CHECK INTERMITTENT INCIDENT

Perform EC-130.

OK or NG

OK >> Replace IPDM E/R. Refer to PG-17.
NG >> Repair or replace harness or connector.

Main 12 Causes of Overheating

INFOID:0000000001717587

Engine	Step	Inspection item	Equipment	Standard	Reference page
OFF	1	• Blocked radiator • Blocked condenser • Blocked radiator grille • Blocked bumper	• Visual	No blocking	—
	2	• Coolant mixture	• Coolant tester	50 - 50% coolant mixture	MA-11
	3	• Coolant level	• Visual	Coolant up to MAX level in reservoir tank and radiator filler neck	CO-10
	4	• Radiator cap	• Pressure tester	59 - 98 kPa (0.6 - 1.0 kg/cm^2, 9 - 14 psi) (Limit)	CO-16
ON*2	5	• Coolant leaks	• Visual	No leaks	CO-10
ON*2	6	• Thermostat	• Touch the upper and lower radiator hoses	Both hoses should be hot	CO-24
ON*1	7	• Cooling fan	• CONSULT-III	Operating	See trouble diagnosis for DTC P1217 (EC-463).
OFF	8	• Combustion gas leak	• Color checker chemical tester 4 Gas analyzer	Negative	—
ON*3	9	• Coolant temperature gauge	• Visual	Gauge less than 3/4 when driving	—
		• Coolant overflow to reservoir tank	• Visual	No overflow during driving and idling	CO-10
OFF*4	10	• Coolant return from reservoir tank to radiator	• Visual	Should be initial level in reservoir tank	CO-10
OFF	11	• Cylinder head	• Straight gauge feeler gauge	0.1 mm (0.004 in) Maximum distortion (warping)	EM-94
	12	• Cylinder block and pistons	• Visual	No scuffing on cylinder walls or piston	EM-116

*1: Turn the ignition switch ON.

*2: Engine running at 3,000 rpm for 10 minutes.

*3: Drive at 90 km/h (55 MPH) for 30 minutes and then let idle for 10 minutes.

*4: After 60 minutes of cool down time.

For more information, refer to CO-6.

Component Inspection

INFOID:0000000001717588

COOLING FAN MOTORS-1 AND -2

1. Disconnect cooling fan motor harness connectors.
2. Supply cooling fan motor terminals with battery voltage and check operation.

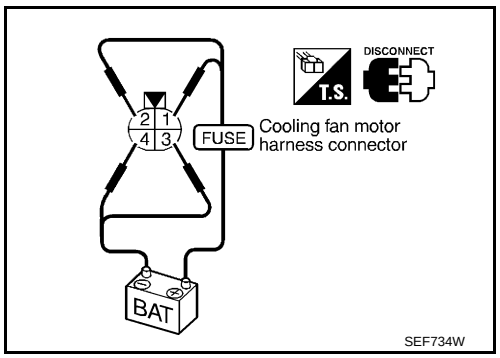

Cooling fan speed	Cooling fan motor terminals	
	(+)	(–)
Middle (MID)	1	3 and 4
	2	3 and 4
	1 and 2	3
	1 and 2	4
High (HI)	1 and 2	3 and 4

Cooling fan motor should operate.

If NG, replace cooling fan motor.

DTC P1225 TP SENSOR

Component Description

INFOID:0000000001717589

Electric throttle control actuator consists of throttle control motor, throttle position sensor, etc. The throttle position sensor responds to the throttle valve movement.
The throttle position sensor has the two sensors. These sensors are a kind of potentiometers which transform the throttle valve position into output voltage, and emit the voltage signal to the ECM. In addition, these sensors detect the opening and closing speed of the throttle valve and feed the voltage signals to the ECM. The ECM judges the current opening angle of the throttle valve from these signals and the ECM controls the throttle control motor to make the throttle valve opening angle properly in response to driving condition.

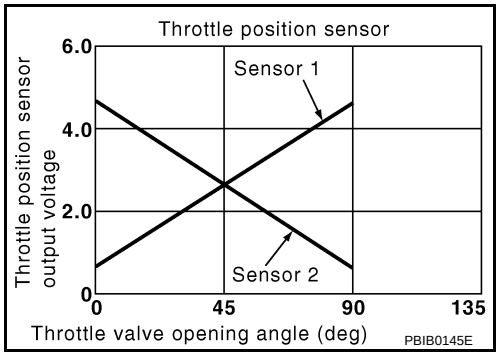

On Board Diagnosis Logic

INFOID:0000000001717590

The MIL will not light up for this diagnosis.

DTC No.	Trouble diagnosis name	DTC detecting condition	Possible cause
P1225 1225	Closed throttle position learning performance	Closed throttle position learning value is excessively low.	• Electric throttle control actuator (TP sensor 1 and 2)

DTC Confirmation Procedure

INFOID:0000000001717591

NOTE:
If DTC Confirmation Procedure has been previously conducted, always perform the following before conducting the next step.
1. Turn ignition switch OFF and wait at least 10 seconds.
2. Turn ignition switch ON.
3. Turn ignition switch OFF and wait at least 10 seconds.

TESTING CONDITION:
Before performing the following procedure, confirm that battery voltage is more than 10V at idle.

1. Turn ignition switch ON.
2. Turn ignition switch OFF and wait at least 10 seconds.
3. Turn ignition switch ON.
4. Check 1st trip DTC.
5. If 1st trip DTC is detected, go to EC-473, "Diagnosis Procedure".

Diagnosis Procedure

INFOID:0000000001717592

1. CHECK ELECTRIC THROTTLE CONTROL ACTUATOR VISUALLY

1. Turn ignition switch OFF.
2. Remove the intake air duct.
3. Check if foreign matter is caught between the throttle valve and the housing.

OK or NG

OK >> GO TO 2.
NG >> Remove the foreign matter and clean the electric throttle control actuator inside.

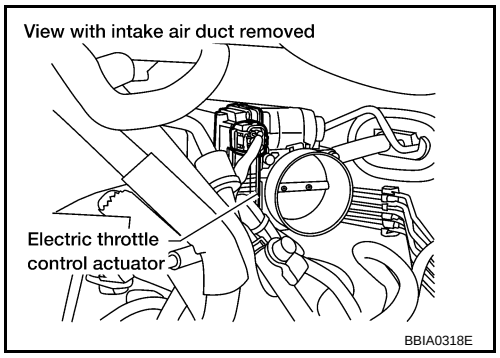

2. REPLACE ELECTRIC THROTTLE CONTROL ACTUATOR

1. Replace the electric throttle control actuator.
2. Perform EC-73, "Throttle Valve Closed Position Learning".
3. Perform EC-73, "Idle Air Volume Learning".

>> **INSPECTION END**

Removal and Installation

INFOID:0000000001717593

ELECTRIC THROTTLE CONTROL ACTUATOR

Refer to EM-17.

DTC P1226 TP SENSOR

Component Description

INFOID:0000000001717594

Electric throttle control actuator consists of throttle control motor, throttle position sensor, etc. The throttle position sensor responds to the throttle valve movement.
The throttle position sensor has the two sensors. These sensors are a kind of potentiometers which transform the throttle valve position into output voltage, and emit the voltage signal to the ECM. In addition, these sensors detect the opening and closing speed of the throttle valve and feed the voltage signals to the ECM. The ECM judges the current opening angle of the throttle valve from these signals and the ECM controls the throttle control motor to make the throttle valve opening angle properly in response to driving condition.

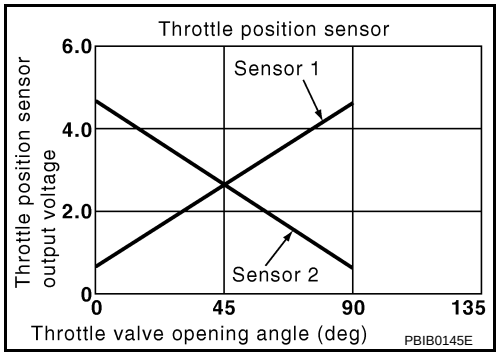

On Board Diagnosis Logic

INFOID:0000000001717595

The MIL will not light up for this diagnosis.

DTC No.	Trouble diagnosis name	DTC detecting condition	Possible cause
P1226 1226	Closed throttle position learning performance	Closed throttle position learning is not performed successfully, repeatedly.	• Electric throttle control actuator (TP sensor 1 and 2)

DTC Confirmation Procedure

INFOID:0000000001717596

NOTE:
If DTC Confirmation Procedure has been previously conducted, always perform the following before conducting the next step.
1. Turn ignition switch OFF and wait at least 10 seconds.
2. Turn ignition switch ON.
3. Turn ignition switch OFF and wait at least 10 seconds.

TESTING CONDITION:
Before performing the following procedure, confirm that battery voltage is more than 10V at idle.

1. Turn ignition switch ON.
2. Turn ignition switch OFF and wait at least 10 seconds.
3. Turn ignition switch ON.
4. Repeat step 2 and 3 for 32 times.
5. Check 1st trip DTC.
6. If 1st trip DTC is detected, go to EC-475, "Diagnosis Procedure".

Diagnosis Procedure

INFOID:0000000001717597

1. CHECK ELECTRIC THROTTLE CONTROL ACTUATOR VISUALLY

1. Turn ignition switch OFF.
2. Remove the intake air duct.
3. Check if foreign matter is caught between the throttle valve and the housing.

OK or NG

OK >> GO TO 2.
NG >> Remove the foreign matter and clean the electric throttle control actuator inside.

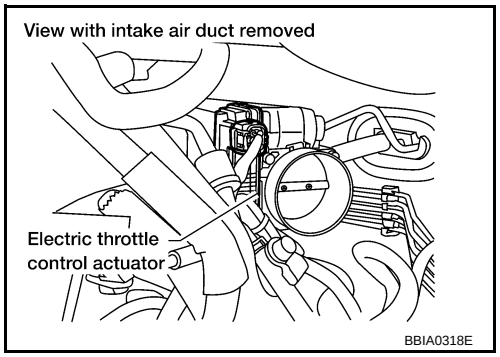

2. REPLACE ELECTRIC THROTTLE CONTROL ACTUATOR

1. Replace the electric throttle control actuator.
2. Perform EC-73, "Throttle Valve Closed Position Learning".
3. Perform EC-73, "Idle Air Volume Learning".

>> **INSPECTION END**

Removal and Installation

INFOID:0000000001717598

ELECTRIC THROTTLE CONTROL ACTUATOR

Refer to EM-17.

DTC P1402 EGR FUNCTION

Description

INFOID:0000000001717599

SYSTEM DESCRIPTION

Sensor	Input Signal to ECM	ECM function	Actuator
Camshaft position sensor (PHASE)	Engine speed*2 Piston position	EGR volume control	EGR volume control valve
Crankshaft position sensor (POS)			
Mass air flow sensor	Amount of intake air		
Engine coolant temperature sensor	Engine coolant temperature		
Throttle position sensor	Throttle position		
Accelerator pedal position sensor	Accelerator pedal position		
Park/neutral position (PNP) switch	Gear position		
Battery	Battery voltage*2		
Air conditioner switch	Air conditioner operation *1		
Power steering pressure sensor	Power steering operation		
Electrical load	Electrical load signal *1		
Wheel sensor	Vehicle speed *1		
TCM	Gear position, shifting signal *1		

*1: This signal is sent to the ECM through CAN communication line.

*2: ECM determines the start signal status by the signals of engine speed and battery voltage.

This system controls flow rate of EGR led from exhaust manifold to intake manifold. The opening of the EGR by-pass passage in the EGR volume control valve changes to control the flow rate. A built-in step motor moves the valve in steps corresponding to the ECM output pulses. The opening of the valve varies for optimum engine control. The optimum value stored in the ECM is determined by considering various engine conditions. The EGR volume control valve remains closed under the following conditions.

- Engine stopped
- Engine starting
- Engine idling
- Low engine coolant temperature
- Excessively high engine coolant temperature
- High engine speed
- Wide open throttle
- Low battery voltage

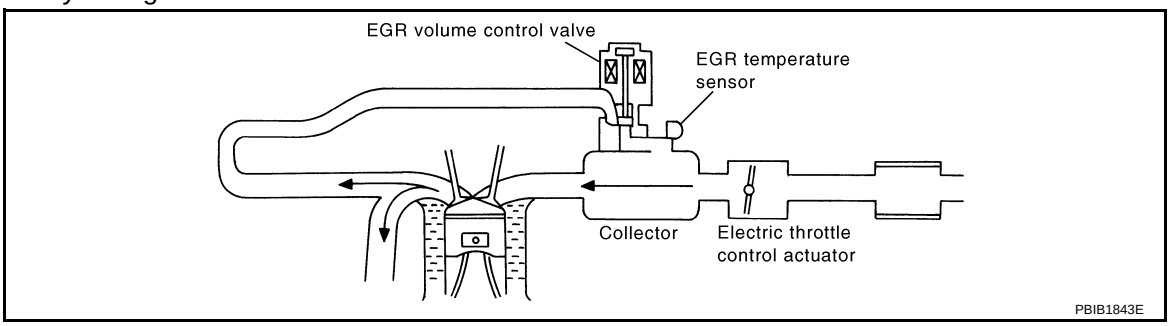

COMPONENT DESCRIPTION

EGR Volume Control Valve

The EGR volume control valve uses a step motor to control the flow rate of EGR from exhaust manifold. This motor has four winding phases. It operates according to the output pulse signal of the ECM. Two windings are turned ON and OFF in sequence. Each time an ON pulse is issued, the valve opens or closes, changing the flow rate. When no change in the flow rate is needed, the ECM does not issue the pulse signal. A certain voltage signal is issued so that the valve remains at that particular opening.

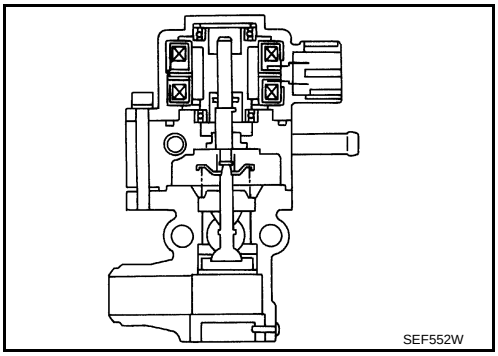

EGR Temperature Sensor

The EGR temperature sensor detects temperature changes in the EGR passageway. When the EGR volume control valve opens, hot exhaust gases flow, and the temperature in the passageway changes. The EGR temperature sensor is a thermistor that modifies a voltage signal sent from the ECM. This modified signal then returns to the ECM as an input signal. As the temperature increases, EGR temperature sensor resistance decreases.

This sensor is not directly used to control the engine system. It is used only for the on board diagnosis.

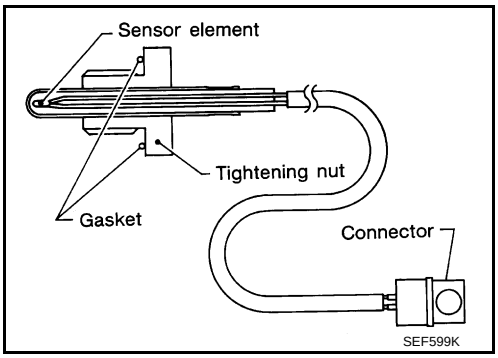

<Reference data>

EGR temperature °C (°F)	Voltage* V	Resistance MΩ
0 (32)	4.59	0.73 - 0.88
50 (122)	2.32	0.074 - 0.082
100 (212)	0.62	0.011 - 0.014

*: This data is reference value and is measured between ECM terminal 54 (EGR temperature sensor) and ground.

CAUTION:

Do not use ECM ground terminals when measuring input/output voltage. Doing so may damage the ECM's transistor. Use a ground other than ECM terminals, such as the ground.

When EGR system is operating.

Voltage: 0 - 1.5V

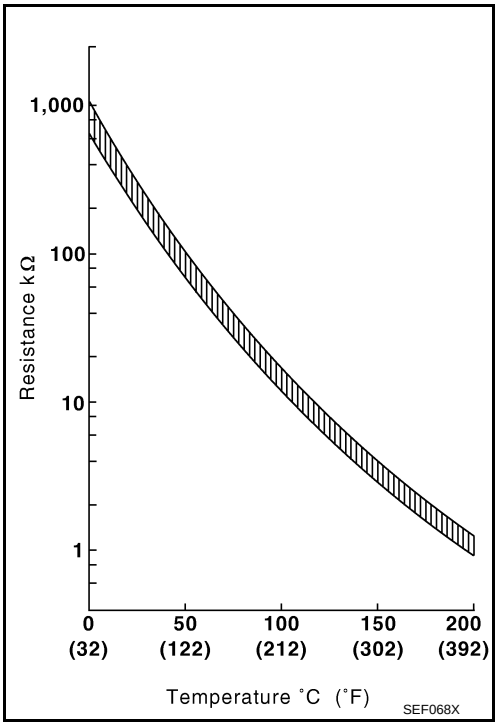

CONSULT-III Reference Value in Data Monitor Mode

INFOID:0000000001717600

Specification data are reference values.

MONITOR ITEM	CONDITION		SPECIFICATION
EGR TEMP SEN	• Engine: After warming up		Less than 4.5V
EGR VOL CON/V	• Engine: After warming up • Air conditioner switch: OFF • Shift lever: P or N • No load	Idle	0 step
		Revving engine up to 3,000 rpm quickly	10 - 55 step

On Board Diagnosis Logic

INFOID:0000000001717601

If the EGR temperature sensor detects EGR flow under the condition that does not call for EGR, a high-flow malfunction is diagnosed.

DTC No.	Trouble diagnosis name	DTC detecting condition	Possible cause
P1402 1402	EGR function (Open)	EGR flow is detected under the condition that does not call for EGR.	• Harness or connectors (The EGR volume control valve circuit is open or shorted.) • EGR volume control valve leaking or stuck open • EGR temperature sensor

DTC Confirmation Procedure

INFOID:0000000001717602

NOTE:
- Diagnosis for this DTC will occur when engine coolant temperature is below 50 to 60°C (122 to 140°F). Therefore, it will be better to turn ignition switch ON (start engine) at the engine coolant temperature below 30°C (86°F) when starting DTC confirmation procedure.
- If DTC Confirmation Procedure has been previously conducted, always perform the following before conducting the next step.

1. Turn ignition switch OFF and wait at least 10 seconds.
2. Turn ignition switch ON.
3. Turn ignition switch OFF and wait at least 10 seconds.

TESTING CONDITION:
- **Always perform the test at a temperature above –10°C (14°F).**
- **Engine coolant temperature and EGR temperature must be verified in "DATA MONITOR" mode with CONSULT-III before starting DTC WORK SUPPORT test. If it is out of range below, the test cannot be conducted.**

COOLAN TEMP/S : –10 to 50°C (14 to 122°F)*
EGR TEMP SEN : Less than 4.8V

If the values are out of the ranges indicated above, park the vehicle in a cool place and allow the engine temperature to stabilize. Do not attempt to reduce the engine coolant temperature or EGR temperature with a fan or means other than ambient air. Doing so may produce an inaccurate diagnostic result.
*: Although CONSULT-III screen displays "–10 to 40°C (14 to 104°F)" as a range of engine coolant temperature, ignore it.

WITH CONSULT-III

1. Turn ignition switch OFF, and wait at least 10 seconds, and then turn ON.
2. Select "EGR SYSTEM P1402" of "EGR SYSTEM" in "DTC WORK SUPPORT" mode with CONSULT-III.
3. Touch "START".
4. Start engine and let it idle until "TESTING" on CONSULT-III screen is turned to "COMPLETED". (It will take 80 seconds or more.)
   If "TESTING" is not displayed after 5 minutes, turn ignition OFF and cool the engine coolant temperature to the range of –10 to 50°C (14 to 122°F). Retry from step 1.
5. Make sure that "OK" is displayed after touching "SELF-DIAG RESULTS". If "NG" is displayed, refer to EC-482, "Diagnosis Procedure".

WITH GST

1. Turn ignition switch ON and select Service $01 with GST.
2. Check that engine coolant temperature is within the range of –10 to 50°C (14 to 122°F).

3. Check that voltage between ECM terminal 54 (EGR temperature sensor signal) and ground is less than 4.8V.
4. Start engine and let it idle for at least 80 seconds.
5. Stop engine.
6. Turn ignition switch OFF, wait at least 10 seconds and then turn ON.
7. Select Service $07 with GST.
8. Check 1st trip DTC.
9. If 1st trip DTC is detected, go to EC-482, "Diagnosis Procedure".

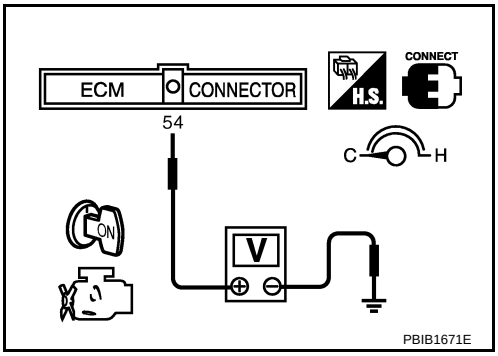

Wiring Diagram

INFOID:0000000001717603

EC-EGRC1-01

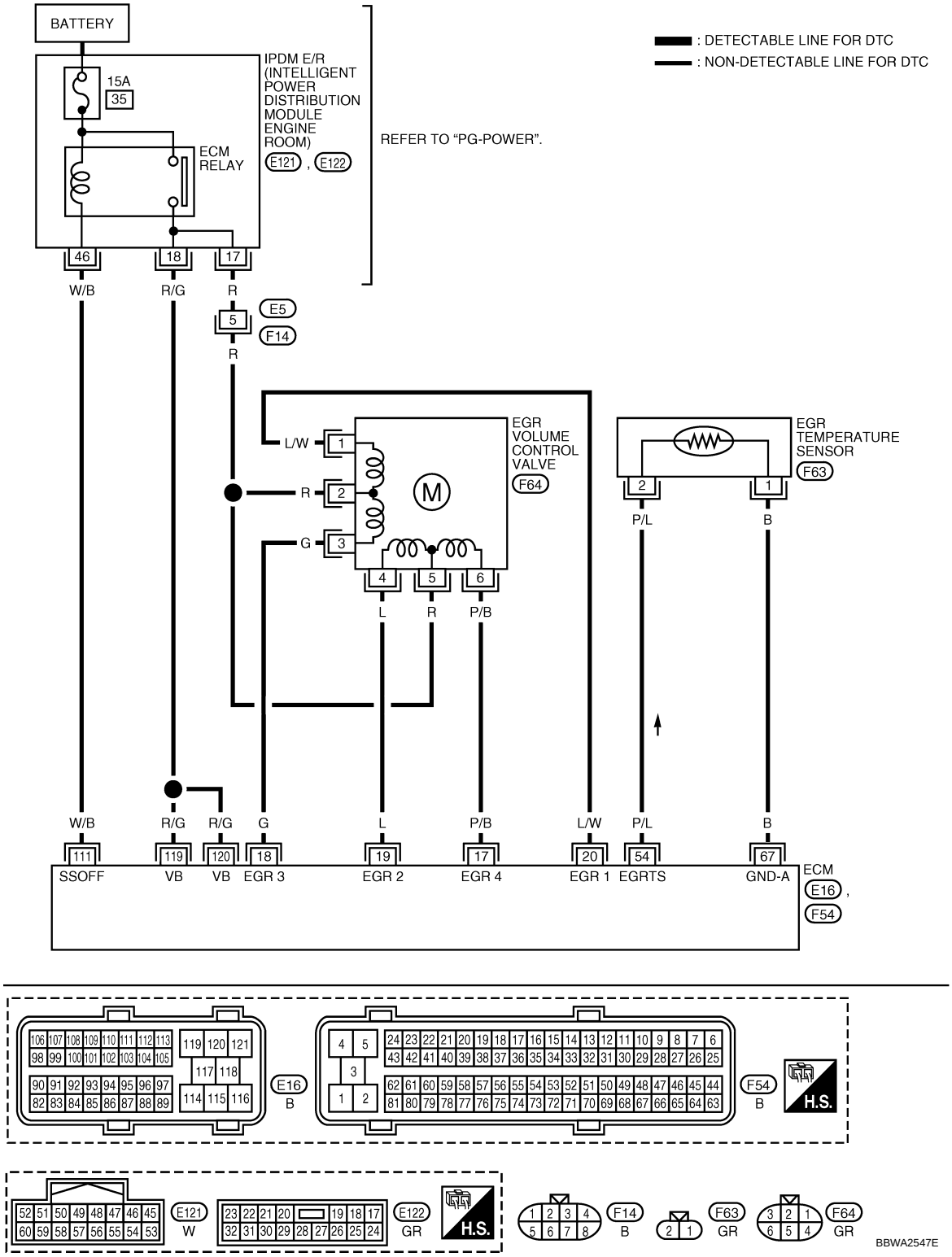

Specification data are reference values and are measured between each terminal and ground.

CAUTION:

Do not use ECM ground terminals when measuring input/output voltage. Doing so may result in damage to the ECM's transistor. Use a ground other than ECM terminals, such as the ground.

TERMINAL NO.	WIRE COLOR	ITEM	CONDITION	DATA (DC Voltage)
17 18 19 20	P/B G L L/W	EGR volume control valve	**[Engine is running]** • Idle speed	0.1 - 14V
54	P/L	EGR temperature sensor	**[Ignition switch: ON]**	Less than 4.5V
			[Engine is running] • **Warm-up condition** • EGR system: Operating	0 - 1.5V
67	B	Sensor ground	**[Engine is running]** • **Warm-up condition** • Idle speed	Approximately 0V
111	W/B	ECM relay (Self shut-off)	**[Engine is running]** **[Ignition switch: OFF]** • For a few seconds after turning ignition switch OFF	0 - 1.5V
			[Ignition switch: OFF] • More than a few seconds after turning ignition switch OFF	BATTERY VOLTAGE (11 - 14V)
119 120	R/G R/G	Power supply for ECM	**[Ignition switch: ON]**	BATTERY VOLTAGE (11 - 14V)

★: Average voltage for pulse signal (Actual pulse signal can be confirmed by oscilloscope.)

Diagnosis Procedure

INFOID:0000000001717604

1. CHECK EGR VOLUME CONTROL VALVE POWER SUPPLY CIRCUIT

1. Turn ignition switch OFF.
2. Disconnect EGR volume control valve harness connector.
3. Turn ignition switch ON.

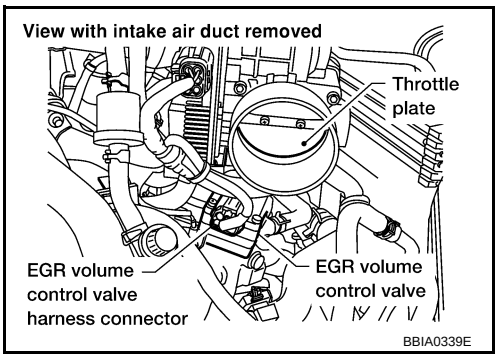

4. Check voltage between EGR volume control valve terminals 2, 5 and ground with CONSULT-III or tester.

Voltage: Battery voltage

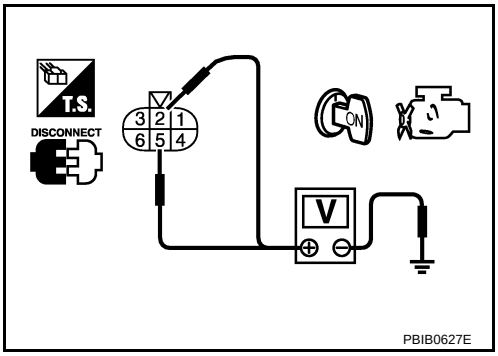

OK or NG

OK >> GO TO 3.
NG >> GO TO 2.

2. DETECT MALFUNCTIONING PART

Check the following.
• Harness connectors E5, F14

- Harness for open or short between EGR volume control valve and IPDM E/R
- Harness for open or short between EGR volume control valve and ECM

>> Repair harness or connectors.

3. CHECK EGR VOLUME CONTROL VALVE OUTPUT SIGNAL CIRCUIT FOR OPEN AND SHORT

1. Turn ignition switch OFF.
2. Disconnect ECM harness connector.
3. Check harness continuity between ECM terminals and EGR volume control valve terminals as follows. Refer to Wiring Diagram.

ECM terminal	EGR volume control valve
17	6
18	3
19	4
20	1

Continuity should exist.

4. Also check harness for short to ground and short to power.

OK or NG

OK >> GO TO 4.
NG >> Repair open circuit or short to ground or short to power in harness or connectors.

4. CHECK EGR VOLUME CONTROL VALVE

Refer to EC-345, "Component Inspection".

OK or NG

OK >> GO TO 5.
NG >> Replace EGR volume control valve.

5. CHECK EGR TEMPERATURE SENSOR

Refer to EC-352, "Component Inspection".

OK or NG

OK >> GO TO 6.
NG >> Replace EGR temperature sensor.

6. CHECK INTERMITTENT INCIDENT

Refer to EC-130.

>> **INSPECTION END**

DTC P1421 COLD START CONTROL

Description

INFOID:0000000001717605

ECM controls ignition timing and engine idle speed when engine is started with prewarming up condition. This control promotes the activation of three way catalyst by heating the catalyst and reduces emissions.

On Board Diagnosis Logic

INFOID:0000000001717606

DTC No.	Trouble diagnosis name	DTC detecting condition	Possible cause
P1421 1421	Cold start emission reduction strategy monitoring	ECM does not control ignition timing and engine idle speed properly when engine is started with prewarming up condition.	• Lack of intake air volume • Fuel injection system • ECM

DTC Confirmation Procedure

INFOID:0000000001717607

NOTE:
- If DTC Confirmation Procedure has been previously conducted, always perform the following before conducting the next step.

1. Turn ignition switch OFF and wait at least 10 seconds.
2. Turn ignition switch ON.
3. Turn ignition switch OFF and wait at least 10 seconds.

- **If DTC P1421 is displayed with other DTC, first perform the trouble diagnosis for other DTC.**

TESTING CONDITION:
Before performing the following procedure, confirm that battery voltage is more than 11V at idle.

WITH CONSULT-III

1. Turn ignition switch OFF and wait at least 10 seconds.
2. Turn ignition switch ON.
3. Select “DATA MONITOR” mode with CONSULT-III.
4. Check that the “COOLAN TEMP/S” indication is between 4°C (39°F) and 36°C (97°F).
   If “COOLAN TEMP/S” indication is within the specified value, go to the following step.
   If “COOLAN TEMP/S” indication is out of the specified value, cool engine down or warm engine up and go to step 1.
5. Start engine and let it idle for 5 minutes.
6. Check 1st trip DTC.
7. If 1st trip DTC is detected, go to EC-484, "Diagnosis Procedure".

WITH GST

Follow the procedure “WITH CONSULT-III” above.

Diagnosis Procedure

INFOID:0000000001717608

1. PERFORM IDLE AIR VOLUME LEARNING

Perform EC-73, "Idle Air Volume Learning".
Is Idle Air Volume Learning carried out successfully?

Yes or No

Yes >> GO TO 2.
No >> Follow the instruction of Idle Air Volume Learning.

2. CHECK INTAKE SYSTEM

Check for the cause of intake air volume lacking. Refer to the following.
- Crushed intake air passage
- Intake air passage clogging

OK or NG

OK >> GO TO 3.
NG >> Repair or replace malfunctioning part

3. CHECK FUEL INJECTION SYSTEM FUNCTION

Perform EC-271, "DTC Confirmation Procedure" in DTC P0171, P0174 FUEL INJECTION SYSTEM FUNCTION.

OK or NG

OK >> GO TO 4.
NG >> Go to EC-276, "Diagnosis Procedure".

4. PERFORM DTC CONFIRMATION PROCEDURE

With CONSULT-III

1. Turn ignition switch ON.
2. Select “SELF-DIAG RESULTS” mode with CONSULT-III.
3. Touch “ERASE”.
4. **Perform DTC Confirmation Procedure.**
   See EC-484, "DTC Confirmation Procedure".
5. Is the 1st trip DTC P1421 displayed again?

With GST

1. Turn ignition switch ON.
2. Select Service $04 with GST.
3. **Perform DTC Confirmation Procedure.**
   See EC-484, "DTC Confirmation Procedure".
4. Is the 1st trip DTC P1421 displayed again?

Yes or No

Yes >> GO TO 5.
No >> **INSPECTION END**

5. REPLACE ECM

1. Replace ECM.
2. Perform initialization of NVIS (NATS) system and registration of all NVIS (NATS) ignition key IDs.
   Refer to BL-181, "ECM Re-communicating Function".
3. Perform EC-72, "VIN Registration".
4. Perform EC-73, "Accelerator Pedal Released Position Learning".
5. Perform EC-73, "Throttle Valve Closed Position Learning".
6. Perform EC-73, "Idle Air Volume Learning".

>> **INSPECTION END**

DTC P1564 ASCD STEERING SWITCH

Component Description

INFOID:0000000001717609

ASCD steering switch has variant values of electrical resistance for each button. ECM reads voltage variation of switch, and determines which button is operated.

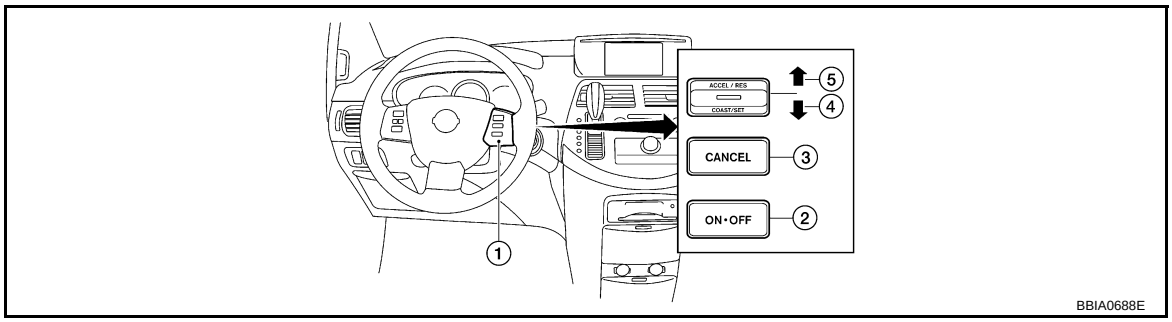

1. ASCD steering switch
2. MAIN switch
3. CANCEL switch
4 SET/COAST switch
5. RESUME/ACCELERATE switch

Refer to EC-25 for the ASCD function.

CONSULT-III Reference Value in Data Monitor Mode

INFOID:0000000001717610

Specification data are reference values.

MONITOR ITEM	CONDITION		SPECIFICATION
MAIN SW	• Ignition switch: ON	MAIN switch: Pressed	ON
		MAIN switch: Released	OFF
CANCEL SW	• Ignition switch: ON	CANCEL switch: Pressed	ON
		CANCEL switch: Released	OFF
RESUME/ACC SW	• Ignition switch: ON	RESUME/ACCELERATE switch: Pressed	ON
		RESUME/ACCELERATE switch: Released	OFF
SET SW	• Ignition switch: ON	SET/COAST switch: Pressed	ON
		SET/COAST switch: Released	OFF

On Board Diagnosis Logic

INFOID:0000000001717611

This self-diagnosis has the one trip detection logic.
The MIL will not light up for this diagnosis.
NOTE:
If DTC P1564 is displayed with DTC P0605, first perform the trouble diagnosis for DTC P0605. Refer to EC-447.

DTC No.	Trouble Diagnosis Name	DTC Detecting Condition	Possible Cause
P1564 1564	ASCD steering switch	• An excessively high voltage signal from the ASCD steering switch is sent to ECM. • ECM detects that input signal from the ASCD steering switch is out of the specified range. • ECM detects that the ASCD steering switch is stuck ON.	• Harness or connectors (The switch circuit is open or shorted.) • ASCD steering switch • ECM

DTC Confirmation Procedure

INFOID:0000000001717612

1. If DTC Confirmation Procedure has been previously conducted, always perform the following before conducting the next step.

a. Turn ignition switch OFF and wait at least 10 seconds.
b. Turn ignition switch ON.
c. Turn ignition switch OFF and wait at least 10 seconds.
2. Turn ignition switch ON.
3. Wait at least 10 seconds.
4. Press MAIN switch for at least 10 seconds, then release it and wait at least 10 seconds.
5. Press CANCEL switch for at least 10 seconds, then release it and wait at least 10 seconds.
6. Press RESUME/ACCELERATE switch for at least 10 seconds, then release it and wait at least 10 seconds.
7. Press SET/COAST switch for at least 10 seconds, then release it and wait at least 10 seconds.
8. Check DTC.
9. If DTC is detected, go to EC-489, "Diagnosis Procedure".

Wiring Diagram

INFOID:0000000001717613

EC-ASC/SW-01

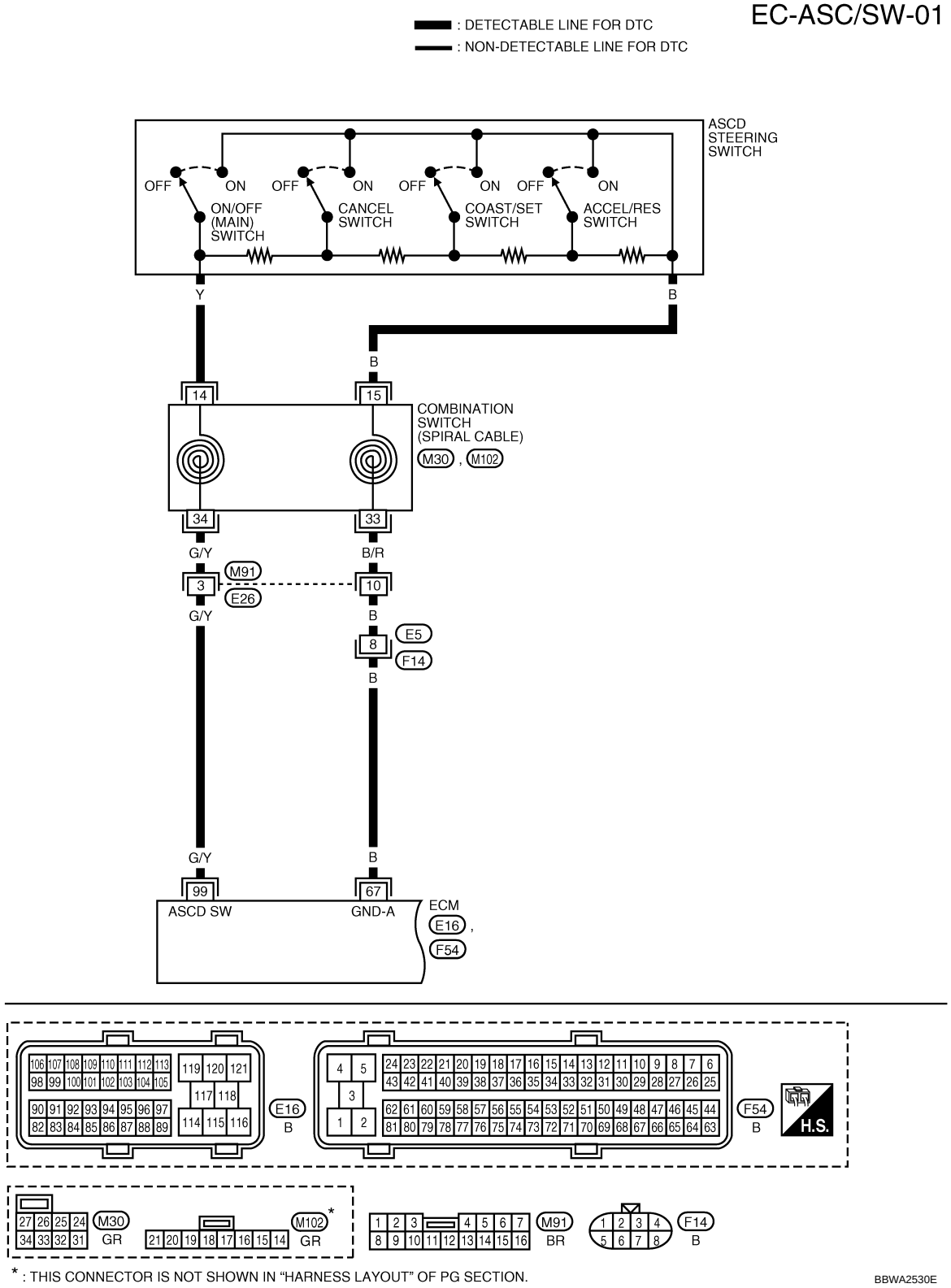

Specification data are reference values and are measured between each terminal and ground.

CAUTION:

Do not use ECM ground terminals when measuring input/output voltage. Doing so may result in damage to the ECM's transistor. Use a ground other than ECM terminals, such as the ground.

TERMINAL NO.	WIRE COLOR	ITEM	CONDITION	DATA (DC Voltage)
67	B	Sensor ground	**[Engine is running]** • **Warm-up condition** • Idle speed	Approximately 0V
99	G/Y	ASCD steering switch	**[Ignition switch: ON]** • ASCD steering switch: OFF	Approximately 4V
			[Ignition switch: ON] • MAIN switch: Pressed	Approximately 0V
			[Ignition switch: ON] • CANCEL switch: Pressed	Approximately 1V
			[Ignition switch: ON] • RESUME/ACCELERATE switch: Pressed	Approximately 3V
			[Ignition switch: ON] • SET/COAST switch: Pressed	Approximately 2V

Diagnosis Procedure

INFOID:0000000001717614

1. CHECK GROUND CONNECTIONS

1. Turn ignition switch OFF.
2. Loosen and retighten three ground screws on the body. Refer to EC-138, "Ground Inspection".

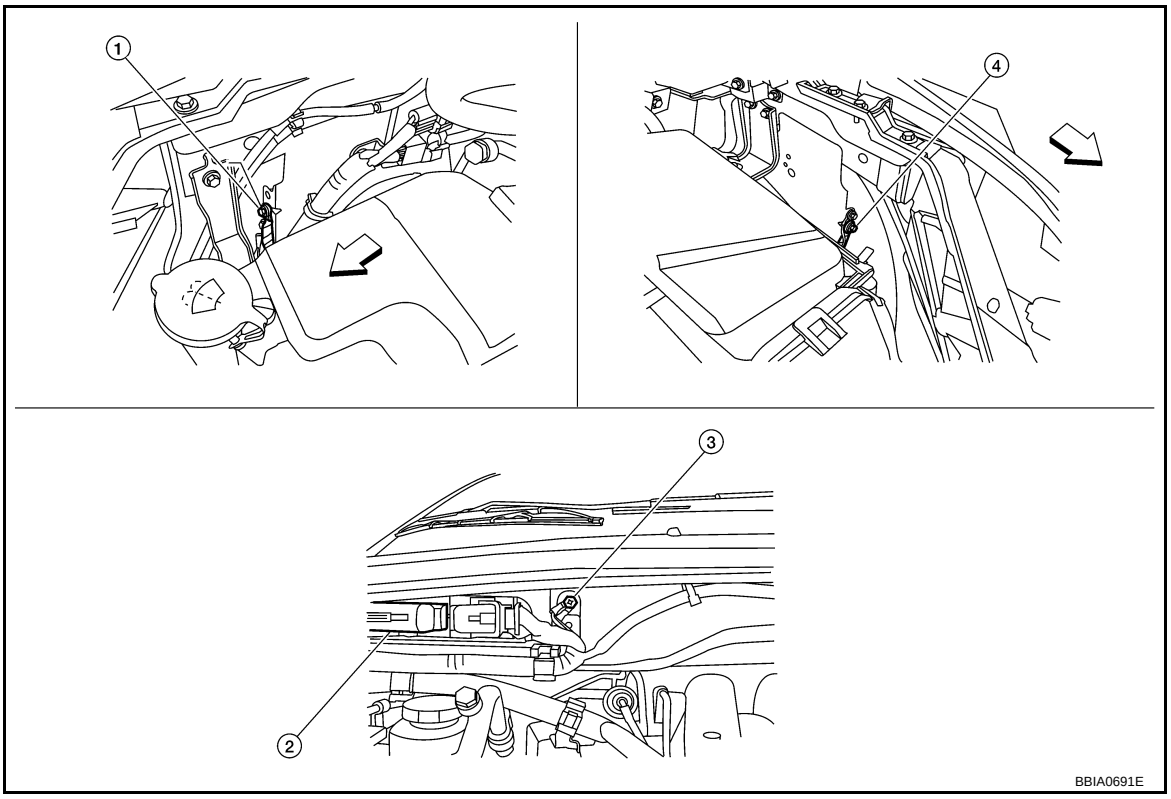

⇦: Vehicle front

1. Body ground E24
2. ECM
3. Body ground E9
4. Body ground E15

OK or NG

OK >> GO TO 2.
NG >> Repair or replace ground connections.

2. CHECK ASCD STEERING SWITCH CIRCUIT

With CONSULT-III

1. Turn ignition switch ON.
2. Select “MAIN SW”, “CANCEL SW”, “RESUME/ACC SW” and “SET/COAST SW” in “DATA MONITOR” mode with CONSULT-III.
3. Check each item indication under the following conditions.

Switch	Monitor item	Condition	Indication
MAIN switch	MAIN SW	Pressed	ON
		Released	OFF
CANCEL switch	CANCEL SW	Pressed	ON
		Released	OFF
RESUME/ACCEL-ERATE switch	RESUME/ACC SW	Pressed	ON
		Released	OFF
SET/COAST switch	SET SW	Pressed	ON
		Released	OFF

Without CONSULT-III

1. Turn ignition switch ON.
2. Check voltage between ECM terminal 99 and ground with pressing each button.

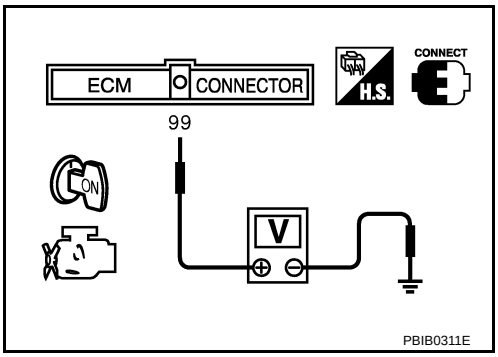

Switch	Condition	Voltage [V]
MAIN switch	Pressed	Approx. 0
	Released	Approx. 4
CANCEL switch	Pressed	Approx. 1
	Released	Approx. 4
RESUME/ACCELERATE switch	Pressed	Approx. 3
	Released	Approx. 4
SET/COAST switch	Pressed	Approx. 2
	Released	Approx. 4

OK or NG

OK >> GO TO 8.
NG >> GO TO 3.

3. CHECK ASCD STEERING SWITCH GROUND CIRCUIT FOR OPEN AND SHORT

1. Turn ignition switch OFF.
2. Disconnect combination switch harness connector M102.
3. Disconnect ECM harness connector.
4. Check harness continuity between combination switch terminal 15 and ECM terminal 67. Refer to Wiring Diagram.

Continuity should exist.

5. Also check harness for short to ground and short to power.

OK or NG

OK >> GO TO 5.
NG >> GO TO 4.

4. DETECT MALFUNCTIONING PART

Check the following.
- Harness connectors E5, F14

- Harness connectors E26, M91
- Combination switch (spiral cable)
- Harness for open and short between ECM and combination switch

>> Repair open circuit or short to ground or short to power in harness or connectors.

5. CHECK ASCD STEERING SWITCH INPUT SIGNAL CIRCUIT FOR OPEN AND SHORT

1. Check harness continuity between ECM terminal 99 and combination switch terminal 14. Refer to Wiring Diagram.

Continuity should exist.

2. Also check harness for short to ground and short to power.

OK or NG

OK >> GO TO 7.
NG >> GO TO 6.

6. DETECT MALFUNCTIONING PART

Check the following.
- Harness connectors E26, M91
- Combination switch (spiral cable)
- Harness for open and short between ECM and combination switch

>> Repair open circuit or short to ground or short to power in harness or connectors.

7. CHECK ASCD STEERING SWITCH

Refer to EC-491, "Component Inspection".

OK or NG

OK >> GO TO 8.
NG >> Replace ASCD steering switch.

8. CHECK INTERMITTENT INCIDENT

Refer to EC-130.

>> **INSPECTION END**

Component Inspection

INFOID:0000000001717615

ASCD STEERING SWITCH

1. Disconnect combination switch (spiral cable).
2. Check continuity between combination switch (spiral cable) terminals 14 and 15 with pushing each switch.

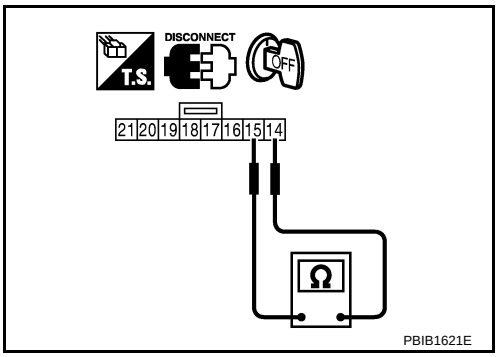

Switch	Condition	Resistance [Ω]
MAIN switch	Pressed	Approx. 0
	Released	Approx. 4,000
CANCEL switch	Pressed	Approx. 250
	Released	Approx. 4,000
RESUME/ACCELERATE switch	Pressed	Approx. 1,480
	Released	Approx. 4,000
SET/COAST switch	Pressed	Approx. 660
	Released	Approx. 4,000

DTC P1572 ASCD BRAKE SWITCH

Component Description

INFOID:0000000001717616

When the brake pedal is depressed, ASCD brake switch is turned OFF and stop lamp switch is turned ON. ECM detects the state of the brake pedal by this input of two kinds (ON/OFF signal).
Refer to EC-25 for the ASCD function.

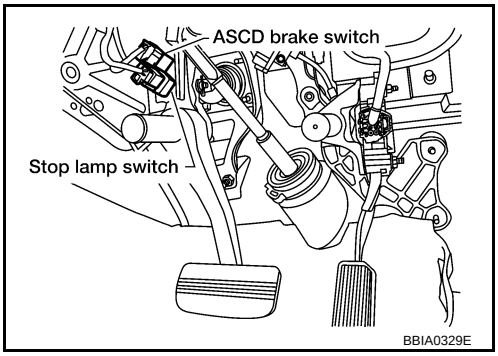

CONSULT-III Reference Value in Data Monitor Mode

INFOID:0000000001717617

Specification data are reference values.

MONITOR ITEM	CONDITION		SPECIFICATION
BRAKE SW1 (ASCD brake switch)	• Ignition switch: ON	Brake pedal: Fully released	ON
		Brake pedal: Slightly depressed	OFF
BRAKE SW2 (Stop lamp switch)	• Ignition switch: ON	Brake pedal: Fully released	OFF
		Brake pedal: Slightly depressed	ON

On Board Diagnosis Logic

INFOID:0000000001717618

This self-diagnosis has the one trip detection logic.
The MIL will not light up for this diagnosis.
NOTE:
- **If DTC P1572 is displayed with DTC P0605, first perform the trouble diagnosis for DTC P0605. Refer to EC-447.**
- **This self-diagnosis has the one trip detection logic. When malfunction A is detected, DTC is not stored in ECM memory. And in that case, 1st trip DTC and 1st trip freeze frame data are displayed. 1st trip DTC is erased when ignition switch OFF. And even when malfunction A is detected in two consecutive trips, DTC is not stored in ECM memory.**

DTC No.	Trouble Diagnosis Name	DTC Detecting Condition		Possible Cause
P1572 1572	ASCD brake switch	A)	When the vehicle speed is above 30 km/h (19 MPH), ON signals from the stop lamp switch and the ASCD brake switch are sent to the ECM at the same time.	• Harness or connectors (The stop lamp switch circuit is shorted.) • Harness or connectors (The ASCD brake switch circuit is shorted.) • Stop lamp switch • ASCD brake switch • Incorrect stop lamp switch installation • Incorrect ASCD brake switch installation • ECM
		B)	ASCD brake switch signal is not sent to ECM for extremely long time while the vehicle is driving	

DTC Confirmation Procedure

INFOID:0000000001717619

CAUTION:
Always drive vehicle at a safe speed.
NOTE:
- If DTC Confirmation Procedure has been previously conducted, always perform the following before conducting the next step.

1. Turn ignition switch OFF and wait at least 10 seconds.
2. Turn ignition switch ON.
3. Turn ignition switch OFF and wait at least 10 seconds.

- Procedure for malfunction B is not described here. It takes extremely long time to complete procedure for malfunction B. By performing procedure for malfunction A, the incident that causes malfunction B can be detected.

WITH CONSULT-III

TESTING CONDITION:

Steps 4 and 5 may be conducted with the drive wheels lifted in the shop or by driving the vehicle. If a road test is expected to be easier, it is unnecessary to lift the vehicle.

1. Start engine (TCS switch or VDC switch OFF).
2. Select “DATA MONITOR” mode with CONSULT-III.
3. Press MAIN switch and make sure that CRUISE indictor lights up.
4. Drive the vehicle for at least 5 consecutive seconds under the following condition.

VHCL SPEED SE	More than 30 km/h (19 MPH)
Shift lever	Suitable position

5. Check 1st trip DTC.
6. If 1st trip DTC is detected, go to EC-495, "Diagnosis Procedure".
   If 1st trip DTC is not detected, go to the following step.
7. Drive the vehicle for at least 5 consecutive seconds under the following condition.

VHCL SPEED SE	More than 30 km/h (19 MPH)
Shift lever	Suitable position
Driving location	Depress the brake pedal for more than 5 seconds so as not to come off from the above-mentioned vehicle speed.

8. Check 1st trip DTC.
9. If 1st trip DTC is detected, go to EC-495, "Diagnosis Procedure".

WITH GST

Follow the procedure “WITH CONSULT-III” above.

Wiring Diagram

INFOID:0000000001717620

EC-ASC/BS-01

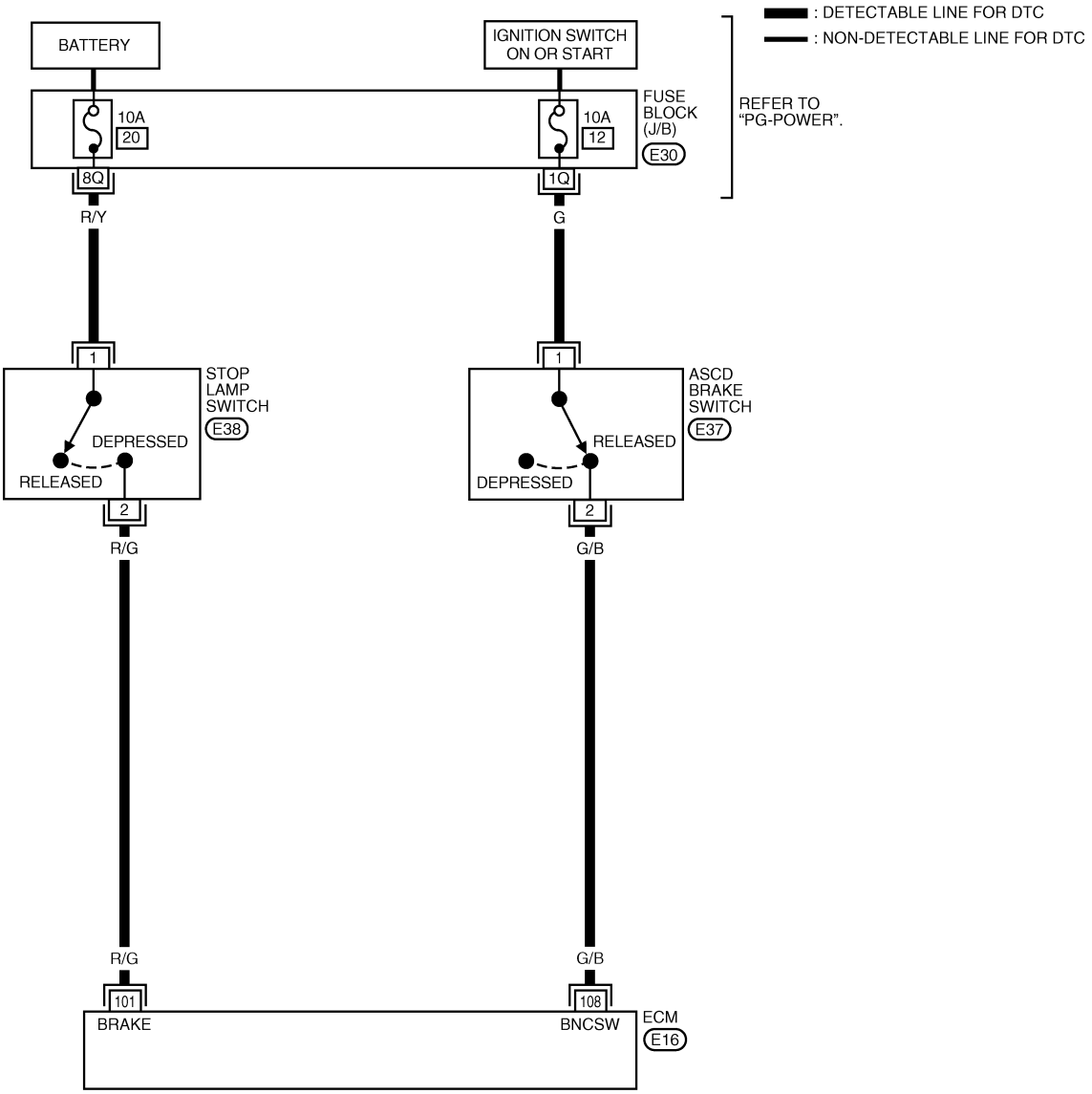

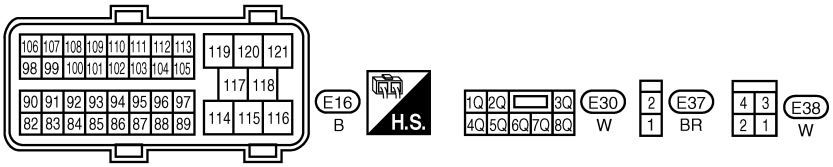

BBWA2531E

Specification data are reference values and are measured between each terminal and ground.

CAUTION:

Do not use ECM ground terminals when measuring input/output voltage. Doing so may result in damage to the ECM's transistor. Use a ground other than ECM terminals, such as the ground.

TERMINAL NO.	WIRE COLOR	ITEM	CONDITION	DATA (DC Voltage)
101	R/G	Stop lamp switch	**[Ignition switch: OFF]** • Brake pedal: Fully released	Approximately 0V
			[Ignition switch: OFF] • Brake pedal: Slightly depressed	BATTERY VOLTAGE (11 - 14V)
108	G/B	ASCD brake switch	**[Ignition switch: ON]** • Brake pedal: Fully released	BATTERY VOLTAGE (11 - 14V)
			[Ignition switch: ON] • Brake pedal: Slightly depressed	Approximately 0V

Diagnosis Procedure

INFOID:0000000001717621

1. CHECK OVERALL FUNCTION-I

With CONSULT-III

1. Turn ignition switch ON.
2. Select “BRAKE SW1” in “DATA MONITOR” mode with CONSULT-III.
3. Check “BRAKE SW1” indication under the following conditions.

CONDITION	INDICATION
Brake pedal: Slightly depressed	OFF
Brake pedal: Fully released	ON

Without CONSULT-III

1. Turn ignition switch ON.
2. Check voltage between ECM terminal 108 and ground under the following conditions.

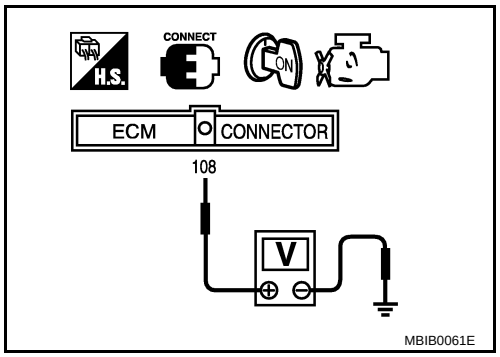

CONDITION	VOLTAGE
Brake pedal: Slightly depressed	Approximately 0V
Brake pedal: Fully released	Battery voltage

OK or NG

OK >> GO TO 2.
NG >> GO TO 3.

2. CHECK OVERALL FUNCTION-II

With CONSULT-III

Check “BRAKE SW2” indication in “DATA MONITOR” mode.

CONDITION	INDICATION
Brake pedal: Fully released	OFF
Brake pedal: Slightly depressed	ON

Without CONSULT-III

Check voltage between ECM terminal 101 and ground under the following conditions.

CONDITION	VOLTAGE
Brake pedal: Fully released	Approximately 0V
Brake pedal: Slightly depressed	Battery voltage

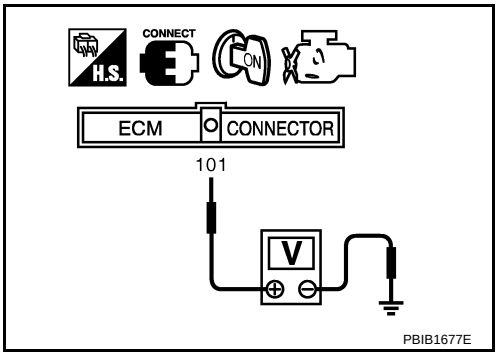

OK or NG

OK >> GO TO 11.
NG >> GO TO 7.

3. CHECK ASCD BRAKE SWITCH POWER SUPPLY CIRCUIT

1. Turn ignition switch OFF.
2. Disconnect ASCD brake switch harness connector.
3. Turn ignition switch ON.

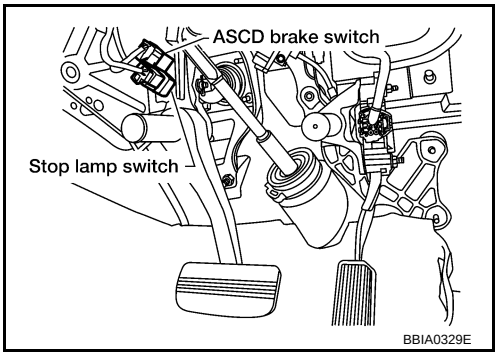

4. Check voltage between ASCD brake switch terminal 1 and ground with CONSULT-III or tester.

Voltage: Battery voltage

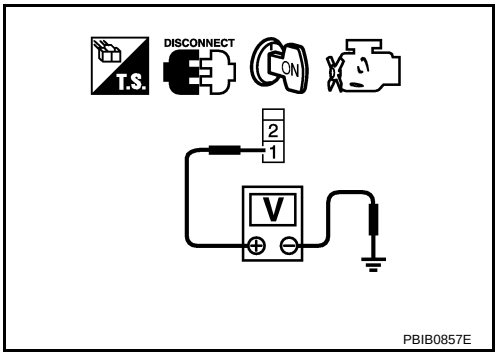

OK or NG

OK >> GO TO 5.
NG >> GO TO 4.

4. DETECT MALFUNCTIONING PART

Check the following.
- Fuse block (J/B) connector E30
- 10A fuse
- Harness for open or short between ASCD brake switch and fuse

>> Repair open circuit or short to ground or short to power in harness or connectors.

5. CHECK ASCD BRAKE SWITCH INPUT SIGNAL CIRCUIT FOR OPEN AND SHORT

1. Turn ignition switch OFF.
2. Disconnect ECM harness connector.
3. Check harness continuity between ECM terminal 108 and ASCD brake switch terminal 2. Refer to Wiring Diagram.

Continuity should exist.

4. Also check harness for short to ground and short to power.

OK or NG

OK >> GO TO 6.
NG >> Repair open circuit or short to ground or short to power in harness or connectors.

6. CHECK ASCD BRAKE SWITCH

Refer to EC-498, "Component Inspection"

OK or NG

OK >> GO TO 11.
NG >> Replace ASCD brake switch.

7. CHECK STOP LAMP SWITCH POWER SUPPLY CIRCUIT

1. Turn ignition switch OFF.
2. Disconnect stop lamp switch harness connector.

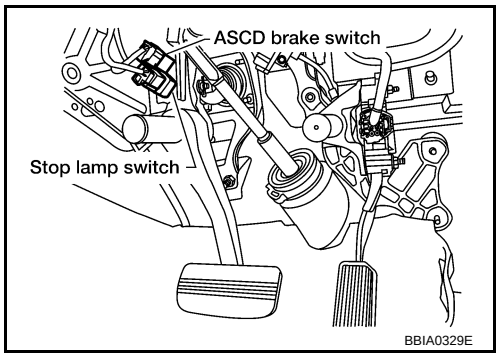

3. Check voltage between stop lamp switch terminal 1 and ground with CONSULT -II or tester.

Voltage: Battery voltage

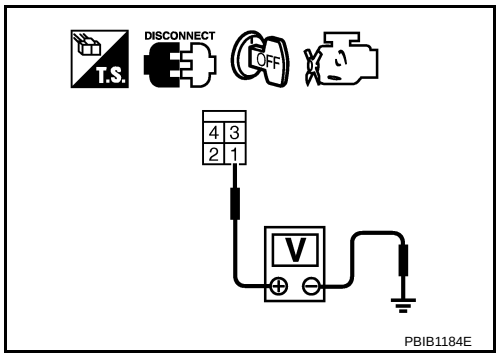

OK or NG

OK >> GO TO 9.
NG >> GO TO 8.

8. DETECT MALFUNCTIONING PART

Check the following.
- Fuse block (J/B) connector E30
- 10A fuse
- Harness for open or short between stop lamp switch and battery

>> Repair open circuit or short to ground or short to power in harness or connectors.

9. CHECK STOP LAMP SWITCH INPUT SIGNAL CIRCUIT FOR OPEN AND SHORT

1. Disconnect ECM harness connector.
2. Check harness continuity between ECM terminal 101 and stop lamp switch terminal 2. Refer to Wiring Diagram.

Continuity should exist.

3. Also check harness for short to ground and short to power.

OK or NG

OK >> GO TO 10.
NG >> Repair open circuit or short to ground or short to power in harness or connectors.

10. CHECK STOP LAMP SWITCH

Refer to EC-498, "Component Inspection"

OK or NG

OK >> GO TO 11.
NG >> Replace stop lamp switch.

11. CHECK INTERMITTENT INCIDENT

Refer to EC-130.

>> **INSPECTION END**

Component Inspection

INFOID:0000000001717622

ASCD BRAKE SWITCH

1. Turn ignition switch OFF.
2. Disconnect ASCD brake switch harness connector.
3. Check harness continuity between ASCD brake switch terminals 1 and 2 under the following conditions.

Condition	Continuity
Brake pedal: Fully released	Should exist
Brake pedal: Slightly depressed	Should not exist

If NG, adjust ASCD brake switch installation, refer to BR-5, and perform step 3 again.

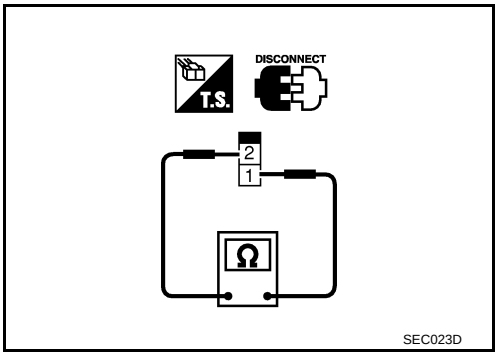

STOP LAMP SWITCH

1. Turn ignition switch OFF.
2. Disconnect stop lamp switch harness connector.
3. Check harness continuity between stop lamp switch terminals 1 and 2 under the following conditions.

Condition	Continuity
Brake pedal: Fully released	Should not exist
Brake pedal: Slightly depressed	Should exist

If NG, adjust stop lamp switch installation, refer to BR-5, and perform step 3 again.

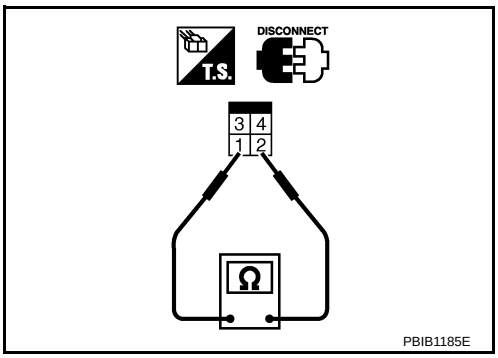

DTC P1574 ASCD VEHICLE SPEED SENSOR

Component Description

INFOID:0000000001717623

The ECM receives two vehicle speed sensor signals via CAN communication line. One is sent from combination meter and the other is from TCM (Transmission control module). The ECM uses these signals for ASCD control. Refer to EC-25 for ASCD functions.

On Board Diagnosis Logic

INFOID:0000000001717624

This self-diagnosis has the one trip detection logic.
The MIL will not light up for this diagnosis.
NOTE:
- **If DTC P1574 is displayed with DTC U1000 or U1001, first perform the trouble diagnosis for DTC U1000, U1001. Refer to EC-139.**
- **If DTC P1574 is displayed with DTC U1010, first perform the trouble diagnosis for DTC U1010. Refer to EC-141.**
- **If DTC P1574 is displayed with DTC P0500, first perform the trouble diagnosis for DTC P0500. Refer to EC-432.**
- **If DTC P1574 is displayed with DTC P0605, first perform the trouble diagnosis for DTC P0605. Refer to EC-447.**

DTC No.	Trouble Diagnosis Name	DTC Detecting Condition	Possible Cause
P1574 1574	ASCD vehicle speed sensor	ECM detects a difference between two vehicle speed signals is out of the specified range.	• Harness or connectors (The CAN communication line is open or shorted.) • ABS actuator and electric unit (control unit) • Wheel sensor • TCM • ECM

DTC Confirmation Procedure

INFOID:0000000001717625

CAUTION:
Always drive vehicle at a safe speed.
NOTE:
If DTC Confirmation Procedure has been previously conducted, always perform the following before conducting the next step.
1. Turn ignition switch OFF and wait at least 10 seconds.
2. Turn ignition switch ON.
3. Turn ignition switch OFF and wait at least 10 seconds.

TESTING CONDITION:
Step 3 may be conducted with the drive wheels lifted in the shop or by driving the vehicle. If a road test is expected to be easier, it is unnecessary to lift the vehicle.

1. Start engine (TCS switch or VDC switch OFF).
2. Drive the vehicle at more than 40 km/h (25 MPH).
3. Check DTC.
4. If DTC is detected, go to EC-499, "Diagnosis Procedure".

Diagnosis Procedure

INFOID:0000000001717626

1. CHECK DTC WITH TCM

Check DTC with TCM. Refer to AT-36, "OBD-II Diagnostic Trouble Code (DTC)".

OK or NG

OK >> GO TO 2.
NG >> Perform trouble shooting relevant to DTC indicated.

2. CHECK DTC WITH “ABS ACTUATOR AND ELECTRIC UNIT (CONTROL UNIT)”

Refer to BRC-10 or BRC-50.

OK or NG

OK >> **INSPECTION END**
NG >> Repair or replace.

DTC P1800 VIAS CONTROL SOLENOID VALVE

Component Description

INFOID:0000000001717627

The VIAS control solenoid valve (2) cuts the intake manifold vacuum signal for power valve control. It responds to ON/OFF signals from the ECM. When the solenoid is off, the vacuum signal from the intake manifold is cut. When the ECM sends an ON signal the coil pulls the plunger downward and feeds the vacuum signal to the power valve actuator (1).

- ⇦: Vehicle front

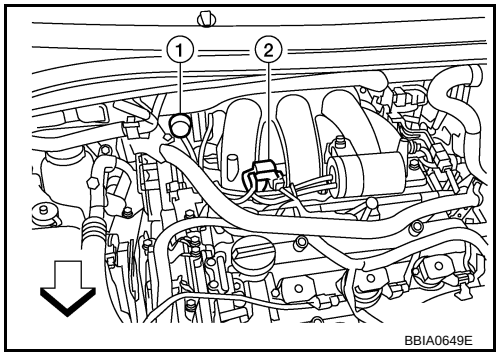

CONSULT-III Reference Value in Data Monitor Mode

INFOID:0000000001717628

Specification data are reference values.

MONITOR ITEM	CONDITION		SPECIFICATION
VIAS S/V-1	• Engine: After warming up	1,800 - 3,600 rpm	ON
		Except above conditions	OFF

On Board Diagnosis Logic

INFOID:0000000001717629

The MIL will not light up for this self-diagnosis.

DTC No.	Trouble diagnosis name	DTC detecting condition	Possible cause
P1800 1800	VIAS control solenoid valve circuit	An excessively low or high voltage signal is sent to ECM through the valve	• Harness or connectors (The solenoid valve circuit is open or shorted.) • VIAS control solenoid valve

DTC Confirmation Procedure

INFOID:0000000001717630

NOTE:
If DTC Confirmation Procedure has been previously conducted, always perform the following before conducting the next step.
1. Turn ignition switch OFF and wait at least 10 seconds.
2. Turn ignition switch ON.
3. Turn ignition switch OFF and wait at least 10 seconds.

TESTING CONDITION:
Before performing the following procedure, confirm that battery voltage is between 11V at idle.

1. Start engine and let it idle for at least 5 seconds.
2. Check 1st trip DTC.
3. If 1st trip DTC is detected, go to EC-503, "Diagnosis Procedure".

Wiring Diagram

INFOID:0000000001717631

EC-VIAS/V-01

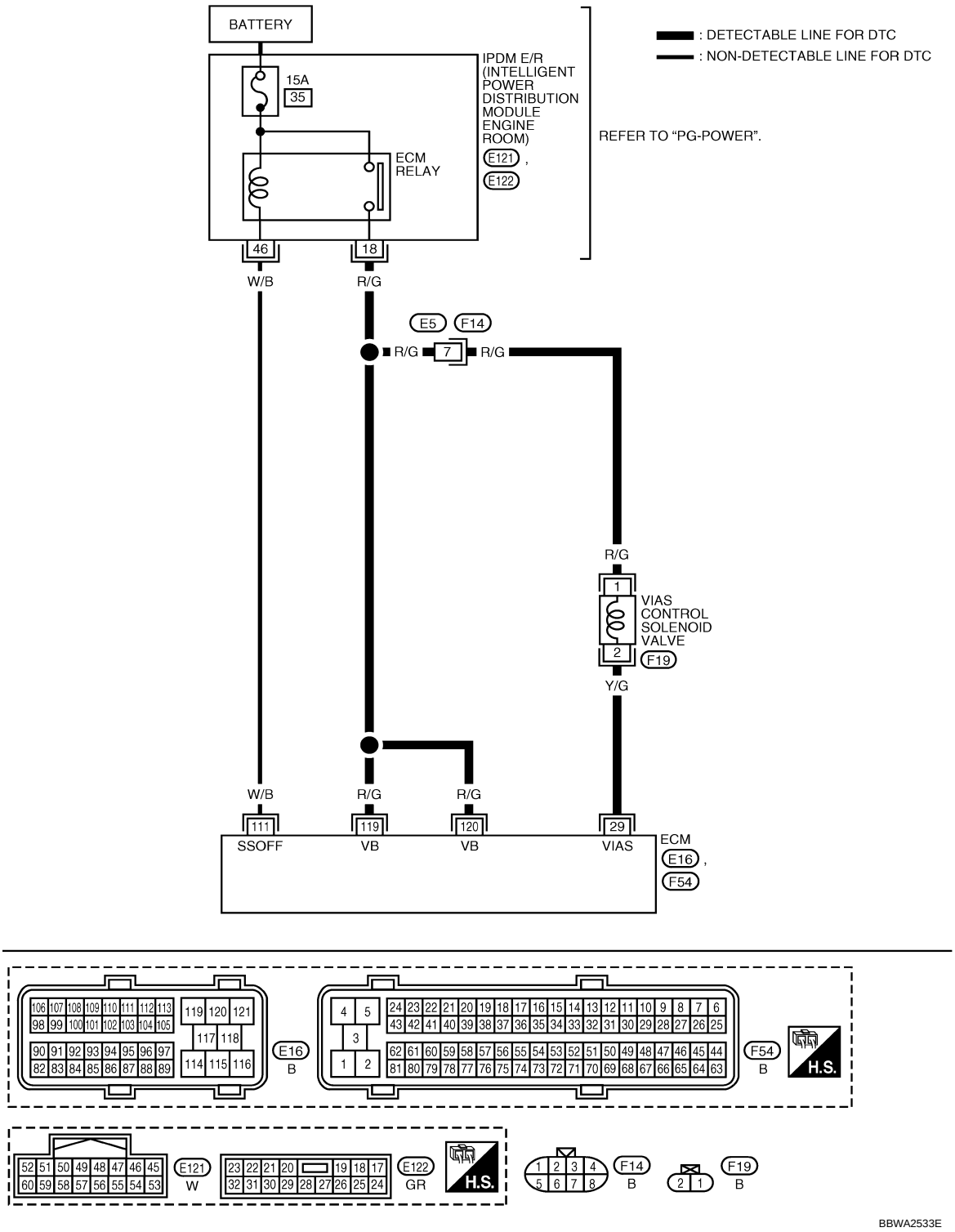

Specification data are reference values and are measured between each terminal and ground.

CAUTION:

Do not use ECM ground terminals when measuring input/output voltage. Doing so may result in damage to the ECM's transistor. Use a ground other than ECM terminals, such as the ground.

TERMINAL NO.	WIRE COLOR	ITEM	CONDITION	DATA (DC Voltage)
29	Y/G	VIAS control solenoid valve	**[Engine is running]** • Idle speed	BATTERY VOLTAGE (11 - 14V)
			[Engine is running] • Engine speed: Between 1,800 and 3,600 rpm.	0 - 1.0V
111	W/B	ECM relay (Self shut-off)	**[Engine is running]** **[Ignition switch: OFF]** • For a few seconds after turning ignition switch OFF	0 - 1.5V
			[Ignition switch: OFF] • More than a few seconds after turning ignition switch OFF	BATTERY VOLTAGE (11 - 14V)
119 120	R/G R/G	Power supply for ECM	**[Ignition switch: ON]**	BATTERY VOLTAGE (11 - 14V)

Diagnosis Procedure

INFOID:0000000001717632

1. CHECK VIAS CONTROL SOLENOID VALVE POWER SUPPLY CIRCUIT

1. Turn ignition switch OFF.
2. Disconnect VIAS control solenoid valve harness connector (2).
3. Turn ignition switch ON.

- ⇦: Vehicle front
- Power valve actuator (1)

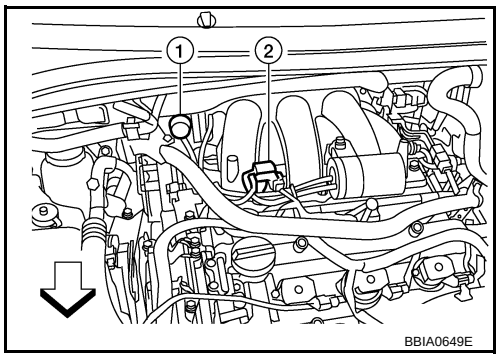

4. Check voltage between VIAS control solenoid valve terminal 1 and ground with CONSULT-III or tester.

Voltage: Battery voltage

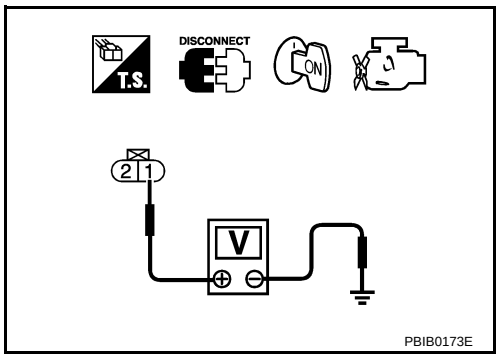

OK or NG

OK >> GO TO 3.
NG >> GO TO 2.

2. DETECT MALFUNCTIONING PART

Check the following.
- Harness connectors E5, F14
- Harness for open or short between VIAS control solenoid valve and IPDM E/R
- Harness for open or short between VIAS control solenoid valve and ECM

>> Repair harness or connectors.

3. CHECK VIAS CONTROL SOLENOID VALVE OUTPUT SIGNAL CIRCUIT FOR OPEN AND SHORT

1. Turn ignition switch OFF.

2. Disconnect ECM harness connector.
3. Check harness continuity between ECM terminal 29 and VIAS control solenoid valve terminal 2. Refer to Wiring Diagram.

Continuity should exist.

4. Also check harness for short to ground and short to power.

OK or NG

OK >> GO TO 4.
NG >> Repair open circuit or short to ground or short to power in harness or connectors.

4. CHECK VIAS CONTROL SOLENOID VALVE

Refer to EC-504, "Component Inspection".

OK or NG

OK >> GO TO 5.
NG >> Replace VIAS control solenoid valve.

5. CHECK INTERMITTENT INCIDENT

Refer to EC-130.

>> **INSPECTION END**

Component Inspection

INFOID:0000000001717633

VIAS CONTROL SOLENOID VALVE

With CONSULT-III

1. Reconnect all harness connectors disconnected.
2. Turn ignition switch ON.
3. Perform “VIAS S/V-1” in “ACTIVE TEST” mode.
4. Check air passage continuity and operation delay time under the following conditions.

Condition VIAS S/V-1	Air passage continuity between A and B	Air passage continuity between A and C
ON	Yes	No
OFF	No	Yes

Operation takes less than 1 second.

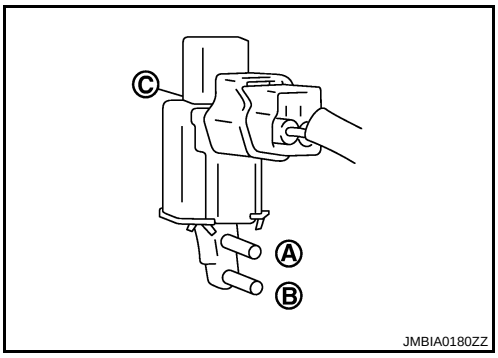

Without CONSULT-III

Check air passage continuity and operation delay time under the following conditions.

Condition	Air passage continuity between A and B	Air passage continuity between A and C
12V direct current supply between terminals 1 and 2	Yes	No
No supply	No	Yes

Operation takes less than 1 second.

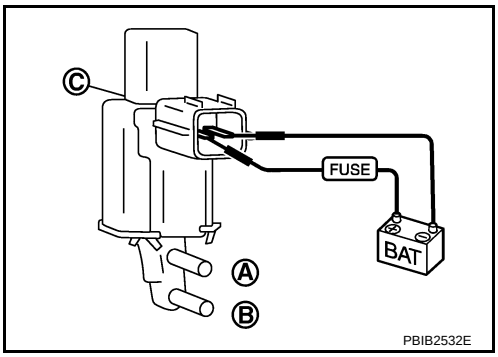

Removal and Installation

INFOID:0000000001717634

VIAS CONTROL SOLENOID VALVE

Refer to EM-23.

DTC P1805 BRAKE SWITCH

Description

INFOID:0000000001717635

Brake switch signal is applied to the ECM through the stop lamp switch when the brake pedal is depressed. This signal is used mainly to decrease the engine speed when the vehicle is driving.

CONSULT-III Reference Value in Data Monitor Mode

INFOID:0000000001717636

Specification data are reference values.

MONITOR ITEM	CONDITION		SPECIFICATION
BRAKE SW	• Ignition switch: ON	Brake pedal: Fully released	OFF
		Brake pedal: Slightly depressed	ON

On Board Diagnosis Logic

INFOID:0000000001717637

The MIL will not light up for this diagnosis.

DTC No.	Trouble diagnosis name	DTC detecting condition	Possible cause
P1805 1805	Brake switch	A brake switch signal is not sent to ECM for extremely long time while the vehicle is driving.	• Harness or connectors (Stop lamp switch circuit is open or shorted.) • Stop lamp switch

FAIL-SAFE MODE

When the malfunction is detected, the ECM enters fail-safe mode.

Engine operating condition in fail-safe mode	
ECM controls the electric throttle control actuator by regulating the throttle opening to a small range. Therefore, acceleration will be poor.	
Vehicle condition	Driving condition
When engine is idling	Normal
When accelerating	Poor acceleration

DTC Confirmation Procedure

INFOID:0000000001717638

1. Turn ignition switch ON.
2. Fully depress the brake pedal for at least 5 seconds.
3. Erase the DTC.
4. Check 1st trip DTC.
5. If 1st trip DTC is detected, go to EC-508, "Diagnosis Procedure".

Wiring Diagram

INFOID:0000000001717639

EC-BRK/SW-01

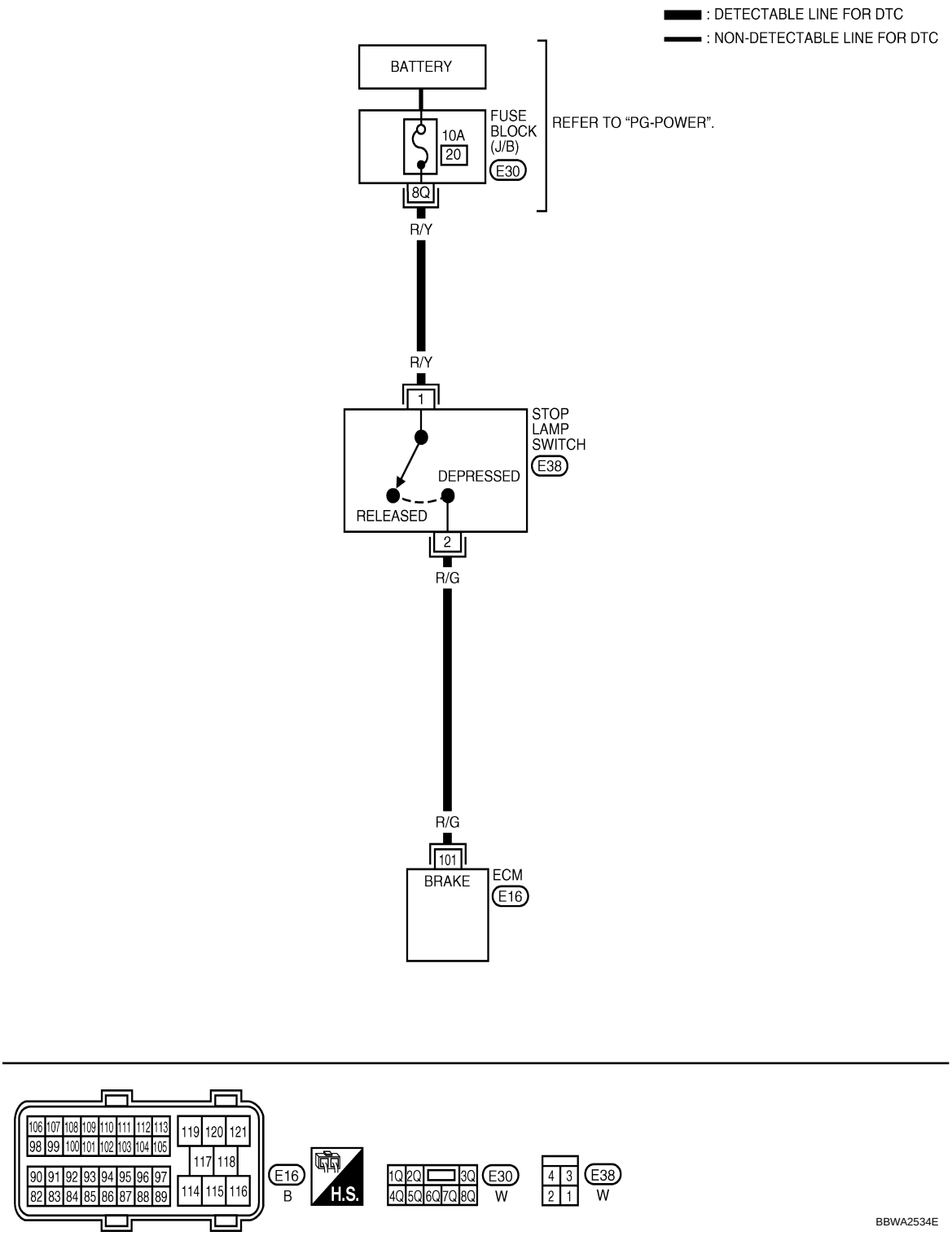

Specification data are reference values and are measured between each terminal and ground.

CAUTION:

Do not use ECM ground terminals when measuring input/output voltage. Doing so may result in damage to the ECM's transistor. Use a ground other than ECM terminals, such as the ground.

TERMINAL NO.	WIRE COLOR	ITEM	CONDITION	DATA (DC Voltage)
101	R/G	Stop lamp switch	**[Ignition switch: OFF]** • Brake pedal: Fully released	Approximately 0V
			[Ignition switch: OFF] • Brake pedal: Slightly depressed	BATTERY VOLTAGE (11 - 14V)

Diagnosis Procedure

INFOID:0000000001717640

1. CHECK STOP LAMP SWITCH CIRCUIT

1. Turn ignition switch OFF.
2. Check the stop lamp when depressing and releasing the brake pedal.

Brake pedal	Stop lamp
Fully released	Not illuminated
Slightly depressed	Illuminated

OK or NG

OK >> GO TO 4.
NG >> GO TO 2.

2. CHECK STOP LAMP SWITCH POWER SUPPLY CIRCUIT

1. Disconnect stop lamp switch harness connector.

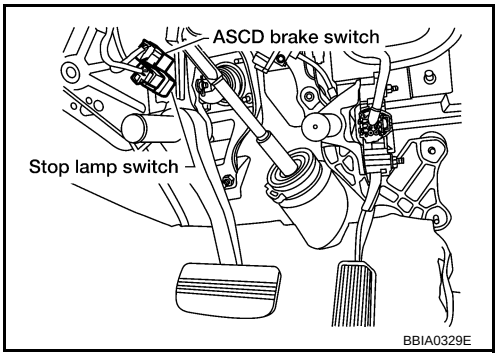

2. Check voltage between stop lamp switch terminal 1 and ground with CONSULT-III or tester.

Voltage: Battery voltage

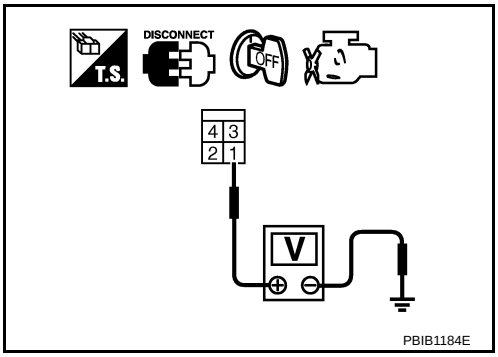

OK or NG

OK >> GO TO 4.
NG >> GO TO 3.

3. DETECT MALFUNCTIONING PART

Check the following.
- 10A fuse
- Fuse block (J/B) connector E30
- Harness for open and short between stop lamp switch and battery

>> Repair open circuit or short to ground or short to power in harness or connectors.

4. CHECK STOP LAMP SWITCH INPUT SIGNAL CIRCUIT FOR OPEN AND SHORT

1. Disconnect ECM harness connector.
2. Check harness continuity between ECM terminal 101 and stop lamp switch terminal 2. Refer to Wiring Diagram.

Continuity should exist.

3. Also check harness for short to ground and short to power.

OK or NG

OK >> GO TO 5.
NG >> Repair open circuit or short to ground or short to power in harness or connectors.

5. CHECK STOP LAMP SWITCH

Refer to EC-509, "Component Inspection".

OK or NG

OK >> GO TO 6.
NG >> Replace stop lamp switch.

6. CHECK INTERMITTENT INCIDENT

Refer to EC-130.

>> **INSPECTION END**

Component Inspection

INFOID:0000000001717641

STOP LAMP SWITCH

1. Disconnect stop lamp switch harness connector.

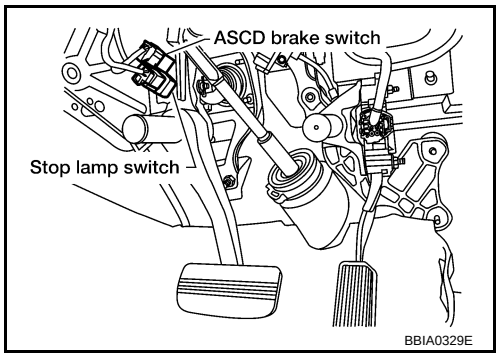

2. Check continuity between stop lamp switch terminals 1 and 2 under the following conditions.

Conditions	Continuity
Brake pedal: Fully released	Should not exist
Brake pedal: Slightly depressed	Should exist

3. If NG, adjust stop lamp switch installation, refer to BR-5, and perform step 2 again.

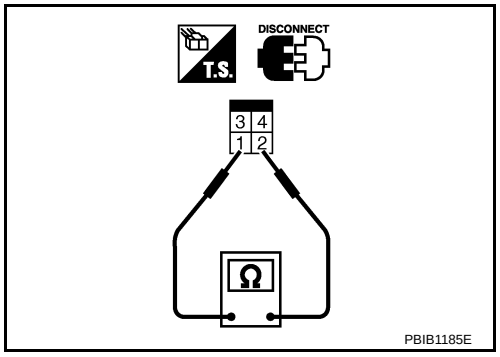

DTC P2100, P2103 THROTTLE CONTROL MOTOR RELAY

Component Description

INFOID:0000000001717642

Power supply for the throttle control motor is provided to the ECM via throttle control motor relay. The throttle control motor relay is ON/OFF controlled by the ECM. When the ignition switch is turned ON, the ECM sends an ON signal to throttle control motor relay and battery voltage is provided to the ECM. When the ignition switch is turned OFF, the ECM sends an OFF signal to throttle control motor relay and battery voltage is not provided to the ECM.

CONSULT-III Reference Value in Data Monitor Mode

INFOID:0000000001717643

Specification data are reference values.

MONITOR ITEM	CONDITION	SPECIFICATION
THRTL RELAY	• Ignition switch: ON	ON

On Board Diagnosis Logic

INFOID:0000000001717644

These self-diagnoses have the one trip detection logic.

DTC No.	Trouble diagnosis name	DTC detecting condition	Possible cause
P2100 2100	Throttle control motor relay circuit open	ECM detects a voltage of power source for throttle control motor is excessively low.	• Harness or connectors (Throttle control motor relay circuit is open) • Throttle control motor relay
P2103 2103	Throttle control motor relay circuit short	ECM detects the throttle control motor relay is stuck ON.	• Harness or connectors (Throttle control motor relay circuit is shorted) • Throttle control motor relay

FAIL-SAFE MODE

When the malfunction is detected, ECM enters fail-safe mode and the MIL lights up.

Engine operating condition in fail-safe mode
ECM stops the electric throttle control actuator control, throttle valve is maintained at a fixed opening (approx. 5 degrees) by the return spring.

DTC Confirmation Procedure

INFOID:0000000001717645

NOTE:
If DTC Confirmation Procedure has been previously conducted, always perform the following before conducting the next step.
1. Turn ignition switch OFF and wait at least 10 seconds.
2. Turn ignition switch ON.
3. Turn ignition switch OFF and wait at least 10 seconds.

PROCEDURE FOR DTC P2100

1. Turn ignition switch ON and wait at least 2 seconds.
2. Start engine and let it idle for 5 seconds.
3. Check DTC.
4. If DTC is detected, go to EC-512, "Diagnosis Procedure".

PROCEDURE FOR DTC P2103

TESTING CONDITION:
Before performing the following procedure, confirm that battery voltage is more than 8V.

1. Turn ignition switch ON and wait at least 1 second.
2. Check DTC.
3. If DTC is detected, go to EC-512, "Diagnosis Procedure".

Wiring Diagram

INFOID:0000000001717646

EC-ETC2-01

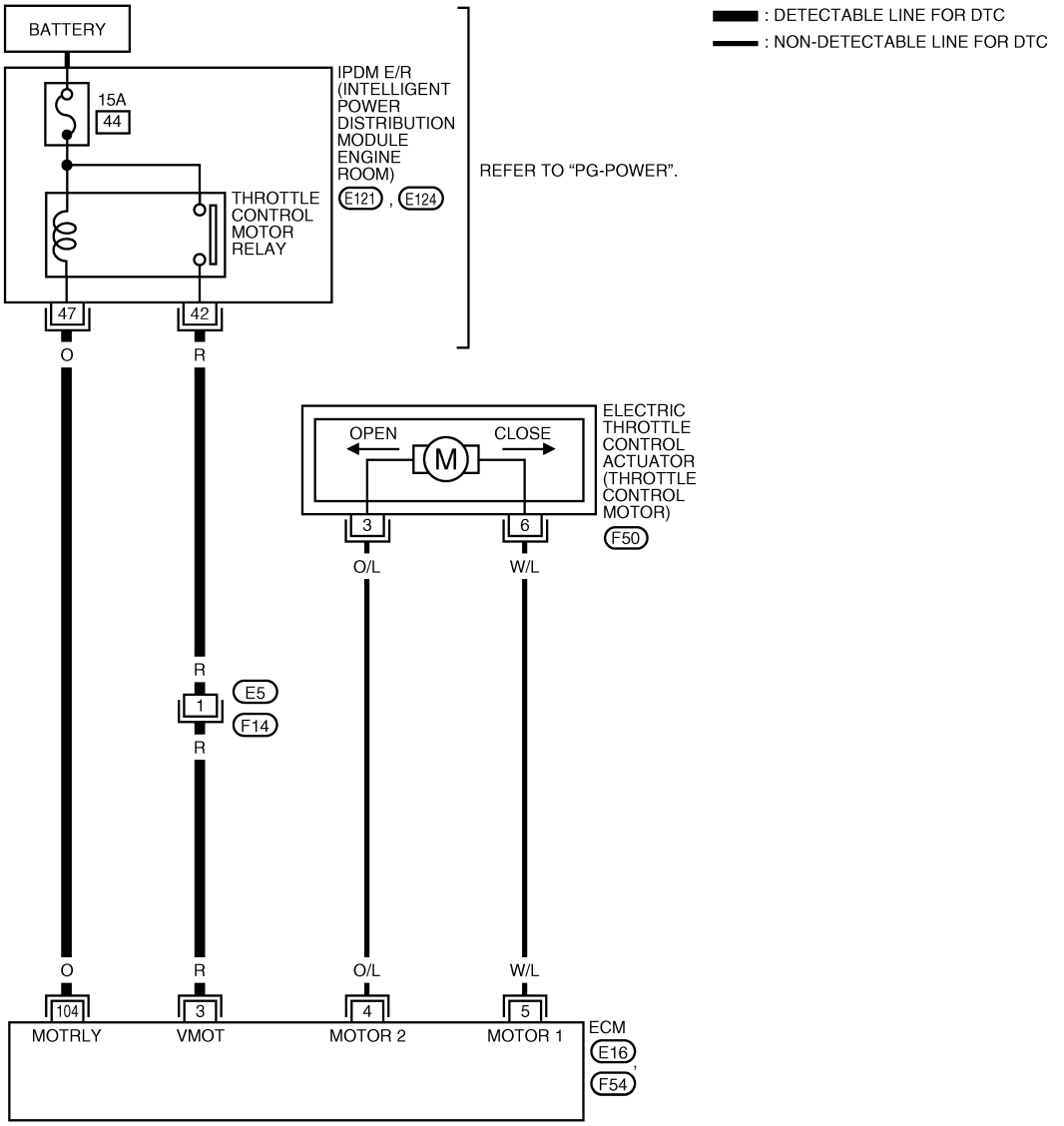

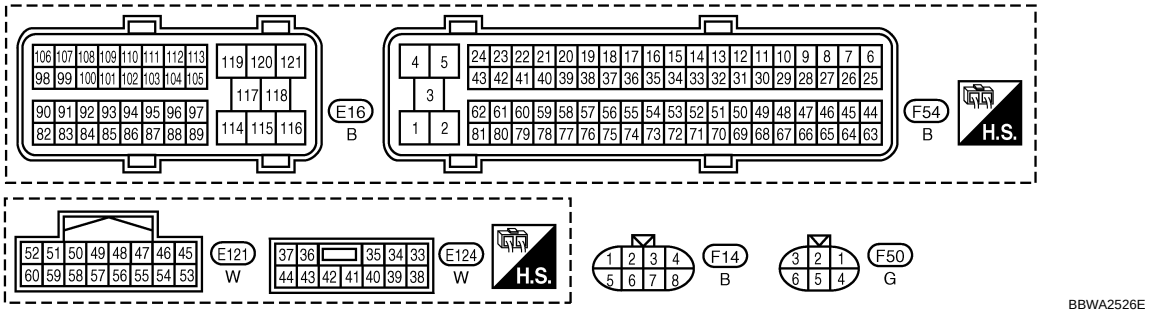

Specification data are reference values and are measured between each terminal and ground.
Pulse signal is measured by CONSULT-III.

CAUTION:

Do not use ECM ground terminals when measuring input/output voltage. Doing so may result in damage to the ECM's transistor. Use a ground other than ECM terminals, such as the ground.

TERMINAL NO.	WIRE COLOR	ITEM	CONDITION	DATA (DC Voltage)
3	R	Throttle control motor relay power supply	**[Ignition switch: ON]**	BATTERY VOLTAGE (11 - 14V)
4	O/L	Throttle control motor (Close)	**[Ignition switch: ON]** • Engine stopped • Shift lever: D • Accelerator pedal: Fully released	0 - 14V★ 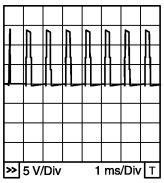 PBIB1104E
5	W/L	Throttle control motor (Open)	**[Ignition switch: ON]** • Engine stopped • Shift lever: D • Accelerator pedal: Fully depressed	0 - 14V★ 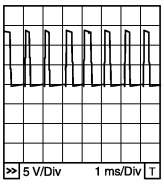 PBIB1105E
104	O	Throttle control motor relay	**[Ignition switch: OFF]**	BATTERY VOLTAGE (11 - 14V)
			[Ignition switch: ON]	0 - 1.0V

★: Average voltage for pulse signal (Actual pulse signal can be confirmed by oscilloscope.)

Diagnosis Procedure

INFOID:0000000001717647

1. CHECK THROTTLE CONTROL MOTOR RELAY POWER SUPPLY CIRCUIT-I

1. Turn ignition switch OFF.
2. Check voltage between ECM terminal 104 and ground with CONSULT-III or tester.

Voltage: Battery voltage

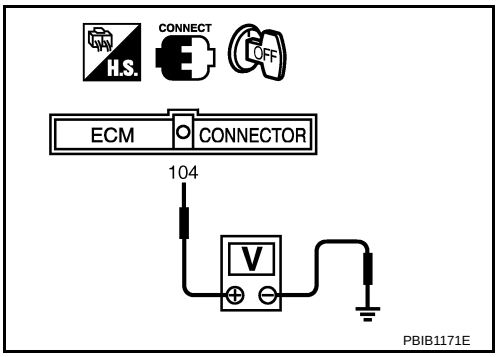

OK or NG

OK >> GO TO 4.
NG >> GO TO 2.

2. CHECK THROTTLE CONTROL MOTOR RELAY POWER SUPPLY CIRCUIT-II

1. Disconnect ECM harness connector.
2. Disconnect IPDM E/R harness connector E121.
3. Check continuity between ECM terminal 104 and IPDM E/R terminal 47.
   Refer to Wiring Diagram.

Continuity should exist.

4. Also check harness for short to ground and short to power.

OK or NG

OK >> GO TO 3.
NG >> Repair open circuit or short to ground or short to power in harness or connectors.

3. CHECK FUSE

1. Disconnect 15A fuse.
2. Check 15A fuse for blown.

OK or NG

OK >> GO TO 7.
NG >> Replace 15A fuse.

4. CHECK THROTTLE CONTROL MOTOR RELAY INPUT SIGNAL CIRCUIT-I

Check voltage between ECM terminal 3 and ground under the following conditions with CONSULT-III or tester.

Ignition switch	Voltage
OFF	Approximately 0V
ON	Battery voltage (11 - 14V)

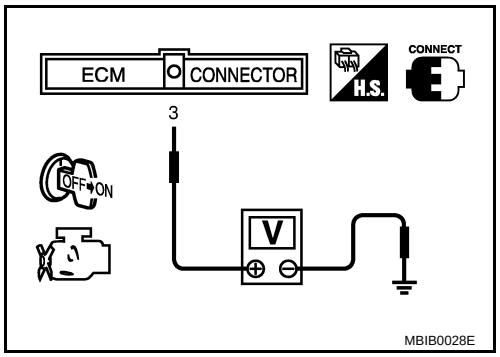

OK or NG

OK >> GO TO 7.
NG >> GO TO 5.

5. CHECK THROTTLE CONTROL MOTOR RELAY INPUT SIGNAL CIRCUIT-II

1. Turn ignition switch OFF.
2. Disconnect ECM harness connector.
3. Disconnect IPDM E/R harness connector E124.
4. Check continuity between ECM terminal 3 and IPDM E/R terminal 42.
   Refer to Wiring Diagram.

   Continuity should exist.

5. Also check harness for short to ground and short to power.

OK or NG

OK >> GO TO 7.
NG >> GO TO 6.

6. DETECT MALFUNCTIONING PART

Check the following.
- Harness connectors E5, F14
- Harness for open or short between ECM and IPDM E/R

>> Repair open circuit or short to ground or short to power in harness or connectors.

7. CHECK INTERMITTENT INCIDENT

Refer to EC-130.

OK or NG

OK >> Replace IPDM E/R. Refer to PG-17.
NG >> Repair or replace harness or connectors.

DTC P2101 ELECTRIC THROTTLE CONTROL FUNCTION

Description

INFOID:0000000001717648

NOTE:
If DTC P2101 is displayed with DTC P2100 or P2119, first perform the trouble diagnosis for DTC P2100 or P2119. Refer to EC-510 or EC-526.
Electric throttle control actuator consists of throttle control motor, throttle position sensor, etc.
The throttle control motor is operated by the ECM and it opens and closes the throttle valve.
The current opening angle of the throttle valve is detected by the throttle position sensor and it provides feedback to the ECM to control the throttle control motor to make the throttle valve opening angle properly in response to driving condition.

On Board Diagnosis Logic

INFOID:0000000001717649

This self-diagnosis has the one trip detection logic.

DTC No.	Trouble diagnosis name	DTC detecting condition	Possible cause
P2101 2101	Electric throttle control performance	Electric throttle control function does not operate properly.	• Harness or connectors (Throttle control motor circuit is open or shorted) • Electric throttle control actuator

FAIL-SAFE MODE

When the malfunction is detected, ECM enters fail-safe mode and the MIL lights up.

Engine operating condition in fail-safe mode
ECM stops the electric throttle control actuator control, throttle valve is maintained at a fixed opening (approx. 5 degrees) by the return spring.

DTC Confirmation Procedure

INFOID:0000000001717650

TESTING CONDITION:
- **Before performing the following procedure, confirm that battery voltage is more than 11V at idle.**

1. If DTC Confirmation Procedure has been previously conducted, always perform the following before conducting the next step.

a. Turn ignition switch OFF and wait at least 10 seconds.
b. Turn ignition switch ON.
c. Turn ignition switch OFF and wait at least 10 seconds.

2. Start engine and let it idle for 5 seconds.
3. Check DTC.
4. If DTC is detected, go to EC-516, "Diagnosis Procedure".

Wiring Diagram

INFOID:0000000001717651

EC-ETC1-01

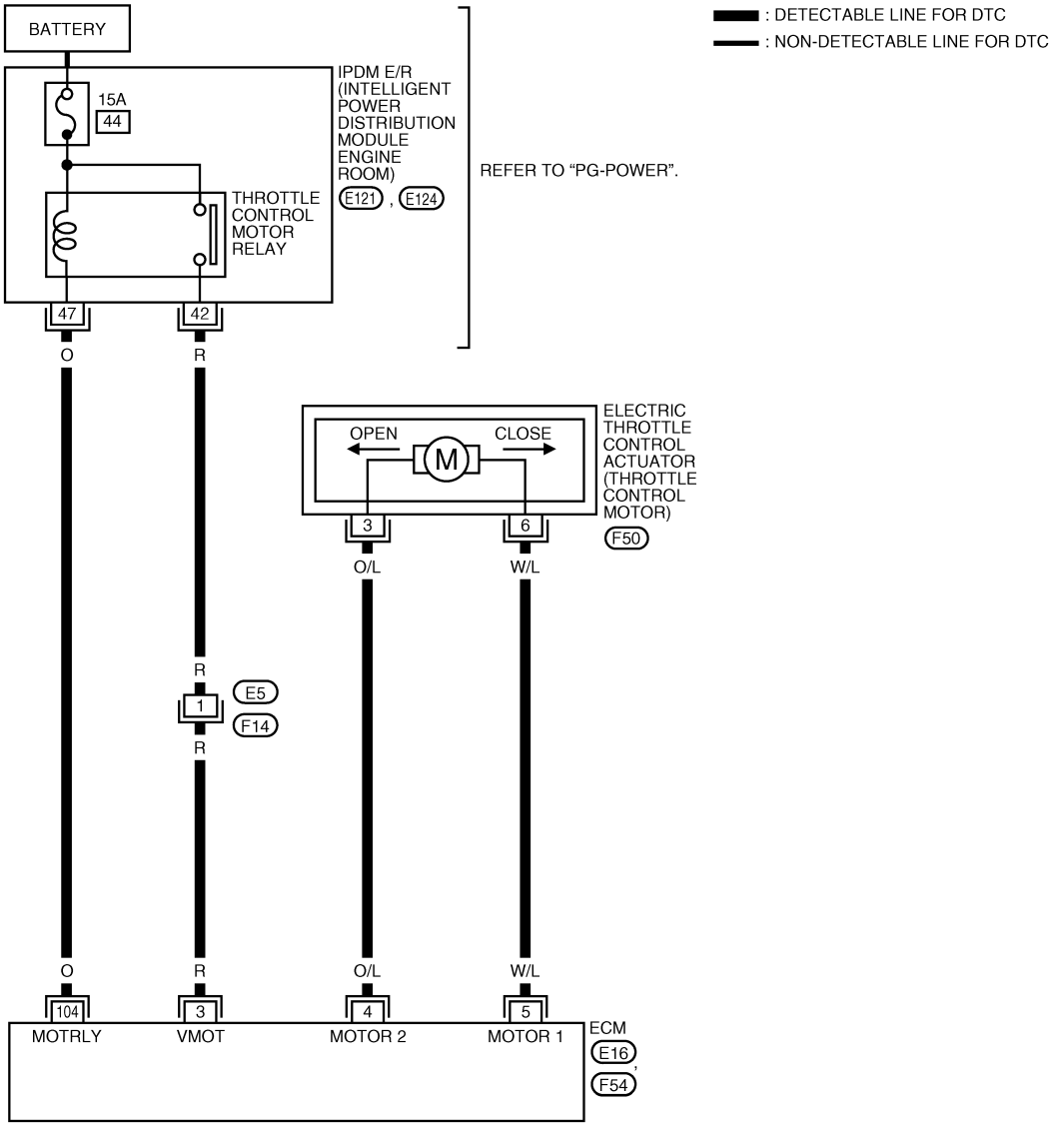

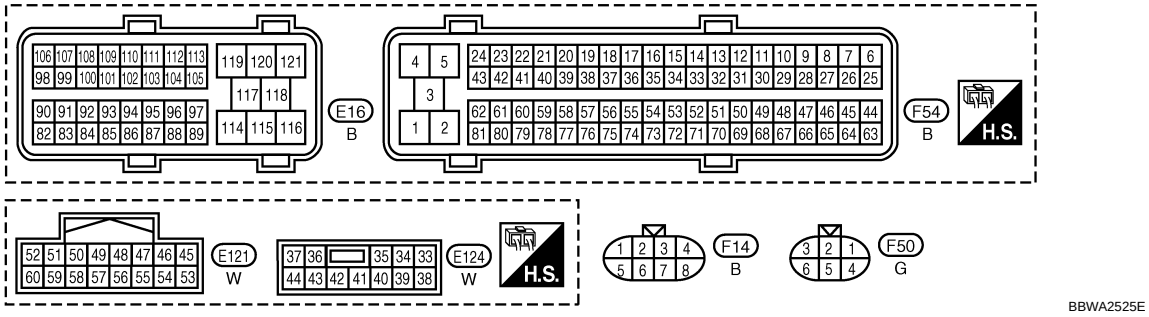

Specification data are reference values and are measured between each terminal and ground.
Pulse signal is measured by CONSULT-III.

CAUTION:

Do not use ECM ground terminals when measuring input/output voltage. Doing so may result in damage to the ECM's transistor. Use a ground other than ECM terminals, such as the ground.

TERMINAL NO.	WIRE COLOR	ITEM	CONDITION	DATA (DC Voltage)
3	R	Throttle control motor relay power supply	**[Ignition switch: ON]**	BATTERY VOLTAGE (11 - 14V)
4	O/L	Throttle control motor (Close)	**[Ignition switch: ON]** • Engine stopped • Shift lever: D • Accelerator pedal: Fully released	0 - 14V★ 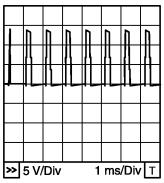 PBIB1104E
5	W/L	Throttle control motor (Open)	**[Ignition switch: ON]** • Engine stopped • Shift lever: D • Accelerator pedal: Fully depressed	0 - 14V★ 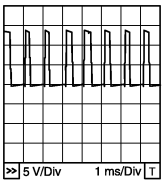 PBIB1105E
104	O	Throttle control motor relay	**[Ignition switch: OFF]**	BATTERY VOLTAGE (11 - 14V)
			[Ignition switch: ON]	0 - 1.0V

★: Average voltage for pulse signal (Actual pulse signal can be confirmed by oscilloscope.)

Diagnosis Procedure

INFOID:0000000001717652

1. CHECK GROUND CONNECTIONS

1. Turn ignition switch OFF.
2. Loosen and retighten three ground screws on the body. Refer to EC-138, "Ground Inspection".

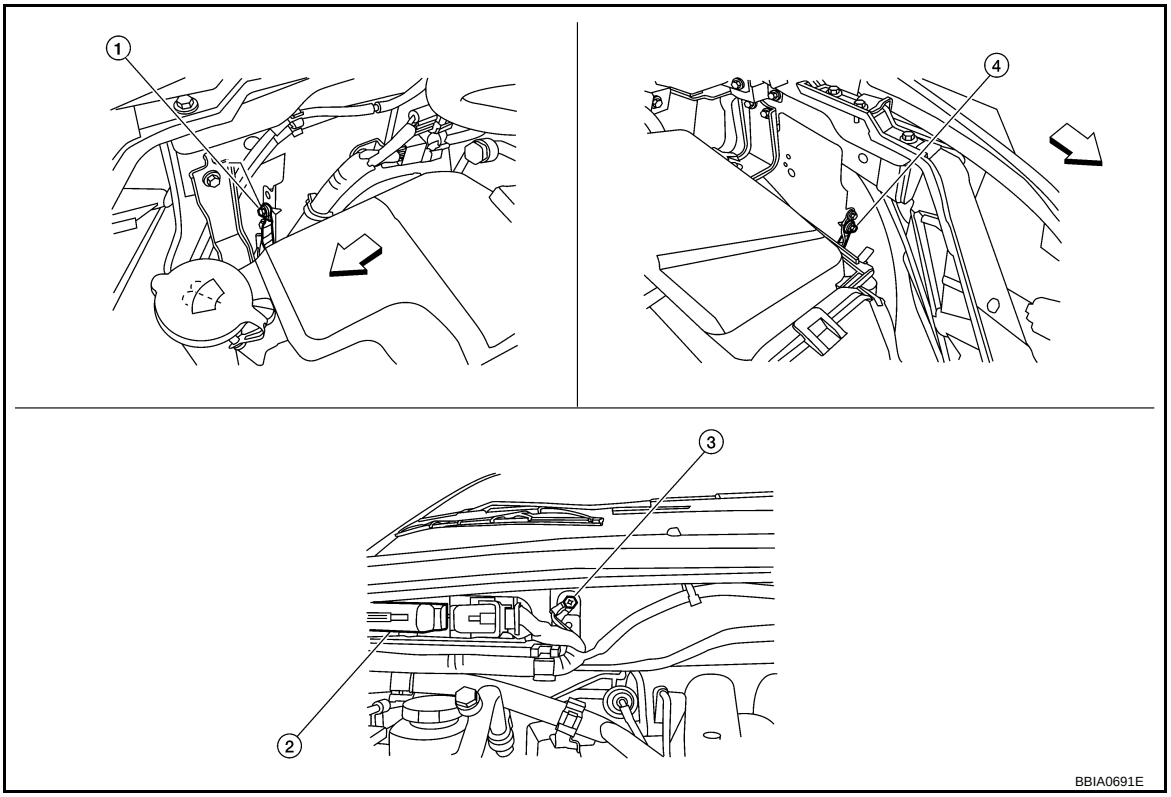

⇦ Vehicle front

1. Body ground E24
2. ECM
3. Body ground E9
4. Body ground E15

OK or NG

OK >> GO TO 2.
NG >> Repair or replace ground connections.

2. CHECK THROTTLE CONTROL MOTOR RELAY INPUT SIGNAL CIRCUIT-I

Check voltage between ECM terminal 3 and ground under the following conditions with CONSULT-III or tester.

Ignition switch	Voltage
OFF	Approximately 0V
ON	Battery voltage (11 - 14V)

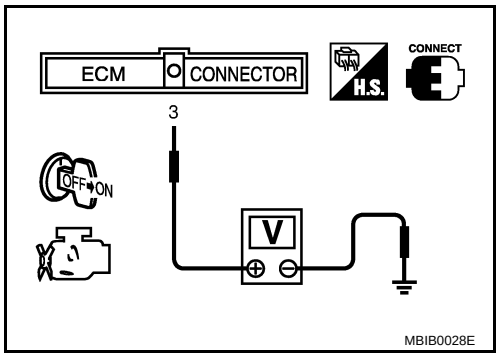

OK or NG

OK >> GO TO 9.
NG >> GO TO 3.

3. CHECK THROTTLE CONTROL MOTOR RELAY POWER SUPPLY CIRCUIT-I

1. Turn ignition switch OFF.

2. Check voltage between ECM terminal 104 and ground with CONSULT-III or tester.

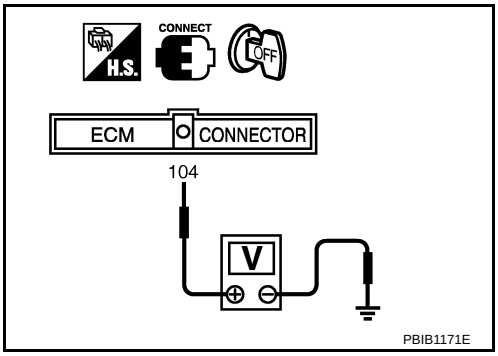

Voltage: Battery voltage

OK or NG

OK >> GO TO 6.
NG >> GO TO 4.

4. CHECK THROTTLE CONTROL MOTOR RELAY POWER SUPPLY CIRCUIT-II

1. Disconnect ECM harness connector.
2. Disconnect IPDM E/R harness connector E121.
3. Check continuity between ECM terminal 104 and IPDM E/R terminal 47.
   Refer to Wiring Diagram.

Continuity should exist.

4. Also check harness for short to ground and short to power.

OK or NG

OK >> GO TO 5.
NG >> Repair open circuit or short to ground or short to power in harness or connectors.

5. CHECK FUSE

1. Disconnect 15A fuse.
2. Check 15A fuse for blown.

OK or NG

OK >> GO TO 8.
NG >> Replace 15A fuse.

6. CHECK THROTTLE CONTROL MOTOR RELAY INPUT SIGNAL CIRCUIT-II

1. Disconnect ECM harness connector.
2. Disconnect IPDM E/R harness connector E124.
3. Check continuity between ECM terminal 3 and IPDM E/R terminal 42.
   Refer to Wiring Diagram.

Continuity should exist.

4. Also check harness for short to ground and short to power.

OK or NG

OK >> GO TO 8.
NG >> GO TO 7.

7. DETECT MALFUNCTIONING PART

Check the following.
- Harness connectors E5, F14
- Harness for open or short between ECM and IPDM E/R

>> Repair open circuit or short to ground or short to power in harness or connectors.

8. CHECK INTERMITTENT INCIDENT

Refer to EC-130.

OK or NG

OK >> Replace IPDM E/R. Refer to PG-17.
NG >> Repair or replace harness or connectors.

9. CHECK THROTTLE CONTROL MOTOR OUTPUT SIGNAL CIRCUIT FOR OPEN OR SHORT

1. Turn ignition switch OFF.
2. Disconnect electric throttle control actuator harness connector.
3. Disconnect ECM harness connector.
4. Check harness continuity between the following terminals. Refer to Wiring Diagram.

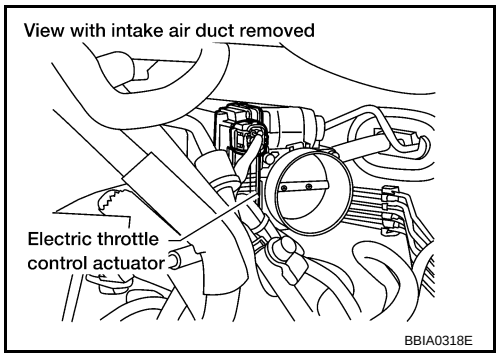

Electric throttle control actuator terminal	ECM terminal	Continuity
3	5	Should not exist
	4	Should exist
6	5	Should exist
	4	Should not exist

5. Also check harness for short to ground and short to power.

OK or NG

OK >> GO TO 10.
NG >> Repair or replace.

10. CHECK ELECTRIC THROTTLE CONTROL ACTUATOR VISUALLY

1. Remove the intake air duct.
2. Check if foreign matter is caught between the throttle valve and the housing.

OK or NG

OK >> GO TO 11.
NG >> Remove the foreign matter and clean the electric throttle control actuator inside.

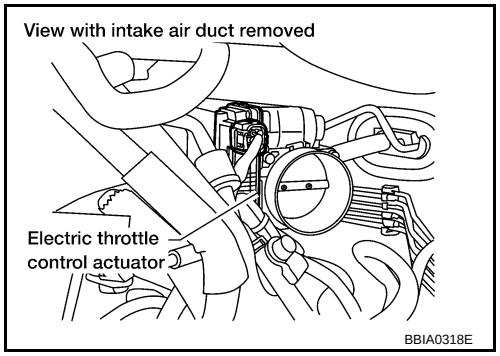

11. CHECK THROTTLE CONTROL MOTOR

Refer to EC-519, "Component Inspection".

OK or NG

OK >> GO TO 12.
NG >> GO TO 13.

12. CHECK INTERMITTENT INCIDENT

Refer to EC-130.

OK or NG

OK >> GO TO 13.
NG >> Repair or replace harness or connectors.

13. REPLACE ELECTRIC THROTTLE CONTROL ACTUATOR

1. Replace the electric throttle control actuator.
2. Perform EC-73, "Throttle Valve Closed Position Learning".
3. Perform EC-73, "Idle Air Volume Learning".

>> **INSPECTION END**

Component Inspection

INFOID:0000000001717653

THROTTLE CONTROL MOTOR

1. Disconnect electric throttle control actuator harness connector.

2. Check resistance between terminals 3 and 6.

Resistance: Approximately 1 - 15 Ω [at 25 °C (77°F)]

3. If NG, replace electric throttle control actuator and go to next step.
4. Perform EC-73, "Throttle Valve Closed Position Learning".
5. Perform EC-73, "Idle Air Volume Learning".

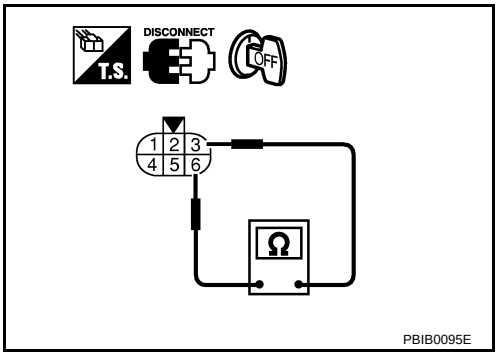

Removal and Installation

INFOID:0000000001717654

ELECTRIC THROTTLE CONTROL ACTUATOR
Refer to EM-23.

DTC P2118 THROTTLE CONTROL MOTOR

Component Description

INFOID:0000000001717655

The throttle control motor is operated by the ECM and it opens and closes the throttle valve.
The current opening angle of the throttle valve is detected by the throttle position sensor and it provides feedback to the ECM to control the throttle control motor to make the throttle valve opening angle properly in response to driving condition.

On Board Diagnosis Logic

INFOID:0000000001717656

This self-diagnosis has the one trip detection logic.

DTC No.	Trouble diagnosis name	DTC detecting condition	Possible cause
P2118 2118	Throttle control motor circuit short	ECM detects short in both circuits between ECM and throttle control motor.	• Harness or connectors (Throttle control motor circuit is shorted.) • Electric throttle control actuator (Throttle control motor)

FAIL-SAFE MODE

When the malfunction is detected, the ECM enters fail-safe mode and the MIL lights up.

Engine operating condition in fail-safe mode
ECM stops the electric throttle control actuator control, throttle valve is maintained at a fixed opening (approx. 5 degrees) by the return spring.

DTC Confirmation Procedure

INFOID:0000000001717657

1. If DTC Confirmation Procedure has been previously conducted, always perform the following before conducting the next step.
a. Turn ignition switch OFF and wait at least 10 seconds.
b. Turn ignition switch ON.
c. Turn ignition switch OFF and wait at least 10 seconds.
2. Start engine and let it idle for 5 seconds.
3. Check DTC.
4. If DTC is detected, go to EC-523, "Diagnosis Procedure".

Wiring Diagram

INFOID:0000000001717658

EC-ETC3-01

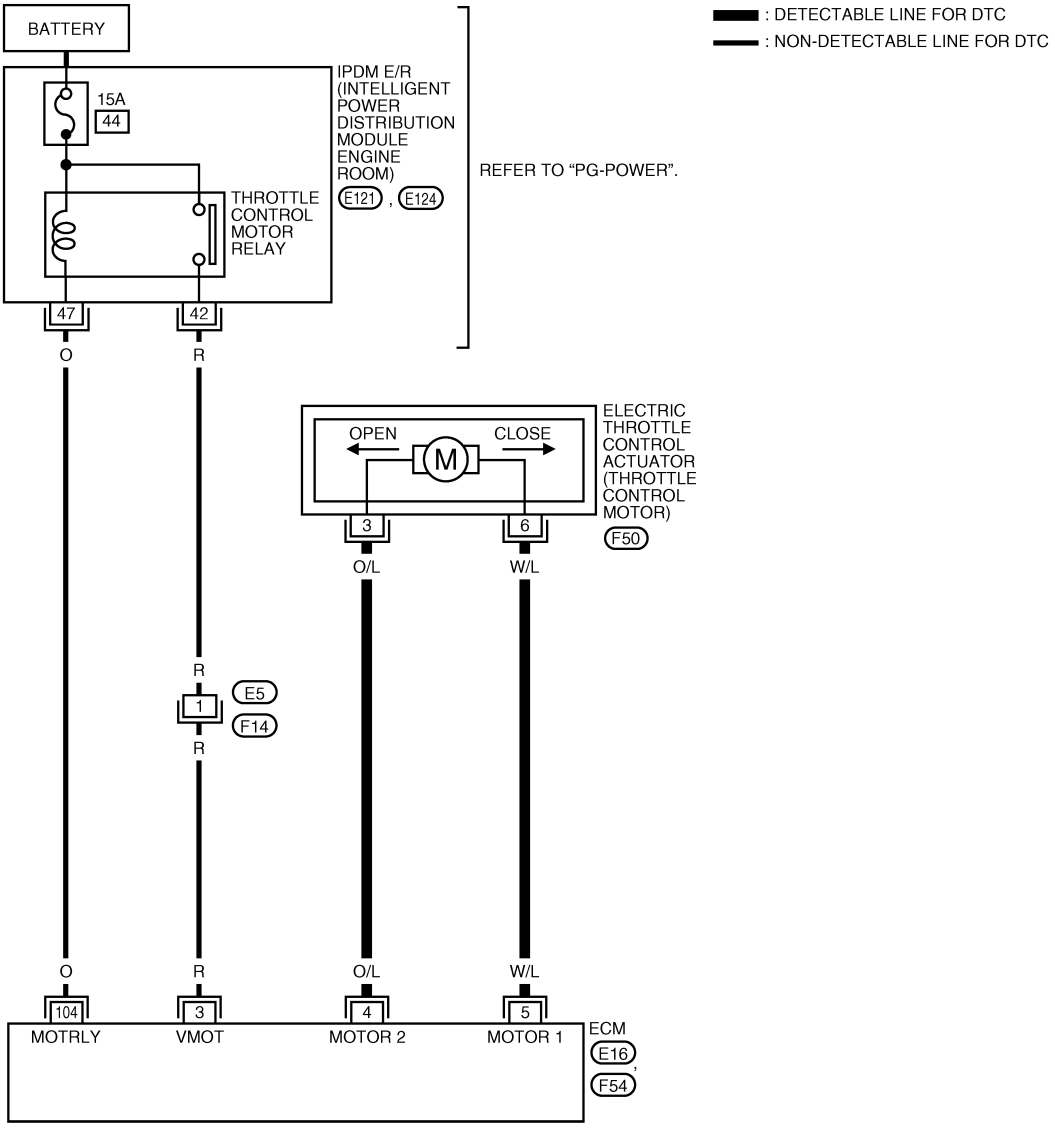

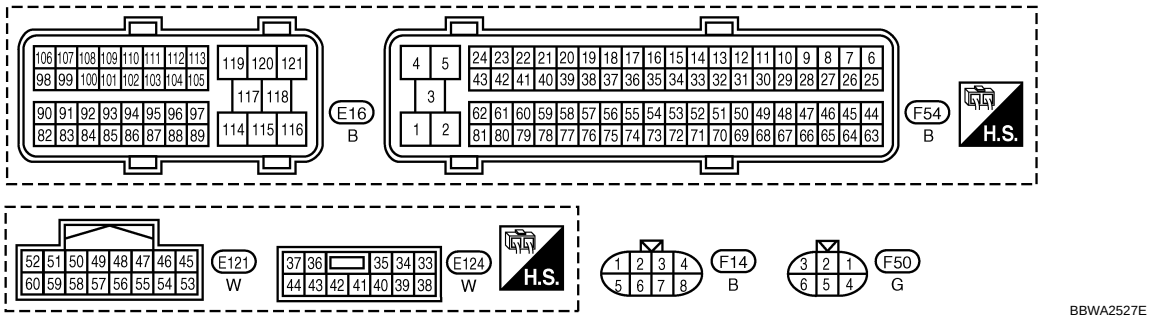

Specification data are reference values and are measured between each terminal and ground.
Pulse signal is measured by CONSULT-III.

CAUTION:

Do not use ECM ground terminals when measuring input/output voltage. Doing so may result in damage to the ECM's transistor. Use a ground other than ECM terminals, such as the ground.

TERMINAL NO.	WIRE COLOR	ITEM	CONDITION	DATA (DC Voltage)
3	R	Throttle control motor relay power supply	**[Ignition switch: ON]**	BATTERY VOLTAGE (11 - 14V)
4	O/L	Throttle control motor (Close)	**[Ignition switch: ON]** • Engine stopped • Shift lever: D • Accelerator pedal: Fully released	0 - 14V★ 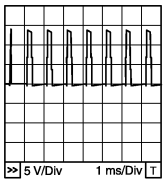 PBIB1104E
5	W/L	Throttle control motor (Open)	**[Ignition switch: ON]** • Engine stopped • Shift lever: D • Accelerator pedal: Fully depressed	0 - 14V★ 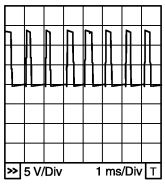 PBIB1105E
104	O	Throttle control motor relay	**[Ignition switch: OFF]**	BATTERY VOLTAGE (11 - 14V)
			[Ignition switch: ON]	0 - 1.0V

★: Average voltage for pulse signal (Actual pulse signal can be confirmed by oscilloscope.)

Diagnosis Procedure

INFOID:0000000001717659

1. CHECK GROUND CONNECTIONS

1. Turn ignition switch OFF.
2. Loosen and retighten three ground screws on the body. Refer to EC-138, "Ground Inspection".

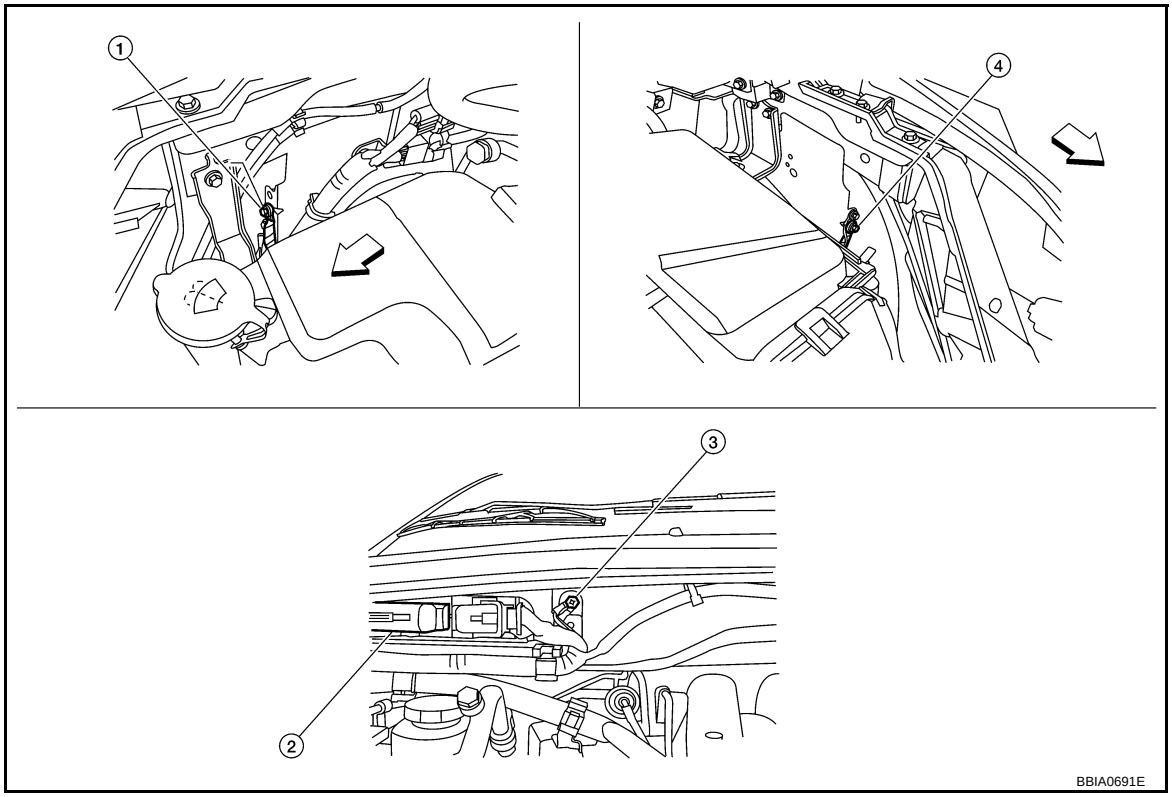

⇦: Vehicle front

1. Body ground E24
2. ECM
3. Body ground E9
4. Body ground E15

OK or NG

OK >> GO TO 2.
NG >> Repair or replace ground connections.

2. CHECK THROTTLE CONTROL MOTOR OUTPUT SIGNAL CIRCUIT FOR OPEN OR SHORT

1. Disconnect electric throttle control actuator harness connector.
2. Disconnect ECM harness connector.
3. Check harness continuity between the following terminals. Refer to Wiring Diagram.

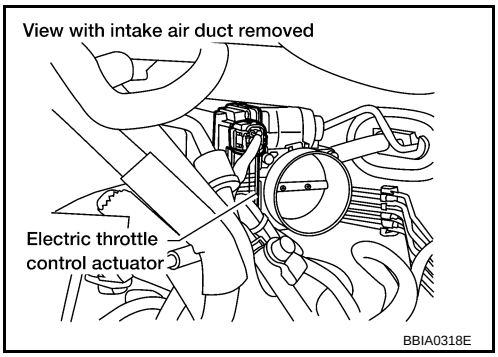

Electric throttle control actuator terminal	ECM terminal	Continuity
3	5	Should not exist
	4	Should exist
6	5	Should exist
	4	Should not exist

4. Also check harness for short to ground and short to power.

OK or NG

OK >> GO TO 3.
NG >> Repair or replace.

3. CHECK THROTTLE CONTROL MOTOR

Refer to EC-525, "Component Inspection".

OK or NG

OK >> GO TO 4.
NG >> GO TO 5.

4. CHECK INTERMITTENT INCIDENT

Refer to EC-130.

OK or NG

OK >> GO TO 5.
NG >> Repair or replace harness or connectors.

5. REPLACE ELECTRIC THROTTLE CONTROL ACTUATOR

1. Replace the electric throttle control actuator.
2. Perform EC-73, "Throttle Valve Closed Position Learning".
3. Perform EC-73, "Idle Air Volume Learning".

>> **INSPECTION END**

Component Inspection

INFOID:0000000001717660

THROTTLE CONTROL MOTOR

1. Disconnect electric throttle control actuator harness connector.
2. Check resistance between terminals 3 and 6.

Resistance: Approximately 1 - 15 Ω [at 25 °C (77°F)]

3. If NG, replace electric throttle control actuator and go to next step.
4. Perform EC-73, "Throttle Valve Closed Position Learning".
5. Perform EC-73, "Idle Air Volume Learning".

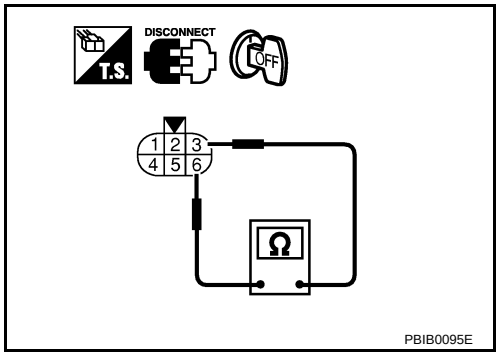

Removal and Installation

INFOID:0000000001717661

ELECTRIC THROTTLE CONTROL ACTUATOR

Refer to EM-17.

DTC P2119 ELECTRIC THROTTLE CONTROL ACTUATOR

Component Description

INFOID:0000000001717662

Electric throttle control actuator consists of throttle control motor, throttle position sensor, etc.
The throttle control motor is operated by the ECM and it opens and closes the throttle valve.
The throttle position sensor detects the throttle valve position, and the opening and closing speed of the throttle valve and feeds the voltage signals to the ECM. The ECM judges the current opening angle of the throttle valve from these signals and the ECM controls the throttle control motor to make the throttle valve opening angle properly in response to driving condition.

On Board Diagnosis Logic

INFOID:0000000001717663

This self-diagnosis has the one trip detection logic.

DTC No.	Trouble diagnosis name	DTC detecting condition		Possible cause
P2119 2119	Electric throttle control actuator	A)	Electric throttle control actuator does not function properly due to the return spring malfunction.	• Electric throttle control actuator
		B)	Throttle valve opening angle in fail-safe mode is not in specified range.	
		C)	ECM detect the throttle valve is stuck open.	

FAIL-SAFE MODE

When the malfunction is detected, the ECM enters fail-safe mode and the MIL lights up.

Detected items	Engine operating condition in fail-safe mode
Malfunction A	The ECM controls the electric throttle actuator by regulating the throttle opening around the idle position. The engine speed will not rise more than 2,000 rpm.
Malfunction B	ECM controls the electric throttle control actuator by regulating the throttle opening to 20 degrees or less.
Malfunction C	While the vehicle is driving, it slows down gradually by fuel cut. After the vehicle stops, the engine stalls. The engine can restart in N or P position, and engine speed will not exceed 1,000 rpm or more.

DTC Confirmation Procedure

INFOID:0000000001717664

NOTE:
- **Perform PROCEDURE FOR MALFUNCTION A AND B first. If the 1st trip DTC cannot be confirmed, perform PROCEDURE FOR MALFUNCTION C.**
- If DTC Confirmation Procedure has been previously conducted, always perform the following before conducting the next step.

1. Turn ignition switch OFF and wait at least 10 seconds.
2. Turn ignition switch ON.
3. Turn ignition switch OFF and wait at least 10 seconds.

PROCEDURE FOR MALFUNCTION A AND B

1. Turn ignition witch ON and wait at least 1 second.
2. Set shift lever to D position and wait at least 3 seconds.
3. Set shift lever to N or P position.
4. Turn ignition witch OFF and wait at least 10 second.
5. Turn ignition witch ON and wait at least 1 second.
6. Set shift lever to D position and wait at least 3 seconds.
7. Set shift lever to N or P position.
8. Turn ignition switch OFF, wait at least 10 seconds, and then turn ON.
9. Check DTC.
10. If DTC is detected, go to EC-527, "Diagnosis Procedure".

PROCEDURE FOR MALFUNCTION C

1. Turn ignition switch ON and wait at least 1 second.
2. Set shift lever to D position and wait at least 3 seconds.
3. Set shift lever to P or N position.
4. Start engine and let it idle for 3 seconds.
5. Check DTC.
6. If DTC is detected, go to EC-527, "Diagnosis Procedure".

Diagnosis Procedure

INFOID:0000000001717665

1. CHECK ELECTRIC THROTTLE CONTROL ACTUATOR VISUALLY

1. Remove the intake air duct.
2. Check if a foreign matter is caught between the throttle valve and the housing.

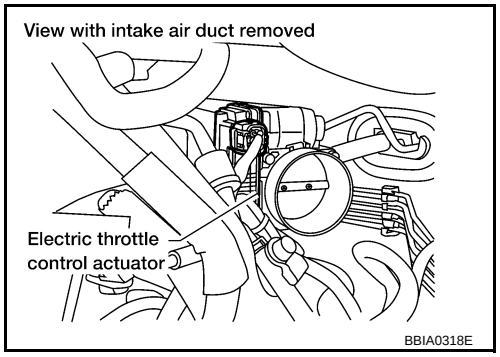

OK or NG

OK >> GO TO 2.
NG >> Remove the foreign matter and clean the electric throttle control actuator inside.

2. REPLACE ELECTRIC THROTTLE CONTROL ACTUATOR

1. Replace the electric throttle control actuator.
2. Perform EC-73, "Throttle Valve Closed Position Learning".
3. Perform EC-73, "Idle Air Volume Learning".

>> **INSPECTION END**

DTC P2122, P2123 APP SENSOR

Component Description

INFOID:0000000001717666

The accelerator pedal position sensor is installed on the upper end of the accelerator pedal assembly. The sensor detects the accelerator position and sends a signal to the ECM.
Accelerator pedal position sensor has two sensors. These sensors are a kind of potentiometers which transform the accelerator pedal position into output voltage, and emit the voltage signal to the ECM. In addition, these sensors detect the opening and closing speed of the accelerator pedal and feed the voltage signals to the ECM. The ECM judges the current opening angle of the accelerator pedal from these signals and controls the throttle control motor based on these signals.

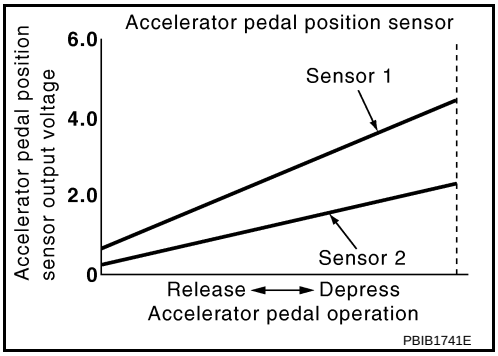

Idle position of the accelerator pedal is determined by the ECM receiving the signal from the accelerator pedal position sensor. The ECM uses this signal for the engine operation such as fuel cut.

CONSULT-III Reference Value in Data Monitor Mode

INFOID:0000000001717667

Specification data are reference values.

MONITOR ITEM	CONDITION		SPECIFICATION
ACCEL SEN 1 ACCEL SEN 2*	• Ignition switch: ON (Engine stopped)	Accelerator pedal: Fully released	0.5 - 1.0V
		Accelerator pedal: Fully depressed	4.2 - 4.8V
CLSD THL POS	• Ignition switch: ON (Engine stopped)	Accelerator pedal: Fully released	ON
		Accelerator pedal: Slightly depressed	OFF

*: Accelerator pedal position sensor 2 signal is converted by ECM internally. Thus, it differ from ECM terminal voltage.

On Board Diagnosis Logic

INFOID:0000000001717668

These self-diagnoses have the one trip detection logic.
NOTE:
If DTC P2122 or P2123 is displayed with DTC P0643, first perform the trouble diagnosis for DTC P0643. Refer to EC-449.

DTC No.	Trouble diagnosis name	DTC detecting condition	Possible cause
P2122 2122	Accelerator pedal position sensor 1 circuit low input	An excessively low voltage from the APP sensor 1 is sent to ECM.	• Harness or connectors (The APP sensor 1 circuit is open or shorted.) • Accelerator pedal position sensor (APP sensor 1)
P2123 2123	Accelerator pedal position sensor 1 circuit high input	An excessively high voltage from the APP sensor 1 is sent to ECM.	

FAIL-SAFE MODE

When the malfunction is detected, ECM enters fail-safe mode and the MIL lights up.

Engine operating condition in fail-safe mode
The ECM controls the electric throttle control actuator in regulating the throttle opening in order for the idle position to be within +10 degrees. The ECM regulates the opening speed of the throttle valve to be slower than the normal condition. So, the acceleration will be poor.

DTC Confirmation Procedure

INFOID:0000000001717669

NOTE:
If DTC Confirmation Procedure has been previously conducted, always perform the following before conducting the next step.
1. Turn ignition switch OFF and wait at least 10 seconds.

2. Turn ignition switch ON.
3. Turn ignition switch OFF and wait at least 10 seconds.

TESTING CONDITION:

Before performing the following procedure, confirm that battery voltage is more than 10V at idle.

1. Start engine and let it idle for 1 second.
2. Check DTC.
3. If DTC is detected, go to EC-530, "Diagnosis Procedure".

Wiring Diagram

INFOID:0000000001717670

EC-APPS1-01

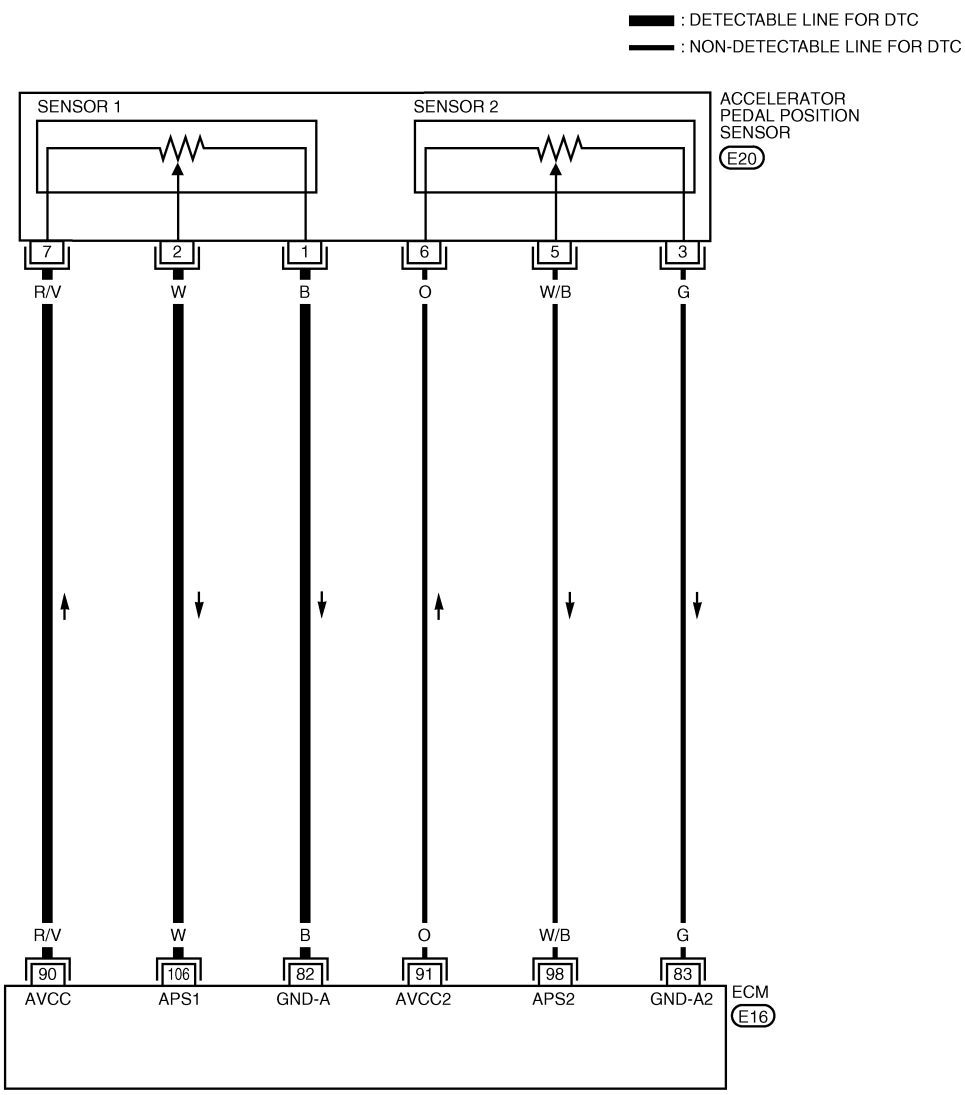

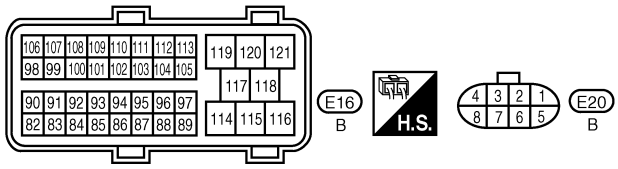

BBWA2026E

Specification data are reference values and are measured between each terminal and ground.

CAUTION:

Do not use ECM ground terminals when measuring input/output voltage. Doing so may result in damage to the ECM's transistor. Use a ground other than ECM terminals, such as the ground.

TERMINAL NO.	WIRE COLOR	ITEM	CONDITION	DATA (DC Voltage)
82	B	APP sensor 1 ground	**[Engine is running]** • **Warm-up condition** • Idle speed	Approximately 0V
83	G	APP sensor 2 ground	**[Engine is running]** • **Warm-up condition** • Idle speed	Approximately 0V
90	R/V	APP sensor 1 power supply	**[Ignition switch: ON]**	Approximately 5V
91	O	APP sensor 2 power supply	**[Ignition switch: ON]**	Approximately 5V
98	W/B	Accelerator pedal position sensor 2	**[Ignition switch: ON]** • Engine stopped • Accelerator pedal: Fully released	0.25 - 0.5V
			[Ignition switch: ON] • Engine stopped • Accelerator pedal: Fully depressed	2.0 - 2.5V
106	W	Accelerator pedal position sensor 1	**[Ignition switch: ON]** • Engine stopped • Accelerator pedal: Fully released	0.5 - 1.0V
			[Ignition switch: ON] • Engine stopped • Accelerator pedal: Fully depressed	4.2 - 4.8V

Diagnosis Procedure

INFOID:0000000001717671

1. CHECK GROUND CONNECTIONS

1. Turn ignition switch OFF.
2. Loosen and retighten three ground screws on the body. Refer to EC-138, "Ground Inspection".

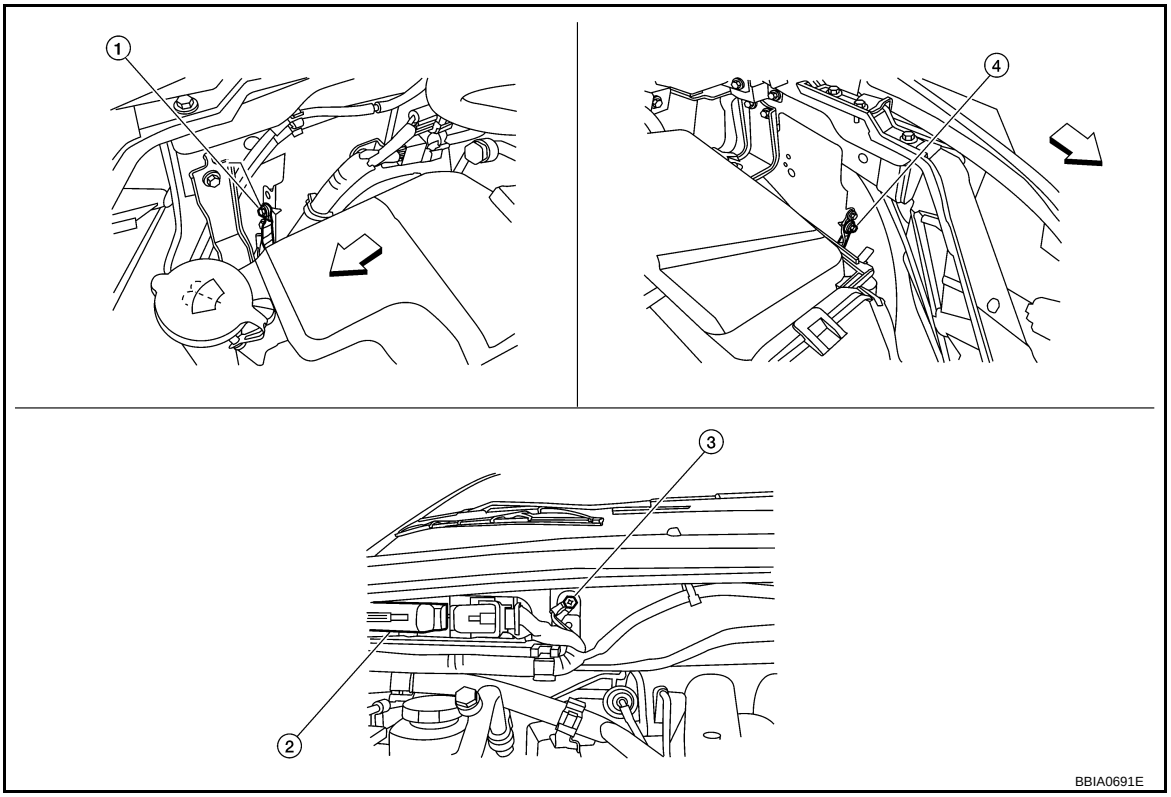

⇦ Vehicle front

1. Body ground E24
2. ECM
3. Body ground E9
4. Body ground E15

OK or NG

OK >> GO TO 2.
NG >> Repair or replace ground connections.

2. CHECK APP SENSOR 1 POWER SUPPLY CIRCUIT

1. Disconnect accelerator pedal position (APP) sensor harness connector.
2. Turn ignition switch ON.

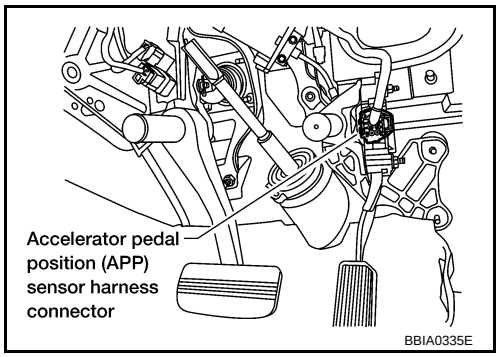

3. Check voltage between APP sensor terminal 7 and ground with CONSULT-III or tester.

Voltage: Approximately 5V

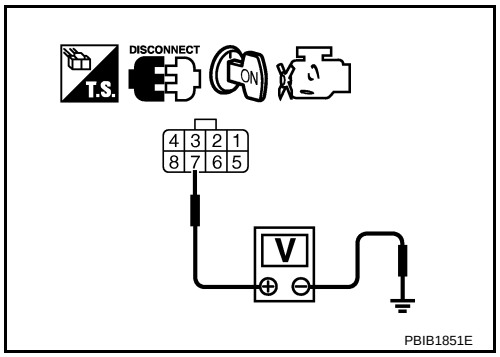

OK or NG

OK >> GO TO 3.
NG >> Repair open circuit or short to ground or short to power in harness or connectors.

3. CHECK APP SENSOR 1 GROUND CIRCUIT FOR OPEN AND SHORT

1. Turn ignition switch OFF.
2. Disconnect ECM harness connector.
3. Check harness continuity between ECM terminal 82 and APP sensor terminal 1.
   Refer to Wiring Diagram.

   Continuity should exist.

4. Also check harness for short to ground and short to power.

OK or NG

OK >> GO TO 4.
NG >> Repair open circuit or short to ground or short to power in harness or connectors.

4. CHECK APP SENSOR INPUT SIGNAL CIRCUIT FOR OPEN AND SHORT

1. Check harness continuity between ECM terminal 106 and APP sensor terminal 2.
   Refer to Wiring Diagram.

   Continuity should exist.

2. Also check harness for short to ground and short to power.

OK or NG

OK >> GO TO 5.
NG >> Repair open circuit or short to ground or short to power in harness or connectors.

5. CHECK APP SENSOR

Refer to EC-532, "Component Inspection".

OK or NG

OK >> GO TO 7.
NG >> GO TO 6.

6. REPLACE ACCELERATOR PEDAL ASSEMBLY

1. Replace accelerator pedal assembly.
2. Perform EC-73, "Accelerator Pedal Released Position Learning".
3. Perform EC-73, "Throttle Valve Closed Position Learning".
4. Perform EC-73, "Idle Air Volume Learning".

>> **INSPECTION END**

7. CHECK INTERMITTENT INCIDENT

Refer to EC-130.

>> **INSPECTION END**

Component Inspection

INFOID:0000000001717672

ACCELERATOR PEDAL POSITION SENSOR

1. Reconnect all harness connectors disconnected.
2. Turn ignition switch ON.

3. Check voltage between ECM terminals 106 (APP sensor 1 signal), 98 (APP sensor 2 signal) and ground under the following conditions.

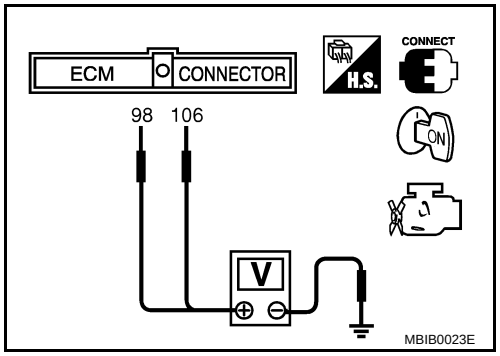

Terminal	Accelerator pedal	Voltage
106 (Accelerator pedal position sensor 1)	Fully released	0.5 - 1.0V
	Fully depressed	4.2 - 4.8V
98 (Accelerator pedal position sensor 2)	Fully released	0.25 - 0.5V
	Fully depressed	0.2 - 2.5V

4. If NG, replace accelerator pedal assembly and go to next step.
5. Perform EC-73, "Accelerator Pedal Released Position Learning".
6. Perform EC-73, "Throttle Valve Closed Position Learning".
7. Perform EC-73, "Idle Air Volume Learning".

Removal and Installation

INFOID:0000000001717673

ACCELERATOR PEDAL

Refer to ACC-3.

DTC P2127, P2128 APP SENSOR

Component Description

INFOID:0000000001717674

The accelerator pedal position sensor is installed on the upper end of the accelerator pedal assembly. The sensor detects the accelerator position and sends a signal to the ECM.
Accelerator pedal position sensor has two sensors. These sensors are a kind of potentiometers which transform the accelerator pedal position into output voltage, and emit the voltage signal to the ECM. In addition, these sensors detect the opening and closing speed of the accelerator pedal and feed the voltage signals to the ECM. The ECM judges the current opening angle of the accelerator pedal from these signals and controls the throttle control motor based on these signals.

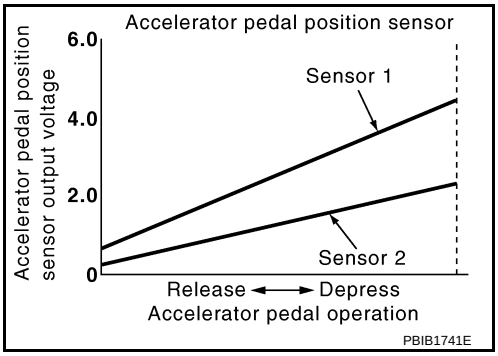

Idle position of the accelerator pedal is determined by the ECM receiving the signal from the accelerator pedal position sensor. The ECM uses this signal for the engine operation such as fuel cut.

CONSULT-III Reference Value in Data Monitor Mode

INFOID:0000000001717675

Specification data are reference values.

MONITOR ITEM	CONDITION		SPECIFICATION
ACCEL SEN 1 ACCEL SEN 2*	• Ignition switch: ON (Engine stopped)	Accelerator pedal: Fully released	0.5 - 1.0V
		Accelerator pedal: Fully depressed	4.2 - 4.8V
CLSD THL POS	• Ignition switch: ON (Engine stopped)	Accelerator pedal: Fully released	ON
		Accelerator pedal: Slightly depressed	OFF

*: Accelerator pedal position sensor 2 signal is converted by ECM internally. Thus, it differ from ECM terminal voltage.

On Board Diagnosis Logic

INFOID:0000000001717676

These self-diagnoses have the one trip detection logic.

DTC No.	Trouble diagnosis name	DTC detecting condition	Possible cause
P2127 2127	Accelerator pedal position sensor 2 circuit low input	An excessively low voltage from the APP sensor 2 is sent to ECM.	• Harness or connectors (APP sensor 2 circuit is open or shorted.) (TP sensor circuit is shorted.) • Accelerator pedal position sensor (APP sensor 2) • Electric throttle control actuator (TP sensor 1 and 2)
P2128 2128	Accelerator pedal position sensor 2 circuit high input	An excessively high voltage from the APP sensor 2 is sent to ECM.	

FAIL-SAFE MODE

When the malfunction is detected, ECM enters fail-safe mode and the MIL lights up.

Engine operating condition in fail-safe mode
The ECM controls the electric throttle control actuator in regulating the throttle opening in order for the idle position to be within +10 degrees. The ECM regulates the opening speed of the throttle valve to be slower than the normal condition. So, the acceleration will be poor.

DTC Confirmation Procedure

INFOID:0000000001717677

NOTE:
If DTC Confirmation Procedure has been previously conducted, always perform the following before conducting the next step.
1. Turn ignition switch OFF and wait at least 10 seconds.
2. Turn ignition switch ON.

3. Turn ignition switch OFF and wait at least 10 seconds.

TESTING CONDITION:

Before performing the following procedure, confirm that battery voltage is more than 10V at idle.

1. Start engine and let it idle for 1 second.
2. Check DTC.
3. If DTC is detected, go to EC-536, "Diagnosis Procedure".

Wiring Diagram

INFOID:0000000001717678

EC-APPS2-01

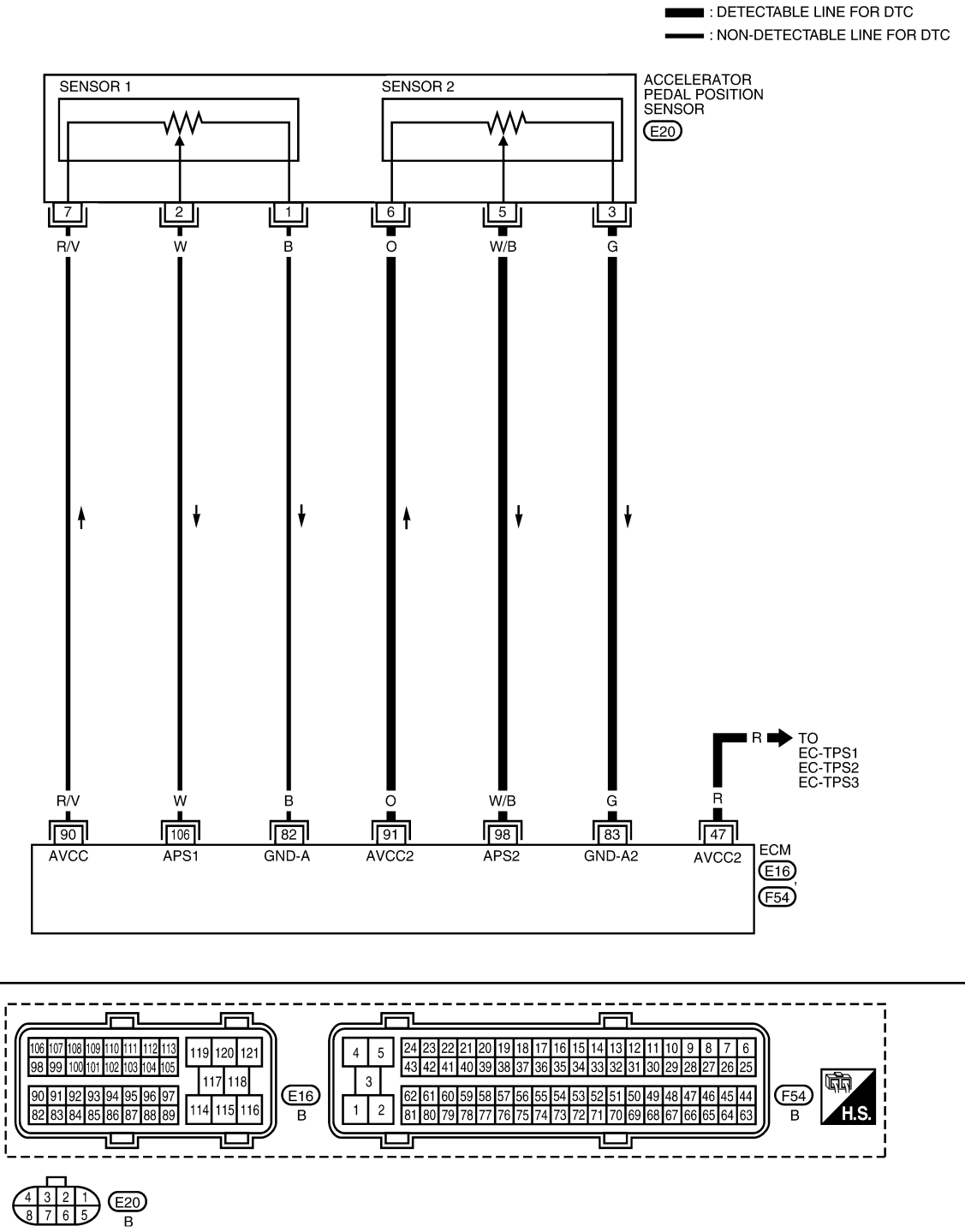

Specification data are reference values and are measured between each terminal and ground.

CAUTION:

Do not use ECM ground terminals when measuring input/output voltage. Doing so may result in damage to the ECM's transistor. Use a ground other than ECM terminals, such as the ground.

TERMINAL NO.	WIRE COLOR	ITEM	CONDITION	DATA (DC Voltage)
47	R	Throttle position sensor power supply	**[Ignition switch: ON]**	Approximately 5V
82	B	APP sensor 1 ground	**[Engine is running]** • **Warm-up condition** • Idle speed	Approximately 0V
83	G	APP sensor 2 ground	**[Engine is running]** • **Warm-up condition** • Idle speed	Approximately 0V
90	R/V	APP sensor 1 power supply	**[Ignition switch: ON]**	Approximately 5V
91	O	APP sensor 2 power supply	**[Ignition switch: ON]**	Approximately 5V
98	W/B	Accelerator pedal position sensor 2	**[Ignition switch: ON]** • Engine stopped • Accelerator pedal: Fully released	0.25 - 0.5V
			[Ignition switch: ON] • Engine stopped • Accelerator pedal: Fully depressed	0.2 - 2.5V
106	W	Accelerator pedal position sensor 1	**[Ignition switch: ON]** • Engine stopped • Accelerator pedal: Fully released	0.5 - 1.0V
			[Ignition switch: ON] • Engine stopped • Accelerator pedal: Fully depressed	4.2 - 4.8V

Diagnosis Procedure

INFOID:0000000001717679

1. CHECK GROUND CONNECTIONS

1. Turn ignition switch OFF.
2. Loosen and retighten three ground screws on the body. Refer to EC-138, "Ground Inspection".

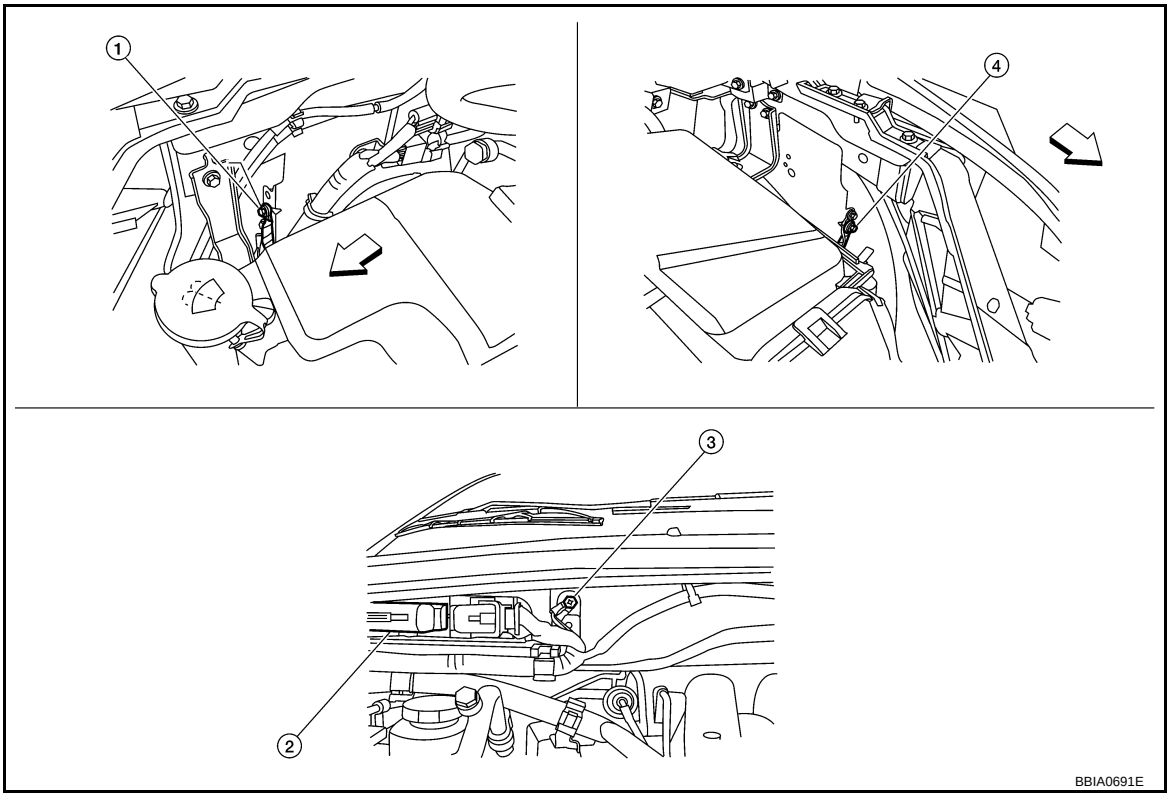

⇦ Vehicle front

1. Body ground E24
2. ECM
3. Body ground E9
4. Body ground E15

OK or NG

OK >> GO TO 2.
NG >> Repair or replace ground connections.

2. CHECK APP SENSOR 2 POWER SUPPLY CIRCUIT-I

1. Disconnect accelerator pedal position (APP) sensor harness connector.
2. Turn ignition switch ON.

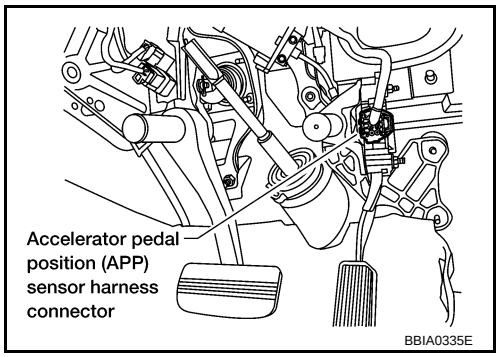

3. Check voltage between APP sensor terminal 6 and ground with CONSULT-III or tester.

Voltage: Approximately 5V

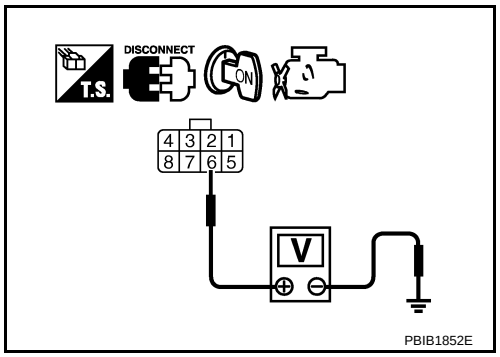

OK or NG

OK >> GO TO 7.
NG >> GO TO 3.

3. CHECK APP SENSOR 2 POWER SUPPLY CIRCUIT-II

1. Turn ignition switch OFF.
2. Disconnect ECM harness connector.
3. Check harness continuity between APP sensor terminal 6 and ECM terminal 91.
   Refer to wiring diagram.

Continuity should exist.

OK or NG

OK >> GO TO 4.
NG >> Repair open circuit.

4. CHECK APP SENSOR 2 POWER SUPPLY CIRCUIT-III

Check harness for short to power and short to ground, between the following terminals.

ECM terminal	Sensor terminal	Reference Wiring Diagram
91	APP sensor terminal 6	EC-535
47	Electric throttle control actuator terminal 1	EC-541

OK or NG

OK >> GO TO 5.
NG >> Repair short to ground or short to power in harness or connectors.

5. CHECK THROTTLE POSITION SENSOR

Refer to EC-545, "Component Inspection".

OK or NG

OK >> GO TO 11.
NG >> GO TO 6.

6. REPLACE ELECTRIC THROTTLE CONTROL ACTUATOR

1. Replace electric throttle control actuator.
2. PerformEC-73, "Throttle Valve Closed Position Learning".
3. Perform EC-73, "Idle Air Volume Learning".

>> **INSPECTION END**

7. CHECK APP SENSOR 2 GROUND CIRCUIT FOR OPEN AND SHORT

1. Turn ignition switch OFF.
2. Disconnect ECM harness connector.
3. Check harness continuity between ECM terminal 83 and APP sensor terminal 3.
   Refer to Wiring Diagram.

Continuity should exist.

4. Also check harness for short to ground and short to power.

OK or NG

OK >> GO TO 8.
NG >> Repair open circuit or short to ground or short to power in harness or connectors.

8. CHECK APP SENSOR 2 INPUT SIGNAL CIRCUIT FOR OPEN AND SHORT

1. Check harness continuity between ECM terminal 98 and APP sensor terminal 5.
   Refer to Wiring Diagram.

Continuity should exist.

2. Also check harness for short to ground and short to power.

OK or NG

OK >> GO TO 9.

NG >> Repair open circuit or short to ground or short to power in harness or connectors.

9. CHECK APP SENSOR

Refer to EC-539, "Component Inspection".

OK or NG

OK >> GO TO 11.
NG >> GO TO 10.

10. REPLACE ACCELERATOR PEDAL ASSEMBLY

1. Replace accelerator pedal assembly.
2. PerformEC-73, "Accelerator Pedal Released Position Learning".
3. Perform EC-73, "Throttle Valve Closed Position Learning".
4. Perform EC-73, "Idle Air Volume Learning".

>> **INSPECTION END**

11. CHECK INTERMITTENT INCIDENT

Refer to EC-130.

>> **INSPECTION END**

Component Inspection

INFOID:0000000001717680

ACCELERATOR PEDAL POSITION SENSOR

1. Reconnect all harness connectors disconnected.
2. Turn ignition switch ON.
3. Check voltage between ECM terminals 106 (APP sensor 1 signal), 98 (APP sensor 2 signal) and ground under the following conditions.

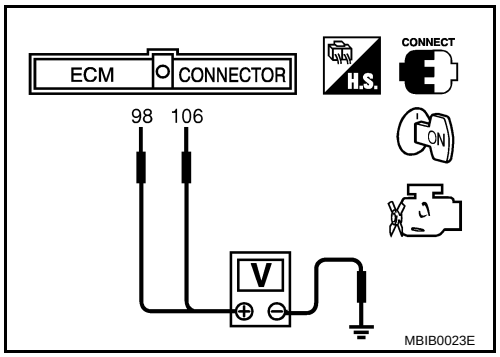

Terminal	Accelerator pedal	Voltage
106 (Accelerator pedal position sensor 1)	Fully released	0.5 - 1.0V
	Fully depressed	4.2 - 4.8V
98 (Accelerator pedal position sensor 2)	Fully released	0.25 - 0.5V
	Fully depressed	0.2 - 2.5V

4. If NG, replace accelerator pedal assembly and go to next step.
5. Perform EC-73, "Accelerator Pedal Released Position Learning".
6. Perform EC-73, "Throttle Valve Closed Position Learning".
7. Perform EC-73, "Idle Air Volume Learning".

Removal and Installation

INFOID:0000000001717681

ACCELERATOR PEDAL

Refer to ACC-3.

DTC P2135 TP SENSOR

Component Description

INFOID:0000000001717682

Electric throttle control actuator consists of throttle control motor, throttle position sensor, etc. The throttle position sensor responds to the throttle valve movement.
The throttle position sensor has the two sensors. These sensors are a kind of potentiometers which transform the throttle valve position into output voltage, and emit the voltage signal to the ECM. In addition, these sensors detect the opening and closing speed of the throttle valve and feed the voltage signals to the ECM. The ECM judges the current opening angle of the throttle valve from these signals and the ECM controls the throttle control motor to make the throttle valve opening angle properly in response to driving condition.

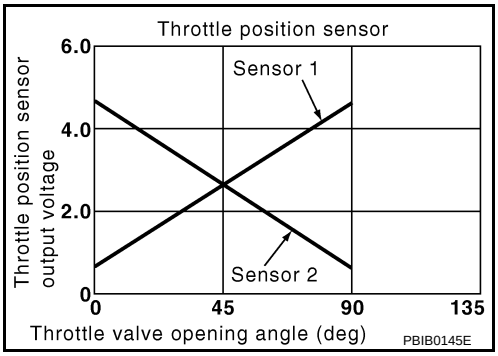

CONSULT-III Reference Value in Data Monitor Mode

INFOID:0000000001717683

Specification data are reference values.

MONITOR ITEM	CONDITION		SPECIFICATION
TP SEN 1-B1 TP SEN 2-B1*	• Ignition switch: ON (Engine stopped) • Shift lever: D	Accelerator pedal: Fully released	More than 0.36V
		Accelerator pedal: Fully depressed	Less than 4.75V

*: Throttle position sensor 2 signal is converted by ECM internally. Thus, it differs from ECM terminal voltage signal.

On Board Diagnosis Logic

INFOID:0000000001717684

This self-diagnosis has the one trip detection logic.

DTC No.	Trouble diagnosis name	DTC detecting condition	Possible cause
P2135 2135	Throttle position sensor circuit range/performance	Rationally incorrect voltage is sent to ECM compared with the signals from TP sensor 1 and TP sensor 2.	• Harness or connector (TP sensor 1 and 2 circuit is open or shorted.) (APP sensor 2 circuit is shorted.) • Electric throttle control actuator (TP sensor 1 and 2) • Accelerator pedal position sensor (APP sensor 2)

FAIL-SAFE MODE

When the malfunction is detected, the ECM enters fail-safe mode and the MIL lights up.

Engine operation condition in fail-safe mode
The ECM controls the electric throttle control actuator in regulating the throttle opening in order for the idle position to be within +10 degrees. The ECM regulates the opening speed of the throttle valve to be slower than the normal condition. So, the acceleration will be poor.

DTC Confirmation Procedure

INFOID:0000000001717685

NOTE:
If DTC Confirmation Procedure has been previously conducted, always perform the following before conducting the next step.
1. Turn ignition switch OFF and wait at least 10 seconds.
2. Turn ignition switch ON.
3. Turn ignition switch OFF and wait at least 10 seconds.

TESTING CONDITION:
Before performing the following procedure, confirm that battery voltage is more than 10V at idle.

1. Start engine and let it idle for 1 second.
2. Check DTC.
3. If DTC is detected, go to EC-542, "Diagnosis Procedure".

Wiring Diagram

INFOID:0000000001717686

EC-TPS3-01

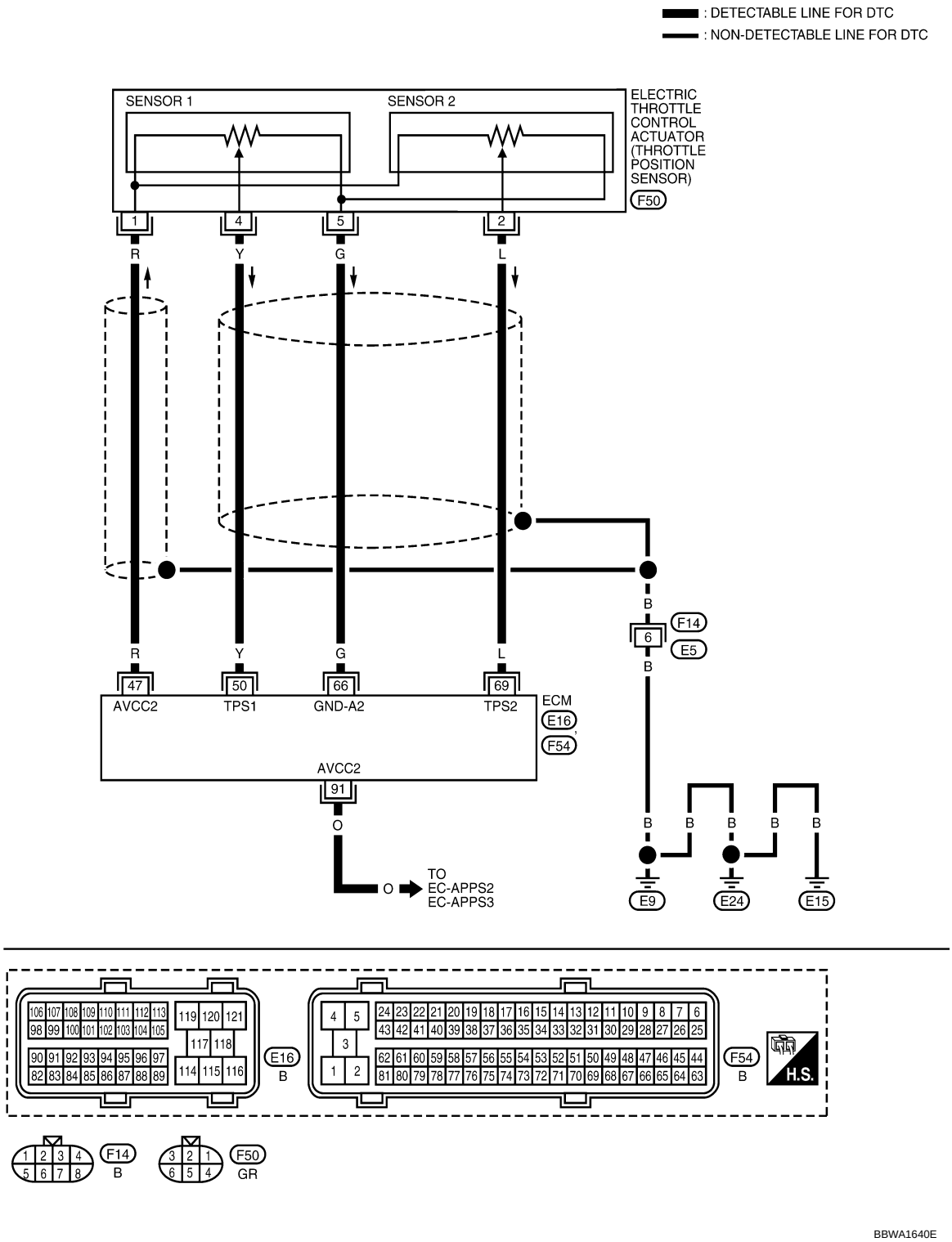

Specification data are reference values and are measured between each terminal and ground.

CAUTION:

Do not use ECM ground terminals when measuring input/output voltage. Doing so may result in damage to the ECM's transistor. Use a ground other than ECM terminals, such as the ground.

TERMINAL NO.	WIRE COLOR	ITEM	CONDITION	DATA (DC Voltage)
47	R	Throttle position sensor power supply	**[Ignition switch: ON]**	Approximately 5V
50	Y	Throttle position sensor 1	**[Ignition switch: ON]** • Engine stopped • Shift lever: D • Accelerator pedal: Fully released	More than 0.36V
			[Ignition switch: ON] • Engine stopped • Shift lever: D • Accelerator pedal: Fully depressed	Less than 4.75V
66	G	Throttle position sensor ground	**[Engine is running]** • **Warm-up condition** • Idle speed	Approximately 0V
69	L	Throttle position sensor 2	**[Ignition switch: ON]** • Engine stopped • Shift lever: D • Accelerator pedal: Fully released	Less than 4.75V
			[Ignition switch: ON] • Engine stopped • Shift lever: D • Accelerator pedal: Fully depressed	More than 0.36V
91	O	APP sensor 2 power supply	**[Ignition switch: ON]**	Approximately 5V

Diagnosis Procedure

INFOID:0000000001717687

1. CHECK GROUND CONNECTIONS

1. Turn ignition switch OFF.
2. Loosen and retighten three ground screws on the body. Refer to EC-138, "Ground Inspection".

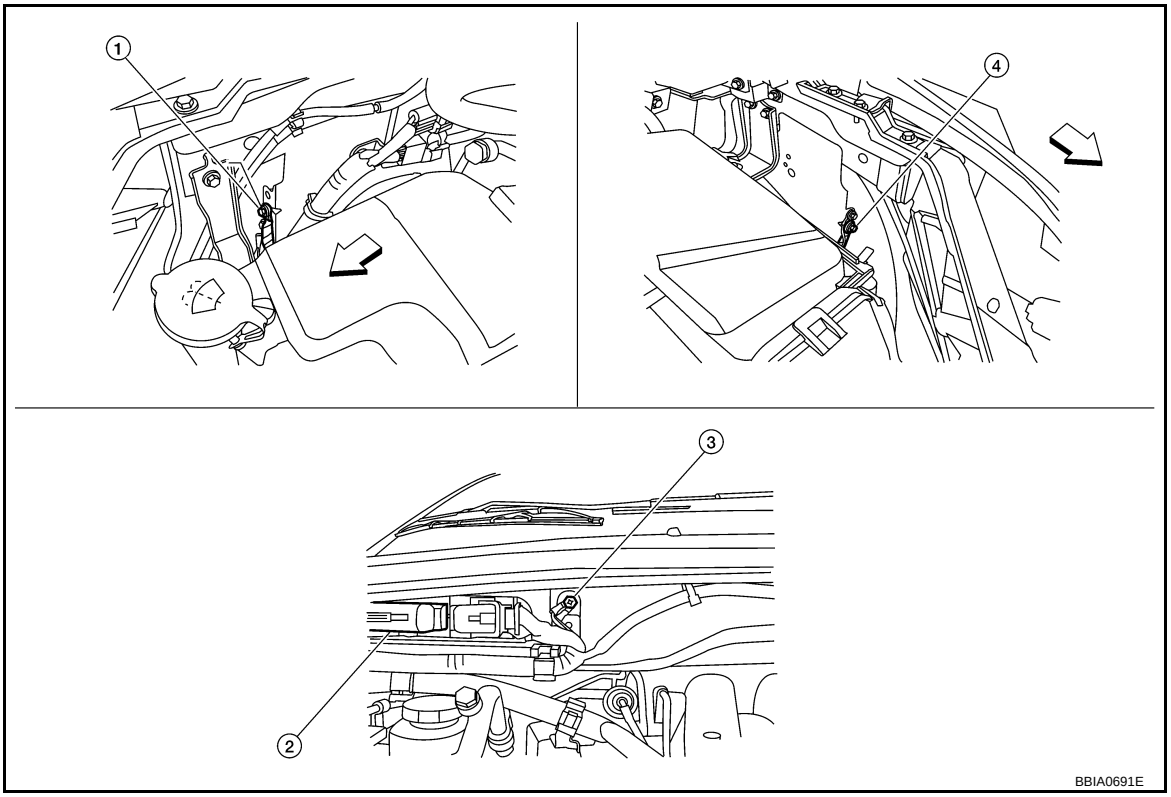

⇦ Vehicle front

1. Body ground E24
2. ECM
3. Body ground E9
4. Body ground E15

OK or NG

OK >> GO TO 2.
NG >> Repair or replace ground connections.

2. CHECK THROTTLE POSITION SENSOR POWER SUPPLY CIRCUIT-I

1. Disconnect electric throttle control actuator harness connector.
2. Turn ignition switch ON.

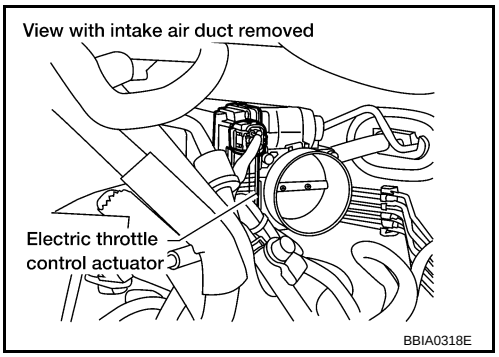

3. Check voltage between electric throttle control actuator terminal 1 and ground with CONSULT-III or tester.

Voltage: Approximately 5V

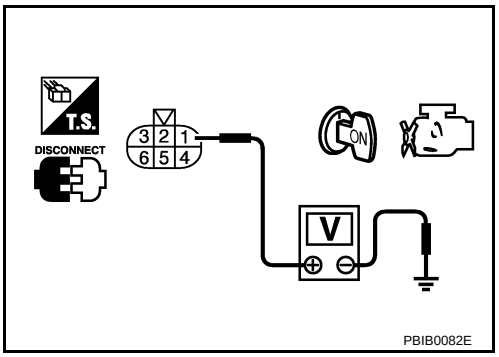

OK or NG

OK >> GO TO 7.
NG >> GO TO 3.

3. CHECK THROTTLE POSITION SENSOR POWER SUPPLY CIRCUIT-II

1. Turn ignition switch OFF.
2. Disconnect ECM harness connector.
3. Check harness continuity between electric throttle control actuator terminal 1 and ECM terminal 47. Refer to Wiring Diagram.

Continuity should exist.

OK or NG

OK >> GO TO 4.
NG >> Repair open circuit.

4. CHECK THROTTLE POSITION SENSOR POWER SUPPLY CIRCUIT-III

Check harness for short to power and short to ground, between the following terminals.

ECM terminal	Sensor terminal	Reference Wiring Diagram
47	Electric throttle control actuator terminal 1	EC-541
91	APP sensor terminal 6	EC-548

OK or NG

OK >> GO TO 5.
NG >> Repair short to ground or short to power in harness or connectors.

5. CHECK APP SENSOR

Refer to EC-552, "Component Inspection".

OK or NG

OK >> GO TO 11.
NG >> GO TO 6.

6. REPLACE ACCELERATOR PEDAL ASSEMBLY

1. Replace accelerator pedal assembly.
2. PerformEC-73, "Accelerator Pedal Released Position Learning".
3. Perform EC-73, "Throttle Valve Closed Position Learning".
4. Perform EC-73, "Idle Air Volume Learning".

>> **INSPECTION END**

7. CHECK THROTTLE POSITION SENSOR GROUND CIRCUIT FOR OPEN AND SHORT

1. Turn ignition switch OFF.
2. Disconnect ECM harness connector.
3. Check harness continuity between ECM terminal 66 and electric throttle control actuator terminal 5. Refer to Wiring Diagram.

Continuity should exist.

4. Also check harness for short to ground and short to power.

OK or NG

OK >> GO TO 8.
NG >> Repair open circuit or short to ground or short to power in harness or connectors.

8. CHECK THROTTLE POSITION SENSOR INPUT SIGNAL CIRCUIT FOR OPEN AND SHORT

1. Check harness continuity between ECM terminal 50 and electric throttle control actuator terminal 4, ECM terminal 69 and electric throttle control actuator terminal 2. Refer to Wiring Diagram.

Continuity should exist.

2. Also check harness for short to ground and short to power.

OK or NG

OK >> GO TO 9.
NG >> Repair open circuit or short to ground or short to power in harness or connectors.

9. CHECK THROTTLE POSITION SENSOR

Refer to EC-545, "Component Inspection".

OK or NG

OK >> GO TO 11.
NG >> GO TO 10.

10. REPLACE ELECTRIC THROTTLE CONTROL ACTUATOR

1. Replace the electric throttle control actuator.
2. Perform EC-73, "Throttle Valve Closed Position Learning".
3. Perform EC-73, "Idle Air Volume Learning".

>> **INSPECTION END**

11. CHECK INTERMITTENT INCIDENT

Refer to EC-130.

>> **INSPECTION END**

Component Inspection

INFOID:0000000001717688

THROTTLE POSITION SENSOR

1. Reconnect all harness connectors disconnected.
2. Perform EC-73, "Throttle Valve Closed Position Learning".
3. Turn ignition switch ON.
4. Set shift lever to D position.
5. Check voltage between ECM terminals 50 (TP sensor 1 signal), 69 (TP sensor 2 signal) and ground under the following conditions.

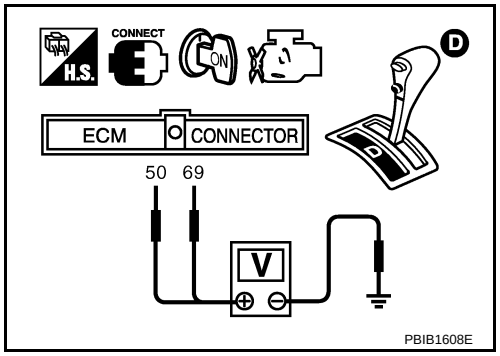

Terminal	Accelerator pedal	Voltage
50 (Throttle position sensor 1)	Fully released	More than 0.36V
	Fully depressed	Less than 4.75V
69 (Throttle position sensor 2)	Fully released	Less than 4.75V
	Fully depressed	More than 0.36V

6. If NG, replace electric throttle control actuator and go to the next step.
7. Perform EC-73, "Throttle Valve Closed Position Learning".
8. Perform EC-73, "Idle Air Volume Learning".

Removal and Installation

INFOID:0000000001717689

ELECTRIC THROTTLE CONTROL ACTUATOR

Refer to EM-17.

DTC P2138 APP SENSOR

Component Description

INFOID:0000000001717690

The accelerator pedal position sensor is installed on the upper end of the accelerator pedal assembly. The sensor detects the accelerator position and sends a signal to the ECM.
Accelerator pedal position sensor has two sensors. These sensors are a kind of potentiometers which transform the accelerator pedal position into output voltage, and emit the voltage signal to the ECM. In addition, these sensors detect the opening and closing speed of the accelerator pedal and feed the voltage signals to the ECM. The ECM judges the current opening angle of the accelerator pedal from these signals and controls the throttle control motor based on these signals.

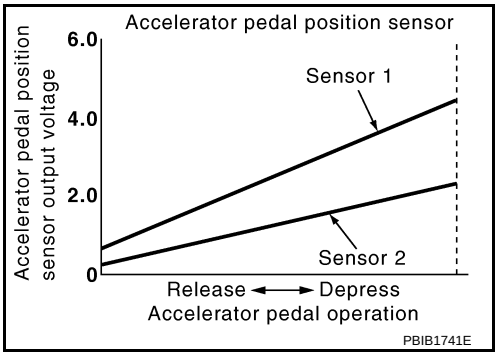

Idle position of the accelerator pedal is determined by the ECM receiving the signal from the accelerator pedal position sensor. The ECM uses this signal for the engine operation such as fuel cut.

CONSULT-III Reference Value in Data Monitor Mode

INFOID:0000000001717691

Specification data are reference values.

MONITOR ITEM	CONDITION		SPECIFICATION
ACCEL SEN 1 ACCEL SEN 2*	• Ignition switch: ON (Engine stopped)	Accelerator pedal: Fully released	0.5 - 1.0V
		Accelerator pedal: Fully depressed	4.2 - 4.8V
CLSD THL POS	• Ignition switch: ON (Engine stopped)	Accelerator pedal: Fully released	ON
		Accelerator pedal: Slightly depressed	OFF

*: Accelerator pedal position sensor 2 signal is converted by ECM internally. Thus, it differ from ECM terminal voltage.

On Board Diagnosis Logic

INFOID:0000000001717692

This self-diagnosis has the one trip detection logic.
NOTE:
If DTC P2138 is displayed with DTC P0643, first perform the trouble diagnosis for DTC P0643. Refer to EC-449.

DTC No.	Trouble diagnosis name	DTC detecting condition	Possible cause
P2138 2138	Accelerator pedal position sensor circuit range/performance	Rationally incorrect voltage is sent to ECM compared with the signals from APP sensor 1 and APP sensor 2.	• Harness or connector (APP sensor 1 and 2 circuit is open or shorted.) (TP sensor circuit is shorted.) • Accelerator pedal position sensor (APP sensor 1 and 2) • Electric throttle control actuator (TP sensor 1 and 2)

FAIL-SAFE MODE

When the malfunction is detected, ECM enters fail-safe mode and the MIL lights up.

Engine operating condition in fail-safe mode
The ECM controls the electric throttle control actuator in regulating the throttle opening in order for the idle position to be within +10 degrees. The ECM regulates the opening speed of the throttle valve to be slower than the normal condition. So, the acceleration will be poor.

DTC Confirmation Procedure

INFOID:0000000001717693

NOTE:

If DTC Confirmation Procedure has been previously conducted, always perform the following before conducting the next step.

1. Turn ignition switch OFF and wait at least 10 seconds.
2. Turn ignition switch ON.
3. Turn ignition switch OFF and wait at least 10 seconds.

TESTING CONDITION:

Before performing the following procedure, confirm that battery voltage is more than 10V at idle.

1. Start engine and let it idle for 1 second.
2. Check DTC.
3. If DTC is detected, go to EC-549, "Diagnosis Procedure".

Wiring Diagram

INFOID:0000000001717694

EC-APPS3-01

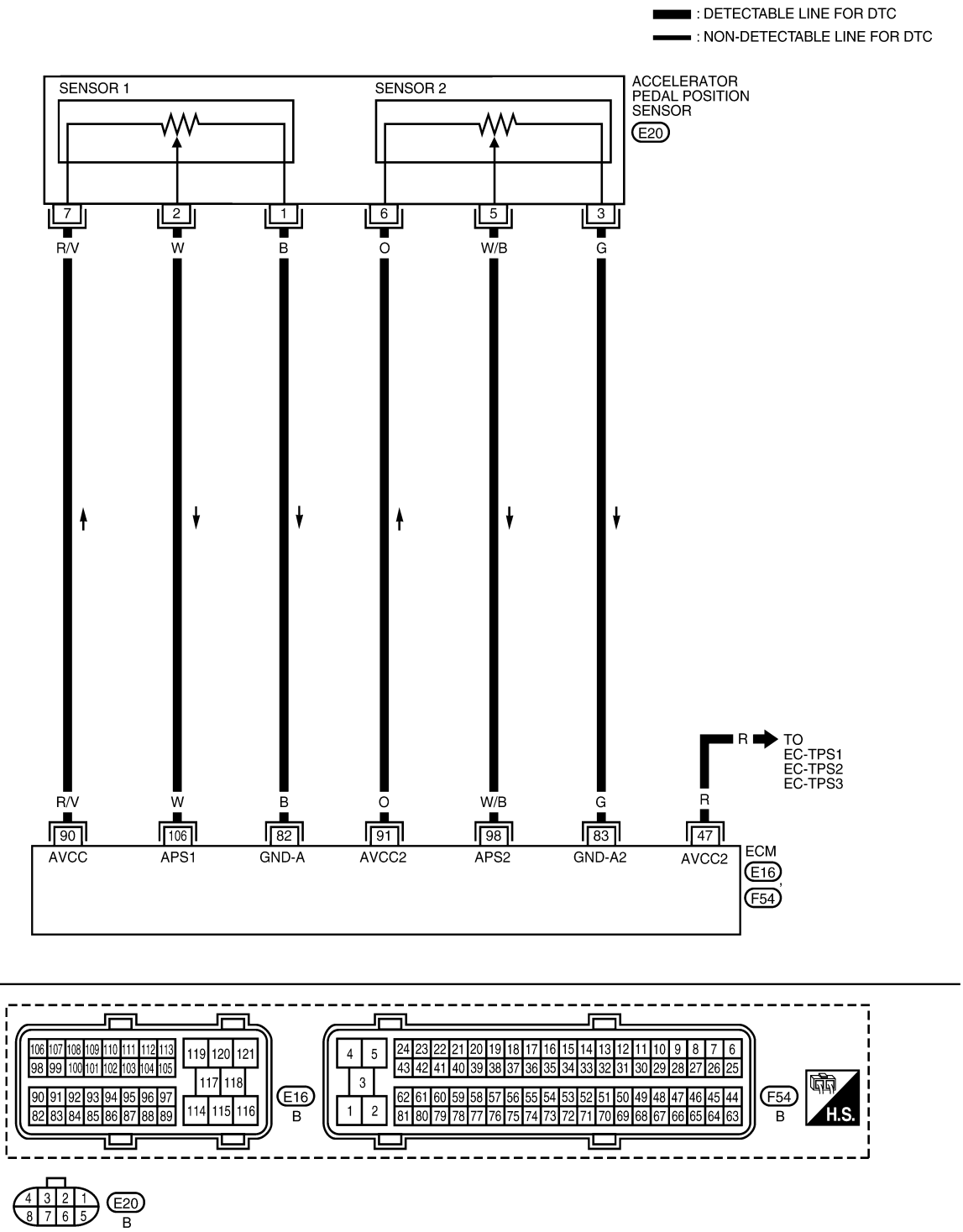

Specification data are reference values and are measured between each terminal and ground.

CAUTION:

Do not use ECM ground terminals when measuring input/output voltage. Doing so may result in damage to the ECM's transistor. Use a ground other than ECM terminals, such as the ground.

TER-MI-NAL NO.	WIRE COLOR	ITEM	CONDITION	DATA (DC Voltage)
47	R	Throttle position sensor power supply	**[Ignition switch: ON]**	Approximately 5V
82	B	APP sensor 1 ground	**[Engine is running]** • **Warm-up condition** • Idle speed	Approximately 0V
83	G	APP sensor 2 ground	**[Engine is running]** • **Warm-up condition** • Idle speed	Approximately 0V
90	R/V	APP sensor 1 power supply	**[Ignition switch: ON]**	Approximately 5V
91	O	APP sensor 2 power supply	**[Ignition switch: ON]**	Approximately 5V
98	W/B	Accelerator pedal position sensor 2	**[Ignition switch: ON]** • Engine stopped • Accelerator pedal: Fully released	0.25 - 0.5V
			[Ignition switch: ON] • Engine stopped • Accelerator pedal: Fully depressed	0.2 - 2.5V
106	W	Accelerator pedal position sensor 1	**[Ignition switch: ON]** • Engine stopped • Accelerator pedal: Fully released	0.5 - 1.0V
			[Ignition switch: ON] • Engine stopped • Accelerator pedal: Fully depressed	4.2 - 4.8V

Diagnosis Procedure

INFOID:0000000001717695

1. CHECK GROUND CONNECTIONS

1. Turn ignition switch OFF.
2. Loosen and retighten three ground screws on the body. Refer to EC-138, "Ground Inspection".

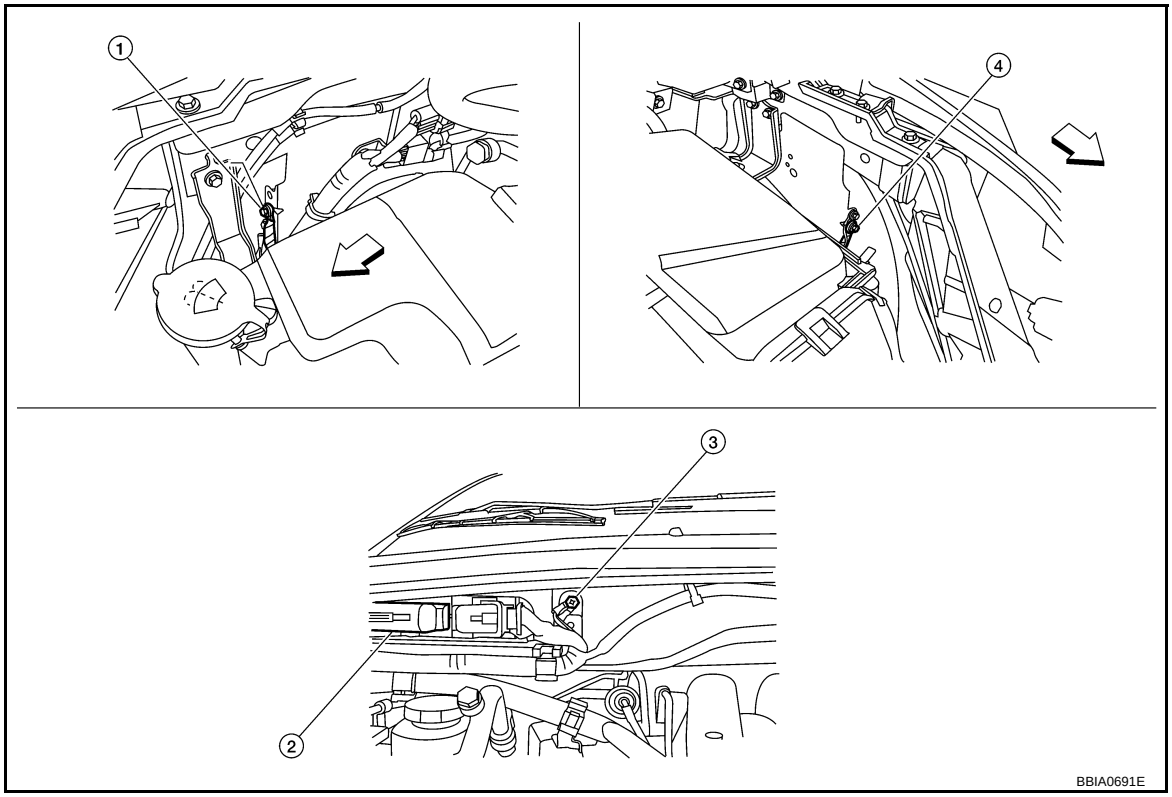

⇦: Vehicle front

1. Body ground E24
2. ECM
3. Body ground E9
4. Body ground E15

OK or NG

OK >> GO TO 2.
NG >> Repair or replace ground connections.

2. CHECK APP SENSOR 1 POWER SUPPLY CIRCUIT

1. Disconnect accelerator pedal position (APP) sensor harness connector.
2. Turn ignition switch ON.

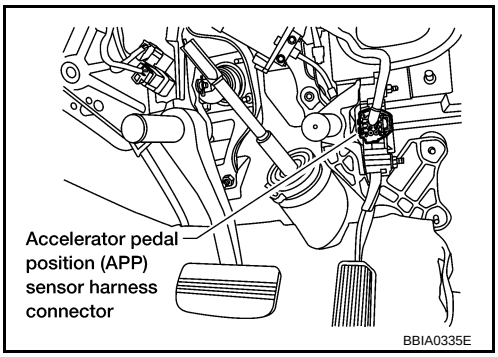

3. Check voltage between APP sensor terminals 7 and ground with CONSULT-III or tester.

Voltage: Approximately 5V

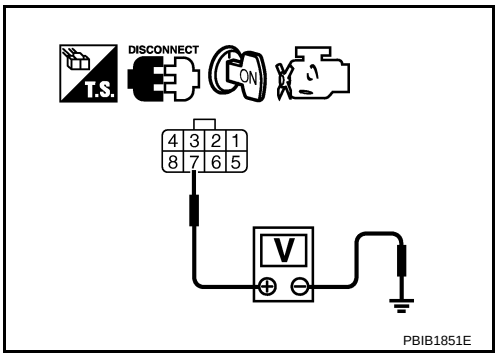

OK or NG

OK >> GO TO 3.
NG >> Repair open circuit or short to ground or short to power in harness or connectors.

3. CHECK APP SENSOR 2 POWER SUPPLY CIRCUIT-I

Check voltage between APP sensor terminal 6 and ground with CONSULT-III or tester.

1.

Voltage: Approximately 5V

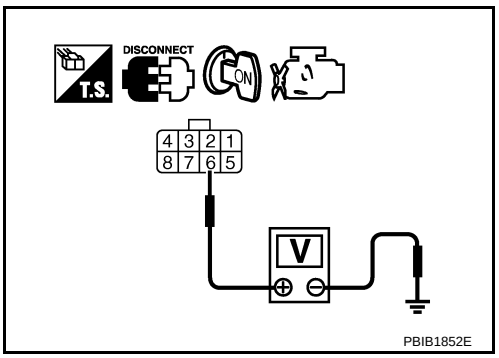

OK or NG

OK >> GO TO 8.
NG >> GO TO 4.

4. CHECK APP SENSOR 2 POWER SUPPLY CIRCUIT-II

1. Turn ignition switch OFF.
2. Disconnect ECM harness connector.
3. Check harness continuity between APP sensor terminal 6 and ECM terminal 91.
   Refer to wiring diagram.

Continuity should exist.

OK or NG

OK >> GO TO 5.
NG >> Repair open circuit.

5. CHECK APP SENSOR 2 POWER SUPPLY CIRCUIT-III

Check harness for short to power and short to ground, between the following terminals.

ECM terminal	Sensor terminal	Reference Wiring Diagram
91	APP sensor terminal 6	EC-548
47	Electric throttle control actuator terminal 1	EC-541

OK or NG

OK >> GO TO 6.
NG >> Repair short to ground or short to power in harness or connectors.

6. CHECK THROTTLE POSITION SENSOR

Refer to EC-545, "Component Inspection".

OK or NG

OK >> GO TO 12.
NG >> GO TO 7.

7. REPLACE ELECTRIC THROTTLE CONTROL ACTUATOR

1. Replace electric throttle control actuator.
2. Perform EC-73, "Throttle Valve Closed Position Learning".
3. Perform EC-73, "Idle Air Volume Learning".

>> **INSPECTION END**

8. CHECK APP SENSOR GROUND CIRCUIT FOR OPEN AND SHORT

1. Turn ignition switch OFF.
2. Disconnect ECM harness connector.
3. Check harness continuity between APP sensor terminals 1 and ECM terminal 82, APP sensor terminal 3 and ECM terminal 83.
   Refer to Wiring Diagram.

Continuity should exist.

4. Also check harness for short to ground and short to power.

OK or NG

OK >> GO TO 9.
NG >> Repair open circuit or short to ground or short to power in harness or connectors.

9. CHECK APP SENSOR INPUT SIGNAL CIRCUIT FOR OPEN AND SHORT

1. Check harness continuity between ECM terminal 106 and APP sensor terminal 2, ECM terminal 98 and APP sensor terminal 5.
   Refer to Wiring Diagram.

   Continuity should exist.

2. Also check harness for short to ground and short to power.

OK or NG

OK >> GO TO 10.
NG >> Repair open circuit or short to ground or short to power in harness or connectors.

10. CHECK APP SENSOR

Refer to EC-552, "Component Inspection".

OK or NG

OK >> GO TO 12.
NG >> GO TO 11.

11. REPLACE ACCELERATOR PEDAL ASSEMBLY

1. Replace accelerator pedal assembly.
2. Perform EC-73, "Accelerator Pedal Released Position Learning".
3. Perform EC-73, "Throttle Valve Closed Position Learning".
4. Perform EC-73, "Idle Air Volume Learning".

>> **INSPECTION END**

12. CHECK INTERMITTENT INCIDENT

Refer to EC-130.

>> **INSPECTION END**

Component Inspection

INFOID:0000000001717696

ACCELERATOR PEDAL POSITION SENSOR

1. Reconnect all harness connectors disconnected.
2. Turn ignition switch ON.
3. Check voltage between ECM terminals 106 (APP sensor 1 signal), 98 (APP sensor 2 signal) and ground under the following conditions.

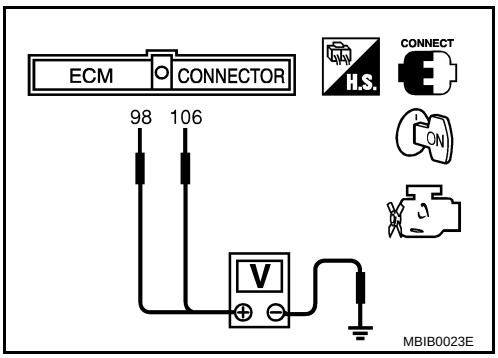

Terminal	Accelerator pedal	Voltage
106 (Accelerator pedal position sensor 1)	Fully released	0.5 - 1.0V
	Fully depressed	4.2 - 4.8V
98 (Accelerator pedal position sensor 2)	Fully released	0.25 - 0.5V
	Fully depressed	0.2 - 2.5V

4. If NG, replace accelerator pedal assembly and go to next step.
5. Perform EC-73, "Accelerator Pedal Released Position Learning".
6. Perform EC-73, "Throttle Valve Closed Position Learning".
7. Perform EC-73, "Idle Air Volume Learning".

Removal and Installation

INFOID:0000000001717697

ACCELERATOR PEDAL

Refer to ACC-3.

DTC P2A00, P2A03 A/F SENSOR 1

Component Description

INFOID:0000000001717698

The A/F sensor is a planar dual-cell limit current sensor. The sensor element of the A/F sensor is the combination of a Nernst concentration cell (sensor cell) with an oxygen-pump cell, which transports ions. It has a heater in the element.

The sensor is capable of precise measurement λ = 1, but also in the lean and rich range. Together with its control electronics, the sensor outputs a clear, continuous signal throughout a wide λ range (0.7 < λ < air).

The exhaust gas components diffuse through the diffusion gap at the electrode of the oxygen pump and Nernst concentration cell, where they are brought to thermodynamic balance.

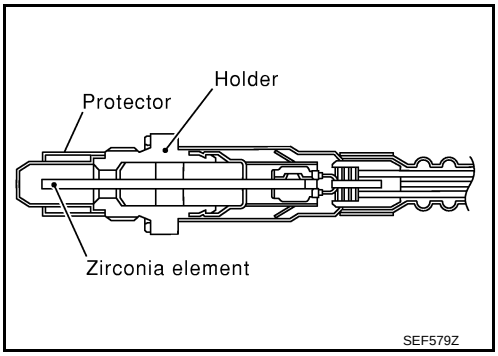

An electronic circuit controls the pump current through the oxygen-pump cell so that the composition of the exhaust gas in the diffusion gap remains constant at λ = 1. Therefore, the A/F sensor is able to indicate air/fuel ratio by this pumping of current. In addition, a heater is integrated in the sensor to ensure the required operating temperature of 700 - 800°C (1,292 - 1,472°F).

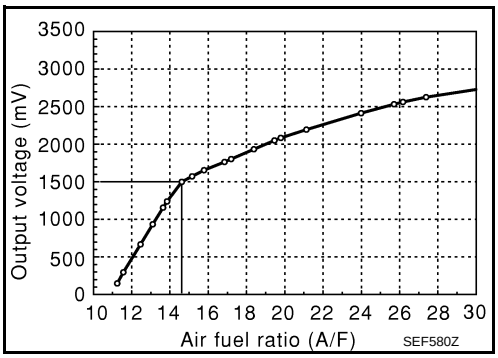

CONSULT-III Reference Value in Data Monitor Mode

INFOID:0000000001717699

Specification data are reference values.

MONITOR ITEM	CONDITION		SPECIFICATION
A/F SEN1 (B1) A/F SEN1 (B2)	• Engine: After warming up	Maintaining engine speed at 2,000 rpm	Fluctuates around 1.5V

On Board Diagnosis Logic

INFOID:0000000001717700

To judge the malfunction, the A/F signal computed by ECM from the air fuel ratio (A/F) sensor 1 signal is monitored not to be shifted to LEAN side or RICH side.

DTC No.	Trouble diagnosis name	DTC detecting condition	Possible Cause
P2A00 2A00 (Bank 1)	Air fuel ratio (A/F) sensor 1 circuit range/performance	• The output voltage computed by ECM from the A/F sensor 1 signal is shifted to the lean side for a specified period. • The A/F signal computed by ECM from the A/F sensor 1 signal is shifted to the rich side for a specified period.	• Air fuel ratio (A/F) sensor 1 • Air fuel ratio (A/F) sensor 1 heater • Fuel pressure • Fuel injector • Intake air leaks
P2A03 2A03 (Bank 2)			

DTC Confirmation Procedure

INFOID:0000000001717701

NOTE:
If DTC Confirmation Procedure has been previously conducted, always perform the following before conducting the next step.
1. Turn ignition switch OFF and wait at least 10 seconds.
2. Turn ignition switch ON.
3. Turn ignition switch OFF and wait at least 10 seconds.

TESTING CONDITION:
Before performing the following procedure, confirm that battery voltage is more than 11V at idle.

WITH CONSULT-III

1. Start engine and warm it up to normal operating temperature.
2. Turn ignition switch OFF and wait at least 10 seconds.
3. Turn ignition switch ON.
4. Turn ignition switch OFF and wait at least 10 seconds.
5. Turn ignition switch ON and select “SELF-LEARNING CONT” in “WORK SUPPORT” mode with CONSULT-III.
6. Clear the self-learning coefficient by touching “CLEAR”.
7. Turn ignition switch OFF and wait at least 10 seconds.
8. Turn ignition switch ON.
9. Turn ignition switch OFF and wait at least 10 seconds.
10. Start engine and keep the engine speed between 3,500 and 4,000 rpm for 1 minute under no load.
11. Let engine idle for 1 minute.
12. Keep engine speed between 2,500 and 3,000 rpm for 20 minutes.
13. Check 1st trip DTC.
14. If 1st trip DTC is detected, go to EC-559, "Diagnosis Procedure".

WITH GST

1. Start engine and warm it up to normal operating temperature.
2. Turn ignition switch OFF and wait at least 10 seconds.
3. Turn ignition switch ON.
4. Turn ignition switch OFF and wait at least 10 seconds.
5. Disconnect mass air flow sensor harness connector.
6. Start engine and let it idle for at least 5 seconds.
7. Stop engine and reconnect mass air flow sensor harness connector.
8. Select Service $03 with GST and make sure that DTC P0102 is detected.
9. Select Service $04 with GST and erase the DTC P0102.
10. Start engine and keep the engine speed between 3,500 and 4,000 rpm for 1 minute under no load.
11. Let engine idle for 1 minute.
12. Keep engine speed between 2,500 and 3,000 rpm for 20 minutes.
13. Select Service $07 with GST.
    If 1st trip DTC is detected, go to EC-559, "Diagnosis Procedure".

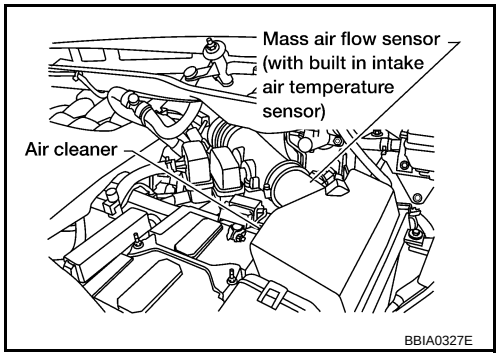

Wiring Diagram

INFOID:0000000001717702

BANK 1

EC-AF1B1-01

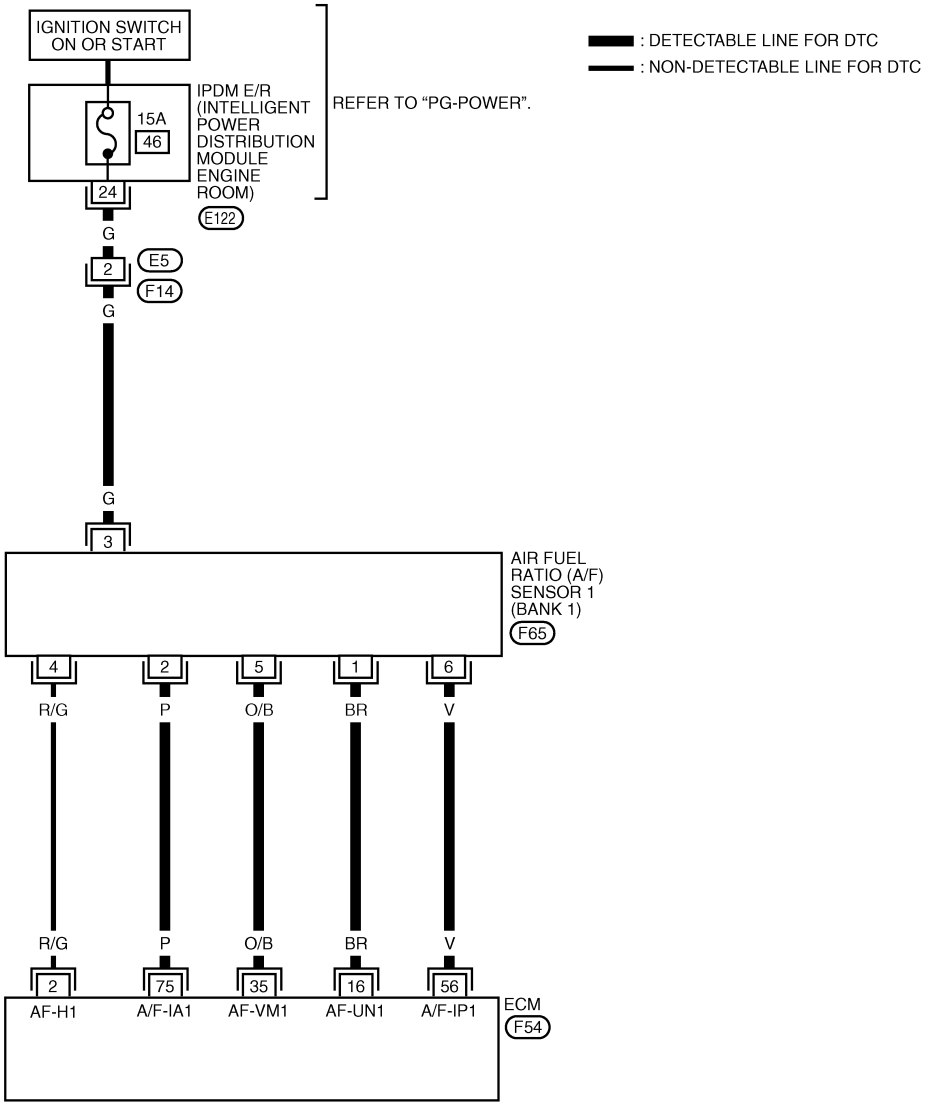

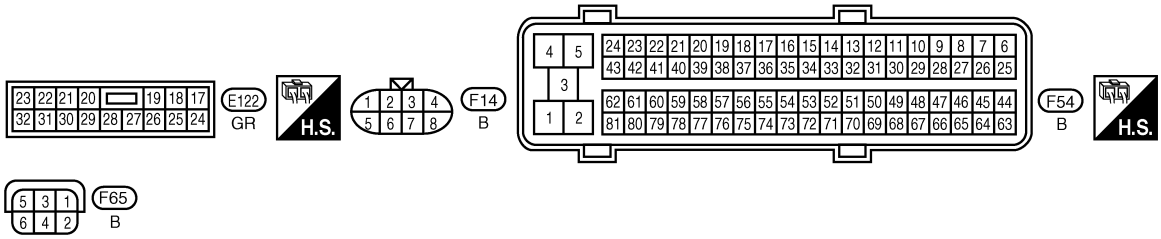

BBWA2503E

Specification data are reference values and are measured between each terminal and ground.
Pulse signal is measured by CONSULT-III.

CAUTION:

Do not use ECM ground terminals when measuring input/output voltage. Doing so may result in damage to the ECM's transistor. Use a ground other than ECM terminals, such as the ground.

TERMINAL NO.	WIRE COLOR	ITEM	CONDITION	DATA (DC Voltage)
2	R/G	A/F sensor 1 heater (Bank 1)	**[Engine is running]** • **Warm-up condition** • Idle speed	Approximately 5V★ 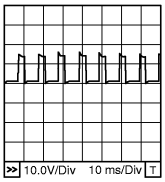 PBIB1584E
16	BR	A/F sensor 1 (Bank 1)	**[Engine is running]** • **Warm-up condition** • Idle speed	Approximately 3.1V
35	O/B			Approximately 2.6V
56	V			Approximately 2.3V
75	P			Approximately 2.3V

★: Average voltage for pulse signal (Actual pulse signal can be confirmed by oscilloscope.)

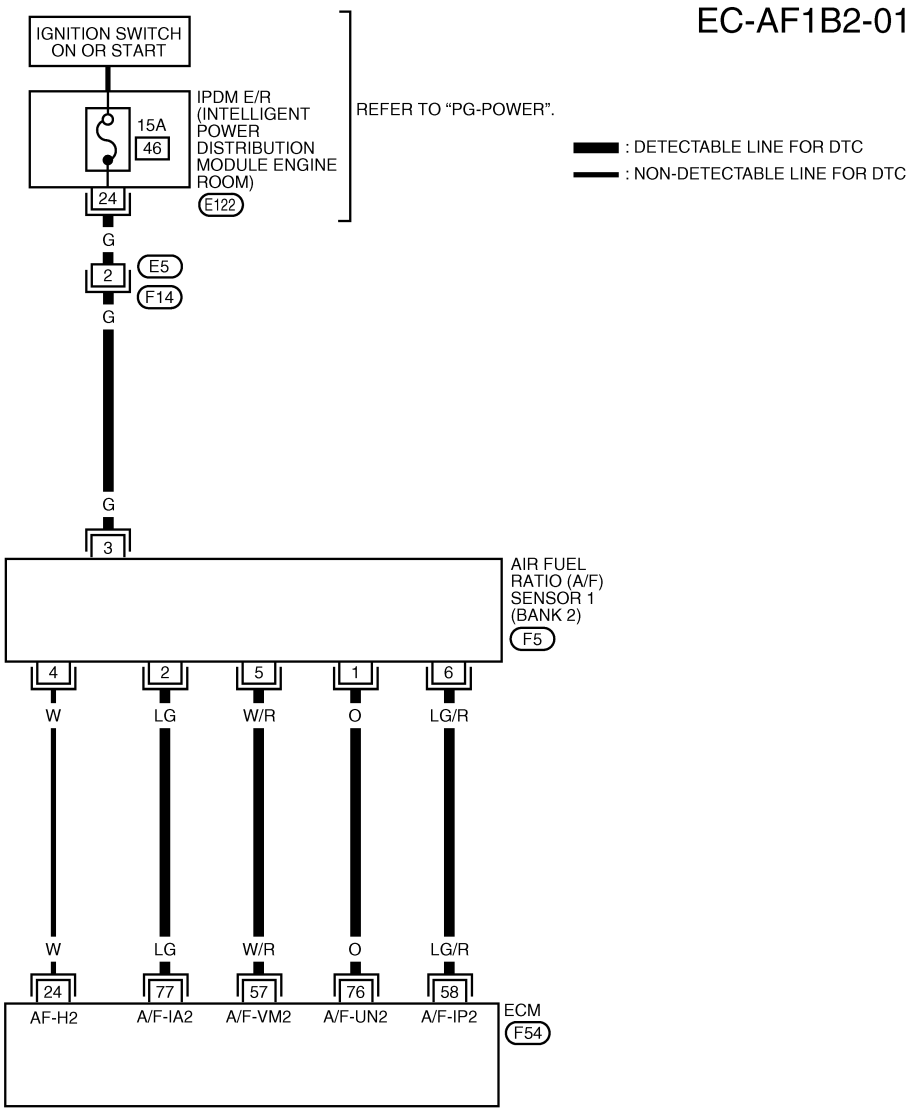

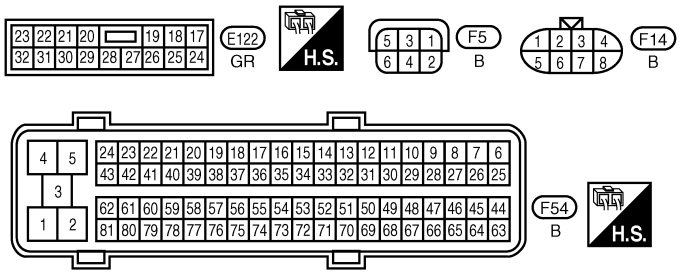

BBWA2504E

Specification data are reference values and are measured between each terminal and ground.
Pulse signal is measured by CONSULT-III.

CAUTION:

Do not use ECM ground terminals when measuring input/output voltage. Doing so may result in damage to the ECM's transistor. Use a ground other than ECM terminals, such as the ground.

TERMINAL NO.	WIRE COLOR	ITEM	CONDITION	DATA (DC Voltage)
24	W	A/F sensor 1 heater (Bank 2)	**[Engine is running]** • **Warm-up condition** • Idle speed	Approximately 5V★ 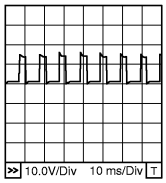 PBIB1584E
57	W/R	A/F sensor 1 (Bank 2)	**[Engine is running]** • **Warm-up condition** • Idle speed	Approximately 2.6V
58	LG/R			Approximately 2.3V
76	O			Approximately 3.1V
77	LG			Approximately 2.3V

★: Average voltage for pulse signal (Actual pulse signal can be confirmed by oscilloscope.)

Diagnosis Procedure

INFOID:0000000001717703

1. CHECK GROUND CONNECTIONS

1. Turn ignition switch OFF.
2. Loosen and retighten three ground screws on the body. Refer to EC-138, "Ground Inspection".

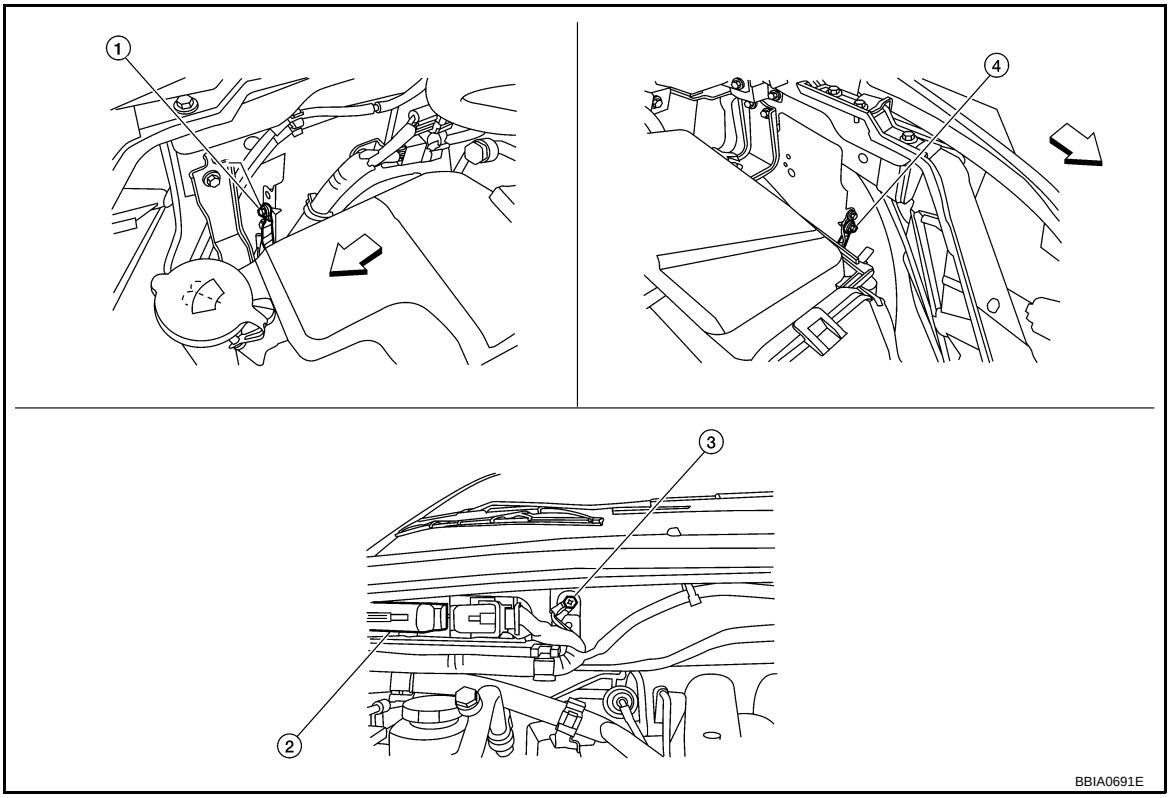

⇦: Vehicle front

1. Body ground E24
2. ECM
3. Body ground E9
4. Body ground E15

OK or NG

OK >> GO TO 2.
NG >> Repair or replace ground connections.

2. RETIGHTEN AIR FUEL RATIO (A/F) SENSOR 1

Loosen and retighten the air fuel ratio (A/F) sensor 1.
Refer to EM-25, "Removal and Installation".

>> GO TO 3.

3. CHECK FOR INTAKE AIR LEAK

1. Start engine and run it at idle.
2. Listen for an intake air leak after the mass air flow sensor.

OK or NG

OK >> GO TO 4.
NG >> Repair or replace.

4. CLEAR THE SELF-LEARNING DATA.

With CONSULT-III

1. Start engine and warm it up to normal operating temperature.
2. Select “SELF-LEARNING CONT” in “WORK SUPPORT” mode with CONSULT-III.
3. Clear the self-learning control coefficient by touching “CLEAR”.
4. Run engine for at least 10 minutes at idle speed.
   Is the 1st trip DTC P0171, P0172, P0174 and P0175 detected?
   Is it difficult to start engine?

Without CONSULT-III

1. Start engine and warm it up to normal operating temperature.
2. Turn ignition switch OFF.
3. Disconnect mass air flow sensor harness connector.
4. Restart engine and let it idle for at least 5 seconds.
5. Stop engine and reconnect mass air flow sensor harness connector.
6. Make sure DTC P0102 is displayed.
7. Erase the DTC memory. Refer to EC-43, "Emission-related Diagnostic Information".
8. Make sure DTC P0000 is displayed.
9. Run engine for at least 10 minutes at idle speed.
   Is the 1st trip DTC P0171, P0172, P0174 and P0175 detected?
   Is it difficult to start engine?

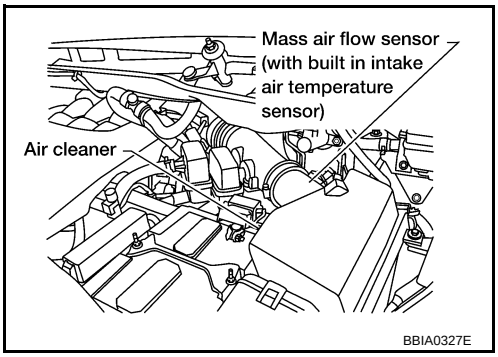

Yes or No

Yes >> Perform trouble diagnosis for DTC P0171, P0174 or P0172, P0175. Refer to EC-271 or EC-281.
No >> GO TO 5.

5. CHECK HARNESS CONNECTOR

1. Turn ignition switch OFF.
2. Disconnect A/F sensor 1 harness connector.

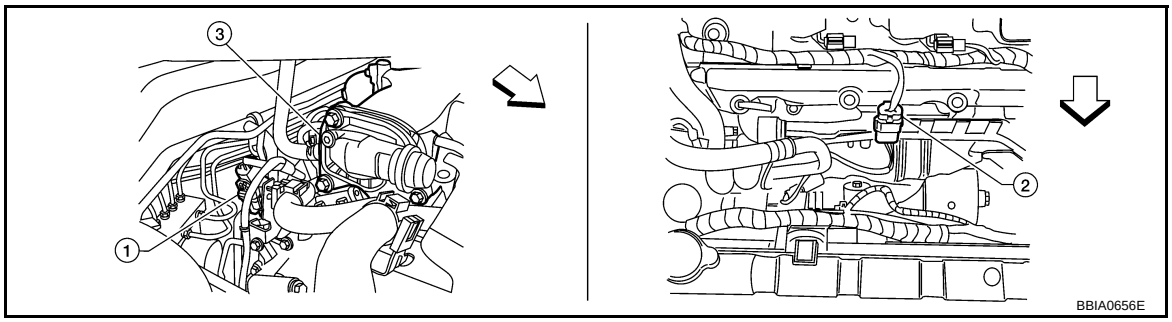

⇦: Vehicle front

1. Air fuel ratio (A/F) sensor 1 (bank 1) harness connector
2. Air fuel ratio (A/F) sensor 1 (bank 2) harness connector
3. Intake manifold collector

3. Check harness connector for water.
Water should not exist.

OK or NG

OK >> GO TO 6.
NG >> Repair or replace harness connector.

6. CHECK AIR FUEL RATIO (A/F) SENSOR 1 POWER SUPPLY CIRCUIT

1. Turn ignition switch ON.
2. Check voltage between A/F sensor 1 terminal 3 and ground with CONSULT-III or tester.

Voltage: Battery voltage

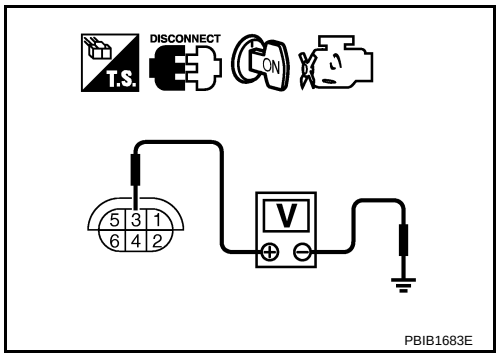

OK or NG

OK >> GO TO 8.
NG >> GO TO 7.

7. DETECT MALFUNCTIONING PART

Check the following.
- Harness connectors E5, F14
- IPDM E/R harness connector E122
- 15A fuse
- Harness for open or short between A/F sensor 1 and fuse

>> Repair or replace harness or connectors.

8. CHECK A/F SENSOR 1 INPUT SIGNAL CIRCUIT FOR OPEN AND SHORT

1. Turn ignition switch OFF.
2. Disconnect ECM harness connector.
3. Check harness continuity between the following terminals.
Refer to Wiring Diagram.

	A/F sensor 1 terminal	ECM terminal
Bank1	1	16
	2	75
	5	35
	6	56
Bank 2	1	76
	2	77
	5	57
	6	58

Continuity should exist.

4. Check harness continuity between the following terminals and ground.
Refer to Wiring Diagram.

Bank 1		Bank 2	
A/F sensor 1 terminal	ECM terminal	A/F sensor 1 terminal	ECM terminal
1	16	1	76
2	75	2	77
5	35	5	57
6	56	6	58

Continuity should not exist.

5. Also check harness for short to power.

OK or NG

OK >> GO TO 9.
NG >> Repair open circuit or short to ground or short to power in harness or connectors.

9. CHECK A/F SENSOR 1 HEATER

Refer to EC-152, "Component Inspection".

OK or NG

OK >> GO TO 10.
NG >> GO TO 11.

10. CHECK INTERMITTENT INCIDENT

Perform EC-130.

OK or NG

OK >> GO TO 11.
NG >> Repair or replace.

11. REPLACE AIR FUEL RATIO (A/F) SENSOR 1

Replace malfunctioning air fuel ratio (A/F) sensor 1.

CAUTION:

- **Discard any air fuel ratio (A/F) sensor which has been dropped from a height of more than 0.5 m (19.7 in) onto a hard surface such as a concrete floor; use a new one.**
- **Before installing new air fuel ratio (A/F) sensor, clean exhaust system threads using Heated Oxygen Sensor Thread Cleaner tool J-43897-18 or J-43897-12 and approved anti-seize lubricant.**

>> GO TO 12.

12. CONFIRM A/F ADJUSTMENT DATA

1. Turn ignition switch ON.
2. Select “A/F ADJ-B1” and “A/F ADJ-B2” in “DATA MONITOR” mode with CONSULT-III.
3. Make sure that “0.000” is displayed on CONSULT-III screen.

OK or NG

OK >> **INSPECTION END**
NG >> GO TO 13.

13. CLEAR A/F ADJUSTMENT DATA

With CONSULT-III

1. Start engine and warm it up to normal operating temperature.
2. Select “SELF-LEARNING CONT” in “WORK SUPPORT” mode with CONSULT-III.
3. Clear the self-learning control coefficient by touching “CLEAR”.

Without CONSULT-III

1. Start engine and warm it up to normal operating temperature.
2. Turn ignition switch OFF.

3. Disconnect mass air flow sensor harness connector.
4. Restart engine and let it idle for at least 5 seconds.
5. Stop engine and reconnect mass air flow sensor harness connector.
6. Make sure DTC P0102 is displayed.
7. Erase the DTC memory. Refer to EC-43, "Emission-related Diagnostic Information".
8. Make sure DTC P0000 is displayed.

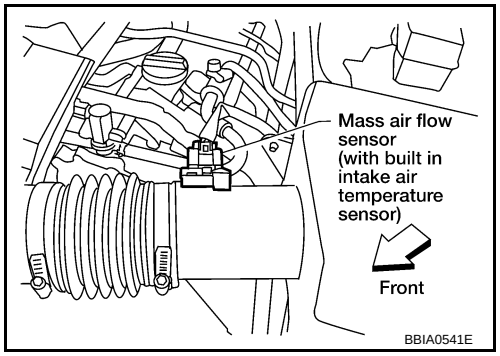

>> GO TO 14.

14. CONFIRM A/F ADJUSTMENT DATA

1. Turn ignition switch OFF and then ON.
2. Select “A/F ADJ-B1” and “A/F ADJ-B2” in “DATA MONITOR” mode with CONSULT-III.
3. Make sure that “0.000” is displayed on CONSULT-III screen.

>> **INSPECTION END**

Removal and Installation

INFOID:0000000001717704

AIR FUEL RATIO (A/F) SENSOR 1

Refer to EM-25.

ASCD BRAKE SWITCH

Component Description

INFOID:0000000001717705

When the brake pedal is depressed, ASCD brake switch is turned OFF and stop lamp switch is turned ON. ECM detects the state of the brake pedal by this input of two kinds (ON/OFF signal).
Refer to EC-25 for the ASCD function.

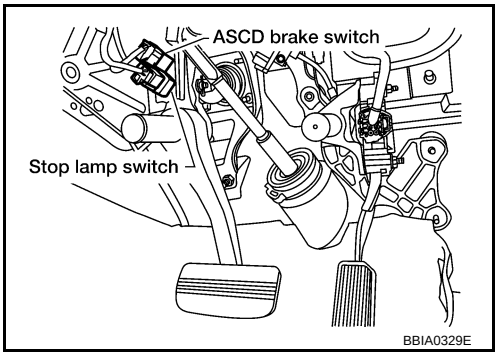

CONSULT-III Reference Value in Data Monitor Mode

INFOID:0000000001717706

Specification data are reference values.

MONITOR ITEM	CONDITION		SPECIFICATION
BRAKE SW1 (ASCD brake switch)	• Ignition switch: ON	Brake pedal: Fully released	ON
		Brake pedal: Slightly depressed	OFF
BRAKE SW2 (Stop lamp switch)	• Ignition switch: ON	Brake pedal: Fully released	OFF
		Brake pedal: Slightly depressed	ON

Wiring Diagram

INFOID:0000000001717707

EC-ASCBOF-01

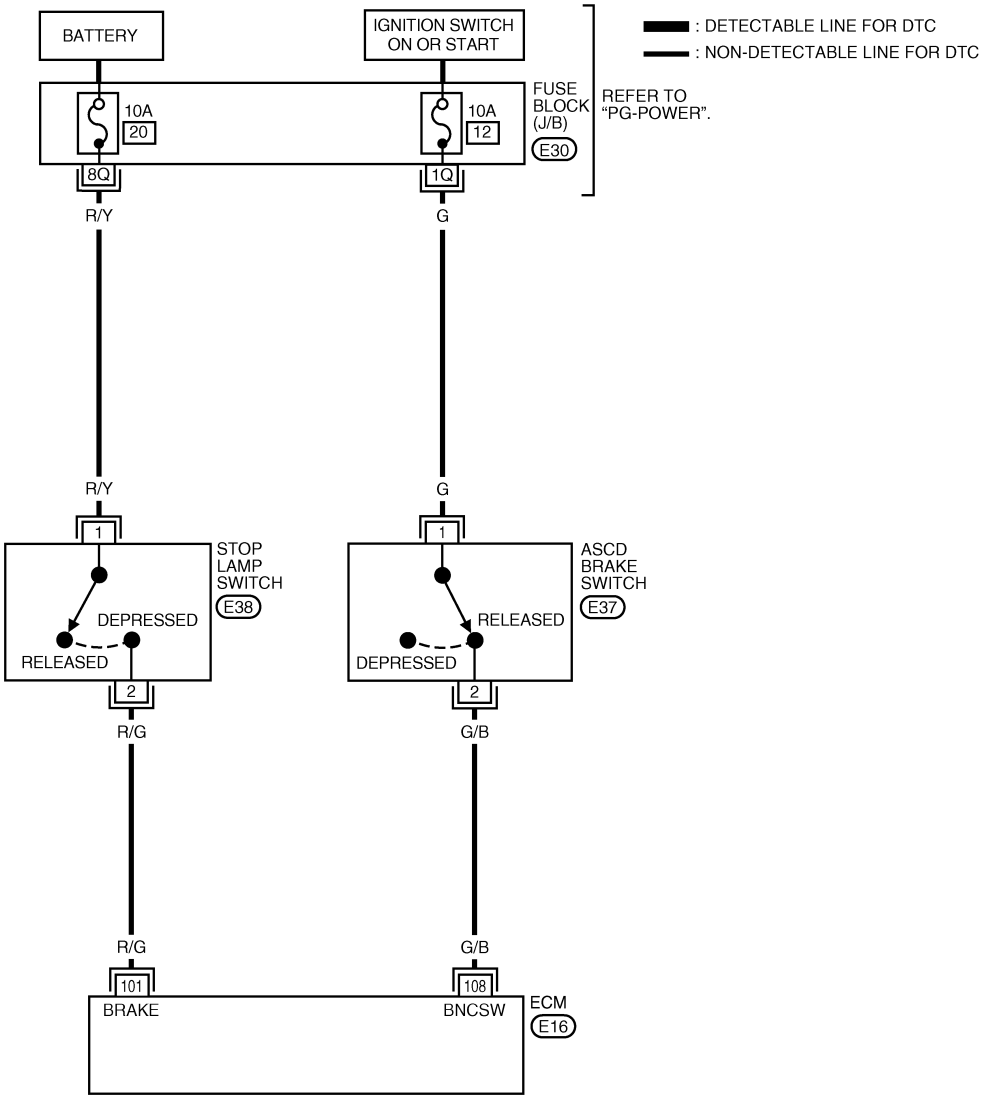

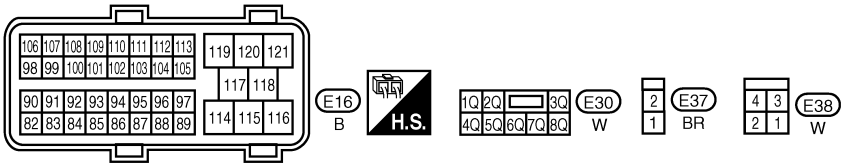

BBWA2542E

Specification data are reference values and are measured between each terminal and ground.

CAUTION:

Do not use ECM ground terminals when measuring input/output voltage. Doing so may result in damage to the ECM's transistor. Use a ground other than ECM terminals, such as the ground.

TER-MI-NAL NO.	WIRE COLOR	ITEM	CONDITION	DATA (DC Voltage)
101	R/G	Stop lamp switch	**[Ignition switch: OFF]** • Brake pedal: Fully released	Approximately 0V
			[Ignition switch: OFF] • Brake pedal: Slightly depressed	BATTERY VOLTAGE (11 - 14V)
108	G/B	ASCD brake switch	**[Ignition switch: ON]** • Brake pedal: Fully released	BATTERY VOLTAGE (11 - 14V)
			[Ignition switch: ON] • Brake pedal: Slightly depressed	Approximately 0V

Diagnosis Procedure

INFOID:0000000001717708

1. CHECK OVERALL FUNCTION-I

With CONSULT-III

1. Turn ignition switch ON.
2. Select “BRAKE SW1” in “DATA MONITOR” mode with CONSULT-III.
3. Check “BRAKE SW1” indication under the following conditions.

CONDITION	INDICATION
Brake pedal: Slightly depressed	OFF
Brake pedal: Fully released	ON

Without CONSULT-III

1. Turn ignition switch ON.
2. Check voltage between ECM terminal 108 and ground under the following conditions.

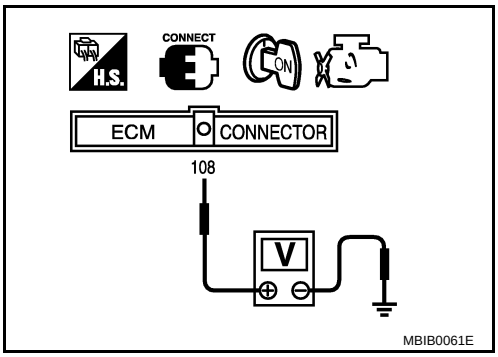

CONDITION	VOLTAGE
Brake pedal: Slightly depressed	Approximately 0V
Brake pedal: Fully released	Battery voltage

OK or NG

OK >> GO TO 2.
NG >> GO TO 3.

2. CHECK OVERALL FUNCTION-II

With CONSULT-III

Check “BRAKE SW2” indication in “DATA MONITOR” mode.

CONDITION	INDICATION
Brake pedal: Fully released	OFF
Brake pedal: Slightly depressed	ON

Without CONSULT-III

Check voltage between ECM terminal 101 and ground under the following conditions.

CONDITION	VOLTAGE
Brake pedal: Fully released	Approximately 0V
Brake pedal: Slightly depressed	Battery voltage

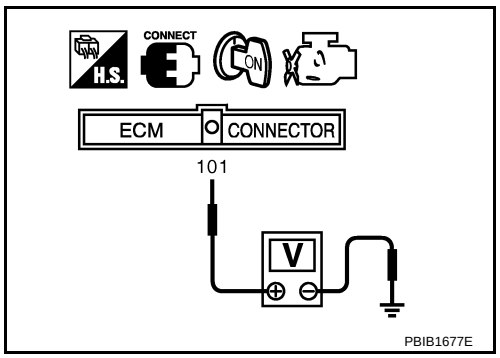

OK or NG

OK >> **INSPECTION END**
NG >> GO TO 7.

3. CHECK ASCD BRAKE SWITCH POWER SUPPLY CIRCUIT

1. Turn ignition switch OFF.
2. Disconnect ASCD brake switch harness connector.
3. Turn ignition switch ON.

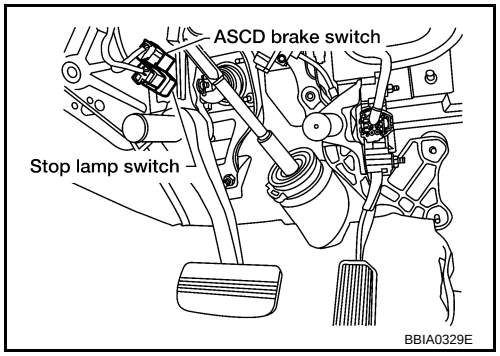

4. Check voltage between ASCD brake switch terminal 1 and ground with CONSULT-III or tester.

Voltage: Battery voltage

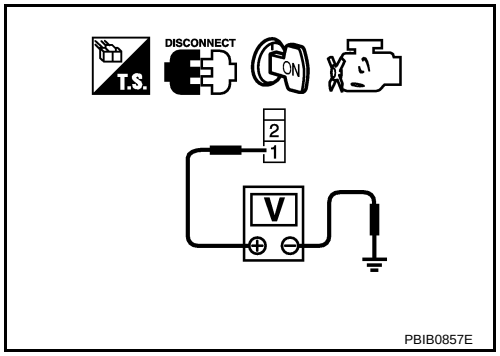

OK or NG

OK >> GO TO 5.
NG >> GO TO 4.

4. DETECT MALFUNCTIONING PART

Check the following.
- Fuse block (J/B) connector E30
- 10A fuse
- Harness for open or short between ASCD brake switch and fuse

>> Repair open circuit or short to ground or short to power in harness or connectors.

5. CHECK ASCD BRAKE SWITCH INPUT SIGNAL CIRCUIT FOR OPEN AND SHORT

1. Turn ignition switch OFF.
2. Disconnect ECM harness connector.
3. Check harness continuity between ECM terminal 108 and ASCD brake switch terminal 2. Refer to Wiring Diagram.

Continuity should exist.

4. Also check harness for short to ground and short to power.

OK or NG

OK >> GO TO 6.
NG >> Repair open circuit or short to ground or short to power in harness or connectors.

6. CHECK ASCD BRAKE SWITCH

Refer to EC-569, "Component Inspection".

OK or NG

OK >> GO TO 11.
NG >> Replace ASCD brake switch.

7. CHECK STOP LAMP SWITCH POWER SUPPLY CIRCUIT

1. Turn ignition switch OFF.
2. Disconnect stop lamp switch harness connector.

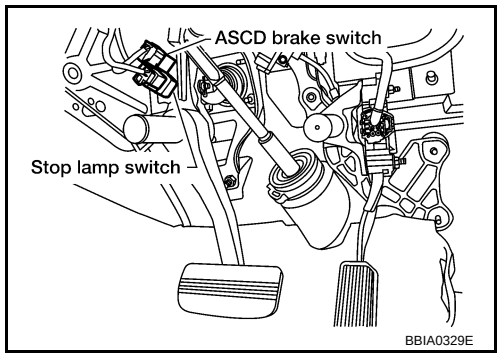

3. Check voltage between stop lamp switch terminal 1 and ground with CONSULT -II or tester.

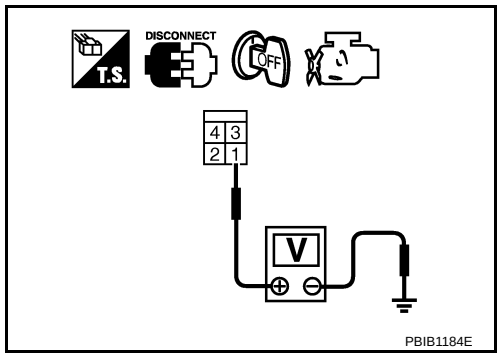

Voltage: Battery voltage

OK or NG

OK >> GO TO 9.
NG >> GO TO 8.

8. DETECT MALFUNCTIONING PART

Check the following.
- Fuse block (J/B) connector E30
- 10A fuse
- Harness for open or short between stop lamp switch and battery

>> Repair open circuit or short to ground or short to power in harness or connectors.

9. CHECK STOP LAMP SWITCH INPUT SIGNAL CIRCUIT FOR OPEN AND SHORT

1. Disconnect ECM harness connector.
2. Check harness continuity between ECM terminal 101 and stop lamp switch terminal 2. Refer to Wiring Diagram.

Continuity should exist.

3. Also check harness for short to ground and short to power.

OK or NG

OK >> GO TO 10.
NG >> Repair open circuit or short to ground or short to power in harness or connectors.

10. CHECK STOP LAMP SWITCH

Refer to EC-569, "Component Inspection".

OK or NG

OK >> GO TO 11.
NG >> Replace stop lamp switch.

11. CHECK INTERMITTENT INCIDENT

Refer to EC-130.

>> **INSPECTION END**

Component Inspection

INFOID:0000000001717709

ASCD BRAKE SWITCH

1. Turn ignition switch OFF.
2. Disconnect ASCD brake switch harness connector.
3. Check harness continuity between ASCD brake switch terminals 1 and 2 under the following conditions.

Condition	Continuity
Brake pedal: Fully released	Should exist
Brake pedal: Slightly depressed	Should not exist

If NG, adjust ASCD brake switch installation, refer to BR-5, and perform step 3 again.

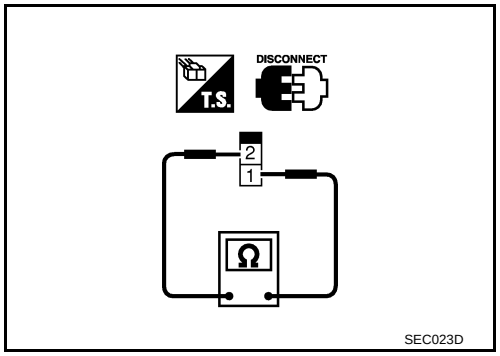

STOP LAMP SWITCH

1. Turn ignition switch OFF.
2. Disconnect stop lamp switch harness connector.
3. Check harness continuity between stop lamp switch terminals 1 and 2 under the following conditions.

Condition	Continuity
Brake pedal: Fully released	Should not exist
Brake pedal: Slightly depressed	Should exist

If NG, adjust stop lamp switch installation, refer to BR-5, and perform step 3 again.

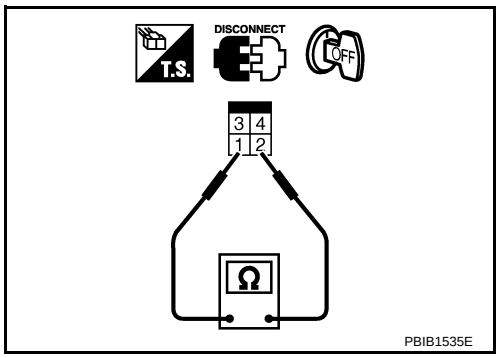

ASCD INDICATOR

Component Description

INFOID:0000000001717710

ASCD indicator lamp illuminates to indicate ASCD operation status. Lamp has two indicators, CRUISE and SET, and is integrated in combination meter.
CRUISE indicator illuminates when MAIN switch on ASCD steering switch is turned ON to indicate that ASCD system is ready for operation.
SET indicator illuminates when following conditions are met.
- CRUISE indicator is illuminated.
- SET/COAST switch on ASCD steering switch is turned ON while vehicle speed is within the range of ASCD setting.

SET indicator remains lit during ASCD control.
Refer to EC-25 for the ASCD function.

CONSULT-III Reference Value in Data Monitor Mode

INFOID:0000000001717711

Specification data are reference value.

MONITOR ITEM	CONDITION		SPECIFICATION
CRUISE LAMP	• Ignition switch: ON	MAIN switch: Pressed at the 1st time → at the 2nd time	ON → OFF
SET LAMP	• MAIN switch: ON • When vehicle speed is between 40 km/h (25 MPH) and 144 km/h (89 MPH)	ASCD: Operating	ON
		ASCD: Not operating	OFF

Wiring Diagram

INFOID:0000000001717712

EC-ASCIND-01

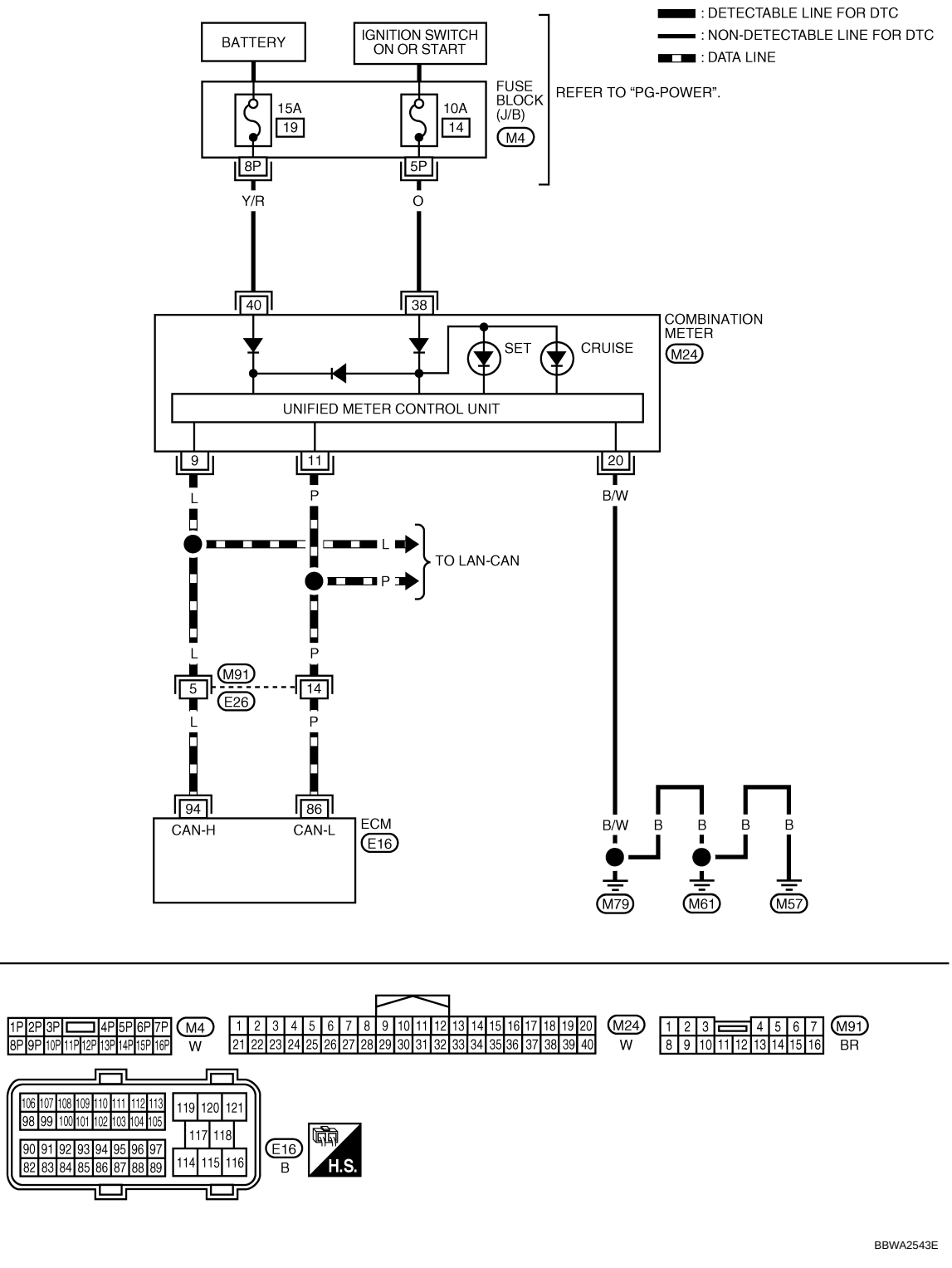

Diagnosis Procedure

INFOID:0000000001717713

1. CHECK OVERALL FUNCTION

Check ASCD indicator under the following conditions.

ASCD INDICATOR	CONDITION		SPECIFICATION
CRUISE LAMP	• Ignition switch: ON	MAIN switch: Pressed at the 1st time → at the 2nd time	ON → OFF
SET LAMP	• MAIN switch: ON • When vehicle speed is between 40 km/h (25 MPH) and 144 km/h (89 MPH)	ASCD: Operating	ON
		ASCD: Not operating	OFF

OK or NG

OK >> **INSPECTION END**
NG >> GO TO 2.

2. CHECK DTC

Check that DTC U1000 or U1001 is not displayed.

OK or NG

OK >> GO TO 3.
NG >> Perform trouble diagnoses for DTC U1000, U1001. Refer to EC-139.

3. CHECK COMBINATION METER OPERATION

Does combination meter operate normally?

Yes or No

Yes >> GO TO 4.
No >> Check combination meter circuit. Refer to DI-5.

4. CHECK INTERMITTENT INCIDENT

Refer to EC-130.

>> **INSPECTION END**

ELECTRICAL LOAD SIGNAL

Description

INFOID:0000000001717714

The electrical load signal (Headlamp switch signal, rear window defogger switch signal, etc.) is transferred through the CAN communication line from BCM to ECM via IPDM E/R.

CONSULT-III Reference Value in Data Monitor Mode

INFOID:0000000001717715

Specification data are reference values.

MONITOR ITEM	CONDITION		SPECIFICATION
LOAD SIGNAL	• Ignition switch: ON	Rear window defogger switch is ON and/or lighting switch is in 2nd.	ON
		Rear window defogger switch is OFF and lighting switch is OFF.	OFF
HEATER FAN SW	• Ignition switch: ON	Heater fan: Operating	ON
		Heater fan: Not operating	OFF

Diagnosis Procedure

INFOID:0000000001717716

1. CHECK LOAD SIGNAL CIRCUIT OVERALL FUNCTION-I

1. Turn ignition switch ON.
2. Connect CONSULT-III and select “DATA MONITOR” mode.
3. Select “LOAD SIGNAL” and check indication under the following conditions.

Condition	Indication
Rear window defogger switch: ON	ON
Rear window defogger switch: OFF	OFF

OK or NG

OK >> GO TO 2.
NG >> GO TO 4.

2. CHECK LOAD SIGNAL CIRCUIT OVERALL FUNCTION-II

Check “LOAD SIGNAL” indication under the following conditions.

Condition	Indication
Lighting switch: ON at 2nd position	ON
Lighting switch: OFF	OFF

OK or NG

OK >> GO TO 3.
NG >> GO TO 5.

3. CHECK HEATER FAN SIGNAL CIRCUIT OVERALL FUNCTION

Check “HEATER FAN SW” in “DATA MONITOR” mode with CONSULT-III under the following conditions.

Condition	LOAD SIGNAL
Heater fan control switch: ON	ON
Heater fan control switch: OFF	OFF

OK or NG

OK >> **INSPECTION END**.
NG >> GO TO 6.

4. CHECK REAR WINDOW DEFOGGER SYSTEM

Refer to GW-76.

>> **INSPECTION END**

5. CHECK HEADLAMP SYSTEM

Refer to LT-5 or LT-25.

>> **INSPECTION END**

6. CHECK HEATER FAN CONTROL SYSTEM

Refer to ATC-28 or MTC-27.

>> **INSPECTION END**

ELECTRONIC CONTROLLED ENGINE MOUNT

System Description

INFOID:0000000001717717

Sensor	Input Signal to ECM	ECM function	Actuator
Crankshaft position sensor (POS) Camshaft position sensor (PHASE)	Engine speed	Engine mount control	Electronic controlled engine mount
Wheel sensor	Vehicle speed*		

*: This signal is sent to the ECM through CAN communication line.

The ECM controls the engine mount operation corresponding to the engine speed and the vehicle speed. The control system has 2-step control [Soft/Hard]

Vehicle condition	Engine mount control
Engine speed: Below 950 rpm	Soft
Engine speed: Above 950 rpm	Hard

CONSULT-III Reference Value in Data Monitor Mode

INFOID:0000000001717718

Specification data are reference values.

MONITOR ITEM	CONDITION		SPECIFICATION
ENGINE MOUNT	• Engine: Running	Engine speed: Below 950 rpm	IDLE
		Engine speed: Above 950 rpm	TRVL

Wiring Diagram

INFOID:0000000001717719

EC-EMNT-01

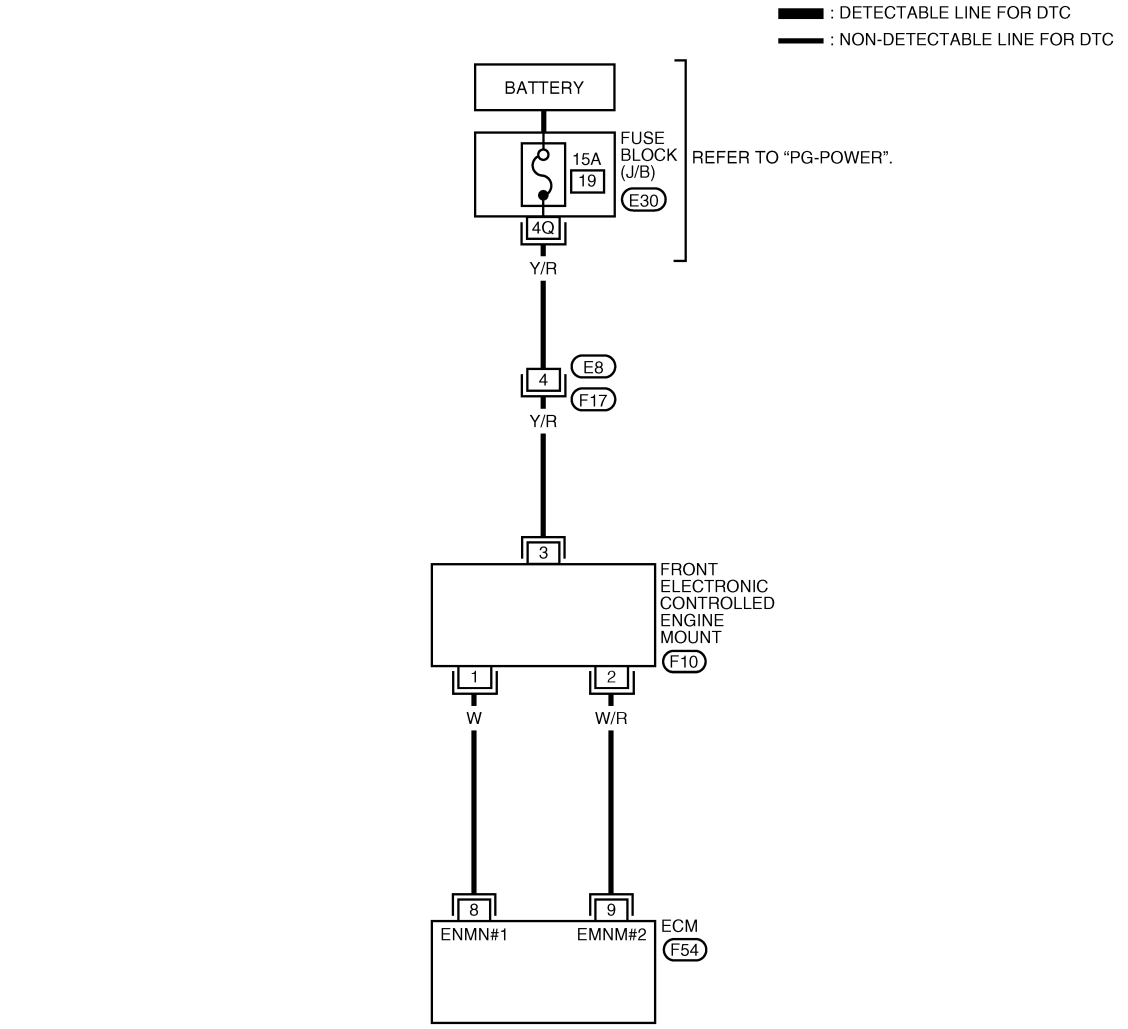

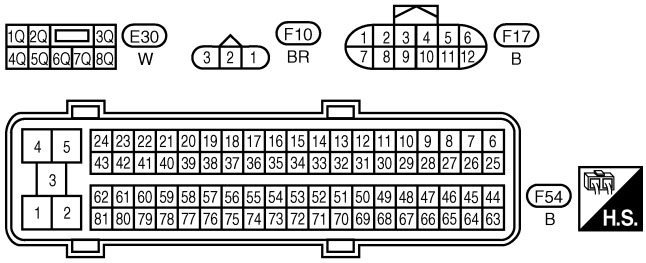

BBWA2007E

Specification data are reference values and are measured between each terminal and ground.

CAUTION:

Do not use ECM ground terminals when measuring input/output voltage. Doing so may result in damage to the ECM's transistor. Use a ground other than ECM terminals, such as the ground.

TERMINAL NO.	WIRE COLOR	ITEM	CONDITION	DATA (DC Voltage)
8	W	Electronic controlled engine mount-1	**[Engine is running]** • Engine speed: Above 950 rpm	BATTERY VOLTAGE (11 - 14V)
			[Engine is running] • For 2 seconds after engine speed: 950 rpm or less	0 - 1.0V
			[Engine is running] • 2 seconds after engine speed: 950 rpm or less	2.0 - 3.0V
9	W/R	Electronic controlled engine mount-2	**[Engine is running]** • Engine speed: Below 950 rpm	BATTERY VOLTAGE (11 - 14V)
			[Engine is running] • For 2 seconds after engine speed: 950 rpm or more	0 - 1.0V
			[Engine is running] • 2 seconds after engine speed: 950 rpm or more	2.0 - 3.0V

Diagnosis Procedure

INFOID:0000000001717720

1. CHECK OVERALL FUNCTION

With CONSULT-III

1. Start engine and warm it up to normal operating temperature.
2. Select “ENGINE MOUNTING” in “ACTIVE TEST” mode with CONSULT-III and touch “ON/OFF” on the CINSULT-II screen.
3. Check that the motor operating sound is heard from front electronic controlled engine mount for about 0.5 seconds according to the switching condition of “ENGINE MOUNTING”.

Without CONSULT-III

1. Make sure that gear position is P or N.
2. Start engine and let it idle.
3. Change the engine speed from idle to more than 1,000 rpm and then return to idle (with vehicle stopped).
4. Check that the motor operating sound is heard from front electronic controlled engine mount for about 0.5 seconds when changing engine speed.
   It is better to hear the operating sound around the left side front wheel house.

OK or NG

OK >> **INSPECTION END**
NG >> GO TO 2.

2. CHECK ELECTRONIC CONTROLLED ENGINE MOUNT POWER SUPPLY CIRCUIT

1. Turn ignition switch OFF.
2. Disconnect electronic controlled engine mount harness connector.

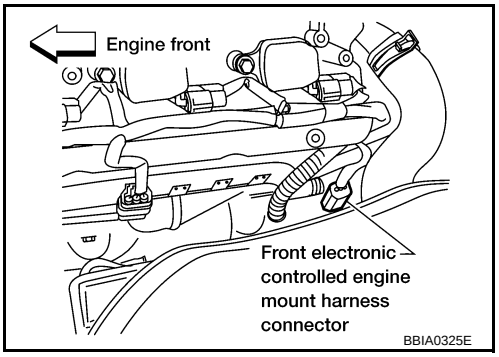

3. Check voltage between electronic controlled engine mount terminal 3 and ground with CONSULT-III or tester.

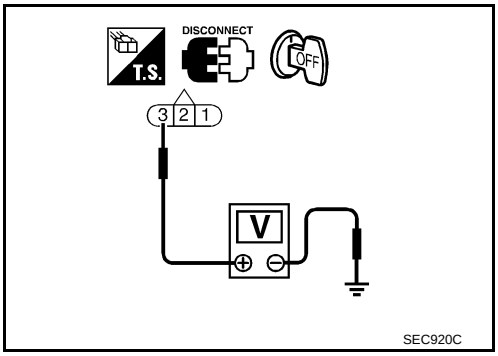

Voltage: Battery voltage

OK or NG

OK >> GO TO 4.
NG >> GO TO 3.

3. DETECT MALFUNCTIONING PART

Check the following.
- Harness connectors E8, F17
- Fuse block (J/B) connector E30
- 15A fuse
- Harness for open and short between electronic controlled engine mount and battery

>> Repair harness or connectors.

4. CHECK ELECTRONIC CONTROLLED ENGINE MOUNT OUTPUT SIGNAL CIRCUIT FOR OPEN AND SHORT

1. Turn ignition switch OFF.
2. Disconnect ECM harness connector.
3. Check harness continuity between ECM terminals and electronic engine mount terminals as follows. Refer to Wiring Diagram.

ECM terminal	Electronic controlled engine mount terminal
8	1
9	2

Continuity should exist.

4. Also check harness for short to ground and short to power.

OK or NG

OK >> GO TO 5.
NG >> Repair open circuit or short to ground or short to power in harness or connectors.

5. CHECK ELECTRONIC CONTROLLED ENGINE MOUNT

Visually check electronic controlled engine mount.

OK or NG

OK >> GO TO 6.
NG >> Replace electronic controlled engine mount.

6. CHECK INTERMITTENT INCIDENT

Refer to EC-130.

>> **INSPECTION END**

FUEL INJECTOR

Component Description

INFOID:0000000001717721

The fuel injector is a small, precise solenoid valve. When the ECM supplies a ground to the fuel injector circuit, the coil in the fuel injector is energized. The energized coil pulls the ball valve back and allows fuel to flow through the fuel injector into the intake manifold. The amount of fuel injected depends upon the injection pulse duration. Pulse duration is the length of time the fuel injector remains open. The ECM controls the injection pulse duration based on engine fuel needs.

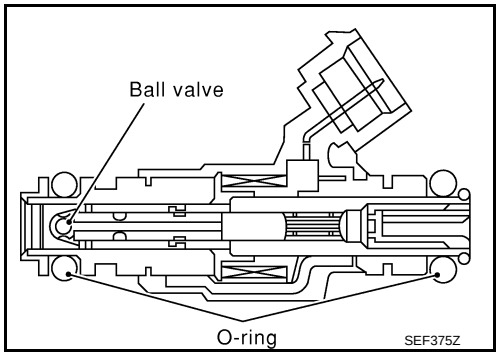

CONSULT-III Reference Value in Data Monitor Mode

INFOID:0000000001717722

Specification data are reference values.

MONITOR ITEM	CONDITION		SPECIFICATION
B/FUEL SCHDL	• EC-122.		
INJ PULSE-B1 INJ PULSE-B2	• Engine: After warming up • Shift lever: P or N • Air conditioner switch: OFF • No load	Idle	2.0 - 3.0 msec
		2,000 rpm	1.9 - 2.9 msec

Wiring Diagram

INFOID:0000000001717723

EC-INJECT-01

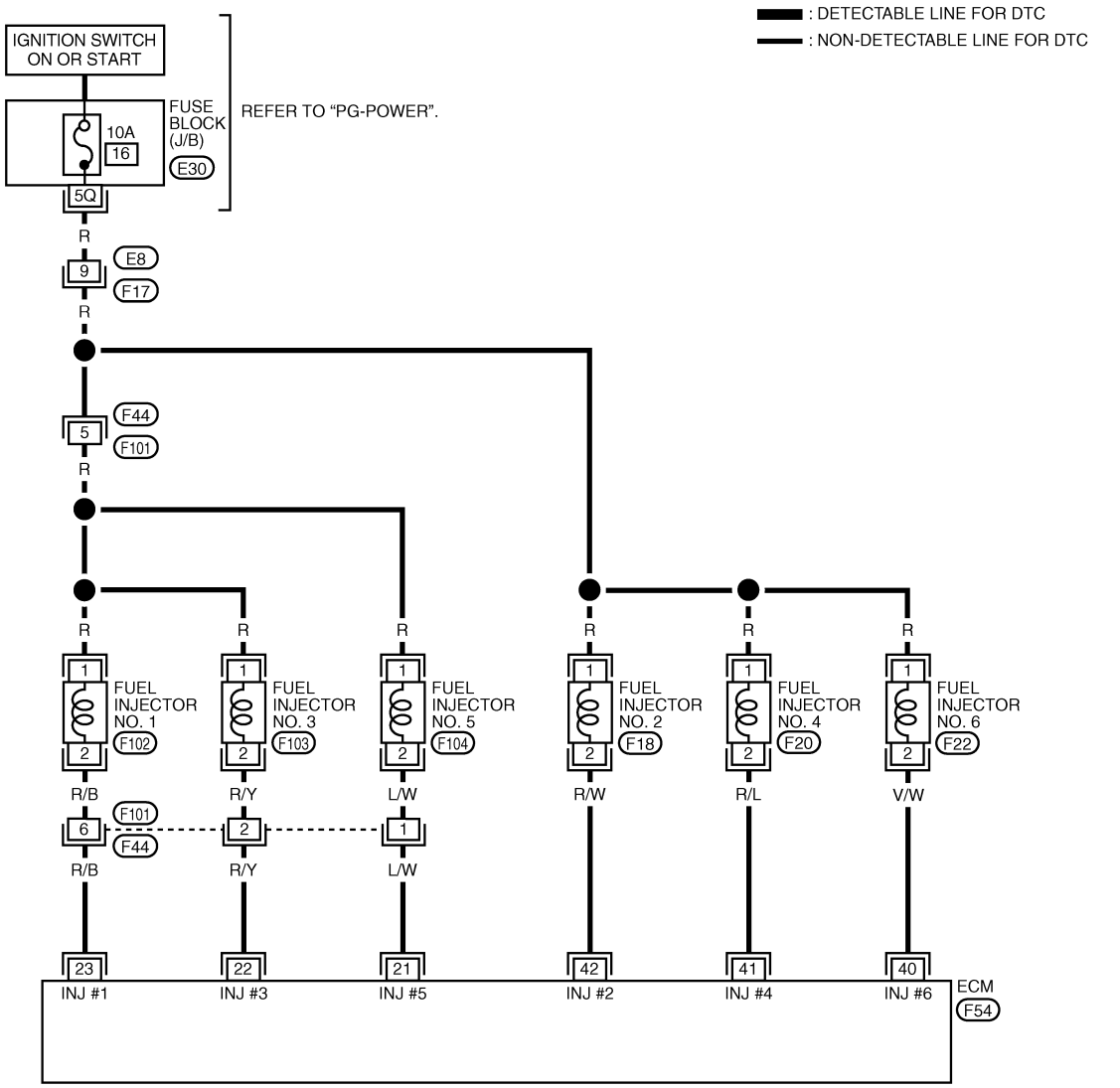

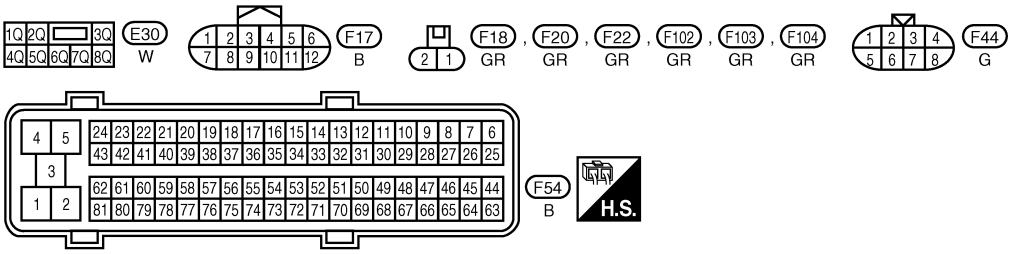

BBWA2539E

Specification data are reference values and are measured between each terminal and ground.
Pulse signal is measured by CONSULT-III.

CAUTION:

Do not use ECM ground terminals when measuring input/output voltage. Doing so may result in damage to the ECM's transistor. Use a ground other than ECM terminals, such as the ground.

TERMINAL NO.	WIRE COLOR	ITEM	CONDITION	DATA (DC Voltage)
21 22 23 40 41 42	L/W R/Y R/B V/W R/L R/W	Fuel injector No. 5 Fuel injector No. 3 Fuel injector No. 1 Fuel injector No. 6 Fuel injector No. 4 Fuel injector No. 2	**[Engine is running]** • **Warm-up condition** • Idle speed **NOTE:** The pulse cycle changes depending on rpm at idle	BATTERY VOLTAGE (11 - 14V) ★ 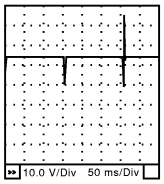 SEC984C
			[Engine is running] • **Warm-up condition** • Engine speed: 2,000 rpm.	BATTERY VOLTAGE (11 - 14V) ★ 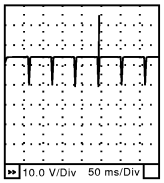 SEC985C

★: Average voltage for pulse signal (Actual pulse signal can be confirmed by oscilloscope.)

Diagnosis Procedure

INFOID:0000000001717724

1. INSPECTION START

Turn ignition switch to START.
Is any cylinder ignited?

Yes or No

Yes (With CONSULT-III)>>GO TO 2.
Yes (Without CONSULT-III)>>GO TO 3.
No >> GO TO 7.

2. CHECK OVERALL FUNCTION

With CONSULT-III

1. Start engine.
2. Perform “POWER BALANCE” in “ACTIVE TEST” mode with CONSULT-III.
3. Make sure that each circuit produces a momentary engine speed drop.

OK or NG

OK >> **INSPECTION END**
NG >> GO TO 7.

3. CHECK FUNCTION OF FUEL INJECTOR-I

Without CONSULT-III

1. Stop engine.

2. Disconnect harness connector F44 (2), F101 (3).
3. Turn ignition switch ON.

- ⇦: Vehicle front
- Intake manifold collector (1)

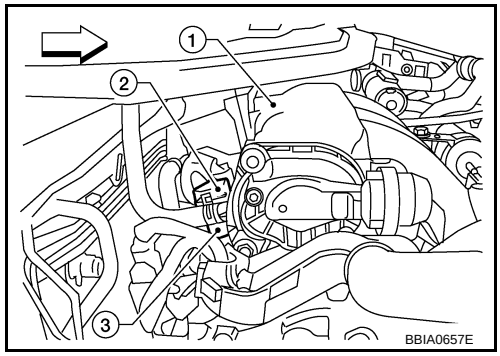

4. Check voltage between harness connector F44 terminal 5 and ground with CONSULT-III or tester.

Voltage: Battery voltage

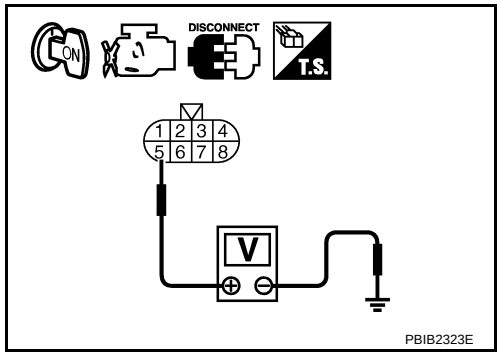

5. Turn ignition switch OFF.
6. Disconnect ECM harness connector.
7. Check harness continuity between harness connector F44 terminal and ECM terminal as follows.
   Refer to Wiring Diagram.

Cylinder	Harness connector F44 terminal	ECM terminal
1	6	23
3	2	22
5	1	21

Continuity should exist.

8. Also check harness for short to ground and short to power.

OK or NG

OK >> GO TO 5.
NG >> GO TO 4.

4. DETECT MALFUNCTIONING PART

Check the following.
- Harness connectors E8, F17
- Fuse block (J/B) connector E30
- 10A fuse
- Harness for open or short between harness connector F44 and fuse
- Harness for open or short between harness connector F44 and ECM

>> Repair open circuit or short to ground or short to power in harness or connectors.

5. CHECK FUNCTION OF FUEL INJECTOR-II

Provide battery voltage between harness connector F101 as follows and then interrupt it. Listen to each fuel injector operating sound.

Cylinder	Harness connector F101 terminal	
	(+)	(–)
1	5	6
3	5	2
5	5	1

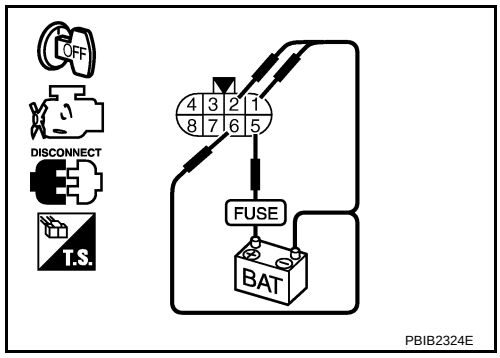

Operating sound should exist.

OK or NG

OK >> GO TO 6.
NG >> GO TO 7.

6. CHECK FUNCTION OF FUEL INJECTOR-III

1. Reconnect all harness connector disconnected.
2. Start engine.
3. Listen to fuel injectors No. 2, No. 4, No.6 operating sound.

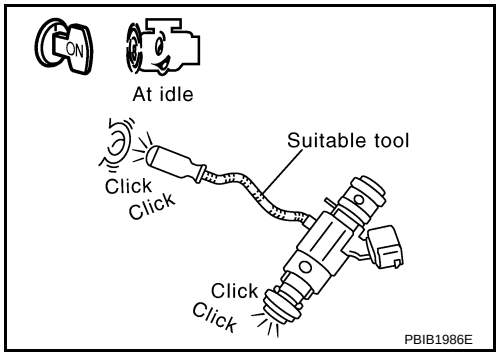

Clicking noise should exist.

OK or NG

OK >> **INSPECTION END**
NG >> GO TO 7.

7. CHECK FULE INJECTOR POWER SUPPLY CIRCUIT

1. Turn ignition switch OFF.
2. Disconnect fuel injector harness connector.

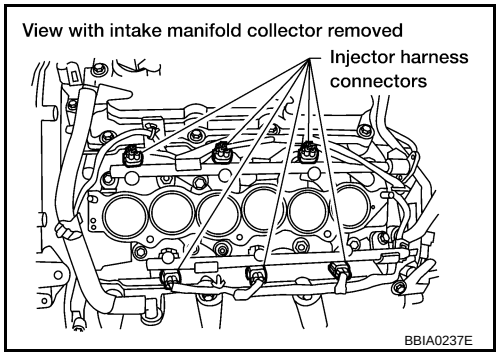

3. Turn ignition switch ON.
4. Check voltage between fuel injector terminal 1 and ground with CONSULT-III or tester.

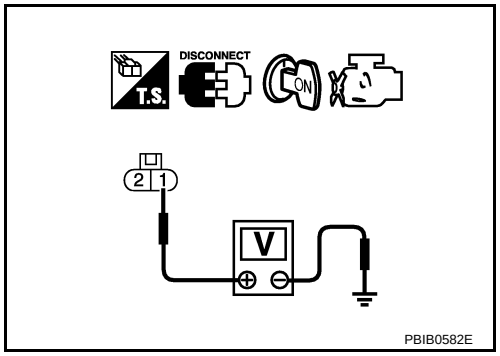

Voltage: Battery voltage

OK or NG

OK >> GO TO 9.
NG >> GO TO 8.

8. DETECT MALFUNCTIONING PART

Check the following.
- Harness connectors E8, F17
- Harness connectors F44, F101
- Fuse block (J/B) connector E30
- 10A fuse
- Harness for open or short between fuel injector and fuse

>> Repair harness or connectors.

9. CHECK FUEL INJECTOR OUTPUT SIGNAL CIRCUIT FOR OPEN AND SHORT

1. Turn ignition switch OFF.
2. Disconnect ECM harness connector.
3. Check harness continuity between fuel injector terminal 2 and ECM terminals 21, 22, 23, 40, 41, 42. Refer to Wiring Diagram.

Continuity should exist.

4. Also check harness for short to ground and short to power.

OK or NG

OK >> GO TO 11.
NG >> GO TO 10.

10. DETECT MALFUNCTIONING PART

Check the following.
- Harness connectors F101, F44
- Harness for open or short between fuel injector and ECM

>> Repair open circuit or short to ground or short to power in harness or connectors.

11. CHECK FUEL INJECTOR

Refer to EC-584, "Component Inspection".

OK or NG

OK >> GO TO 12.
NG >> Replace fuel injector.

12. CHECK INTERMITTENT INCIDENT

Refer to EC-130.

>> **INSPECTION END**

Component Inspection

INFOID:0000000001717725

FUEL INJECTOR

1. Disconnect fuel injector harness connector.
2. Check resistance between terminals as shown in the figure.

Resistance: 11.1 - 14.5Ω [at 10 - 60°C (50 - 140°F)]

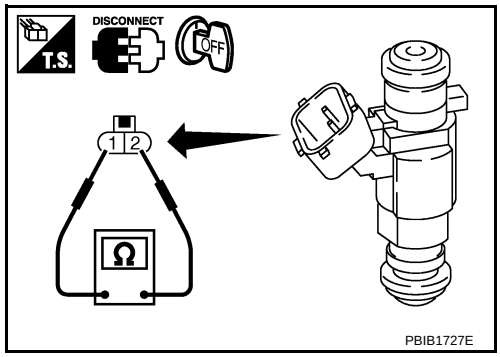

Removal and Installation

INFOID:0000000001717726

FUEL INJECTOR

Refer to EM-38.

FUEL PUMP

Description

INFOID:0000000001717727

SYSTEM DESCRIPTION

Sensor	Input Signal to ECM	ECM Function	Actuator
Crankshaft position sensor (POS) Camshaft position sensor (PHASE)	Engine speed*	Fuel pump control	Fuel pump relay
Battery	Battery voltage*		

*: ECM determines the start signal status by the signals of engine speed and battery voltage.

The ECM activates the fuel pump for 1 second after the ignition switch is turned ON to improve engine start-ability. If the ECM receives a engine speed signal from the camshaft position sensor (PHASE), it knows that the engine is rotating, and causes the pump to operate. If the engine speed signal is not received when the ignition switch is ON, the engine stalls. The ECM stops pump operation and prevents battery discharging, thereby improving safety. The ECM does not directly drive the fuel pump. It controls the ON/OFF fuel pump relay, which in turn controls the fuel pump.

Condition	Fuel pump operation
Ignition switch is turned to ON.	Operates for 1 second.
Engine running and cranking	Operates.
When engine is stopped	Stops in 1.5 seconds.
Except as shown above	Stops.

COMPONENT DESCRIPTION

A turbine type design fuel pump is used in the fuel tank.

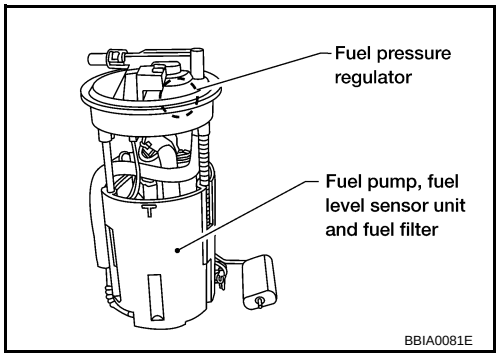

CONSULT-III Reference Value in Data Monitor Mode

INFOID:0000000001717728

Specification data are reference values.

MONITOR ITEM	CONDITION	SPECIFICATION
FUEL PUMP RLY	• For 1 second after turning ignition switch ON • Engine running or cranking	ON
	• Except above conditions	OFF

Wiring Diagram

INFOID:0000000001717729

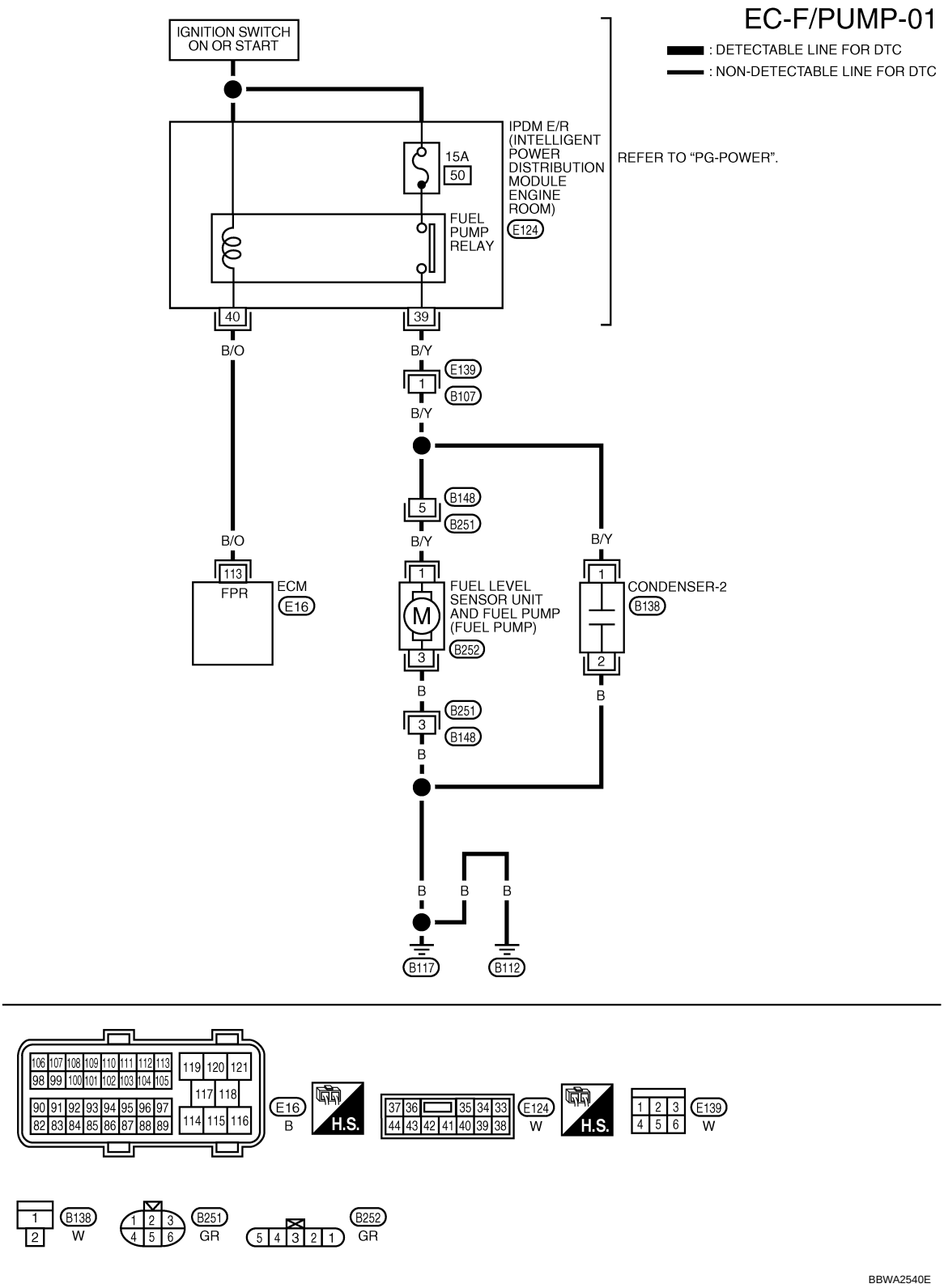

Specification data are reference values and are measured between each terminal and ground.

CAUTION:

Do not use ECM ground terminals when measuring input/output voltage. Doing so may result in damage to the ECM's transistor. Use a ground other than ECM terminals, such as the ground.

TERMINAL NO.	WIRE COLOR	ITEM	CONDITION	DATA (DC Voltage)
113	B/O	Fuel pump relay	**[Ignition switch: ON]** • For 1 second after turning ignition switch ON **[Engine is running]**	0 - 1.5V
			[Ignition switch: ON] • More than 1 second after turning ignition switch ON	BATTERY VOLTAGE (11 - 14V)

Diagnosis Procedure

INFOID:0000000001717730

1. CHECK OVERALL FUNCTION

1. Turn ignition switch ON.
2. Pinch fuel feed hose with two fingers.

Fuel pressure pulsation should be felt on the fuel feed hose for 1 second after ignition switch is turned ON.

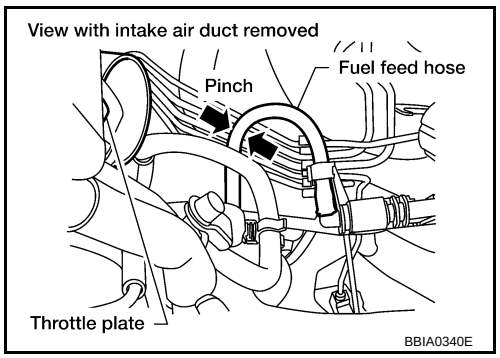

OK or NG

OK >> **INSPECTION END**
NG >> GO TO 2.

2. CHECK FUEL PUMP POWER SUPPLY CIRCUIT-I

1. Turn ignition switch OFF.
2. Disconnect ECM harness connector.
3. Turn ignition switch ON.
4. Check voltage between ECM terminal 113 and ground with CONSULT-III or tester.

Voltage: Battery voltage

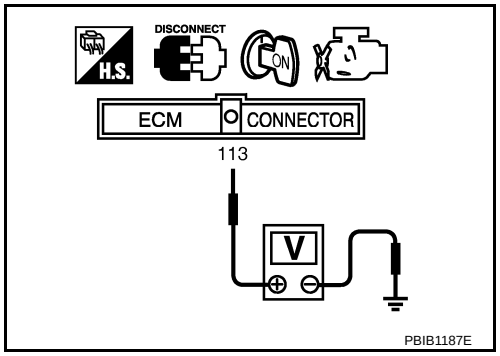

OK or NG

OK >> GO TO 4.
NG >> GO TO 3.

3. CHECK FUEL PUMP POWER SUPPLY CIRCUIT-I

1. Turn ignition switch OFF.
2. Disconnect IPDM E/R harness connector E124.
3. Check harness continuity between IPDM E/R terminal 40 and ECM terminal 113. Refer to Wiring Diagram.

Continuity should exist.

4. Also check harness for short to ground and short to power.

OK or NG

OK >> GO TO 13.
NG >> Repair open circuit or short to power or short to ground in harness or connectors.

4. CHECK CONDENSER-2 POWER SUPPLY CIRCUIT-I

1. Turn ignition switch OFF.
2. Reconnect all harness connectors disconnected.

3. Disconnect condenser-2 harness connector.
4. Turn ignition switch ON.
5. Check voltage between condenser-2 terminal 1 and ground with CONSULT-III or tester.

Voltage: Battery voltage should exist for 1 second after ignition switch is turned ON.

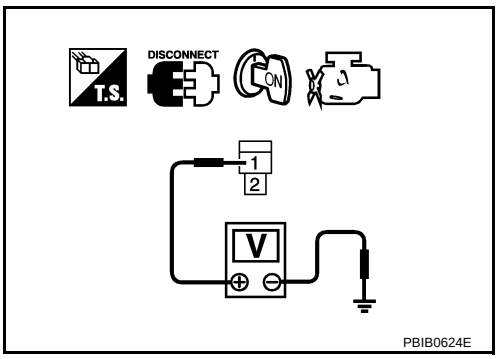

OK or NG

OK >> GO TO 8.
NG >> GO TO 5.

5. CHECK 15A FUSE

1. Turn ignition switch OFF.
2. Disconnect 15A fuse.
3. Check 15A fuse.

OK or NG

OK >> GO TO 6.
NG >> Replace fuse.

6. CHECK CONDENSER-2 POWER SUPPLY CIRCUIT-II

1. Disconnect IPDM E/R harness connector E124.
2. Check harness continuity between IPDM E/R terminal 39 and condenser-2 terminal 1. Refer to Wiring Diagram.

Continuity should exist.

3. Also check harness for short to ground and short to power.

OK or NG

OK >> GO TO 13.
NG >> GO TO 7.

7. DETECT MALFUNCTIONING PART

Check the following.
- Harness connectors B107, E139
- Harness for open or short between IPDM E/R and condenser-2

>> Repair harness or connectors.

8. CHECK CONDENSER-2 GROUND CIRCUIT FOR OPEN AND SHORT

1. Check harness continuity between condenser-2 terminal 2 and ground. Refer to Wiring Diagram.

Continuity should exist.

2. Also check harness for short to power.

OK or NG

OK >> GO TO 9.
NG >> Repair open circuit or short to power in harness or connectors.

9. CHECK CONDENSER-2

Refer to EC-589, "Component Inspection".

OK or NG

OK >> GO TO 10.
NG >> Replace condenser-2.

10. CHECK FUEL PUMP POWER SUPPLY AND GROUND CIRCUIT FOR OPEN AND SHORT

1. Turn ignition switch OFF.
2. Disconnect “fuel level sensor unit and fuel pump” harness connector.
3. Disconnect harness connectors E139, B107
4. Check harness continuity between “fuel level sensor unit and fuel pump” terminal 1 and harness connector B107 terminal 1, “fuel level sensor unit and fuel pump” terminal 3 and ground. Refer to Wiring Diagram.

Continuity should exist.

5. Also check harness for short to ground and short to power.

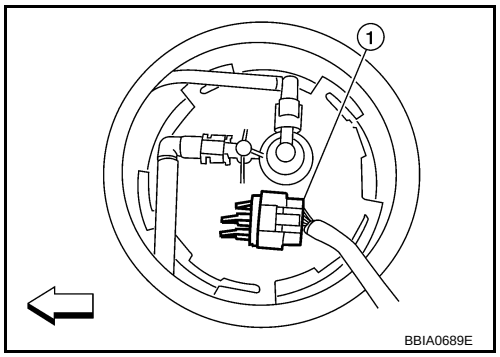

OK or NG

OK >> GO TO 12.
NG >> GO TO 11.

11. DETECT MALFUNCTIONING PART

Check the following.
- Harness connector B107
- Harness connectors B148, E251
- Harness for open or short between harness connector B107 and “fuel level sensor unit and fuel pump”
- Harness for open or short between “fuel level sensor unit and fuel pump”and ground

>> Repair harness or connectors.

12. CHECK FUEL PUPMP

Refer to EC-589, "Component Inspection".

OK or NG

OK >> GO TO 13.
NG >> Replace “fuel level sensor unit and fuel pump”.

13. CHECK INTERMITTENT INCIDENT

Refer to EC-130.

OK or NG

OK >> Replace IPDM E/R. Refer to PG-17.
NG >> Repair or replace harness or connectors.

Component Inspection

INFOID:0000000001717731

FUEL PUMP

1. Disconnect “fuel level sensor unit and fuel pump” harness connector.
2. Check resistance between “fuel level sensor unit and fuel pump” terminals 1 and 3.

Resistance: Approximately 0.2 - 5.0Ω [at 25°C (77°F)]

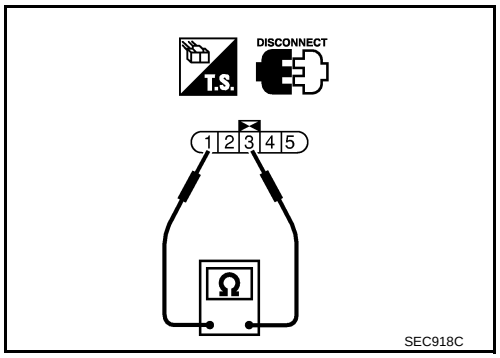

CONDENSER-2

1. Turn ignition switch OFF.
2. Disconnect condenser-2 harness connector.

3. Check resistance between condenser-2 terminals as 1 and 2.

Resistance: Above 1 MΩ [at 25°C (77°F)]

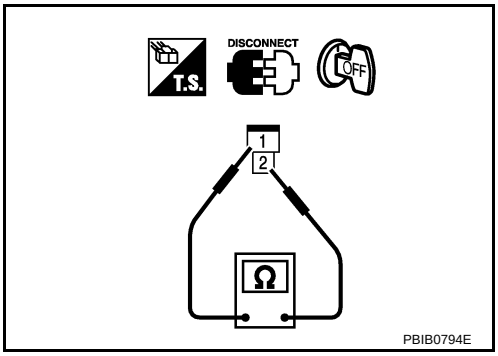

Removal and Installation

INFOID:0000000001717732

FUEL PUMP
Refer to FL-5.

IGNITION SIGNAL

Component Description

INFOID:0000000001717733

IGNITION COIL & POWER TRANSISTOR

The ignition signal from the ECM is sent to and amplified by the power transistor. The power transistor turns ON and OFF the ignition coil primary circuit. This ON/OFF operation induces the proper high voltage in the coil secondary circuit.

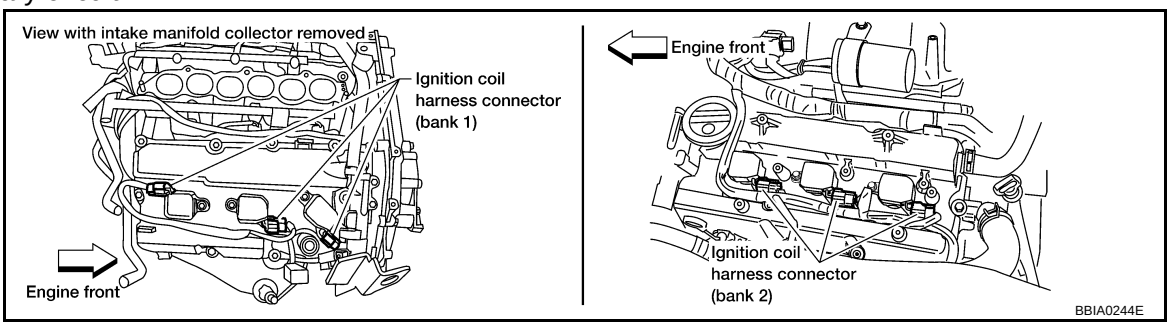

Wiring Diagram

INFOID:0000000001717734

EC-IGNSYS-01

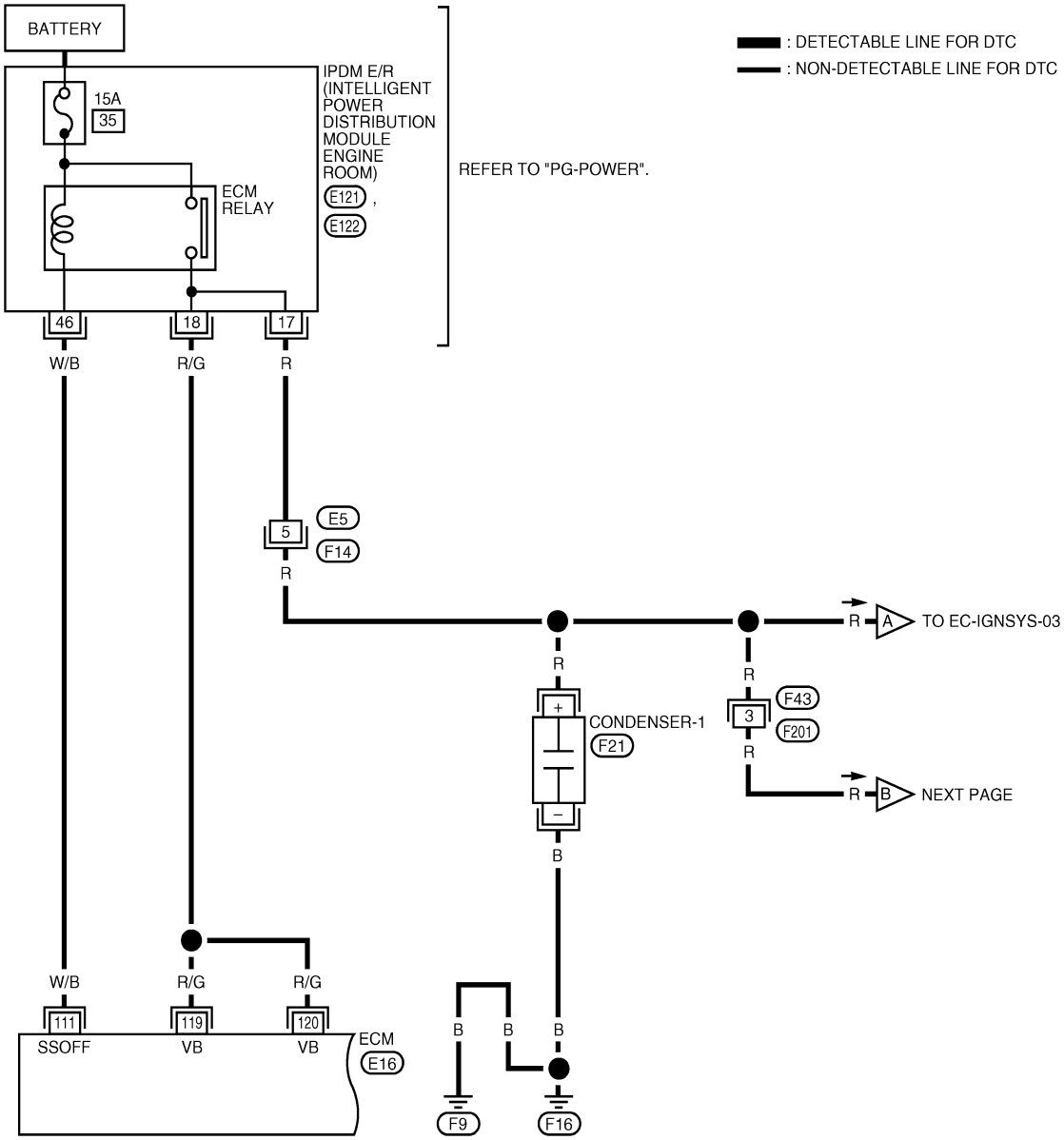

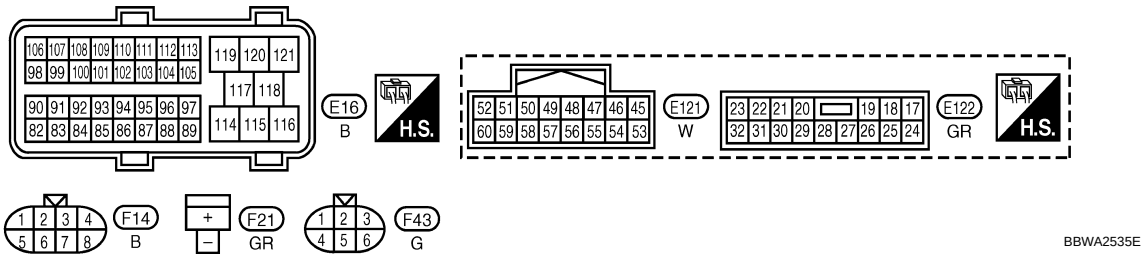

Specification data are reference values and are measured between each terminal and ground.

CAUTION:

Do not use ECM ground terminals when measuring input/output voltage. Doing so may result in damage to the ECM's transistor. Use a ground other than ECM terminals, such as the ground.

TERMINAL NO.	WIRE COLOR	ITEM	CONDITION	DATA (DC Voltage)
111	W/B	ECM relay (Self shut-off)	**[Engine is running]** **[Ignition switch: OFF]** • For a few seconds after turning ignition switch OFF	0 - 1.5V
			[Ignition switch: OFF] • More than a few seconds after turning ignition switch OFF	BATTERY VOLTAGE (11 - 14V)
119 120	R/G R/G	Power supply for ECM	**[Ignition switch: ON]**	BATTERY VOLTAGE (11 - 14V)

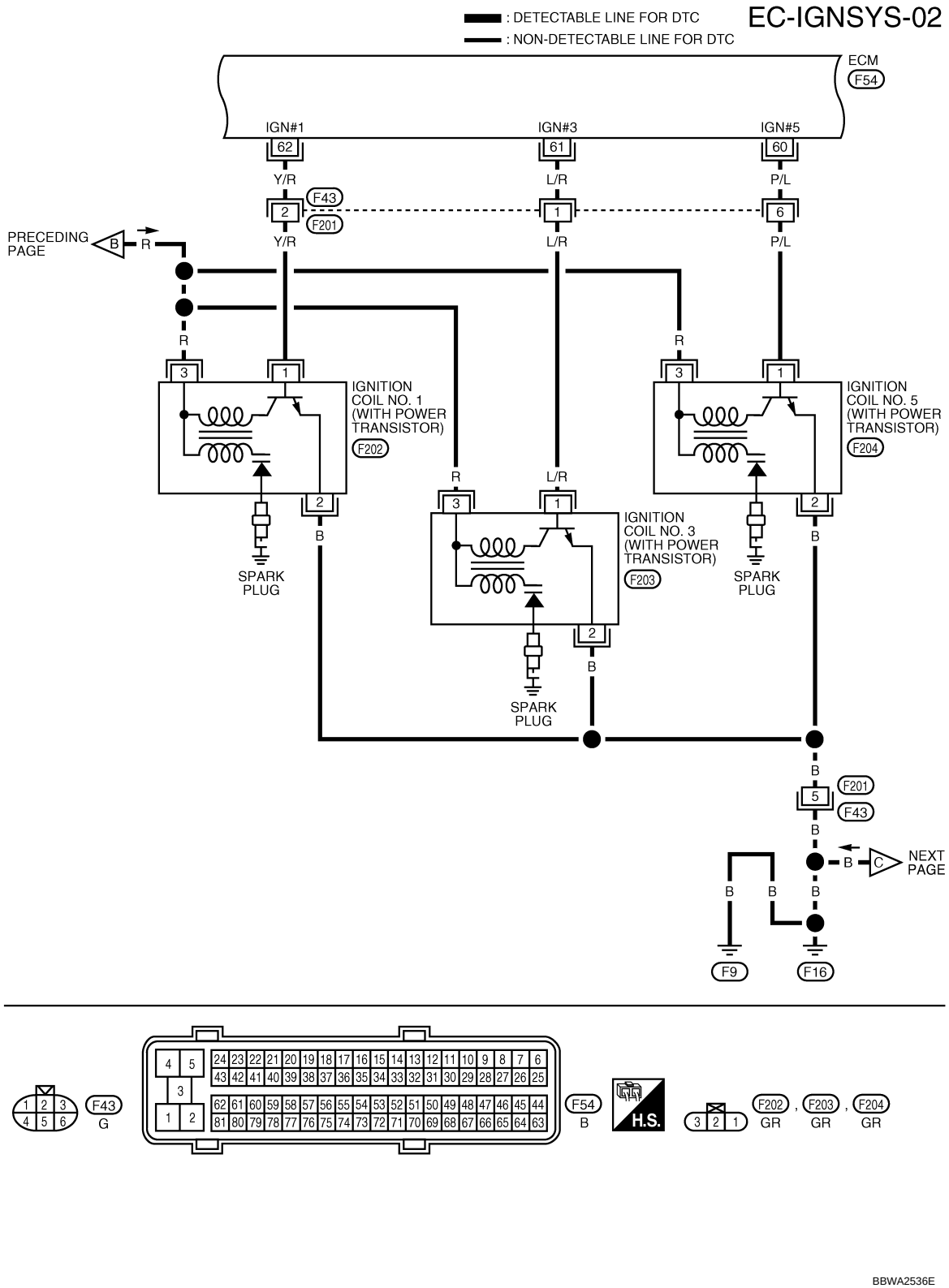

Specification data are reference values and are measured between each terminal and ground.
Pulse signal is measured by CONSULT-III.

CAUTION:

Do not use ECM ground terminals when measuring input/output voltage. Doing so may result in damage to the ECM's transistor. Use a ground other than ECM terminals, such as the ground.

TERMINAL NO.	WIRE COLOR	ITEM	CONDITION	DATA (DC Voltage)
60 61 62	P/L L/R Y/R	Ignition signal No. 5 Ignition signal No. 3 Ignition signal No. 1	**[Engine is running]** • **Warm-up condition** • Idle speed **NOTE:** The pulse cycle changes depending on rpm at idle	0 - 0.4V★ 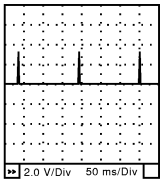 SEC986C
			[Engine is running] • **Warm-up condition** • Engine speed: 2,500 rpm	0.1 - 0.6V★ 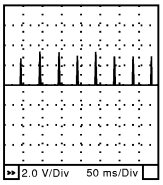 SEC987C

★: Average voltage for pulse signal (Actual pulse signal can be confirmed by oscilloscope.)

EC-IGNSYS-03

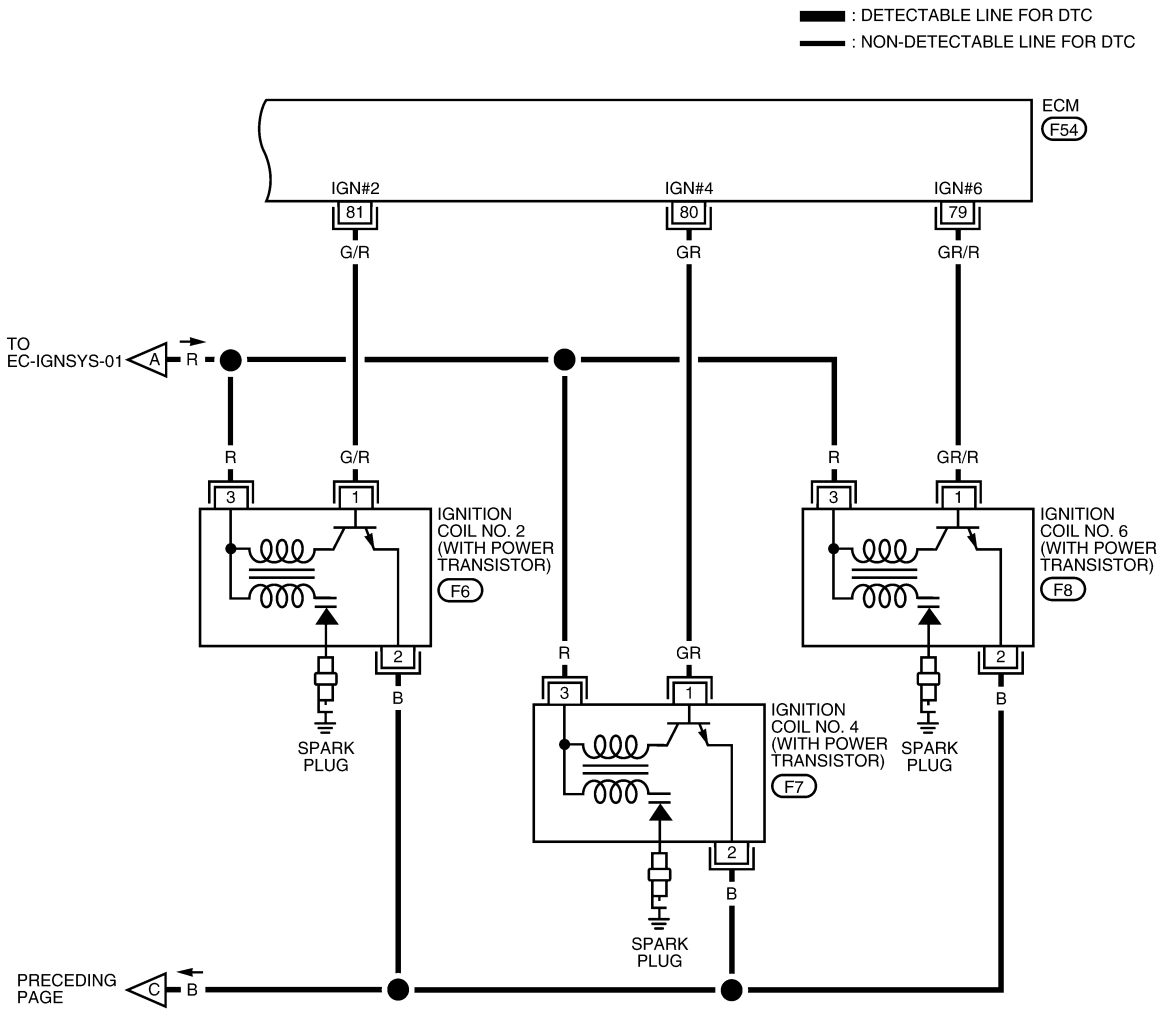

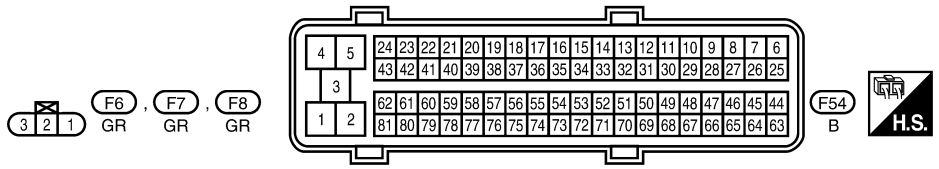

BBWA2537E

Specification data are reference values and are measured between each terminal and ground.
Pulse signal is measured by CONSULT-III.

CAUTION:

Do not use ECM ground terminals when measuring input/output voltage. Doing so may result in damage to the ECM's transistor. Use a ground other than ECM terminals, such as the ground.

TERMINAL NO.	WIRE COLOR	ITEM	CONDITION	DATA (DC Voltage)
79 80 81	GR/R GR G/R	Ignition signal No. 6 Ignition signal No. 4 Ignition signal No. 2	**[Engine is running]** • **Warm-up condition** • Idle speed **NOTE:** The pulse cycle changes depending on rpm at idle	0 - 0.4V★ 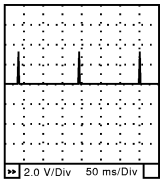 SEC986C
			[Engine is running] • **Warm-up condition** • Engine speed: 2,500 rpm	0.1 - 0.6V★ 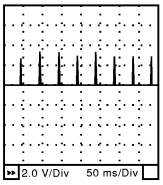 SEC987C

★: Average voltage for pulse signal (Actual pulse signal can be confirmed by oscilloscope.)

Diagnosis Procedure

INFOID:0000000001717735

1. CHECK ENGINE START

Turn ignition switch OFF, and restart engine.
Is engine running?

Yes or No

Yes (With CONSULT-III)>>GO TO 2.
Yes (Without CONSULT-III)>>GO TO 3.
No >> GO TO 4.

2. CHECK OVERALL FUNCTION

With CONSULT-III

1. Perform “POWER BALANCE” in “ACTIVE TEST” mode with CONSULT-III.
2. Make sure that each circuit produces a momentary engine speed drop.

OK or NG

OK >> **INSPECTION END**
NG >> GO TO 10.

3. CHECK OVERALL FUNCTION

Without CONSULT-III

1. Let engine idle.
2. Read the voltage signal between ECM terminals 60, 61, 62, 79, 80, 81 and ground with an oscilloscope.
3. Verify that the oscilloscope screen shows the signal wave as shown below.
   NOTE:
   The pulse cycle changes depending on rpm at idle.

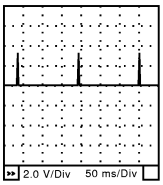

SEC986C

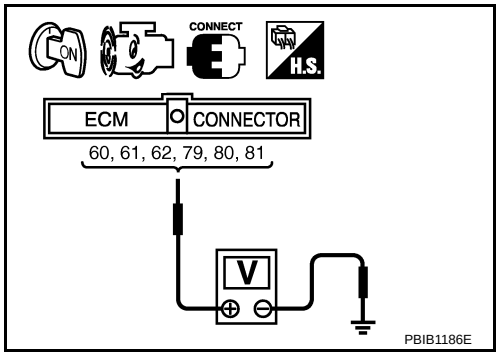

PBIB1186E

OK or NG

OK >> **INSPECTION END**
NG >> GO TO 10.

4. CHECK IGNITION COIL POWER SUPPLY CIRCUIT-I

1. Turn ignition switch OFF, wait at least 10 seconds and then turn ON.
2. Check voltage between ECM terminals 119, 120 and ground with CONSULT-III or tester.

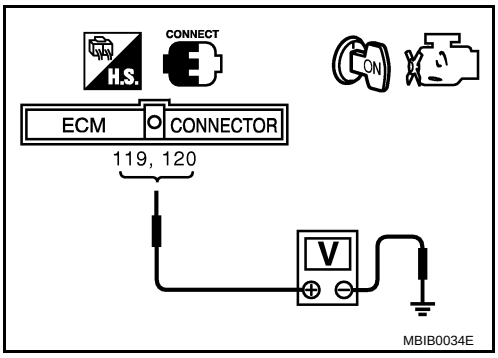

Voltage: Battery voltage

OK or NG

OK >> GO TO 5.
NG >> Go to EC-131.

5. CHECK IGNITION COIL POWER SUPPLY CIRCUIT-II

1. Turn ignition switch OFF.
2. Disconnect condenser-1 harness connector.
3. Turn ignition switch ON.

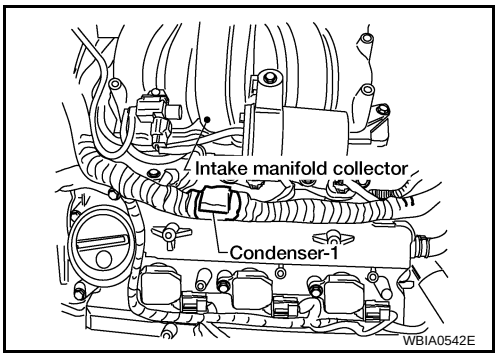

4. Check voltage between condenser-1 terminal + and ground with CONSULT-III or tester.

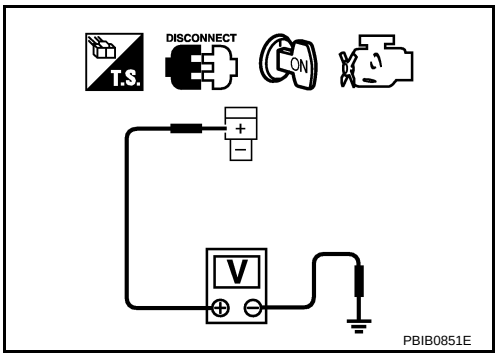

Voltage: Battery voltage

OK or NG

OK >> GO TO 8.
NG >> GO TO 6.

6. CHECK IGNITION COIL POWER SUPPLY CIRCUIT-III

1. Turn ignition switch OFF.
2. Disconnect IPDM E/R harness connector E122.
3. Check harness continuity between IPDM E/R terminal 17 and condenser-1 terminal +. Refer to Wiring Diagram.

Continuity should exist.

4. Also check harness for short to ground and short to power.

OK or NG

OK >> Go to EC-131.
NG >> GO TO 7.

7. DETECT MALFUNCTIONING PART

Check the following.
- Harness connectors E5, F14

- Harness for open or short between IPDM E/R and condenser-1

>> Repair open circuit or short to ground or short to power in harness or connectors.

8. CHECK CONDENSER-1 GROUND CIRCUIT FOR OPEN AND SHORT

1. Turn ignition switch OFF.
2. Check harness continuity between condenser-1 terminal – and ground.
   Refer to Wiring Diagram.

Continuity should exist.

3. Also check harness for short to power.

OK or NG

OK >> GO TO 9.
NG >> Repair open circuit or short to power in harness or connectors.

9. CHECK CONDENSER-1

Refer to EC-600, "Component Inspection".

OK or NG

OK >> GO TO 10.
NG >> Replace condenser-1.

10. CHECK IGNITION COIL POWER SUPPLY CIRCUIT-V

1. Turn ignition switch OFF.
2. Reconnect all harness connectors disconnected.
3. Disconnect ignition coil harness connector.

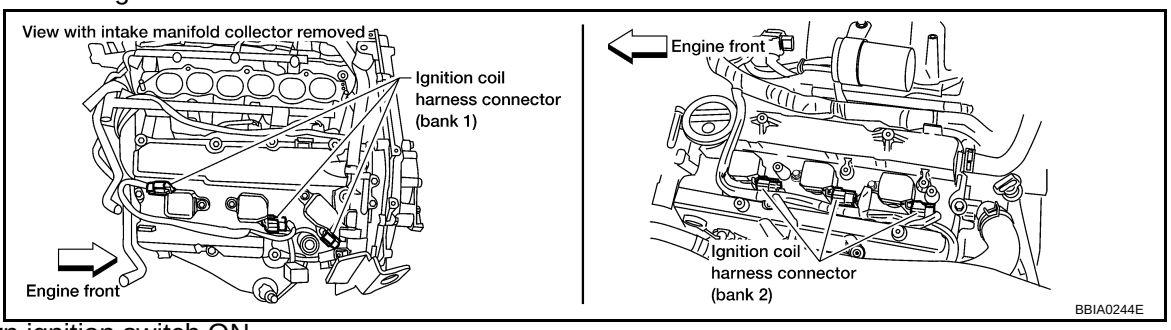

4. Turn ignition switch ON.
5. Check voltage between ignition coil terminal 3 and ground with CONSULT-III or tester.

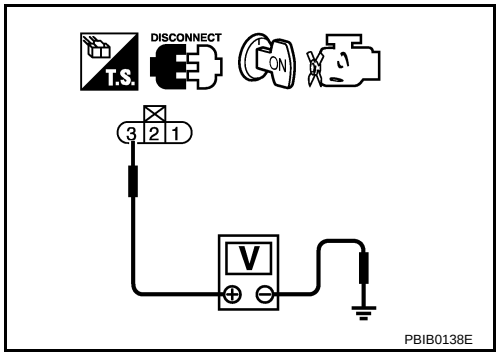

Voltage: Battery voltage

OK or NG

OK >> GO TO 12.
NG >> GO TO 11.

11. DETECT MALFUNCTIONING PART

Check the following.

- Harness connectors F43, F201
- Harness for open or short between ignition coil and harness connector F14

>> Repair or replace harness or connectors.

12. CHECK IGNITION COIL GROUND CIRCUIT FOR OPEN AND SHORT

1. Turn ignition switch OFF.
2. Check harness continuity between ignition coil terminal 2 and ground.

Refer to Wiring Diagram.

Continuity should exist.

3. Also check harness for short to power.

OK or NG

OK >> GO TO 14.
NG >> GO TO 13.

13. DETECT MALFUNCTIONING PART

Check the following.
- Harness connectors F201, F43
- Harness for open or short between ignition coil and ground

>> Repair open circuit or short to power in harness or connectors.

14. CHECK IGNITION COIL OUTPUT SIGNAL CIRCUIT FOR OPEN AND SHORT

1. Disconnect ECM harness connector.
2. Check harness continuity between ECM terminals 60, 61, 62, 79, 80, 81 and ignition coil terminal 1. Refer to Wiring Diagram.

Continuity should exist.

3. Also check harness for short to ground and short to power.

OK or NG

OK >> GO TO 16.
NG >> GO TO 15.

15. DETECT MALFUNCTIONING PART

Check the following.
- Harness connectors F43, F201
- Harness for open or short between ignition coil and ECM

>> Repair open circuit or short to ground or short to power in harness or connectors.

16. CHECK IGNITION COIL WITH POWER TRANSISTOR

Refer to EC-600, "Component Inspection".

OK or NG

OK >> GO TO 17.
NG >> Replace malfunctioning ignition coil with power transistor.

17. CHECK INTERMITTENT INCIDENT

Refer to EC-130.

>> **INSPECTION END**

Component Inspection

INFOID:0000000001717736

IGNITION COIL WITH POWER TRANSISTOR

CAUTION:

Do the following procedure in the place where ventilation is good without the combustible.

1. Turn ignition switch OFF.
2. Disconnect ignition coil harness connector.

3. Check resistance between ignition coil terminals as follows.

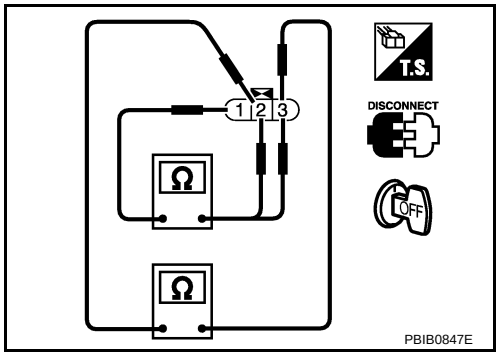

Terminal No. (Polarity)	Resistance Ω [at 25°C (77°F)]
1 and 2	Except 0 or ∞
1 and 3	Except 0
2 and 3	

4. If NG, Replace ignition coil with power transistor.
   If OK, go to next step.
5. Turn ignition switch OFF.
6. Reconnect all harness connectors disconnected.
7. Remove fuel pump fuse in IPDM E/R to release fuel pressure.
   NOTE:
   Do not use CONSULT-III to release fuel pressure, or fuel pressure applies again during the following procedure.
8. Start engine.
9. After engine stalls, crank it two or three times to release all fuel pressure.
10. Turn ignition switch OFF.
11. Remove ignition coil harness connectors to avoid the electrical discharge from the ignition coils.
12. Remove ignition coil and spark plug of the cylinder to be checked.

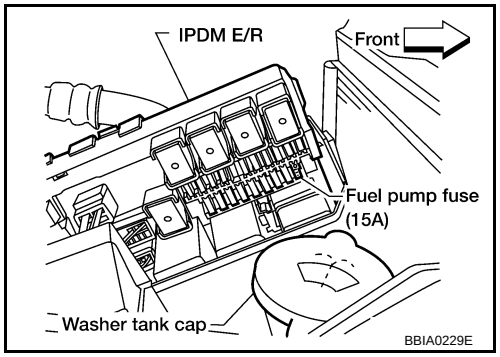

13. Crank engine for 5 seconds or more to remove combustion gas in the cylinder.
14. Connect spark plug and harness connector to ignition coil.
15. Fix ignition coil using a rope etc. with gap of 13 - 17 mm between the edge of the spark plug and grounded metal portion as shown in the figure.
16. Crank engine for about 3 seconds, and check whether spark is generated between the spark plug and the grounded part.

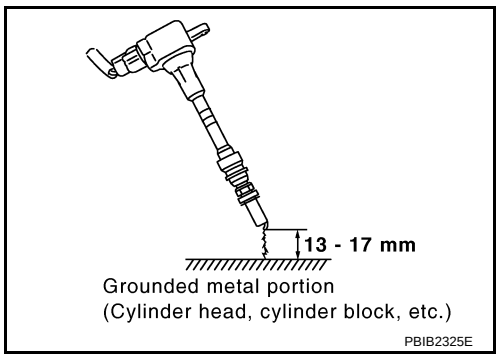

Spark should be generated.

CAUTION:
- **Do not approach to the spark plug and the ignition coil within 50cm. Be careful not to get an electrical shock while checking, because the electrical discharge voltage becomes 20kV or more.**
- **It might cause to damage the ignition coil if the gap of more than 17 mm is taken.**

NOTE:
When the gap is less than 13 mm, the spark might be generated even if the coil is malfunctioning.

17. If NG, Replace ignition coil with power transistor.

CONDENSER-1

1. Turn ignition switch OFF.
2. Disconnect condenser-1 harness connector.
3. Check resistance between condenser-1 terminals + and –.

Resistance: Above 1 MΩ [at 25°C (77°F)]

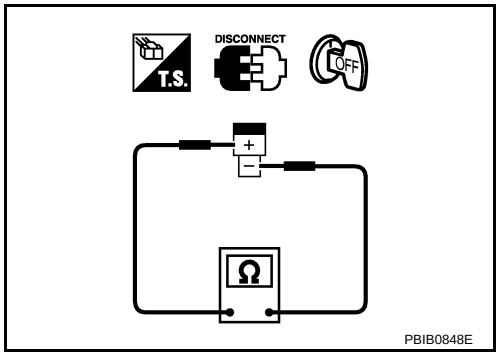

Removal and Installation

INFOID:0000000001717737

IGNITION COIL WITH POWER TRANSISTOR

Refer to EM-35.

REFRIGERANT PRESSURE SENSOR

Component Description

INFOID:0000000001717738

The refrigerant pressure sensor is installed in the RH side of the condenser of the air conditioner system. The sensor uses an electrostatic volume pressure transducer to convert refrigerant pressure to voltage. The voltage signal is sent to ECM, and ECM controls cooling fan system.

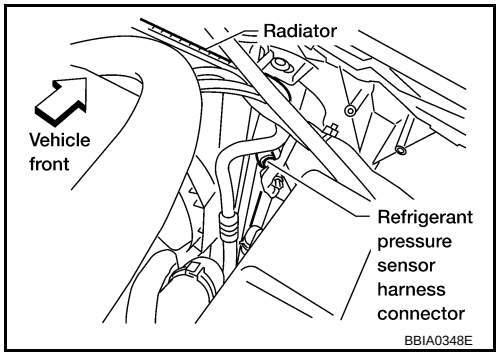

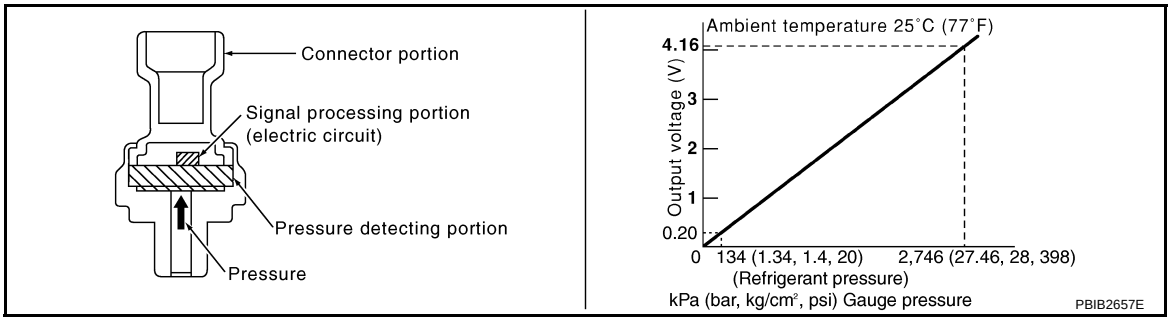

Wiring Diagram

INFOID:0000000001717739

EC-RP/SEN-01

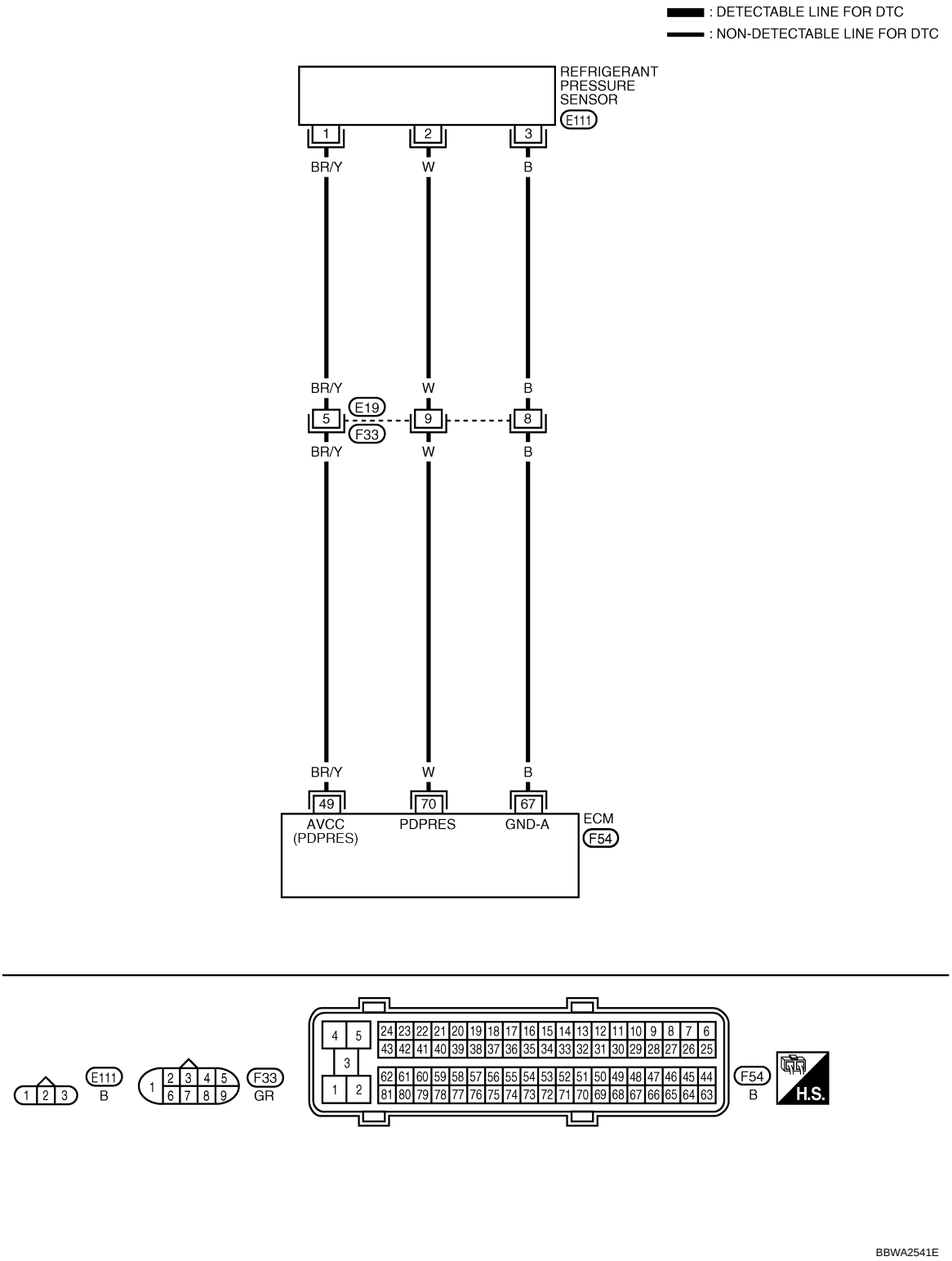

Specification data are reference values and are measured between each terminal and ground.

CAUTION:

Do not use ECM ground terminals when measuring input/output voltage. Doing so may result in damage to the ECM's transistor. Use a ground other than ECM terminals, such as the ground.

TER-MI-NAL NO.	WIRE COLOR	ITEM	CONDITION	DATA (DC Voltage)
49	BR/Y	Refrigerant pressure sensor power supply	**[Ignition switch: ON]**	Approximately 5V
67	B	Sensor ground	**[Engine is running]** • **Warm-up condition** • Idle speed	Approximately 0V
70	W	Refrigerant pressure sensor	**[Engine is running]** • **Warm-up condition** • Both A/C switch and blower fan switch: ON (Compressor operates.)	1.0 - 4.0V

Diagnosis Procedure

INFOID:0000000001717740

1. CHECK REFRIGERANT PRESSURE SENSOR OVERALL FUNCTION

1. Start engine and warm it up to normal operating temperature.
2. Turn A/C switch and blower fan switch ON.
3. Check voltage between ECM terminal 70 and ground with CONSULT-III or tester.

Voltage: 1.0 - 4.0V

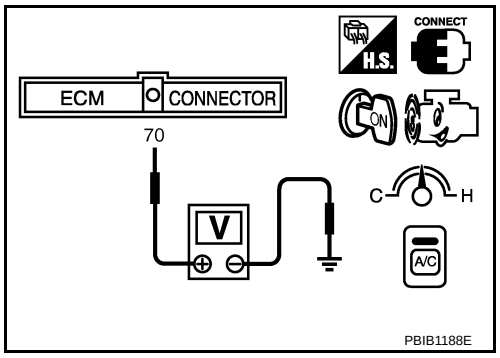

OK or NG

OK >> **INSPECTION END**
NG >> GO TO 2.

2. CHECK GROUND CONNECTIONS

1. Stop engine.
2. Turn A/C switch and blower fan switch OFF
3. Loosen and retighten three ground screws on the body. Refer to EC-138, "Ground Inspection".

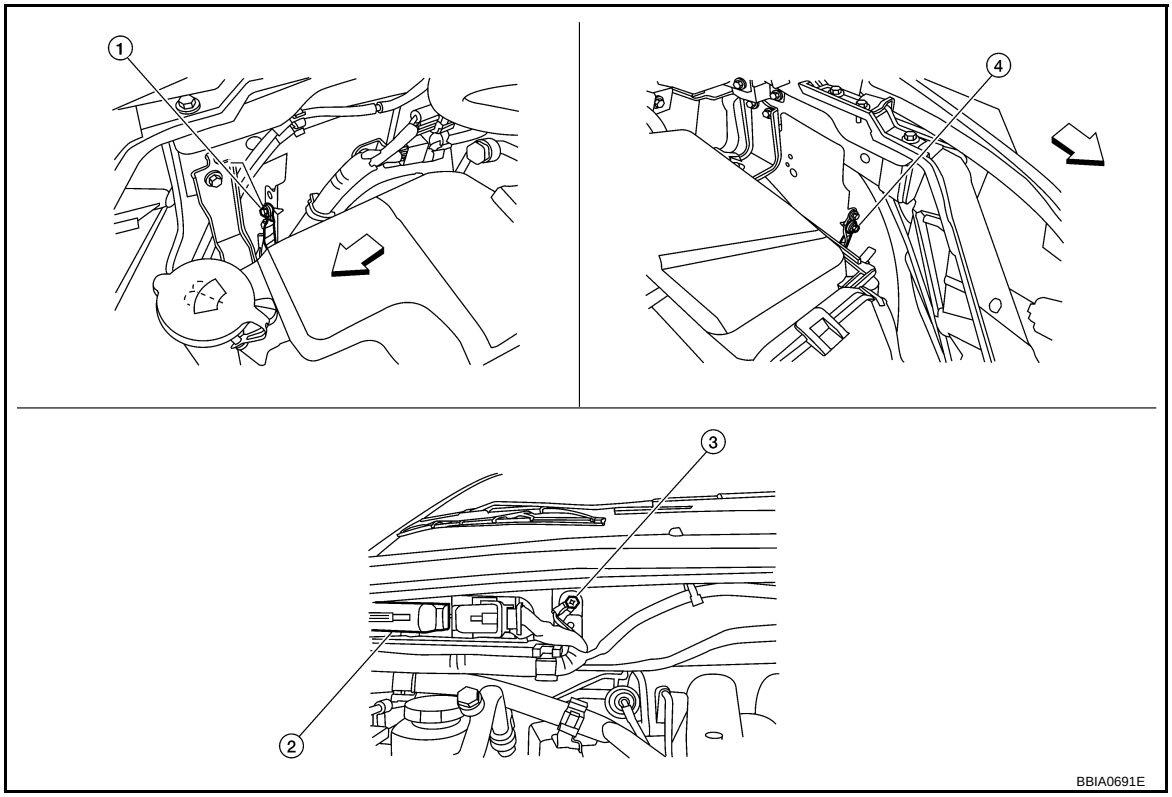

⇦: Vehicle front

1. Body ground E24
2. ECM
3. Body ground E9
4. Body ground E15

OK or NG

OK >> GO TO 3.
NG >> Repair or replace ground connections.

3. CHECK REFRIGERANT PRESSURE SENSOR POWER SUPPLY CIRCUIT

1. Disconnect refrigerant pressure sensor harness connector.
2. Turn ignition switch ON.

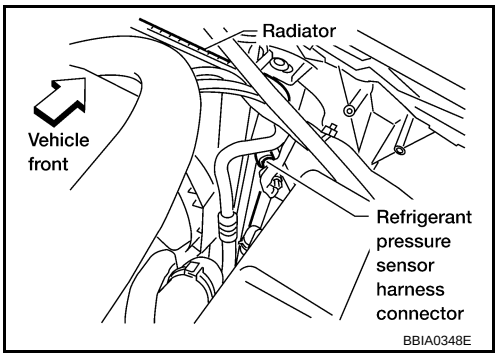

3. Check voltage between refrigerant pressure sensor terminal 1 and ground with CONSULT-III or tester.

Voltage: Approximately 5V

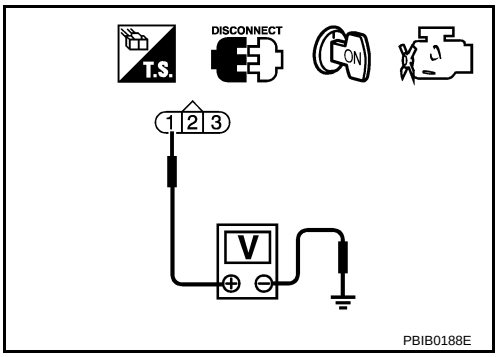

OK or NG

OK >> GO TO 5.
NG >> GO TO 4.

4. DETECT MALFUNCTIONING PART

Check the following.
- Harness connectors E19, F33
- Harness for open or short between ECM and refrigerant pressure sensor

>> Repair harness or connectors.

5. CHECK REFRIGERANT PRESSURE SENSOR GROUND CIRCUIT FOR OPEN AND SHORT

1. Turn ignition switch OFF.
2. Disconnect ECM harness connector.
3. Check harness continuity between refrigerant pressure sensor terminal 3 and ECM terminal 67. Refer to Wiring Diagram.

Continuity should exist.

4. Also check harness for short to ground and short to power.

OK or NG

OK >> GO TO 7.
NG >> GO TO 6.

6. DETECT MALFUNCTIONING PART

Check the following.
- Harness connectors E19, F33
- Harness for open or short between ECM and refrigerant pressure sensor

>> Repair open circuit or short to ground or short to power in harness or connectors.

7. CHECK REFRIGERANT PRESSURE SENSOR INPUT SIGNAL CIRCUIT FOR OPEN AND SHORT

1. Check harness continuity between ECM terminal 70 and refrigerant pressure sensor terminal 2. Refer to Wiring Diagram.

Continuity should exist.

2. Also check harness for short to ground and short to power.

OK or NG

OK >> GO TO 9.
NG >> GO TO 8.

8. DETECT MALFUNCTIONING PART

Check the following.
- Harness connectors E19, F33
- Harness for open or short between ECM and refrigerant pressure sensor

>> Repair open circuit or short to ground or short to power in harness or connectors.

9. CHECK INTERMITTENT INCIDENT

Refer to EC-130.

OK or NG

OK >> Replace refrigerant pressure sensor.
NG >> Repair or replace.

Removal and Installation

INFOID:0000000001717741

REFRIGERANT PRESSURE SENSOR

Refer to ATC-173, "Removal and Installation for Refrigerant Pressure Sensor" or MTC-155, "Removal and Installation for Refrigerant Pressure Sensor".

VIAS

Description

INFOID:0000000001717742

SYSTEM DESCRIPTION

Sensor	Input Signal to ECM	ECM function	Actuator
Crankshaft position sensor (POS) Camshaft position sensor (PHASE)	Engine speed*	VIAS control	VIAS control solenoid valve
Mass air flow sensor	Amount of intake air		
Engine coolant temperature sensor	Engine coolant temperature		
Throttle position sensor	Throttle position		
Accelerator pedal position sensor	Accelerator pedal position		
Battery	Battery voltage*		

*: ECM determines the start signal status by the signals of engine speed and battery voltage.

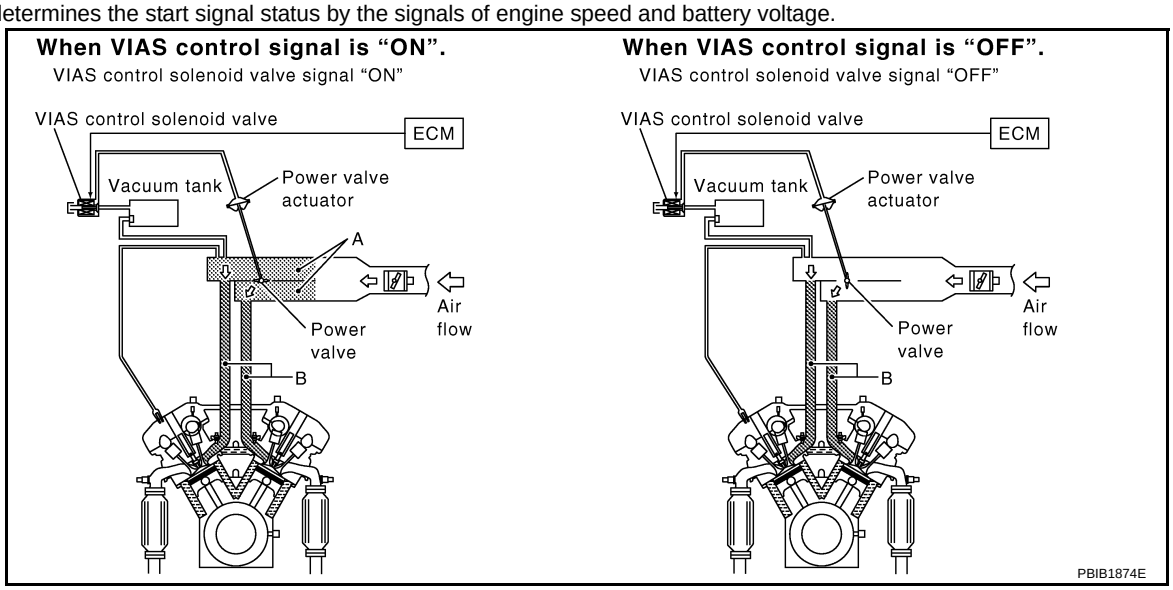

When the engine is running at low or medium speed, the power valve is fully closed. Under this condition, the effective suction port length is equivalent to the total length of the intake manifold collector's suction port including the intake valve. This long suction port provides increased air intake which results in improved suction efficiency and higher torque generation.

The surge tank and one-way valve are provided. When engine is running at high speed, the ECM sends the signal to the VIAS control solenoid valve. This signal introduces the intake manifold vacuum into the power valve actuator and therefore opens the power valve to two suction passages together in the collector.

Under this condition, the effective port length is equivalent to the length of the suction port provided independently for each cylinder. This shortened port length results in enhanced engine output with reduced suction resistance under high speeds.

COMPONENT DESCRIPTION

Power Valve

The power valve is installed in intake manifold collector and used to control the suction passage of the variable induction air control system. It is set in the fully closed or fully opened position by the power valve actuator (1) operated by the vacuum stored in the surge tank. The vacuum in the surge tank is controlled by the VIAS control solenoid valve (2).

- ⇦: Vehicle front

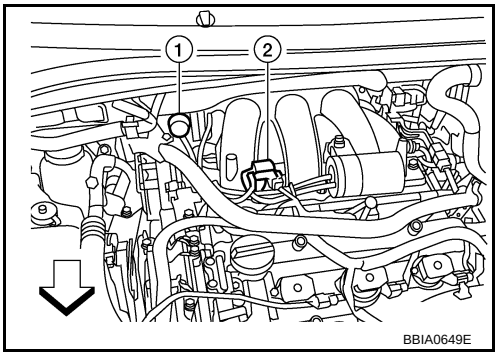

VIAS Control Solenoid Valve

The VIAS control solenoid valve (2) cuts the intake manifold vacuum signal for power valve control. It responds to ON/OFF signals from the ECM. When the solenoid is off, the vacuum signal from the intake manifold is cut. When the ECM sends an ON signal the coil pulls the plunger downward and feeds the vacuum signal to the power valve actuator (1).

- ⇦: Vehicle front

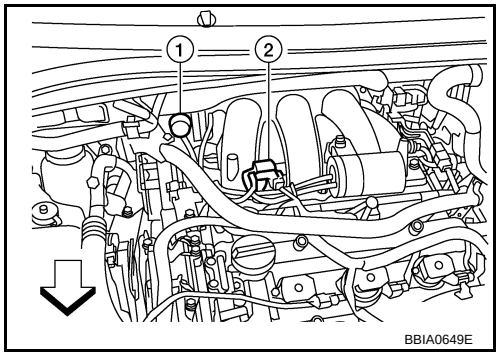

CONSULT-III Reference Value in Data Monitor Mode

INFOID:0000000001717743

Specification data are reference values.

MONITOR ITEM	CONDITION		SPECIFICATION
VIAS S/V-1	• Engine: After warming up	1,800 - 3,600 rpm	ON
		Except above conditions	OFF

Wiring Diagram

INFOID:0000000001717744

EC-VIAS-01

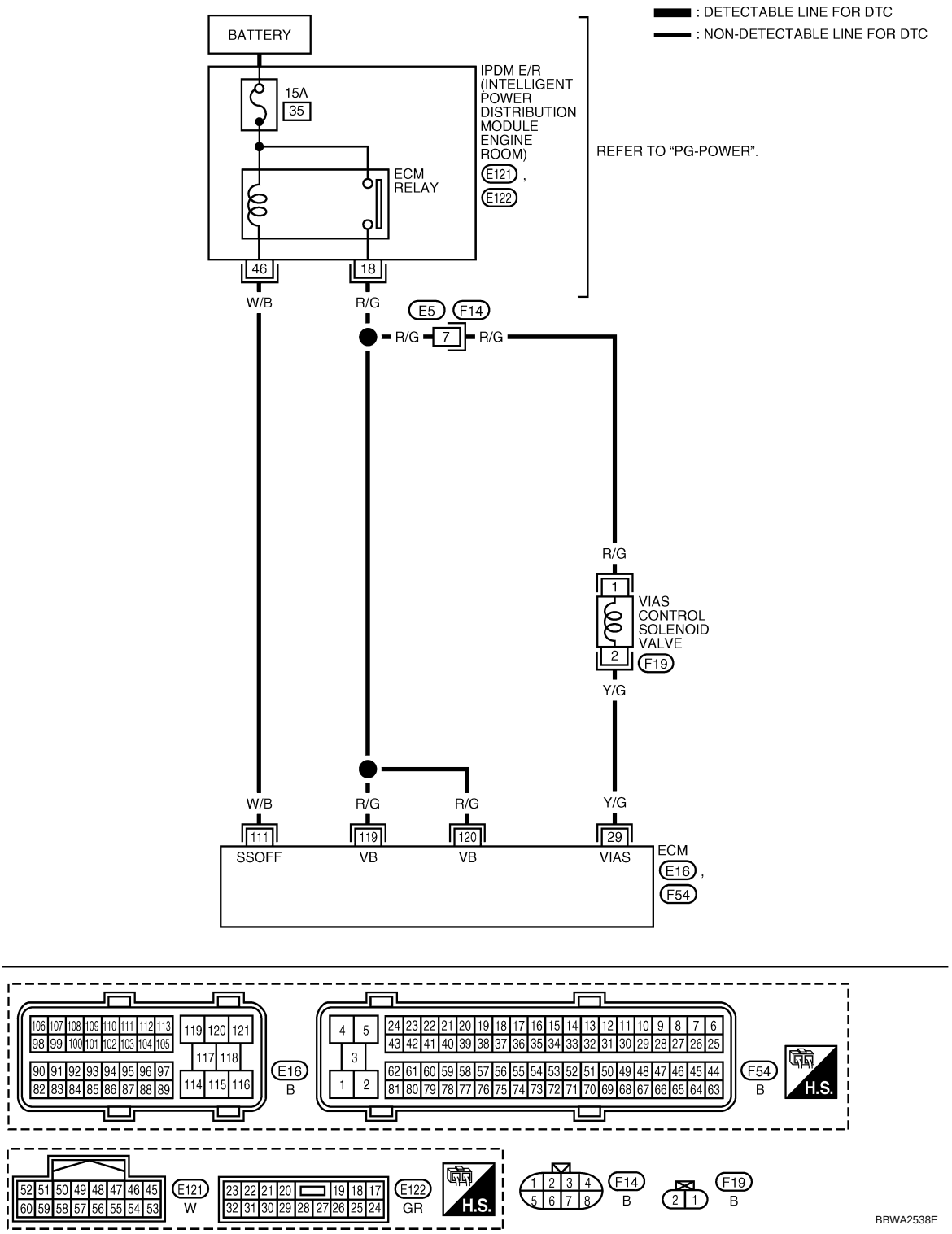

Specification data are reference values and are measured between each terminal and ground.

CAUTION:

Do not use ECM ground terminals when measuring input/output voltage. Doing so may result in damage to the ECM's transistor. Use a ground other than ECM terminals, such as the ground.

TERMINAL NO.	WIRE COLOR	ITEM	CONDITION	DATA (DC Voltage)
29	Y/G	VIAS control solenoid valve	**[Engine is running]** • Idle speed	BATTERY VOLTAGE (11 - 14V)
			[Engine is running] • Engine speed: Between 1,800 and 3,600 rpm	0 - 1.0V
111	W/B	ECM relay (Self shut-off)	**[Engine is running]** **[Ignition switch: OFF]** • For a few seconds after turning ignition switch OFF	0 - 1.5V
			[Ignition switch: OFF] • More than a few seconds passed after turning ignition switch OFF	BATTERY VOLTAGE (11 - 14V)
119 120	R/G R/G	Power supply for ECM	**[Ignition switch: ON]**	BATTERY VOLTAGE (11 - 14V)

Diagnosis Procedure

INFOID:0000000001717745

1. CHECK OVERALL FUNCTION

With CONSULT-III

1. Start engine and warm it up to normal operating temperature.
2. Perform “VIAS S/V-1” in “ACTIVE TEST” mode with CONSULT-III.
3. Turn VIAS control solenoid valve ON and OFF, and make sure that power valve actuator rod moves as shown in the figure.
   NOTE:
   Use an inspection mirror (A) to confirm the operation of power valve actuator rod.

   ⇦ : Vehicle front

   1. Power valve actuator

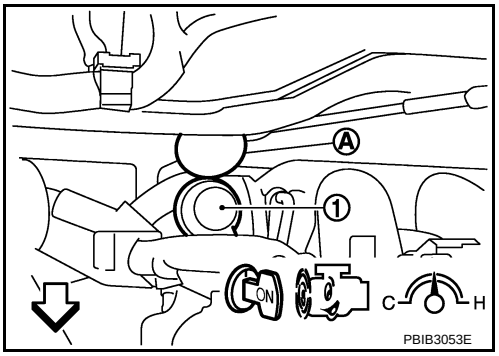

Without CONSULT-III

1. Start engine and warm it up to normal operating temperature.
2. Rev engine up to between 1,800 and 3,600 rpm and make sure that power valve actuator rod moves as shown in the figure.
   NOTE:
   Use an inspection mirror (A) to confirm the operation of power valve actuator rod.

- ⇦: Vehicle front
- Power valve actuator (1)

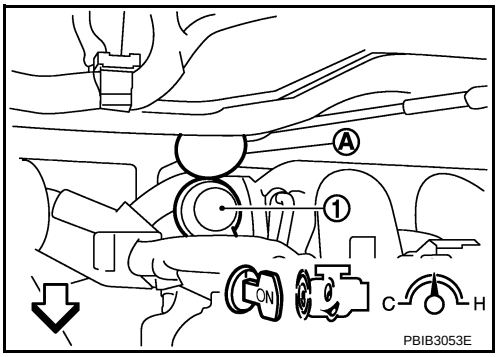

OK or NG

OK >> **INSPECTION END**
NG (With CONSULT-III) >>GO TO 2.
NG (Without CONSULT-III) >>GO TO 3.

2. CHECK VACUUM EXISTENCE

With CONSULT-III

1. Stop engine and disconnect vacuum hose connected to power valve actuator.

2. Install the vacuum gauge as shown in the figure.
3. Start engine and let it idle.
4. Perform “VIAS S/V-1” in “ACTIVE TEST” mode with CONSULT-III.
5. Turn VIAS control solenoid valve ON and OFF, and check vacuum existence under the following conditions.

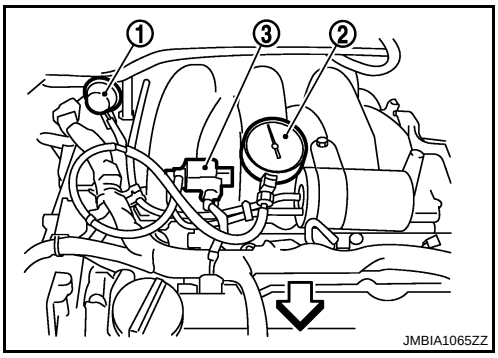

⇦ : Vehicle front

1. Power valve actuator
2. Vacuum gauge
3. VIAS control solenoid valve

VIAS S/V-1	Vacuum
ON	Should exist
OFF	Should not exist

OK or NG

OK >> Repair or replace power valve actuator.
NG >> GO TO 4.

3. CHECK VACUUM EXISTENCE

Without CONSULT-III

1. Stop engine and disconnect vacuum hose connected to power valve actuator.
2. Install the vacuum gauge as shown in the figure.
3. Disconnect VIAS control solenoid valve harness connector.
4. Start engine and let it idle.
5. Apply 12V of direct current between VIAS control solenoid valve terminals 1 and 2.

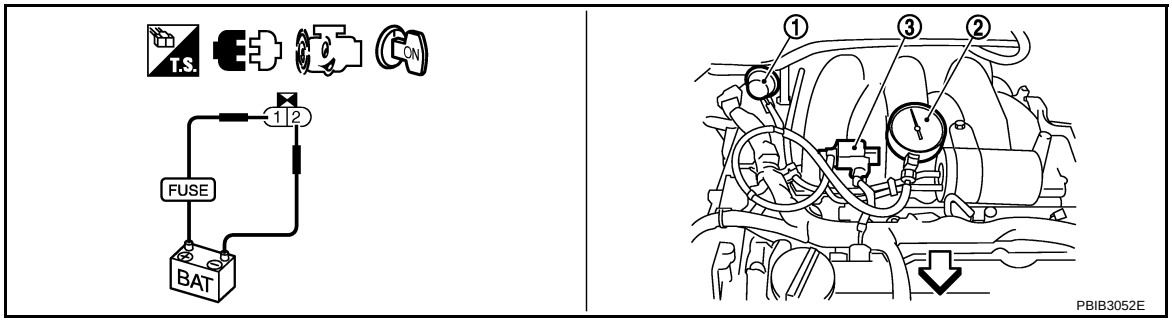

⇦: Vehicle front

1. Power valve actuator
2. Vacuum gauge
3. VIAS control solenoid valve

6. Check vacuum existence under the following conditions.

Condition	Vacuum
12V direct current supply	Should exist
No supply	Should not exist

OK or NG

OK >> Repair or replace power valve actuator.
NG >> GO TO 4.

4. CHECK VACUUM HOSE

1. Stop engine.

2. Check hoses and tubes between intake manifold and power valve actuator for crack, clogging, improper connection or disconnection. Refer to EC-96, "Vacuum Hose Drawing".

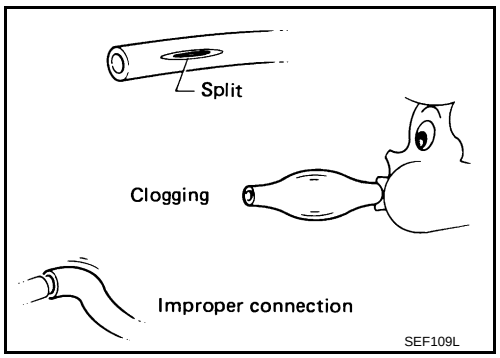

OK or NG

OK >> GO TO 5.
NG >> Repair hoses or tubes.

5. CHECK VACUUM TANK

Refer to EC-614, "Component Inspection".

OK or NG

OK >> GO TO 6.
NG >> Replace vacuum tank.

6. CHECK VIAS CONTROL SOLENOID VALVE POWER SUPPLY CIRCUIT

1. Turn ignition switch OFF.
2. Disconnect VIAS control solenoid valve (2) harness connector.
3. Turn ignition switch ON.

- ⇦: Vehicle front
- Power valve actuator (1)

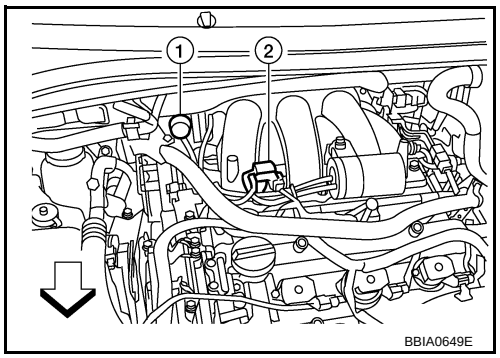

4. Check voltage between VIAS control solenoid valve terminal 1 and ground with CONSULT-III or tester.

Voltage: Battery voltage

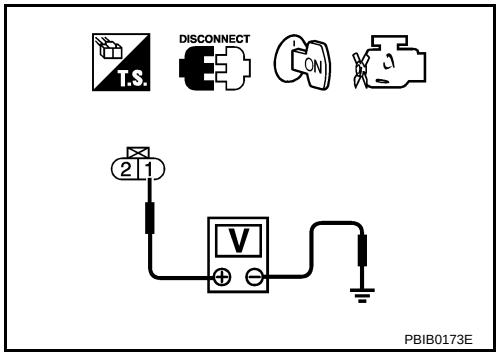

OK or NG

OK >> GO TO 8.
NG >> GO TO 7.

7. DETECT MALFUNCTIONING PART

Check the following.

- Harness connectors E5, F14
- Harness for open or short between VIAS control solenoid valve and IPDM E/R
- Harness for open or short between VIAS control solenoid valve and ECM

>> Repair harness or connectors.

8. CHECK VIAS CONTROL SOLENOID VALVE OUTPUT SIGNAL CIRCUIT FOR OPEN AND SHORT

1. Turn ignition switch OFF.
2. Disconnect ECM harness connector.
3. Check harness continuity between ECM terminal 29 and VIAS control solenoid valve terminal 2. Refer to Wiring Diagram.

Continuity should exist.

4. Also check harness for short to ground and short to power.

OK or NG

OK >> GO TO 9.
NG >> Repair open circuit or short to ground or short to power in harness or connectors.

9. CHECK VIAS CONTROL SOLENOID VALVE

Refer to EC-614, "Component Inspection".

OK or NG

OK >> GO TO 10.
NG >> Replace VIAS control solenoid valve.

10. CHECK INTERMITTENT INCIDENT

Refer to EC-130.

>> **INSPECTION END**

Component Inspection

INFOID:0000000001717746

VIAS CONTROL SOLENOID VALVE

With CONSULT-III

1. Reconnect harness connectors disconnected.
2. Turn ignition switch ON.
3. Perform “VIAS S/V-1” in “ACTIVE TEST” mode.
4. Check air passage continuity and operation delay time under the following conditions.

Condition VIAS S/V-1	Air passage continuity between A and B	Air passage continuity between A and C
ON	Yes	No
OFF	No	Yes

Operation takes less than 1 second.

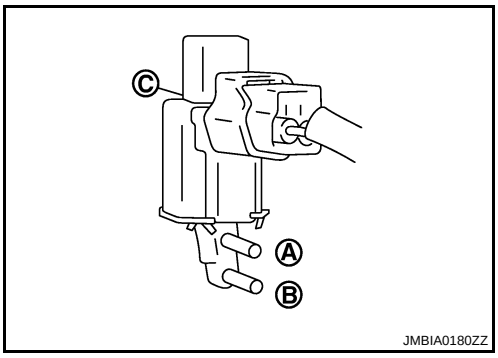

Without CONSULT-III

Check air passage continuity and operation delay time under the following conditions.

Condition	Air passage continuity between A and B	Air passage continuity between A and C
12V direct current supply between terminals 1 and 2	Yes	No
No supply	No	Yes

Operation takes less than 1 second.

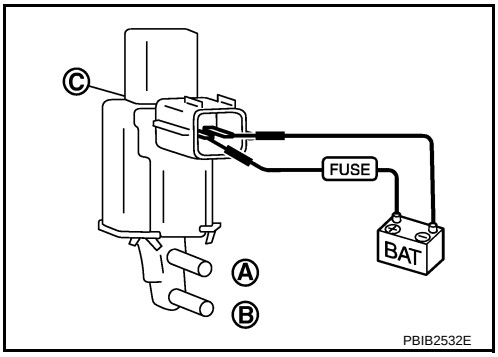

VACUUM TANK

1. Disconnect vacuum hose connected to vacuum tank.
2. Connect a vacuum pump to the center port of vacuum tank.
3. Apply vacuum and make sure that vacuum exists at the other port.

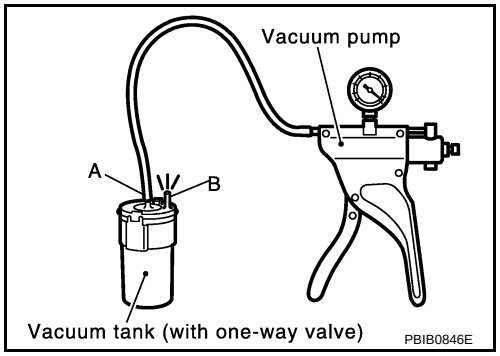

Removal and Installation

INFOID:0000000001717747

VIAS CONTROL SOLENOID VALVE

Refer to EM-23.

MIL AND DATA LINK CONNECTOR

Wiring Diagram

INFOID:0000000001717748

EC-MIL/DL-01

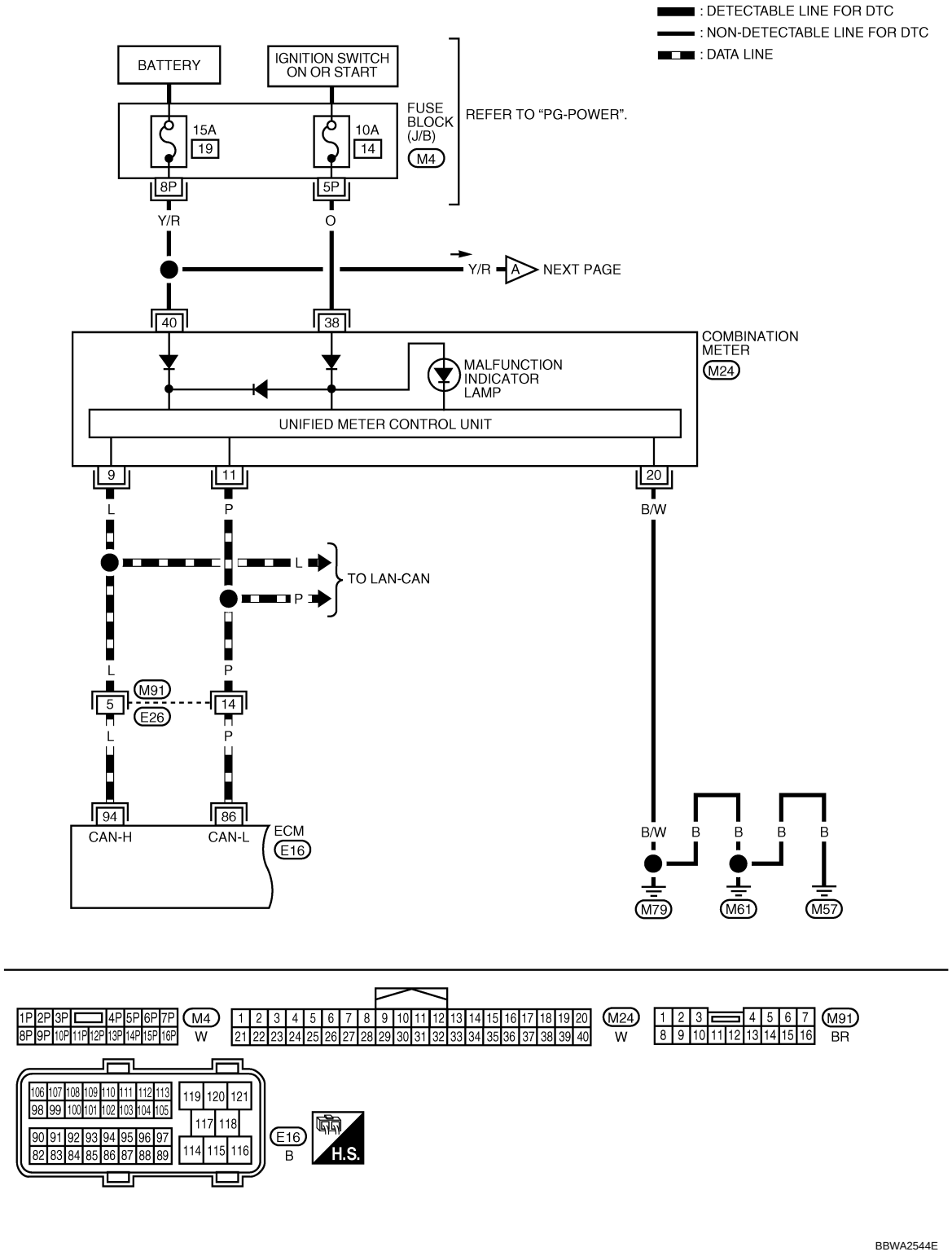

EC-MIL/DL-02

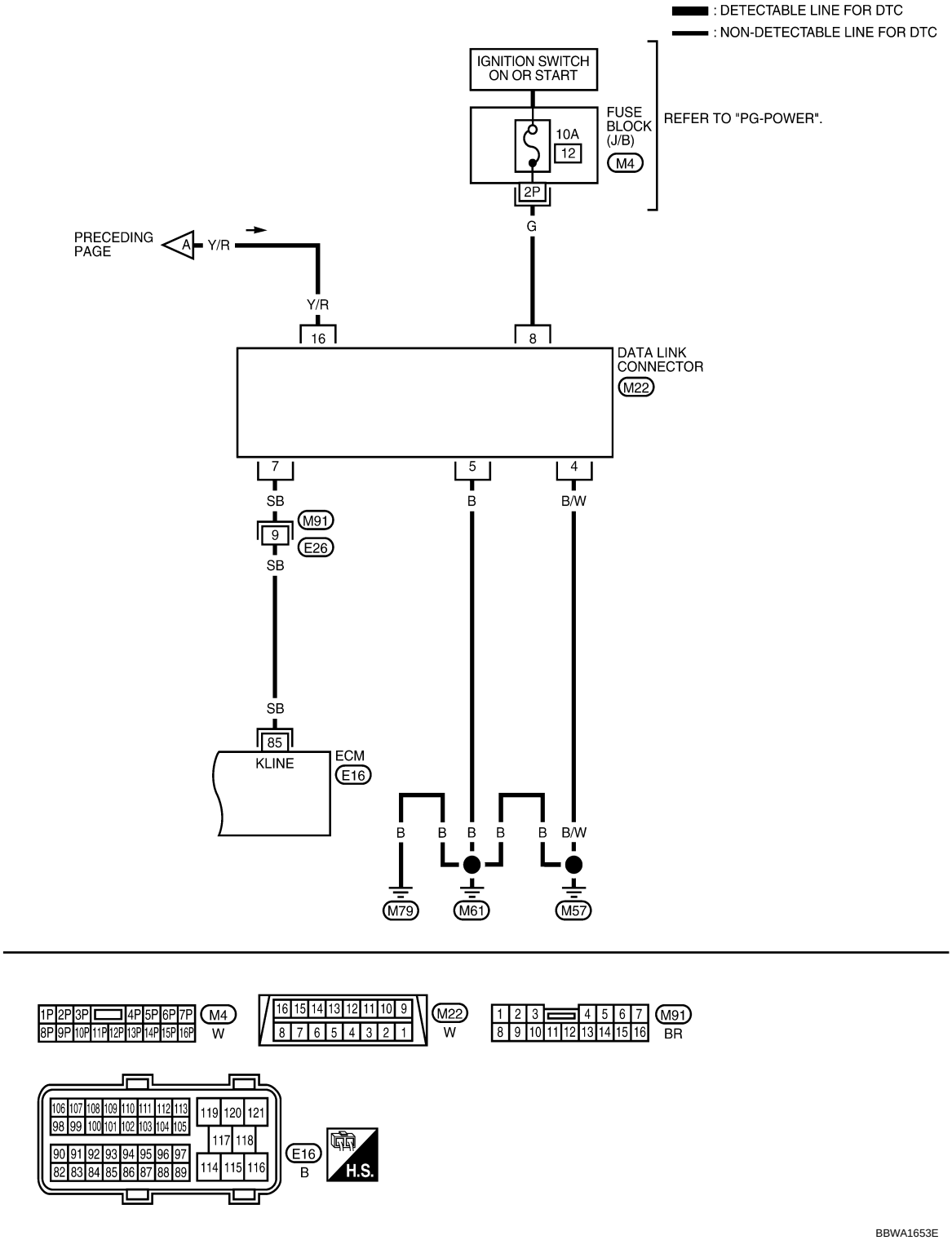
: DETECTABLE LINE FOR DTC
: NON-DETECTABLE LINE FOR DTC
IGNITION SWITCH ON OR START
FUSE BLOCK (J/B)
M4
10A
12
2P
REFER TO "PG-POWER".
G
PRECEDING PAGE
A
Y/R
Y/R
16
8
DATA LINK CONNECTOR
M22
7
5
4
SB
B
B/W
M91
9
E26
SB
SB
85
KLINE
ECM
E16
B
B
B
B
B
B/W
M79
M61
M57
M4
W
M22
W
M91
BR
E16
B
H.S.
BBWA1653E

SERVICE DATA AND SPECIFICATIONS (SDS)

Fuel Pressure

INFOID:0000000001717749

Fuel pressure at idling kPa (kg/cm^2, psi)	Approximately 350 (3.57, 51)

Idle Speed and Ignition Timing

INFOID:0000000001717750

Target idle speed	No load* (in P or N position)	675 ± 50 rpm
Air conditioner: ON	In P or N position	825 rpm or more
Ignition timing	In P or N position	15 ± 5° BTDC

*: Under the following conditions:

- Air conditioner switch: OFF
- Electric load: OFF (Lights, heater fan & rear window defogger)
- Steering wheel: Kept in straight-ahead position

Calculated Load Value

INFOID:0000000001717751

Conditions	Calculated load value % (Using CONSULT-III or GST)
At idle	5 - 35
At 2,500 rpm	5 - 35

Mass Air Flow Sensor

INFOID:0000000001717752

Supply voltage	Battery voltage (11 - 14V)
Output voltage at idle	1.0 - 1.3*V
Mass air flow (Using CONSULT-III or GST)	2.0 - 6.0 g·m/sec at idle* 7.0 - 20.0 g·m/sec at 2,500 rpm*

*: Engine is warmed up to normal operating temperature and running under no load.

Intake Air Temperature Sensor

INFOID:0000000001717753

Temperature °C (°F)	Resistance kΩ
25 (77)	1.800 - 2.200
80 (176)	0.283 - 0.359

Engine Coolant Temperature Sensor

INFOID:0000000001717754

Temperature °C (°F)	Resistance kΩ
20 (68)	2.1 - 2.9
50 (122)	0.68 - 1.00
90 (194)	0.236 - 0.260

EGR Temperature Sensor

INFOID:0000000001717755

Temperature °C (°F)	Resistance kΩ
0 (32)	0.73 - 0.88

Temperature °C (°F)	Resistance kΩ
50 (122)	0.074 - 0.082
100 (212)	0.011 - 0.014

Air Fuel Ratio (A/F) Sensor 1 Heater

INFOID:0000000001717756

Resistance [at 25°C (77°F)]	2.3 - 4.3Ω

Heated Oxygen sensor 2 Heater

INFOID:0000000001717757

Resistance [at 25°C (77°F)]	5.0 - 7.0Ω

Crankshaft Position Sensor (POS)

INFOID:0000000001717758

Refer to EC-324, "Component Inspection".

Camshaft Position Sensor (PHASE)

INFOID:0000000001717759

Refer to EC-332, "Component Inspection".

Throttle Control Motor

INFOID:0000000001717760

Resistance [at 25°C (77°F)]	Approximately 1 - 15Ω

Fuel Injector

INFOID:0000000001717761

Resistance [at 10 - 60°C (50 - 140°F)]	11.1 - 14.5Ω

Fuel Pump

INFOID:0000000001717762

Resistance [at 25°C (77°F)]	Approximately 0.2 - 5.0Ω