SECTION MWI

METER, WARNING LAMP & INDICATOR

CONTENTS

BASIC INSPECTION

DIAGNOSIS AND REPAIR WORKFLOW

Work flow

INFOID:0000000004504231

OVERALL SEQUENCE

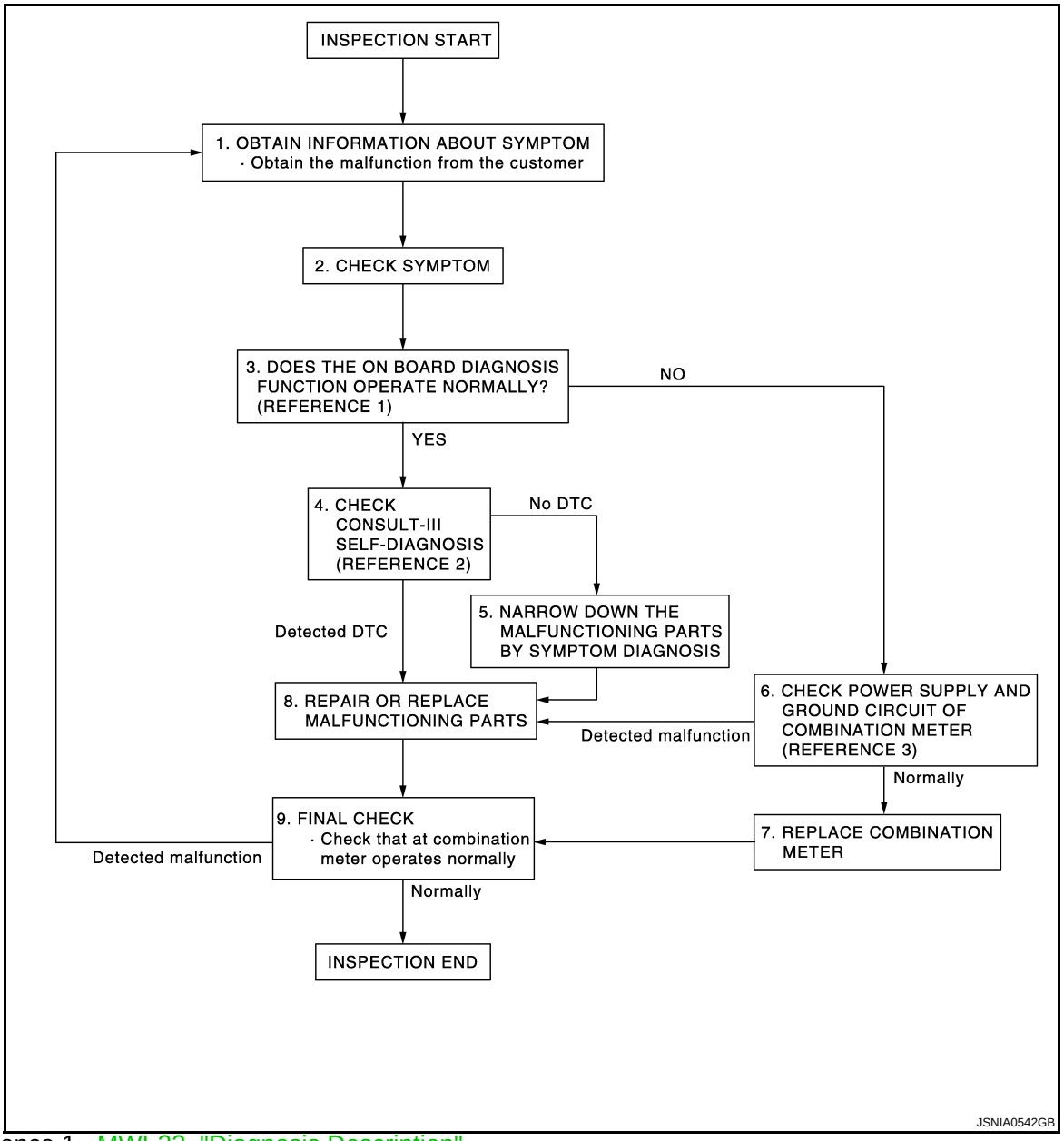

- Reference 1···MWI-32, "Diagnosis Description".
- Reference 2···MWI-68, "DTC Index".
- Reference 3···MWI-41, "COMBINATION METER : Diagnosis Procedure".

DETAILED FLOW

1.OBTAIN INFORMATION ABOUT SYMPTOM

Interview the customer to obtain as much information as possible about the conditions and environment under which the malfunction occurred.

>> GO TO 2.

2.CHECK SYMPTOM

- Check the symptom based on the information obtained from the customer.
- Check that any other malfunctions are present.

>> GO TO 3.

3. CHECK ON BOARD DIAGNOSIS OPERATION

Check that the on board diagnosis function operates. Refer to MWI-32, "Diagnosis Description".

Does the on board diagnosis function operate normally?

YES >> GO TO 4.
NO >> GO TO 6.

4. CHECK CONSULT-III SELF-DIAGNOSIS RESULTS

Connect CONSULT-III and perform “Self Diagnostic Result” of “METER/M&A”. Refer to MWI-33, "CONSULT-III Function (METER/M&A)".

Are self-diagnosis results normal?

YES >> GO TO 5.
NO >> GO TO 8.

5. NARROW DOWN THE MALFUNCTIONING PARTS BY SYMPTOM DIAGNOSIS

Perform symptom diagnosis and narrow down the malfunctioning parts.

>> GO TO 8.

6. CHECK COMBINATION METER POWER SUPPLY AND GROUND CIRCUITS

Inspect combination meter power supply and ground circuits. Refer to MWI-41, "COMBINATION METER : Diagnosis Procedure".

Is inspection result OK?

YES >> GO TO 7.
NO >> GO TO 8.

7. REPLACE COMBINATION METER

Replace combination meter.

>> GO TO 9.

8. REPAIR OR REPLACE MALFUNCTIONING PARTS

Repair or replace the malfunctioning parts.

NOTE:
If DTC is displayed, erase DTC after repair or replace malfunctioning parts.

>> GO TO 9.

9. FINAL CHECK

Check that the combination meter operates normally.

Do they operate normally?

YES >> INSPECTION END
NO >> GO TO 1.

FUNCTION DIAGNOSIS

METER SYSTEM

METER SYSTEM

METER SYSTEM : System Diagram

INFOID:0000000004504232

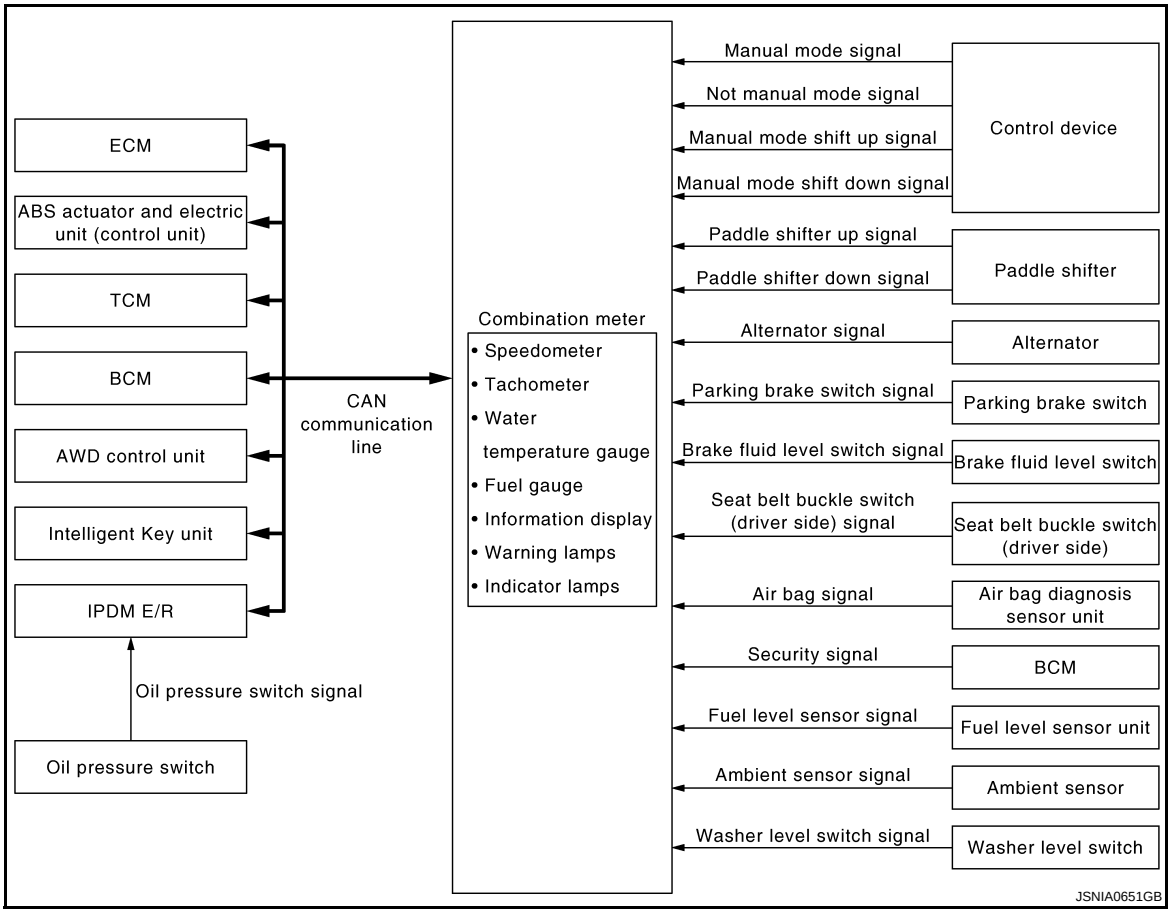

METER SYSTEM : System Description

INFOID:0000000004504233

COMBINATION METER

- The combination meter receives the information required to control the operation of each gauge, indicator/warning lamp, and information display via CAN communication from each unit, each switch, and sensor.
- The combination meter incorporates a trip computer that displays messages on the information display according to the information received from various units.
- The combination meter incorporates a buzzer function that sounds an audible alarm with the integrated buzzer device. Refer to WCS-5, "WARNING CHIME SYSTEM : System Description" for further details.
- The combination meter integrates the meter circuit check function and the segment check function that checks the information display operation.

IPDM E/R

- IPDM E/R reads the ON/OFF signals of the oil pressure switch and transmits the oil pressure switch signal to the combination meter via BCM with CAN communication.
- IPDM E/R is equipped with the diagnosis function. It can perform the operation check of oil pressure warning lamp with the auto active test and the diagnosis with CONSULT-III.

METER CONTROL FUNCTION LIST

System		Description	Signal source
Meter	Speedometer	Receives vehicle speed signal and indicates vehicle speed.	ABS actuator and electric unit (control unit)
	Tachometer	Receives engine speed signal and indicates engine speed.	ECM
Warning lamp	Oil pressure warning lamp	Receives oil pressure warning lamp signal and illuminates warning lamp.	IPDM E/R
Information display	Fuel gauge	Receives fuel level sensor signal and indicates fuel level.	Fuel level sensor unit
	Water temperature gauge	Receives engine coolant temperature signal and indicates coolant temperature.	ECM
	Possible driving distance	Calculates possible driving distance based on received fuel consumption monitor signal, vehicle speed signals and fuel level sensor signal and displays it.	ECM ABS actuator and electric unit (control unit) Fuel level sensor unit
	Average fuel consumption	Calculates average fuel consumption in a reset-to-reset interval based on received vehicle speed signals and fuel consumption monitor signal and displays it.	ECM ABS actuator and electric unit (control unit)
	Average vehicle speed	Calculates average vehicle speed in a reset-to-reset interval based on received vehicle speed signals and displays it.	ABS actuator and electric unit (control unit)
	Travel time	Displays accumulated key switch ON time from reset to reset.	—
	Odo/trip meter	Calculates accumulated travel distance based on received vehicle speed signals and displays it.	ABS actuator and electric unit (control unit)
	Ambient temperature	Corrects ambient temperature value based on received ambient sensor signals and displays it.	Ambient sensor

ARRANGEMENT OF COMBINATION METER

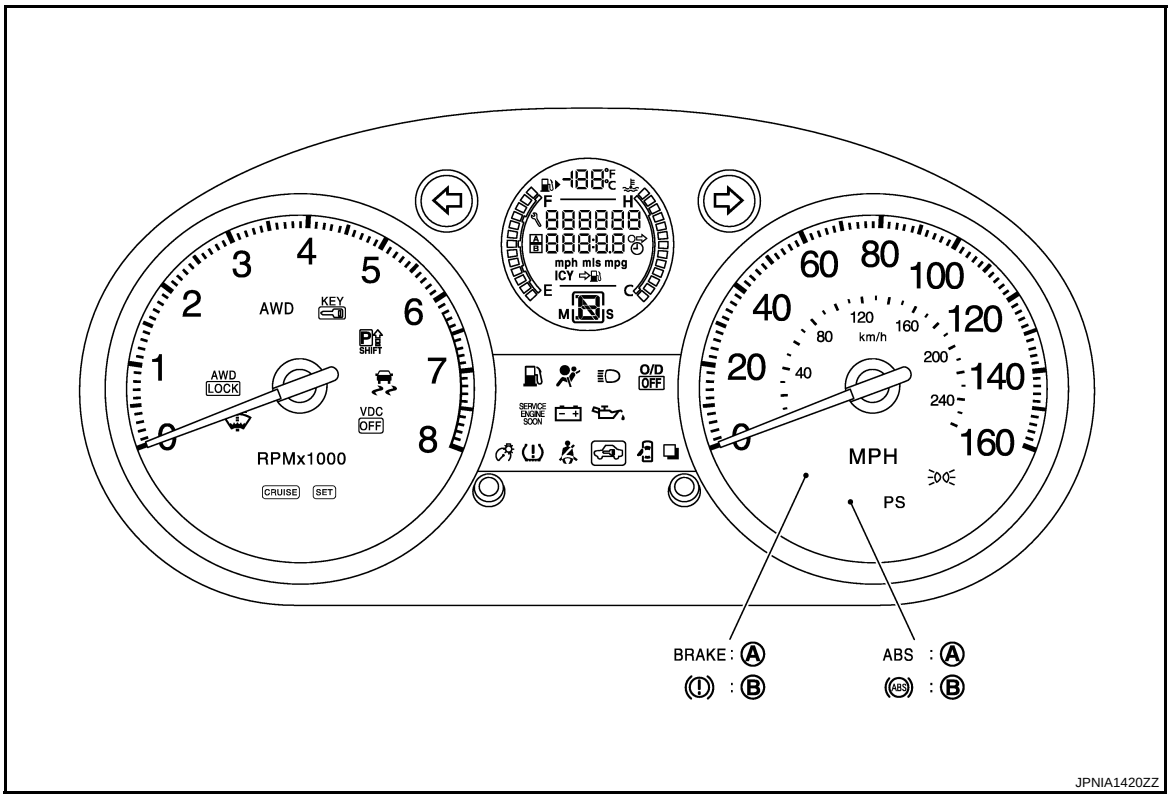

A. For U.S.A. B. Except for U.S.A.

METER SYSTEM : Component Parts Location

INFOID:0000000004504234

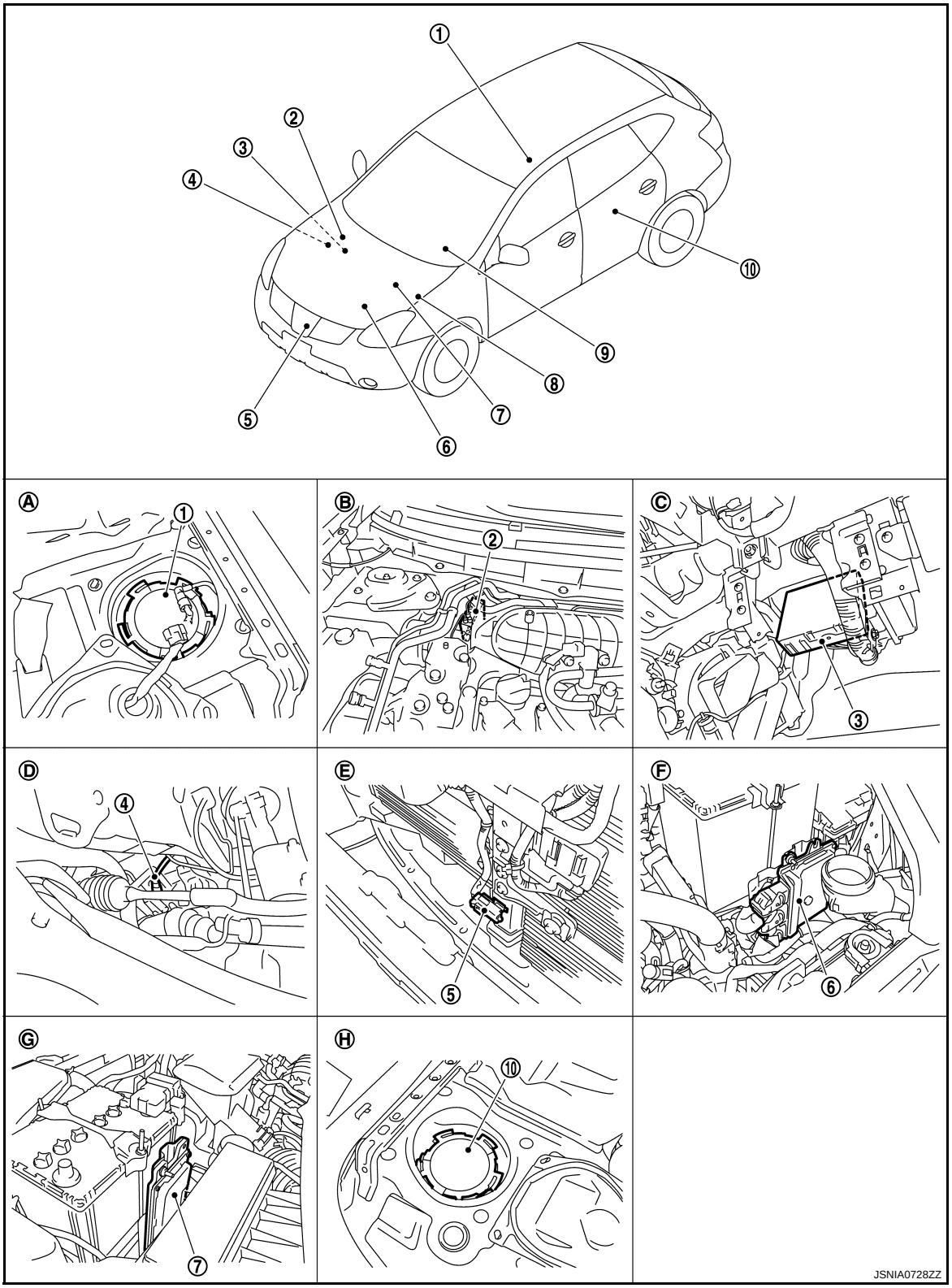

1.	Fuel level sensor unit and fuel pump (fuel level sensor)	2.	ABS actuator and electric unit (control unit)	3.	BCM
4.	Oil pressure switch	5.	Ambient sensor	6.	TCM
7.	ECM	8.	IPDM E/R	9.	Combination meter
10.	Fuel level sensor unit (sub)				
A.	Lower right side of rear seat	B.	Left side of engine room	C.	Over the glove box

D. Left side of engine room
E. Behind of front bumper center
F. Right side of engine room
G. Right side of engine room
H. Lower left side of rear seat

METER SYSTEM : Component Description

INFOID:0000000004504235

Unit	Description
Combination meter	Controls the following with the signals received from each unit via CAN communication and the signals from switches and sensors. • Speedometer • Tachometer • Warning lamps • Indicator lamps • Information display • Warning chime
IPDM E/R	Reads the ON/OFF signals of the oil pressure switch and transmits the oil pressure switch signal to the combination meter via BCM with CAN communication line.
• Fuel level sensor unit and fuel pump (fuel level sensor) • Fuel level sensor unit (sub)	Refer to MWI-43, "Description".
Oil pressure switch	Refer to MWI-47, "Description".
ECM	Transmits the following signals to the combination meter with CAN communication line. • Engine speed signal • Engine coolant temperature signal • Fuel consumption monitor signal
ABS actuator and electric unit (control unit)	Transmits the vehicle speed signal to the combination meter with CAN communication line.
BCM	Transmits signals provided by various units to the combination meter with CAN communication line.
Control device	Transmits the following signals to the combination meter. • Manual mode signal • Not manual mode signal • Manual mode shift up signal • Manual mode shift down signal
Paddle shifter	Transmits paddle shifter up signal and paddle shifter down signal to the combination meter.
TCM	Transmits shift position signal to the combination meter.
Brake fluid level switch	Transmits the brake fluid level switch signal to the combination meter.
Parking brake switch	Refer to WCS-24, "Description".
Ambient sensor	Refer to MWI-49, "Description".

SPEEDOMETER

SPEEDOMETER : System Diagram

INFOID:0000000004504236

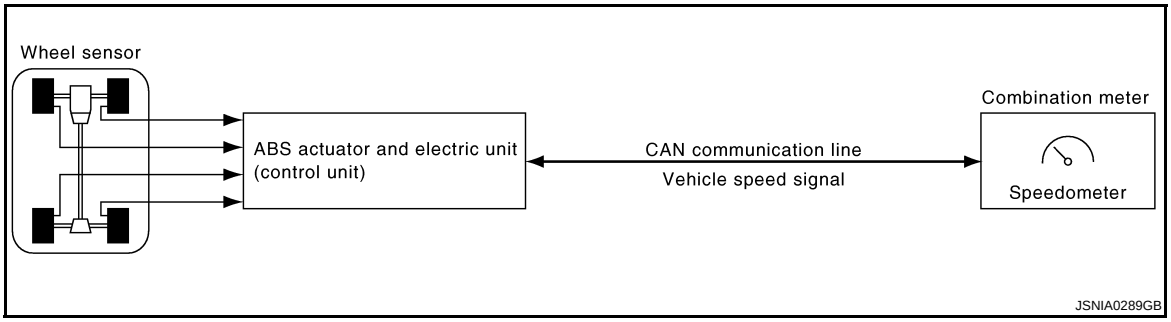

SPEEDOMETER : System Description

INFOID:0000000004504237

- The ABS actuator and electric unit (control unit) converts the rectangular wave signal provided by the wheel sensor to a vehicle speed signal and transmits it to the combination meter via CAN communication.
- The combination meter indicates the vehicle speed to the speedometer according to the vehicle speed signal received via CAN communication.

SPEEDOMETER : Component Parts Location

INFOID:0000000004504238

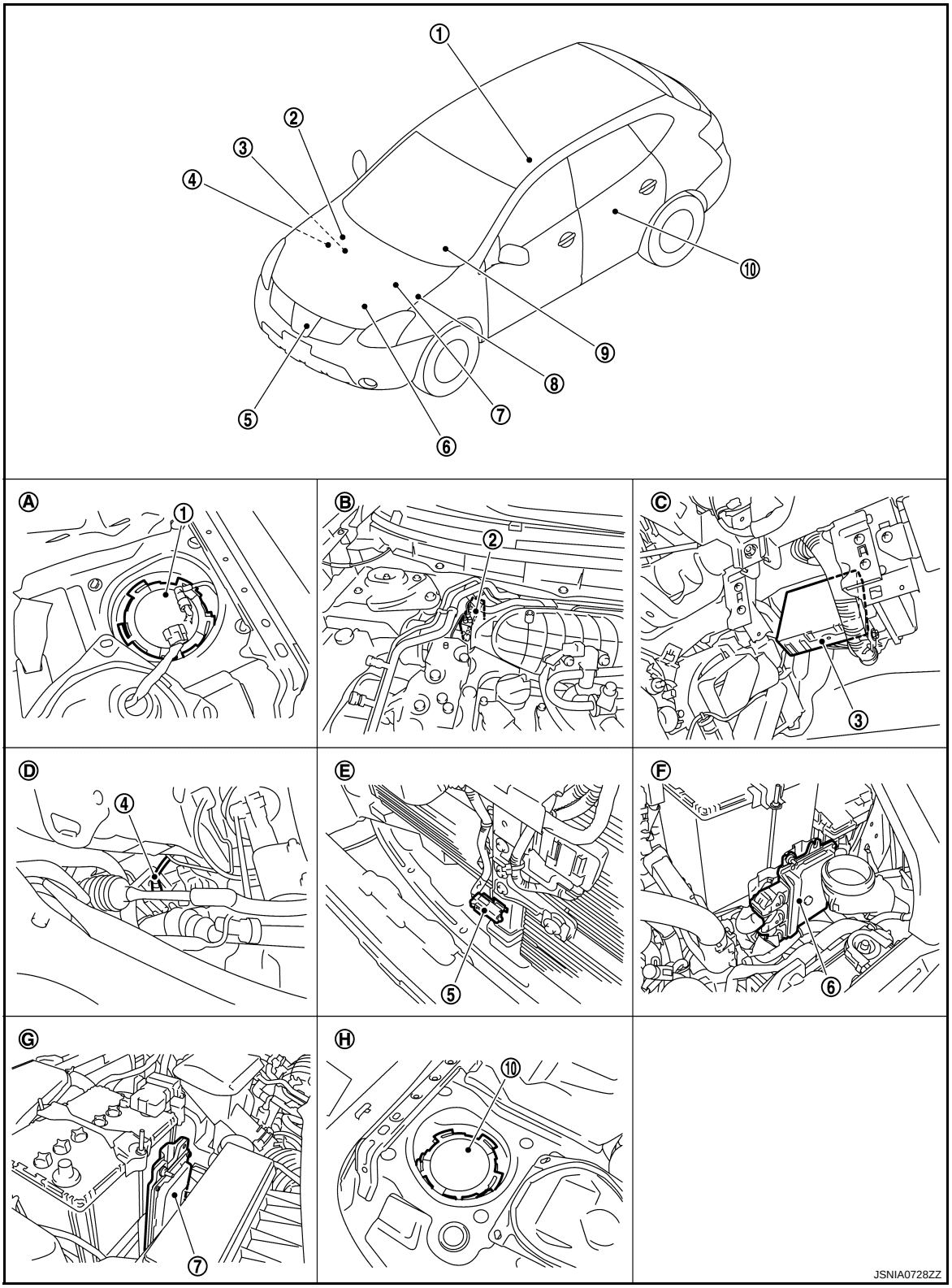

1.	Fuel level sensor unit and fuel pump (fuel level sensor)	2.	ABS actuator and electric unit (control unit)	3.	BCM
4.	Oil pressure switch	5.	Ambient sensor	6.	TCM
7.	ECM	8.	IPDM E/R	9.	Combination meter
10.	Fuel level sensor unit (sub)				
A.	Lower right side of rear seat	B.	Left side of engine room	C.	Over the glove box

D. Left side of engine room
E. Behind of front bumper center
F. Right side of engine room
G. Right side of engine room
H. Lower left side of rear seat

SPEEDOMETER : Component Description

INFOID:0000000004504239

Unit	Description
Combination meter	Indicates the vehicle speed to the speedometer according to the vehicle speed signal received from ABS actuator and electric unit (control unit) via CAN communication.
ABS actuator and electric unit (control unit)	Transmits the vehicle speed signal to the combination meter with CAN communication line.

TACHOMETER

TACHOMETER : System Diagram

INFOID:0000000004504240

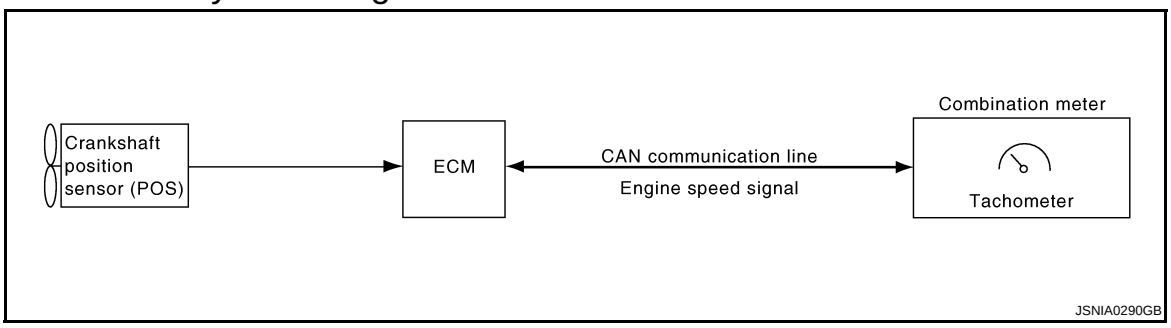

TACHOMETER : System Description

INFOID:0000000004504241

- ECM converts the pulse signal provided by the crankshaft position sensor to an engine speed signal and transmits it to the combination meter with CAN communication line.
- The combination meter indicates the engine speed to the tachometer according to the engine speed signal received via CAN communication.

TACHOMETER : Component Parts Location

INFOID:0000000004504242

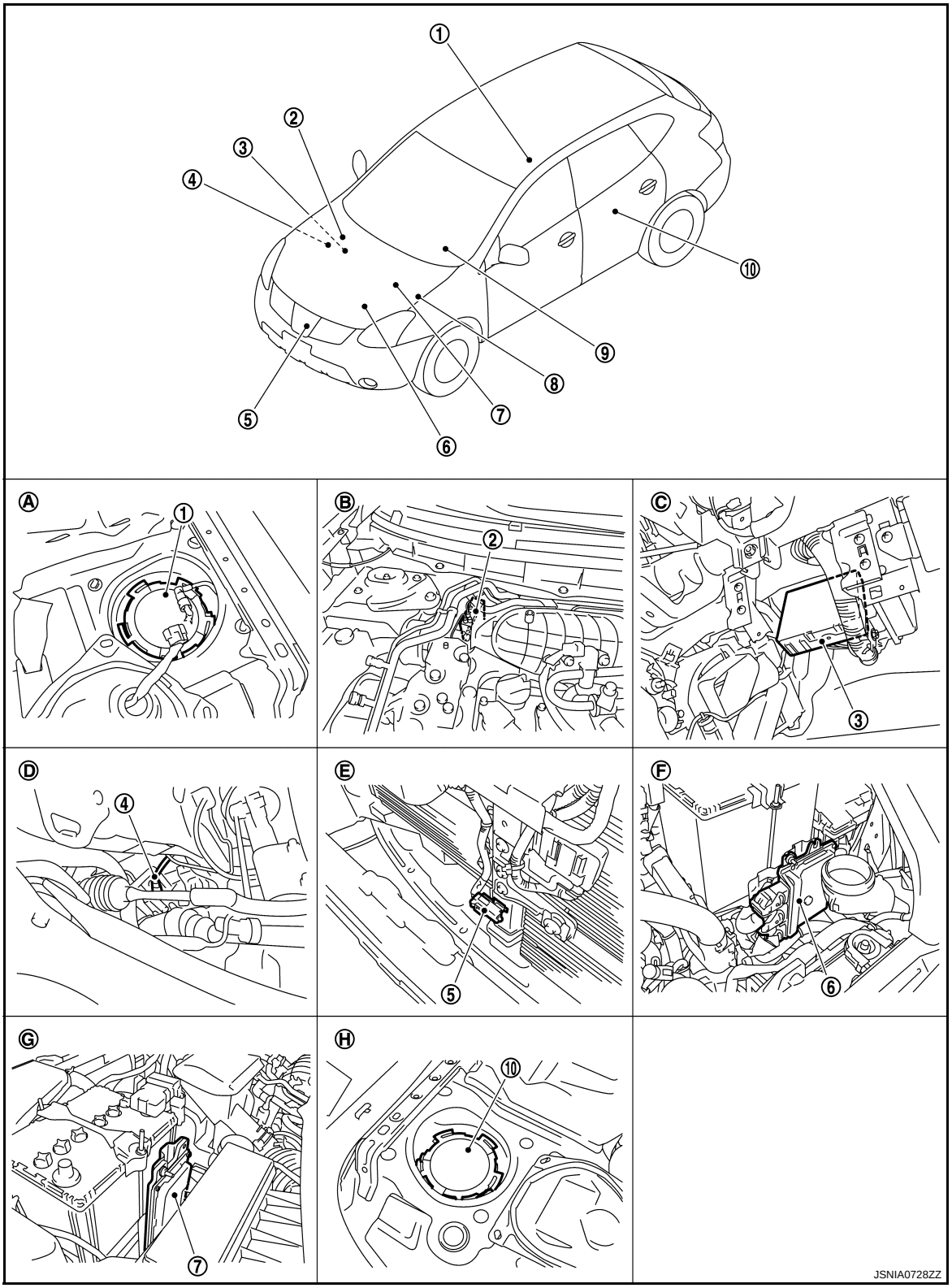

1.	Fuel level sensor unit and fuel pump (fuel level sensor)	2.	ABS actuator and electric unit (control unit)	3.	BCM
4.	Oil pressure switch	5.	Ambient sensor	6.	TCM
7.	ECM	8.	IPDM E/R	9.	Combination meter
10.	Fuel level sensor unit (sub)				
A.	Lower right side of rear seat	B.	Left side of engine room	C.	Over the glove box

D. Left side of engine room
E. Behind of front bumper center
F. Right side of engine room
G. Right side of engine room
H. Lower left side of rear seat

TACHOMETER : Component Description

INFOID:0000000004504243

Unit	Description
Combination meter	Indicates the engine speed to the tachometer according to the engine speed signal received from ECM via CAN communication.
ECM	Transmits the engine speed signal to the combination meter with CAN communication line.

WATER TEMPERATURE GAUGE

WATER TEMPERATURE GAUGE : System Diagram

INFOID:0000000004504244

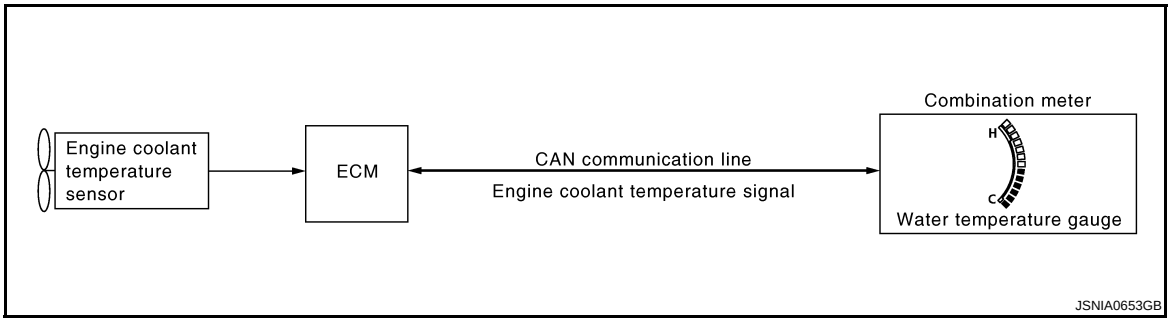

WATER TEMPERATURE GAUGE : System Description

INFOID:0000000004504245

- ECM reads the engine coolant temperature signal from the engine coolant temperature sensor and transmits the signal to the combination meter via CAN communication.
- The combination meter indicates the engine coolant temperature to the water temperature gauge according to the engine coolant temperature signal received via CAN communication.

WATER TEMPERATURE GAUGE : Component Parts Location

INFOID:0000000004504246

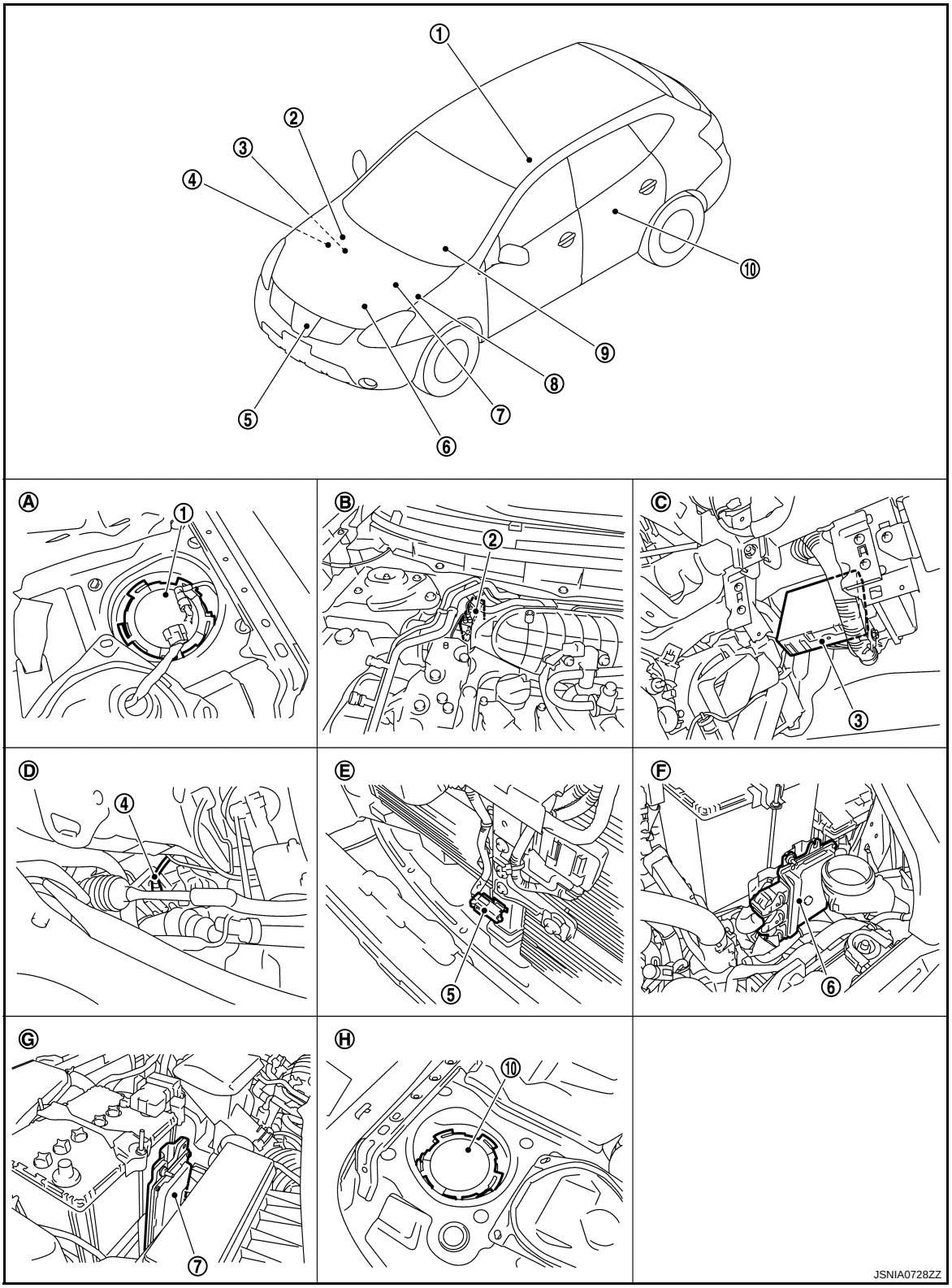

1.	Fuel level sensor unit and fuel pump (fuel level sensor)	2.	ABS actuator and electric unit (control unit)	3.	BCM
4.	Oil pressure switch	5.	Ambient sensor	6.	TCM
7.	ECM	8.	IPDM E/R	9.	Combination meter
10.	Fuel level sensor unit (sub)				
A.	Lower right side of rear seat	B.	Left side of engine room	C.	Over the glove box

D. Left side of engine room
E. Behind of front bumper center
F. Right side of engine room
G. Right side of engine room
H. Lower left side of rear seat

WATER TEMPERATURE GAUGE : Component Description

INFOID:0000000004504247

Unit	Description
Combination meter	Indicates the engine coolant temperature to the water temperature gauge according to the engine coolant temperature signal received from ECM via CAN communication.
ECM	Transmits the engine coolant temperature signal to the combination meter via CAN communication.

FUEL GAUGE

FUEL GAUGE : System Diagram

INFOID:0000000004504248

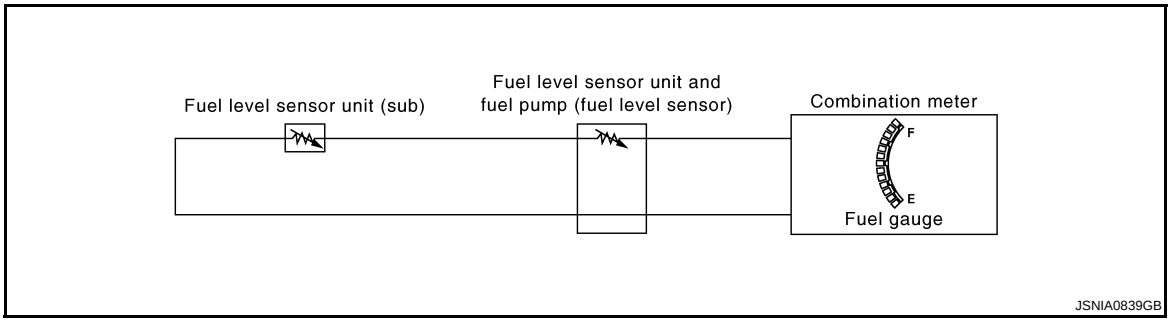

FUEL GAUGE : System Description

INFOID:0000000004504249

CONTROL OUTLINE

The combination meter reads the fuel level sensor signal from the fuel level sensor unit and fuel pump (fuel level sensor) and indicates the fuel level to the fuel gauge.

REFUEL CONTROL

The combination meter accelerates the fuel gauge segment movement if the all conditions listed below are met, or the ignition switch is ON from OFF.

- Ignition switch is ON position.
- The vehicle is not moving.
- The fuel level changes by 15 ℓ (4 US gal, 3-3/10 Imp gal) or more.

FUEL GAUGE : Component Parts Location

INFOID:0000000004504250

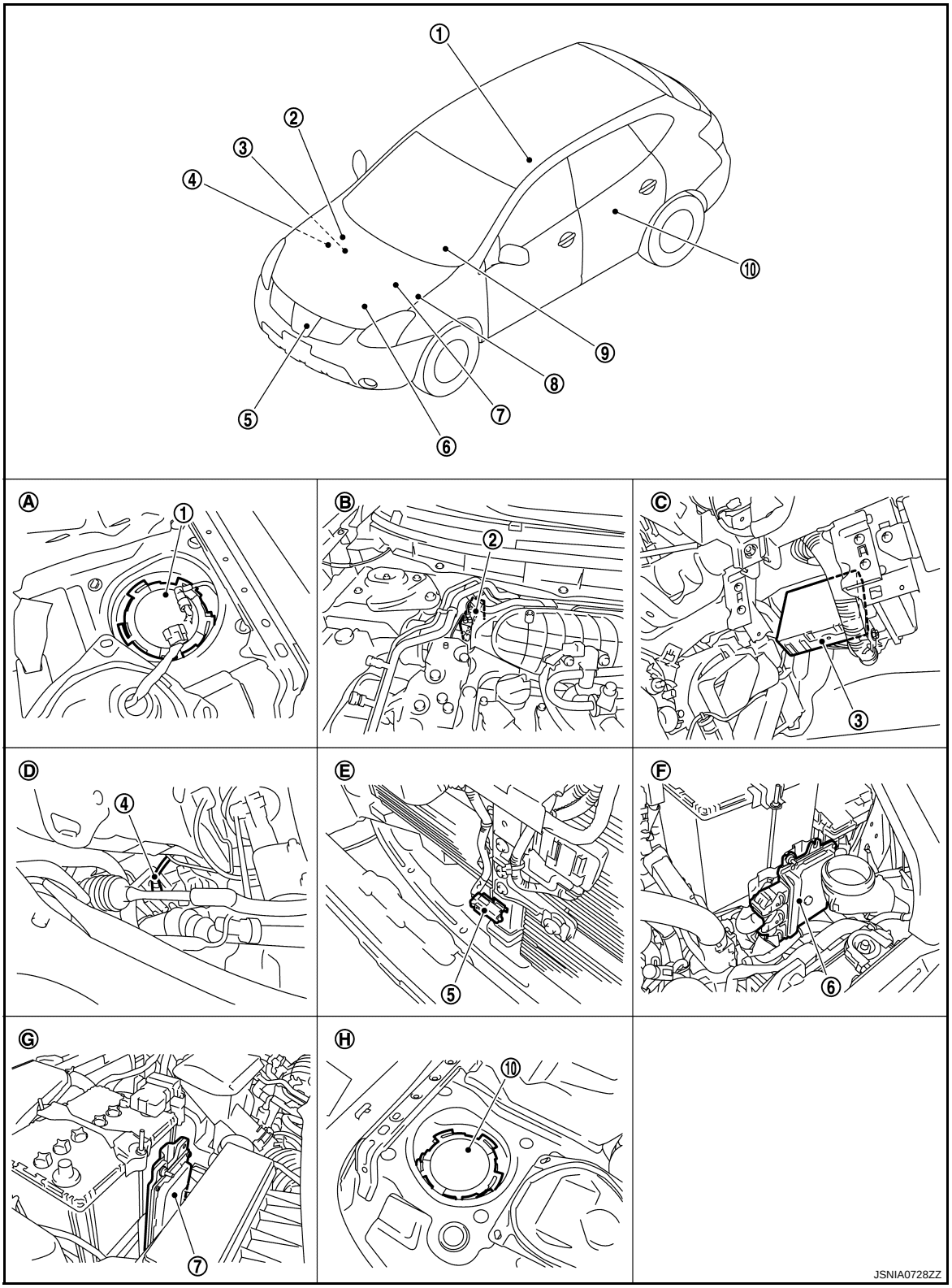

1.	Fuel level sensor unit and fuel pump (fuel level sensor)	2.	ABS actuator and electric unit (control unit)	3.	BCM
4.	Oil pressure switch	5.	Ambient sensor	6.	TCM
7.	ECM	8.	IPDM E/R	9.	Combination meter
10.	Fuel level sensor unit (sub)				
A.	Lower right side of rear seat	B.	Left side of engine room	C.	Over the glove box

D. Left side of engine room
E. Behind of front bumper center
F. Right side of engine room
G. Right side of engine room
H. Lower left side of rear seat

FUEL GAUGE : Component Description

INFOID:0000000004504251

Unit	Description
Combination meter	Indicates the fuel gauge according to the fuel level sensor signal received from the fuel level sensor unit and fuel pump (fuel level sensor)
• Fuel level sensor unit and fuel pump (fuel level sensor) • Fuel level sensor unit (sub)	Refer to MWI-43, "Description".

ODO/TRIP METER

ODO/TRIP METER : System Diagram

INFOID:0000000004504252

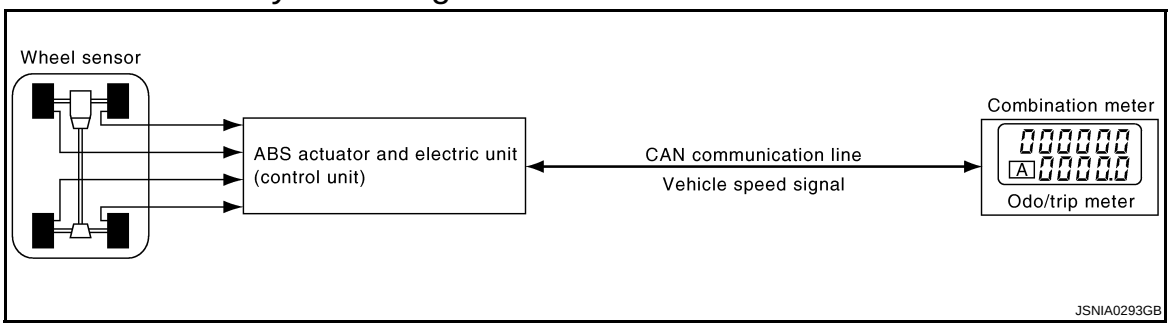

ODO/TRIP METER : System Description

INFOID:0000000004504253

- The ABS actuator and electric unit (control unit) reads the rectangular wave signal provided by the wheel sensor and transmits the vehicle speed signal to the combination meter via CAN communication.
- The combination meter converts the vehicle speed signal received via CAN communication to mileage, and it displays the accumulated mileage to the odo/trip meter.

ODO/TRIP METER : Component Parts Location

INFOID:0000000004504254

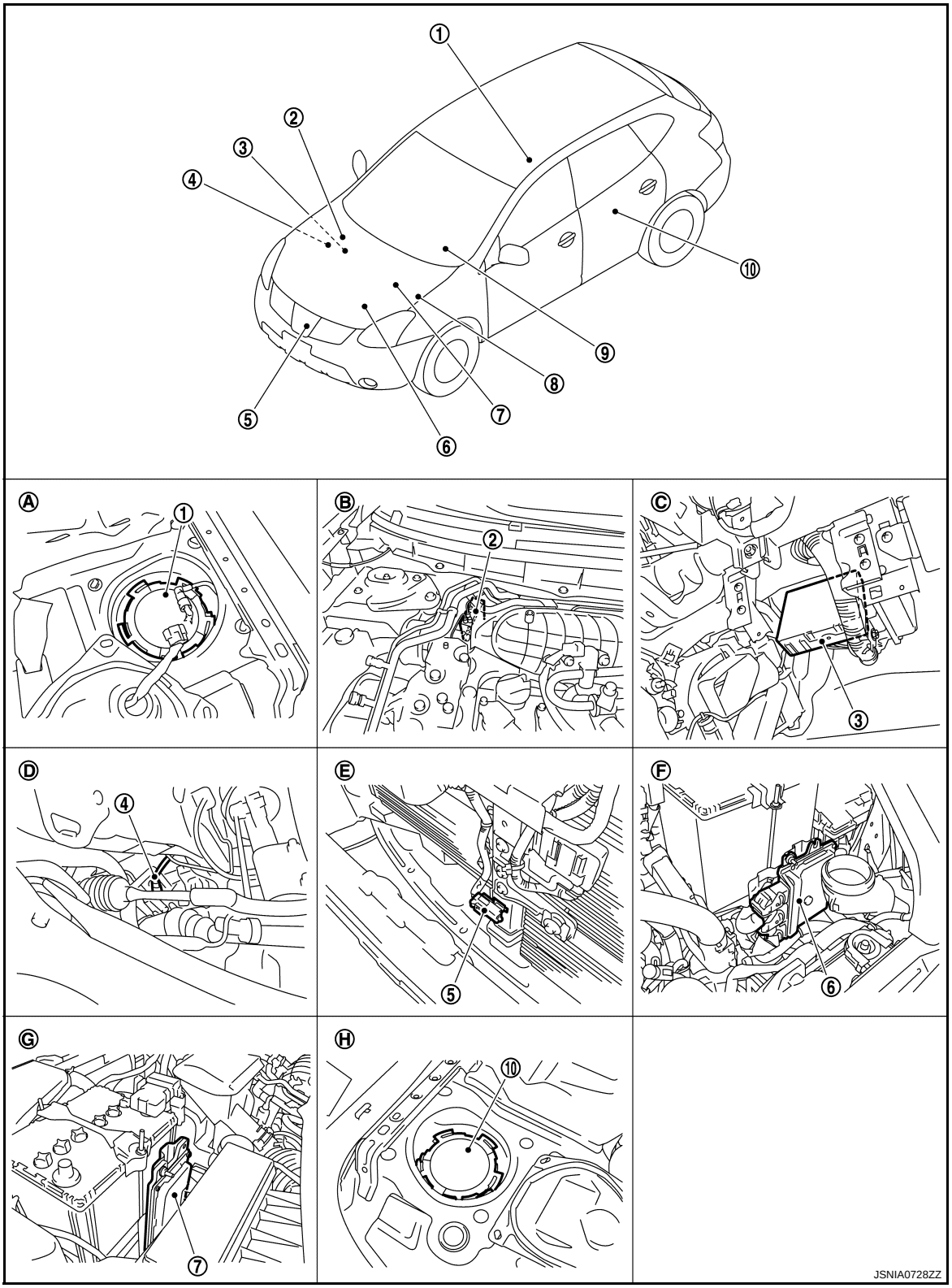

1.	Fuel level sensor unit and fuel pump (fuel level sensor)	2.	ABS actuator and electric unit (control unit)	3.	BCM
4.	Oil pressure switch	5.	Ambient sensor	6.	TCM
7.	ECM	8.	IPDM E/R	9.	Combination meter
10.	Fuel level sensor unit (sub)				
A.	Lower right side of rear seat	B.	Left side of engine room	C.	Over the glove box

D. Left side of engine room
E. Behind of front bumper center
F. Right side of engine room
G. Right side of engine room
H. Lower left side of rear seat

ODO/TRIP METER : Component Description

INFOID:0000000004504255

Unit	Description
Combination meter	Converts the vehicle speed signal received from the ABS actuator and electric unit (control unit) via CAN communication to mileage, and it displays the accumulated mileage to the odo/trip meter.
ABS actuator and electric unit (control unit)	Transmits the vehicle speed signal to the combination meter via CAN communication.

SHIFT POSITION INDICATOR

SHIFT POSITION INDICATOR : System Diagram

INFOID:0000000004504256

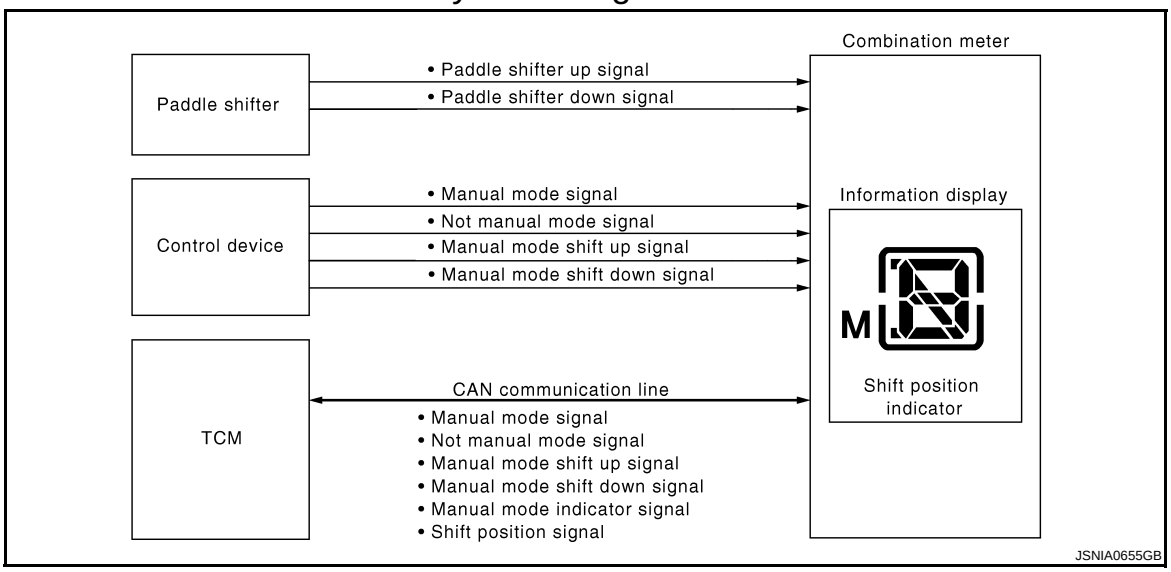

SHIFT POSITION INDICATOR : System Description

INFOID:0000000004504257

Shift position is displayed in the information display LCD in the combination meter.

WITH MANUAL MODE MODELS

Manual Mode

When operated with control device

- The combination meter receives the manual mode signal, manual mode shift up signal, and manual mode shift down signal from control device and transmits them to TCM via CAN communication.
- TCM recognizes the manual mode operation status according to the manual mode signal, manual mode shift up signal, and manual mode shift down signal received via CAN communication and transmits the manual mode indicator signal to the combination meter via CAN communication.
- The combination meter indicates shift position according to the manual mode indicator signal received via CAN communication.

When operated with paddle shifter

- The combination meter receives the manual mode signal from control device, paddle shifter up signal and paddle shifter down signal from paddle shifter and transmits them to TCM via CAN communication.
- TCM recognizes the manual mode operation status according to the manual mode signal, manual mode shift up signal, and manual mode shift down signal received via CAN communication and transmits the manual mode indicator signal to the combination meter via CAN communication.
- The combination meter indicates shift position according to the manual mode indicator signal received via CAN communication.

Not Manual Mode (Auto Mode)

- TCM transmits the shift position signal and the not manual mode signal to the combination meter via CAN communication.
- The combination meter indicates shift position according to the shift position signal received via CAN communication.

WITHOUT MANUAL MODE MODELS

- TCM transmits the shift position signal to the combination meter via CAN communication.
- The combination meter indicates shift position according to the shift position signal received via CAN communication.

SHIFT POSITION INDICATOR : Component Parts Location

INFOID:0000000004504258

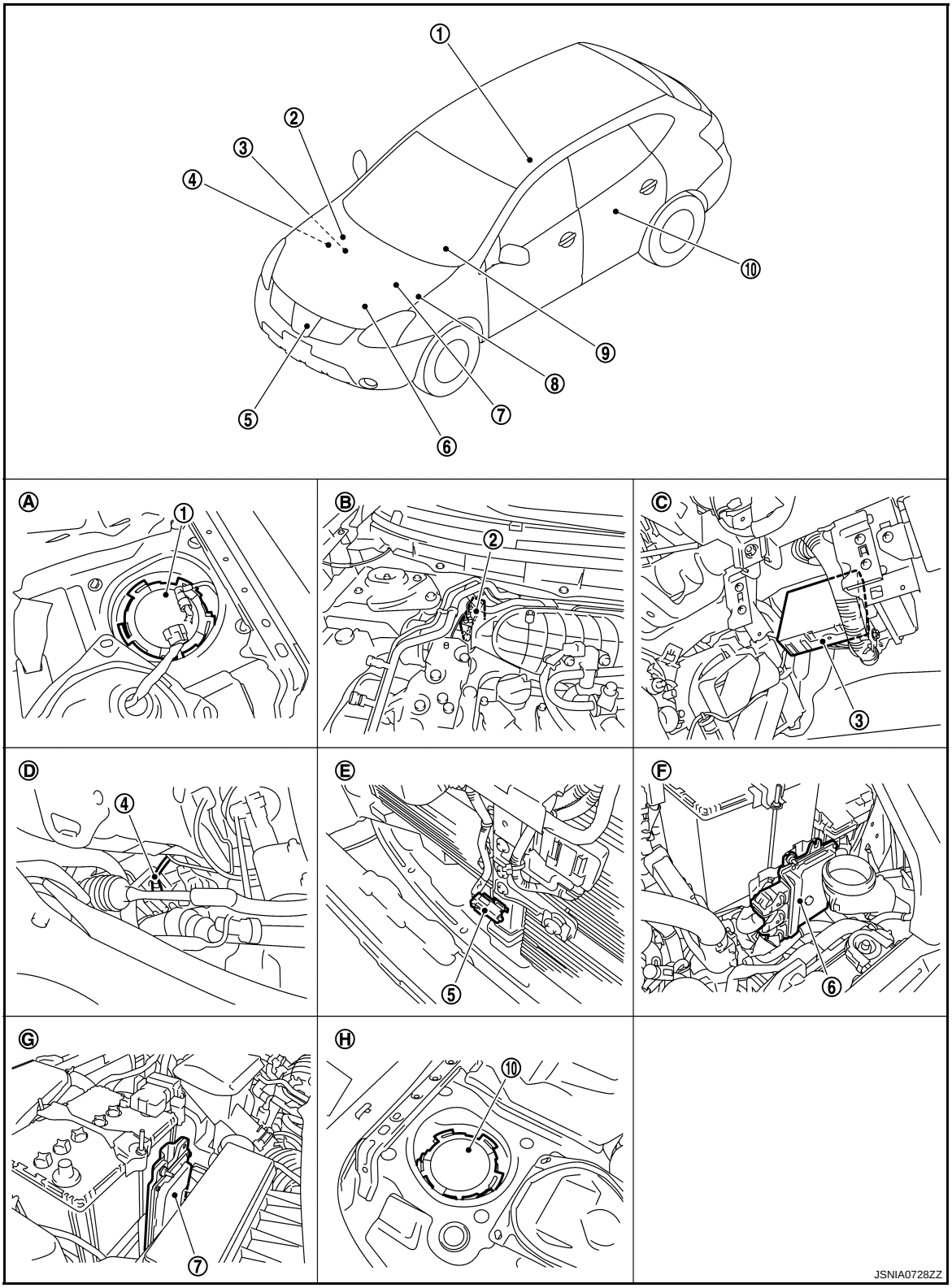

1.	Fuel level sensor unit and fuel pump (fuel level sensor)	2.	ABS actuator and electric unit (control unit)	3.	BCM
4.	Oil pressure switch	5.	Ambient sensor	6.	TCM
7.	ECM	8.	IPDM E/R	9.	Combination meter
10.	Fuel level sensor unit (sub)				
A.	Lower right side of rear seat	B.	Left side of engine room	C.	Over the glove box

D. Left side of engine room
E. Behind of front bumper center
F. Right side of engine room
G. Right side of engine room
H. Lower left side of rear seat

SHIFT POSITION INDICATOR : Component Description

INFOID:0000000004504259

Unit	Description
Combination meter	Displays the shift position on the information display with shift position signal and manual mode indicator signal received from TCM.
Control device	Transmits the following signals to the combination meter. • Manual mode signal • Not manual mode signal • Manual mode shift up signal • Manual mode shift down signal
Paddle shifter	Transmits the paddle shifter up signal and paddle shifter down signal to the combination meter.
TCM	Transmits the shift position signal and the manual mode indicator signal to the combination meter via CAN communication.

WARNING LAMPS/INDICATOR LAMPS

WARNING LAMPS/INDICATOR LAMPS : System Diagram

INFOID:0000000004504260

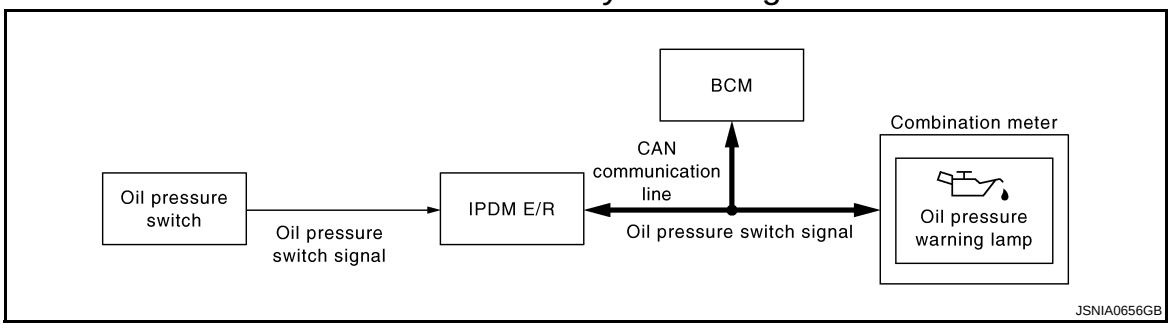

WARNING LAMPS/INDICATOR LAMPS : System Description

INFOID:0000000004504261

OIL PRESSURE WARNING LAMP

- IPDM E/R reads the ON/OFF signals from the oil pressure switch and transmits the oil pressure switch signal to the combination meter via BCM with the CAN communication line.
- The combination meter turns the oil pressure warning lamp ON/OFF according to the oil pressure switch signal received via CAN communication.

WARNING LAMPS/INDICATOR LAMPS : Component Parts Location

INFOID:0000000004504262

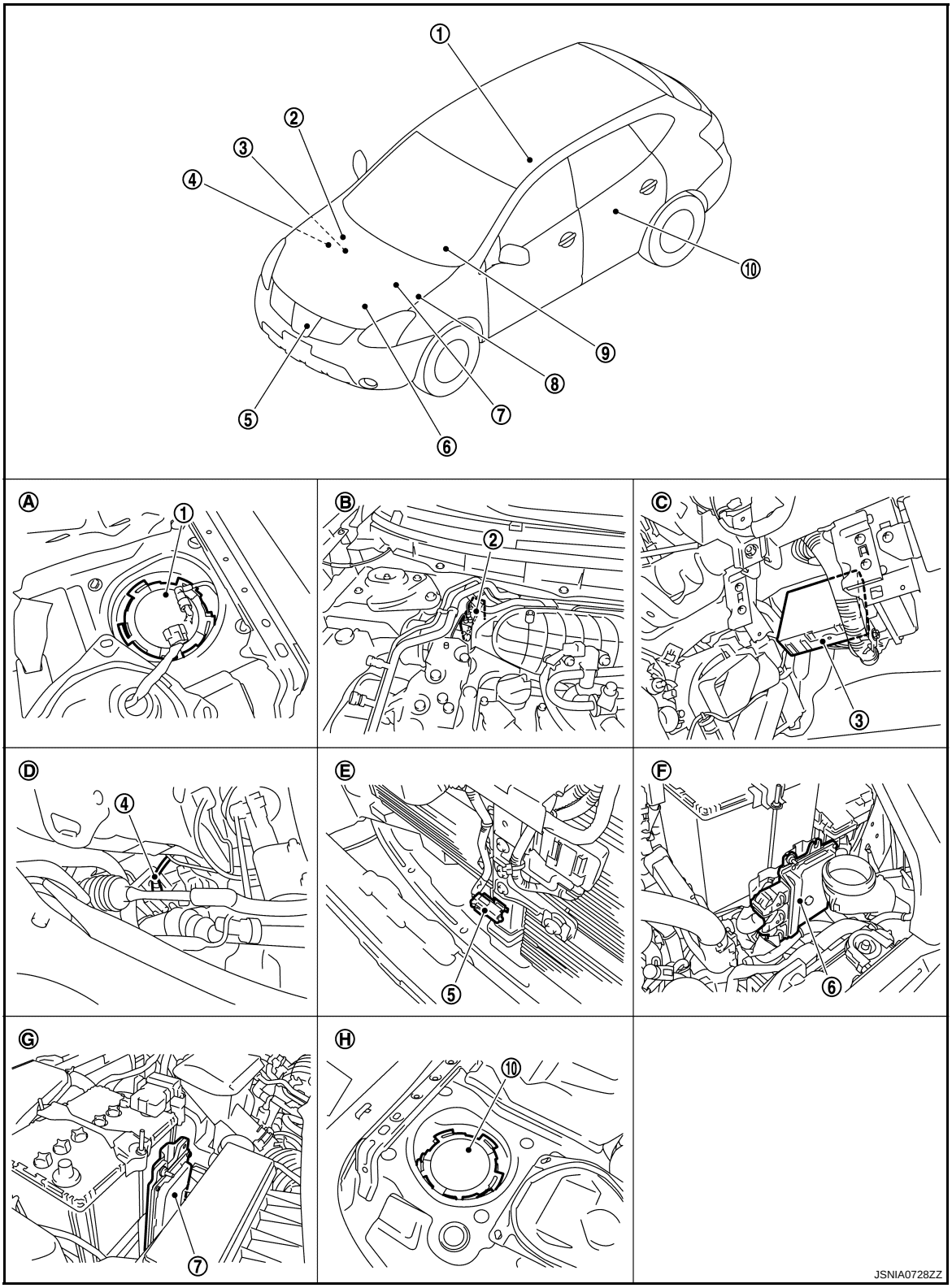

1.	Fuel level sensor unit and fuel pump (fuel level sensor)	2.	ABS actuator and electric unit (control unit)	3.	BCM
4.	Oil pressure switch	5.	Ambient sensor	6.	TCM
7.	ECM	8.	IPDM E/R	9.	Combination meter
10.	Fuel level sensor unit (sub)				
A.	Lower right side of rear seat	B.	Left side of engine room	C.	Over the glove box

D. Left side of engine room
E. Behind of front bumper center
F. Right side of engine room
G. Right side of engine room
H. Lower left side of rear seat

WARNING LAMPS/INDICATOR LAMPS : Component Description

INFOID:0000000004504263

Unit	Description
Combination meter	Turns the oil pressure warning lamp ON/OFF according to the oil pressure switch signal received from BCM by means of CAN communication.
IPDM E/R	Reads the ON/OFF signals from the oil pressure switch and transmits the oil pressure switch signal to the combination meter via BCM with the CAN communication.
Oil pressure switch	Refer to MWI-47, "Description".
BCM	Transmits the oil pressure switch signal received from IPDM E/R via CAN communication to the combination meter via CAN communication.

METER ILLUMINATION CONTROL

METER ILLUMINATION CONTROL : System Diagram

INFOID:0000000004504264

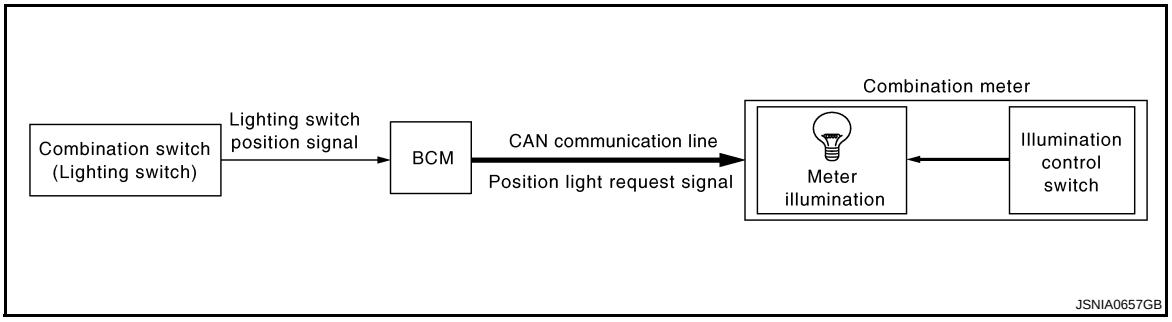

METER ILLUMINATION CONTROL : System Description

INFOID:0000000004504265

The combination meter controls the meter illumination according to the position light request signal transmitted from BCM via CAN communication and the signal from illumination control switch joined with the combination meter.

METER ILLUMINATION CONTROL : Component Parts Location

INFOID:0000000004504266

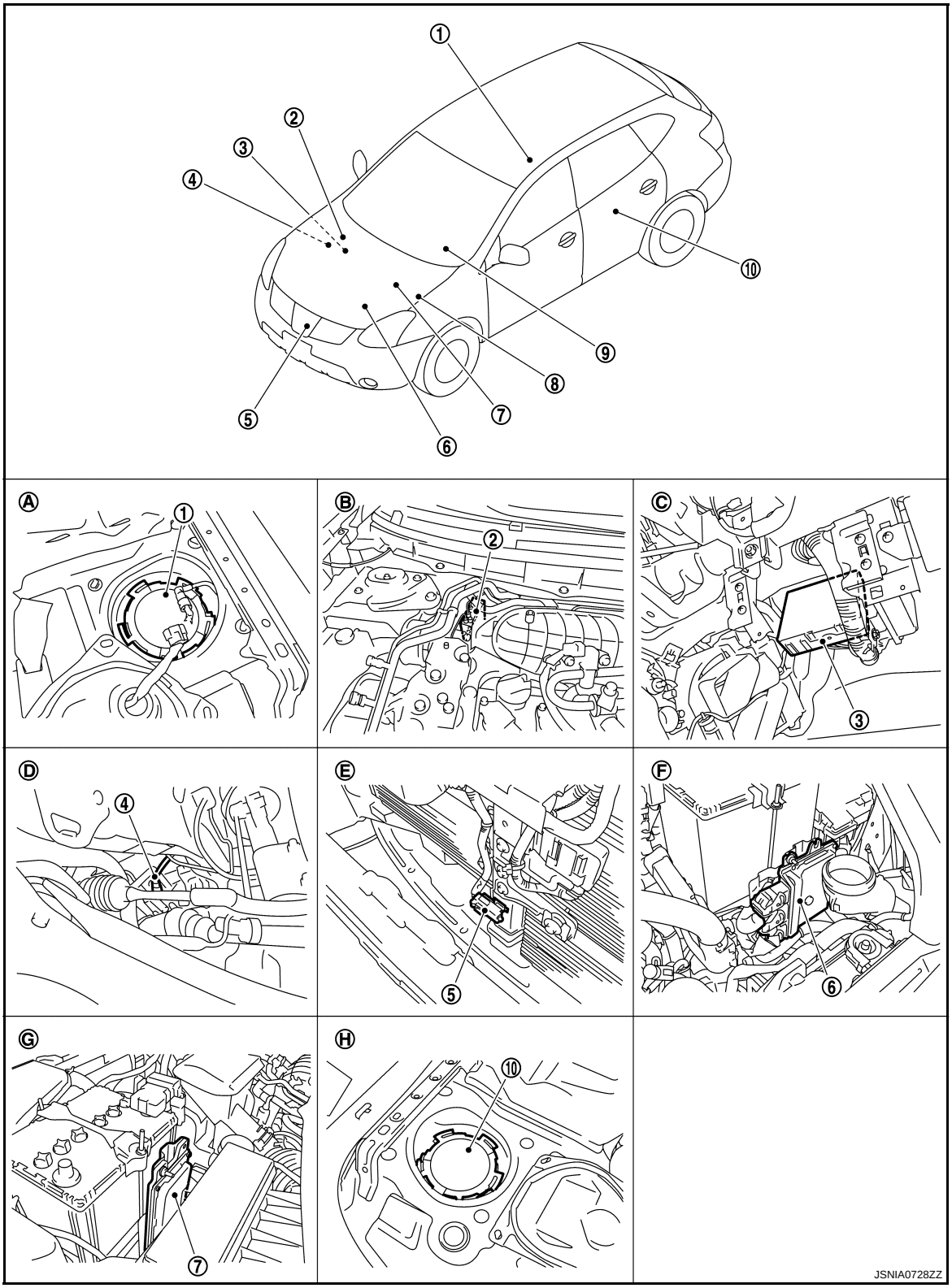

1.	Fuel level sensor unit and fuel pump (fuel level sensor)	2.	ABS actuator and electric unit (control unit)	3.	BCM
4.	Oil pressure switch	5.	Ambient sensor	6.	TCM
7.	ECM	8.	IPDM E/R	9.	Combination meter
10.	Fuel level sensor unit (sub)				
A.	Lower right side of rear seat	B.	Left side of engine room	C.	Over the glove box

D. Left side of engine room
E. Behind of front bumper center
F. Right side of engine room
G. Right side of engine room
H. Lower left side of rear seat

METER ILLUMINATION CONTROL : Component Description

INFOID:0000000004504267

Unit	Description
Combination meter	Controls the meter illumination according to the position light request signal transmitted from BCM via CAN communication and the signal from illumination control switch integrated with the combination meter.
BCM	Transmits the position light request signal to the combination meter via CAN communication.

INFORMATION DISPLAY

INFORMATION DISPLAY : System Diagram

INFOID:0000000004504268

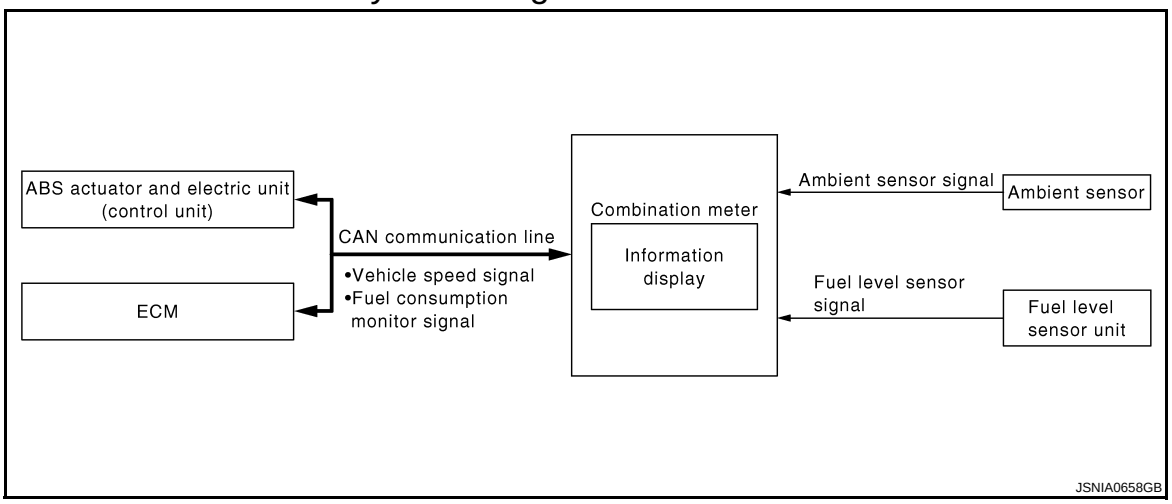

INFORMATION DISPLAY : System Description

INFOID:0000000004504269

DESCRIPTION

The combination meter incorporates a trip computer that displays the information according to the signal received from various units.

ODO/TRIP METER

- The combination meter receives the vehicle speed signal from the ABS actuator and electric unit (control unit) with the CAN communication line.
- The combination meter indicates the travel distance calculated by the vehicle speed signal received.

POSSIBLE DRIVING DISTANCE

- Combination meter receives the fuel consumption signals from ECM and the vehicle speed signals from ABS actuator and electric unit (control unit) with the CAN communication line.
- Combination meter calculates the possible driving distance from the signals through CAN communication line and the fuel level signals from the fuel level sensor to display.

AVERAGE FUEL CONSUMPTION

- The combination meter receives the fuel consumption monitor signal from ECM and the vehicle speed signal from the ABS actuator and electric unit (control unit) via CAN communication.
- The combination meter indicates the average fuel consumption calculated by the signal received.
- The average fuel consumption displayed on the information display is uploaded at approximately 30-second intervals.
- When disconnecting the battery or resetting average fuel consumption, “––” is displayed until meeting the all conditions listed below.
- Turn ignition switch ON and wait 30 seconds.
- The vehicle runs more than 500 m (0.31 mile).

AVERAGE VEHICLE SPEED

- The combination meter receives the vehicle speed signal from the ABS actuator and electric unit (control unit) with the CAN communication line.
- The combination meter indicates the average vehicle speed according to the vehicle speed signal received and the time measured in the combination meter.
- The average vehicle speed displayed on the information display is uploaded at approximately 30-second intervals.
- When disconnecting the battery or resetting average fuel consumption, "––" is displayed until meeting the all conditions listed below.
- Turn ignition switch ON and wait 30 seconds.
- The vehicle runs more than 500 m (0.31 mile).

TRAVEL TIME

Measures the driving time (ignition switch ON time) in the combination meter and displays it.

AMBIENT AIR TEMPERATURE

- The combination meter indicates the ambient air temperature calculated by the ambient sensor signal received from the ambient sensor.
- The indicated temperature does not increase if the vehicle speed is less than 20 km/h (12.4 MPH).

Load Ice Warming

When the ambient air temperature falls below 3°C (37°F), warning is indicated on the following segment of the information display.

- "°C (°F)" -Blinking for the first one minute, and then turned ON.
- "ICY" -Turning ON

INFORMATION DISPLAY : Component Parts Location

INFOID:0000000004504270

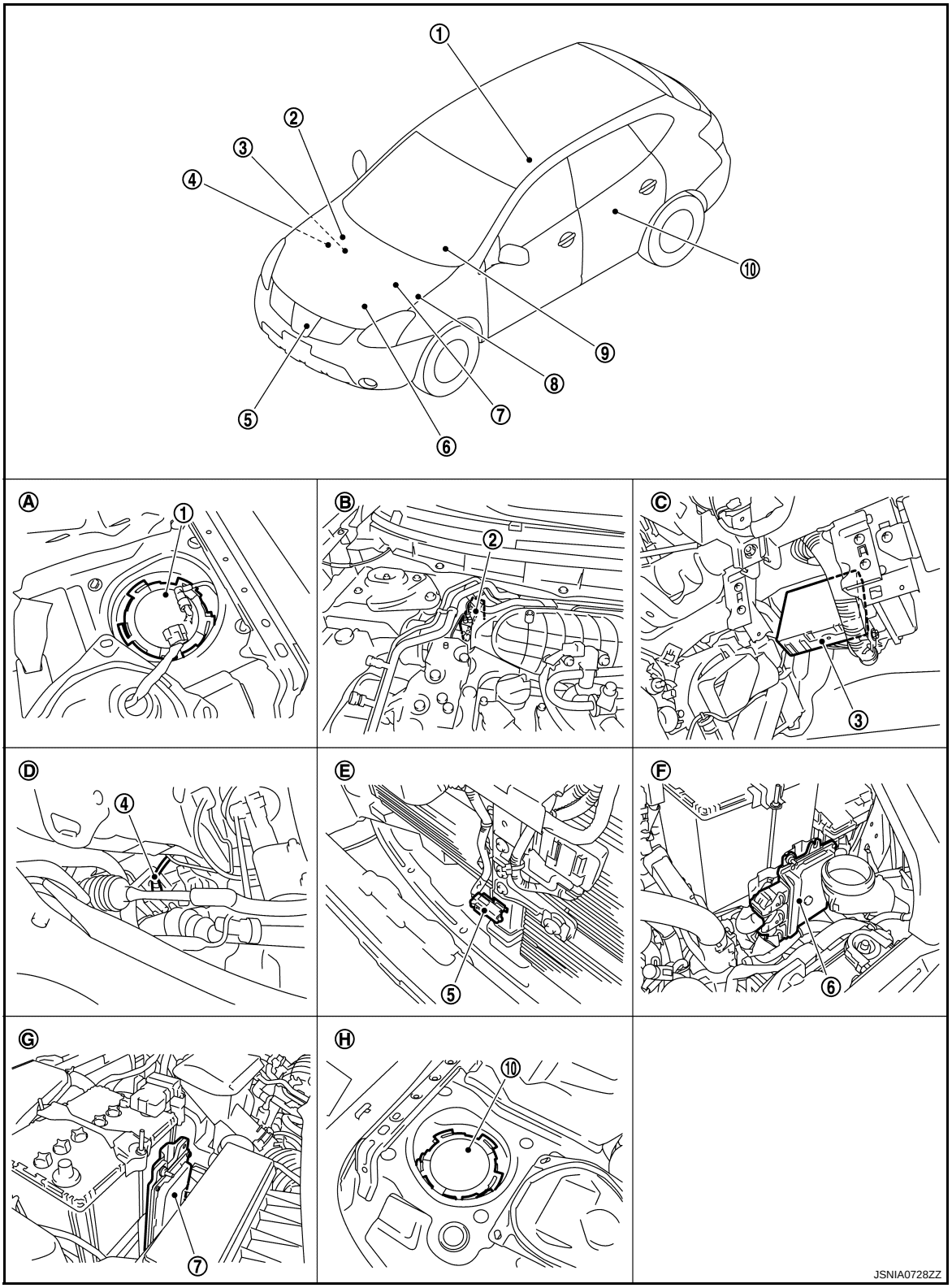

1.	Fuel level sensor unit and fuel pump (fuel level sensor)	2.	ABS actuator and electric unit (control unit)	3.	BCM
4.	Oil pressure switch	5.	Ambient sensor	6.	TCM
7.	ECM	8.	IPDM E/R	9.	Combination meter
10.	Fuel level sensor unit (sub)				
A.	Lower right side of rear seat	B.	Left side of engine room	C.	Over the glove box

D. Left side of engine room
E. Behind of front bumper center
F. Right side of engine room
G. Right side of engine room
H. Lower left side of rear seat

INFORMATION DISPLAY : Component Description

INFOID:0000000004504271

Unit	Description
Combination meter	Controls the information display according to the signal received from each unit.
Fuel level sensor unit	Refer to MWI-43, "Description".
ECM	Transmits the following signals to the combination meter via CAN communication line. • Engine speed signal • Engine coolant temperature signal • Fuel consumption monitor signal
ABS actuator and electric unit (control unit)	Transmits the vehicle speed signal to the combination meter via CAN communication line.
BCM	Transmits signals provided by various units to the combination meter via CAN communication line.
Ambient sensor	Detects the ambient temperature and transmits the ambient sensor signal to the combination meter.

COMPASS

Description

INFOID:0000000004504272

DISCRIPTION

- This electronic compass is able to display 8 primary directions: N, NE, E, SE, S, SW, W, NW.
- The compass switch (1) is used to operate the compass.

Switch Operation

Press	Compass is turned ON/OFF
Press and hold (for 3- 9 sec.)	Compass display (2) turns to zone variation change mode Compass
Press and hold (for more than 9 sec.)	Compass display turns to calibration mode

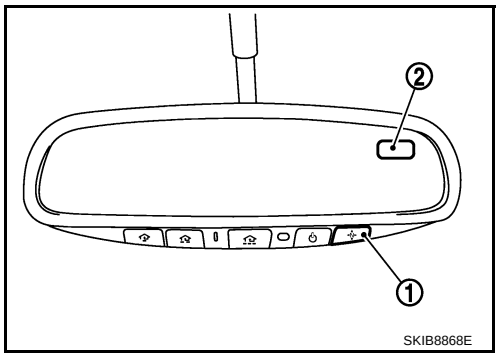

- All standard compasses determine direction relative to Magnetic North; however, this electronic compass is designed to display direction relative to True North.
- The difference between Magnetic North and True North varies from place to place across the surface of the earth.
- This electronic compass must be “told” approximately where it is on the earth’s surface so that the Magnetic North reading can be properly converted into a True North display.
- To tell the electronic compass where it’s at, the earth is separated into numbered “Zone Variances”. The Zone Variance number in which the compass is to function must be entered into this electronic compass.
- Each zone is magnetically about 4.2° wide. Typically, anything under 22.5° total zone change is not noticed on the electronic compass display. However, over 22.5°, a reading may be off by one or more primary directions.
- On long trips, a vehicle may leave its original zone and enter one or more new zones. Generally, you do not need to reset the compass zone if you travel between 3 or 4 zones, such as business travel or vacation. The typical driver will not notice any difference on the display within 3 or 4 zones. However, if the vehicle is “permanently” moved to a new location, it is recommended that the compass zone be reset.

ZONE VARIATION SETTING PROCEDURE

1. Press and hold the compass switch for 3 – 9 seconds.
2. The current zone setting appears on the compass display.
3. Find the current geographical location number in the Zone Variation Chart.
4. Select the new zone number. (Press the compass switch until the new zone number appears on the compass display.)
5. After select the new zone number, the compass display will automatically shows a direction within a few seconds.
6. Perform the following Calibration Procedure for more accurate indications.

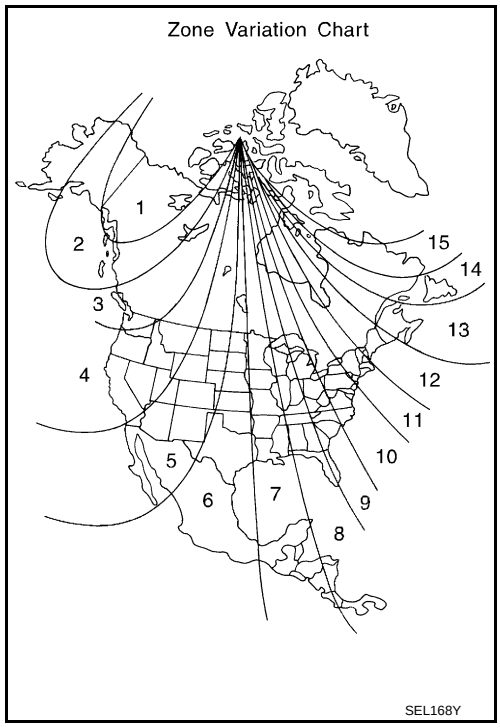

CALIBRATION PROCEDURE

NOTE:
The compass calibrates itself under normal driving conditions. However, occasional circumstances may cause the compass to operate inaccurately. Example: Driving from rural (wide open) areas to crowded city areas, or if an aftermarket (i.e., non original equipment) antenna with a magnetic base is attached to the vehicle. Calibrate the mirror compass if the display shows only one direction or a limited number of directions.

NOTE:
- If “magnetic hats” are used in the dealership for vehicle identification, remove the hat from the vehicle before performing the following steps. Do not put the hat back on the vehicle after the procedure is completed.
- Drive the vehicle to an open level area; away from large metallic objects, structures, and overhead power lines.
- Turn off “non-essential” electrical accessories (rear window defrost, heater/air conditioning, wipers) and close the doors.

1. Verify the correct compass zone setting for the geographical location.
2. Press and hold the compass switch for more than 9 seconds.
3. “C” is displayed on the compass display, when calibration starts.
4. Drive slowly [less than 8 km/h (5 MPH)] in a circle until the “C / CAL” is replaced with primary headings (N, NE, E, SE, S, SW, W, or NW).
   NOTE:
   This will require driving at least 2 complete 360 degree circles; 3 complete circles may be required.
5. The compass calibration procedure is now complete. The compass should operate normally.
   NOTE:
   If at any time the compass continually displays the incorrect direction or the reading is erratic or locked, repeat the calibration procedure.

Component Parts Location

INFOID:0000000004504273

1 : Compass switch
2 : Compass display

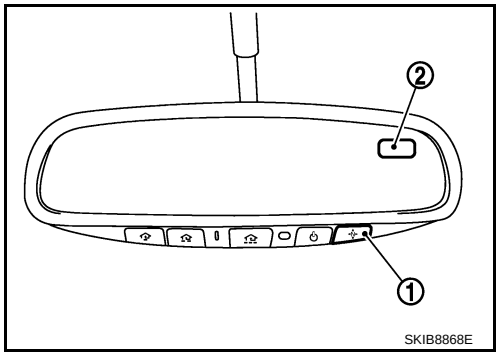

Special Repair Requirement

INFOID:0000000004504274

1. PERFORM ZONE VARIATION SETTING

Perform the zone variation setting. Refer to MWI-30, "Description".

>> GO TO 2.

2. PERFORM CALIBRATION

Perform the calibration. Refer to MWI-30, "Description".

>> Setting completion

DIAGNOSIS SYSTEM (METER)

Diagnosis Description

INFOID:0000000004504275

ON BOARD DIAGNOSIS

- Information display LCD segment operation can be checked in on board diagnosis mode.
- On board diagnosis can check for the continuity between meter control circuit and each meter (speedometer and tachometer).

START-UP PROCEDURE OF ON BOARD DIAGNOSIS

1. Turn the ignition switch ON.
2. Turn the ignition switch OFF after setting the display to “trip A” or “trip B” with the odo/trip meter switch (1).
3. Turn the ignition switch to ON while pressing the illumination control switch (2).
4. Press the illumination control switch at least 3 times (Within 7 seconds after the ignition switch is turned ON).

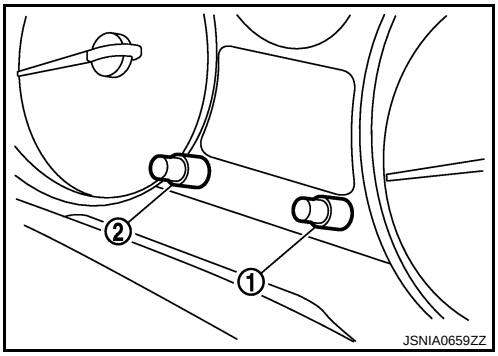

5. Illuminates all segments in the information display. At this time, the combination meter is turned to on board diagnosis mode.
   NOTE:
   - Check combination meter power supply and ground circuits when on board diagnosis mode of combination meter does not start. Replace combination meter if the circuits are normal.
   - If any of the segments is not displayed, replace combination meter.

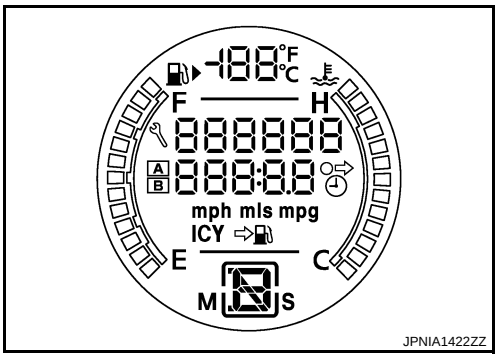

6. Each meter activates during pressing illumination control switch.

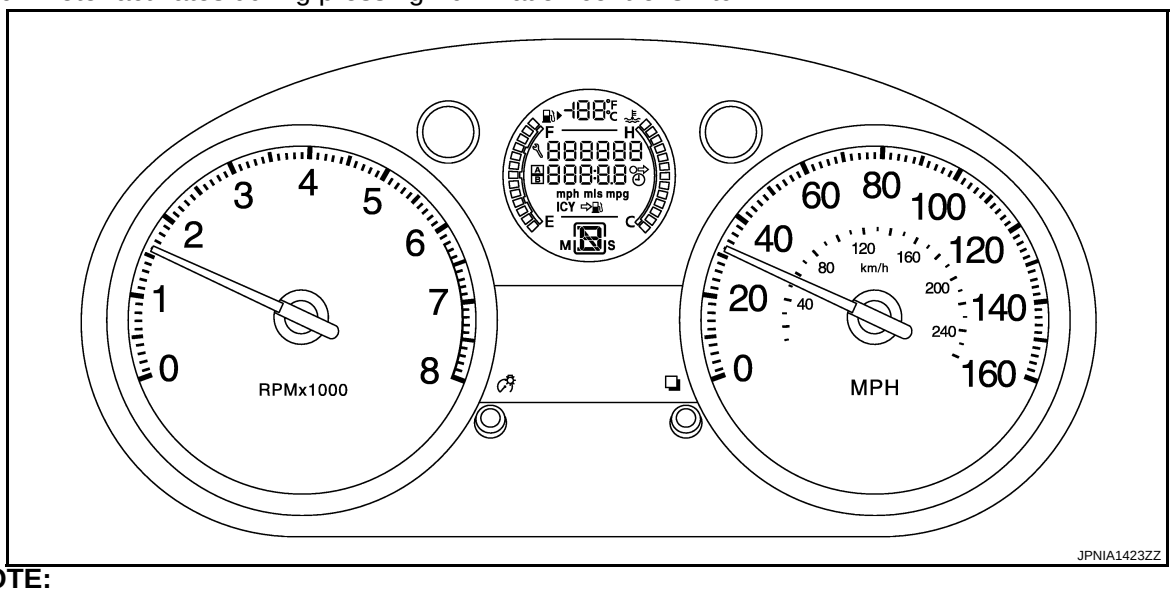

NOTE:
Check the combination meter power supply and the ground circuit if the on board diagnosis does not start. Refer to MWI-41, "COMBINATION METER : Diagnosis Procedure".

CONSULT-III Function (METER/M&A)

INFOID:0000000004504276

CONSULT-III FUNCTION (METER/M&A)

System	Diagnosis mode	Description
METER/M&A	Self Diagnostic Result	Combination meter checks the conditions and displays memorized error.
	Data Monitor	Displays combination meter input/output data in real time.

SELF DIAGNOSTIC RESULT

Refer to MWI-68, "DTC Index".

DATA MONITOR

Display Item List

X: Applicable

Display item [Unit]	MAIN SIGNALS	Description
SPEED METER [km/h]	X	Value of vehicle speed signal received from ABS actuator and electric unit (control unit) with CAN communication line. **NOTE:** 655.35 is displayed when the malfunction signal is received.
SPEED OUTPUT [km/h]	X	Vehicle speed signal value transmitted to other units with CAN communication line. **NOTE:** 655.35 is displayed when the malfunction signal is received.
ODO OUTPUT [km/h or mph]		Odometer signal value transmitted to other units with CAN communication line.
TACHO METER [rpm]	X	Value of the engine speed signal received from ECM with CAN communication line. **NOTE:** 8191.875 is displayed when the malfunction signal is received.
FUEL METER [lit.]	X	Fuel level indicated on combination meter.
W TEMP METER [°C]	X	Value of engine coolant temperature signal received from ECM with CAN communication line. **NOTE:** 215 is displayed when the malfunction signal is input.
INST FUEL [km/L]		This item is displayed, but cannot be monitored.
ABS W/L [On/Off]		Status of ABS warning lamp judged from ABS warning lamp signal received from ABS actuator and electric unit (control unit) with CAN communication line.
VDC/TCS IND [On/Off]		Status of VDC OFF indicator lamp judged from VDC OFF indicator lamp signal received from ABS actuator and electric unit (control unit) with CAN communication line.
SLIP IND [On/Off]		Status of slip indicator lamp judged from slip indicator lamp signal received from ABS actuator and electric unit (control unit) with CAN communication line.
BRAKE W/L [On/Off]		Status of brake warning lamp judged from brake warning lamp signal received from ABS actuator and electric unit (control unit) with CAN communication line. **NOTE:** Displays “Off” if the brake warning lamp is illuminated when the valve check starts, the parking brake switch is turned ON or the brake fluid level switch is turned ON.
DOOR W/L [On/Off]		Status of door warning lamp judged from door switch signal received from BCM with CAN communication line.
HI -BEAM IND [On/Off]		Status of high beam indicator lamp judged from high beam request signal received from BCM with CAN communication line.
TURN IND [On/Off]		Status of turn indicator lamp judged from turn indicator signal received from BCM with CAN communication line.

Display item [Unit]	MAIN SIGNALS	Description
LIGHT IND [On/Off]		Status of light indicator lamp judged from position light request signal received from BCM with CAN communication line.
OIL W/L [On/Off]		Status of oil pressure warning lamp judged from oil pressure switch signal received from IPDM E/R with CAN communication line.
MIL [On/Off]		Status of malfunction indicator lamp judged from malfunctioning indicator lamp signal received from ECM with CAN communication line.
CRUISE IND [On/Off]		Status of CRUISE indicator judged from ASCD CRUISE lamp signal received from ECM with CAN communication line.
SET IND [On/Off]		Status of set indicator judged from ASCD SET indicator signal received from ECM with CAN communication line.
O/D OFF IND [On/Off]		Status of O/D OFF indicator lamp judged from OD switch signal received from OD control switch.
4WD W/L [On/Off]		Status of AWD warning lamp judged from AWD warning lamp signal received from AWD control unit with CAN communication line.
4WD LOCK IND [On/Off]		Status of AWD lock indicator judged from AWD signal received from AWD control unit with the CAN communication line.
FUEL W/L [On/Off]		Status of Low-fuel warning lamp judged from identified fuel level.
AIR PRESS W/L [On/Off]		Status of low tire pressure warning lamp judged from the tire pressure signal received from BCM with CAN communication line.
KEY G/Y W/L [On/Off]		Status of key warning lamp (G) judged from key warning signal received from Intelligent Key unit with CAN communication line.
KEY R W/L [On/Off]		Status of key warning lamp (R) judged from key warning signal received from Intelligent Key unit with CAN communication line.
KEY KNOB W/L [On/Off]		Status of Key knob switch received from Intelligent Key unit with the CAN communication line.
EPS W/L [On/Off]		Status of EPS warning lamp judged from EPS warning lamp signal received from EPS control unit with the CAN communication line.
CHAGE W/L [On/Off]		Status of charge warning lamp judged from alternator signal received from alternator.
SHIFT IND [P/ R/ N/ D/ M1/ M2/ M3/ M4/ M5/ M6]		Status of shift position indicator judged from shift position signal and manual mode indicator signal received from TCM with CAN communication line.
4WD IND [AUTO/LOCK/2W/4Lo/HL1/HL2/ MALF]		This item is displayed, but cannot be monitored.
O/D OFF SW [On/Off]		Status of OD control switch.
M RANGE SW [On/Off]		Status of mode select switch (manual).
NM RANGE SW [On/Off]		Status of mode select switch (auto).
AT SFT UP SW [On/Off]		Status of position select switch (up).
AT SFT DWN SW [On/Off]		Status of position select switch (down).
ST SFT UP SW [On/Off]		Status of paddle shifter up switch.
ST SFT DWN SW [On/Off]		Status of paddle shifter down switch.
PKB SW [On/Off]		Status of parking brake switch.

Display item [Unit]	MAIN SIGNALS	Description
BUCKLE SW [On/Off]		Status of seat belt buckle switch (driver side).
BRAKE OIL SW [On/Off]		Status of brake fluid level switch.
DISTANCE [km]		Value of possible driving distance calculated by combination meter.
OUTSIDE TEMP [°C or °F]		Ambient temperature value converted from ambient sensor signal received from ambient sensor. **NOTE:** This may not match with the temperature value indicated on the information display. (Because the information display value is a corrected value from the ambient sensor input value.)
FUEL LOW SIG [On/Off]		Status of fuel level low warning signal to output to AV control unit with CAN communication line.
BUZZER [On/Off]	X	Buzzer status (in the combination meter) judged with the buzzer output signal received from BCM via CAN communication and the warning output condition of the combination meter.

NOTE:

Some items are not available according to vehicle specification.

COMPONENT DIAGNOSIS

U1000 CAN COMM CIRCUIT

Description

INFOID:0000000004504277

CAN (Controller Area Network) is a serial communication line for real time application. It is an on-vehicle multiplex communication line with high data communication speed and excellent error detection ability. Many electronic control units are equipped onto a vehicle, and each control unit shares information and links with other control units during operation (not independent). In CAN communication, control units are connected with 2 communication lines (CAN-H line, CAN-L line) allowing a high rate of information transmission with less wiring. Each control unit transmits/receives data but selectively reads required data only.
Refer to LAN-24, "CAN Communication Signal Chart".

DTC Logic

INFOID:0000000004504278

DTC DETECTION LOGIC

DTC	Display contents of CONSULT-III	Diagnostic item is detected when ...	Probable malfunction location
U1000	CAN COMM CIRCUIT	When combination meter is not transmitting or receiving CAN communication signal for 2 seconds or more.	CAN communication system

Diagnosis Procedure

INFOID:0000000004504279

1. PERFORM SELF-DIAGNOSIS OF COMBINATION METER

1. Turn ignition switch ON and wait for 2 seconds or more.
2. Perform “Self Diagnostic Result” of “METER/M&A”.

Is “CAN COMM CIRCUIT” displayed?

YES >> Refer to LAN-15, "Trouble Diagnosis Flow Chart".
NO >> Refer to GI-41, "Intermittent Incident".

U1010 CONTROL UNIT (CAN)

Description

INFOID:0000000004504280

Initial diagnosis of combination meter.

DTC Logic

INFOID:0000000004504281

DTC DETECTION LOGIC

DTC	Display contents of CONSULT-III	Diagnostic item is detected when ...	Probable malfunction location
U1010	CONTROL UNIT (CAN)	Any malfunction is detected during initial diagnosis of combination meter CAN controller.	Combination meter

Diagnosis Procedure

INFOID:0000000004504282

1. REPLACE COMBINATION METER

When DTC “U1010” is detected, replace combination meter.

>> INSPECTION END

B2205 VEHICLE SPEED

Description

INFOID:0000000004504283

Vehicle speed signal is transmitted from ABS actuator and electric unit (control unit) via CAN communication line to combination meter.

DTC Logic

INFOID:0000000004504284

DTC DETECTION LOGIC

DTC	Display contents of CONSULT-III	Diagnostic item is detected when ...	Probable malfunction location
B2205	VEHICLE SPEED	The abnormal vehicle speed signal is input from ABS actuator and electric unit (control unit) for 2 seconds or more.	• Wheel sensor • ABS actuator and electric unit (control unit)

Diagnosis Procedure

INFOID:0000000004504285

1. PERFORM SELF DIAGNOSIS OF ABS ACTUATOR AND ELECTRIC UNIT (CONTROL UNIT)

Perform “Self Diagnostic Result” of ABS actuator and electric unit (control unit), and repair or replace malfunctioning parts.

>> • BRC-15, "CONSULT-III Function" (Without VDC system)
• BRC-93, "CONSULT-III Function" (With VDC system)

B2267 ENGINE SPEED

Description

INFOID:0000000004504286

The engine speed signal is transmitted from ECM to the combination meter with CAN communication.

DTC Logic

INFOID:0000000004504287

DTC DETECTION LOGIC

DTC	Display contents of CONSULT-III	Diagnostic item is detected when ...	Probable malfunction location
B2267	ENGINE SPEED	ECM continuously transmits abnormal engine speed signals for 2 seconds or more.	• Crankshaft position sensor • ECM

Diagnosis Procedure

INFOID:0000000004504288

1. PERFORM SELF DIAGNOSIS OF ECM

Perform “Self Diagnostic Result” of ECM, and repair or replace malfunctioning parts.

>> • EC-105, "CONSULT-III Function" for California
• EC-576, "CONSULT-III Function" for USA (Federal) and Canada
• EC-1003, "CONSULT-III Function" for Mexico

B2268 WATER TEMP

Description

INFOID:0000000004504289

The engine coolant temperature signal is transmitted from ECM to the combination meter via CAN communication.

DTC Logic

INFOID:0000000004504290

DTC DETECTION LOGIC

DTC	Display contents of CONSULT-III	Diagnostic item is detected when ...	Probable malfunction location
B2268	WATER TEMP	ECM continuously transmits abnormal engine coolant temperature signals for 60 seconds or more.	• Engine coolant temperature sensor • ECM

Diagnosis Procedure

INFOID:0000000004504291

1. PERFORM SELF DIAGNOSIS OF ECM

Perform “Self Diagnostic Result” of ECM, and repair or replace malfunctioning parts.

>> • EC-105, "CONSULT-III Function" for California
• EC-576, "CONSULT-III Function" for USA (Federal) and Canada
• EC-1003, "CONSULT-III Function" for Mexico

POWER SUPPLY AND GROUND CIRCUIT
COMBINATION METER

COMBINATION METER : Diagnosis Procedure

INFOID:0000000004504292

1.CHECK FUSE

Check for blown fuses.

Signal name	Fuses No.
Battery power supply	9
Ignition signal	3

Is the inspection result normal?

YES >> GO TO 2.
NO >> Be sure to eliminate cause of malfunction before installing new fuse.

2.CHECK POWER SUPPLY CIRCUIT

Check voltage between combination meter harness connector terminal and ground.

Terminals			Ignition switch position	
(+)		(–)		
Combination meter			OFF	ON
Connector	Terminal			
M34	1	Ground	Battery voltage	Battery voltage
	2		Approx. 0 V	Battery voltage

Is the inspection result normal?

YES >> GO TO 3.
NO >> Check harness between combination meter and fuse.

3.CHECK GROUND CIRCUIT

1. Turn ignition switch OFF.
2. Disconnect combination meter connector.
3. Check continuity between combination meter harness connector terminal and ground.

Combination meter		Ground	Continuity
Connector	Terminal		
M34	3		Existed
	23		

Is the inspection result normal?

YES >> INSPECTION END
NO >> Repair harness or connector.

IPDM E/R (INTELLIGENT POWER DISTRIBUTION MODULE ENGINE ROOM)

IPDM E/R (INTELLIGENT POWER DISTRIBUTION MODULE ENGINE ROOM) : Diagnosis Procedure

INFOID:0000000004553952

1.CHECK FUSIBLE LINK

Check that the following IPDM E/R fusible link is not blown.

Signal name	Fusible link No.
Battery power supply	C
	E
	K

Is the fusible link fusing?

YES >> Replace the blown fusible link after repairing the affected circuit if a fusible link is blown.
NO >> GO TO 2.

2. CHECK POWER SUPPLY CIRCUIT

1. Turn the ignition switch OFF.
2. Disconnect IPDM E/R connectors.
3. Check voltage between IPDM E/R harness connectors and the ground.

Terminals			Voltage (Approx.)
(+)		(–)	
IPDM E/R			
Connector	Terminal	Ground	
E9	1		Battery voltage
	2		
E10	6		

Is the measurement value normal?

YES >> GO TO 3.
NO >> Repair the harness or connector.

3. CHECK GROUND CIRCUIT

Check continuity between IPDM E/R harness connectors and the ground.

IPDM E/R		Ground	Continuity
Connector	Terminal		
E11	11		Exist
E13	25		

Does continuity exist?

YES >> INSPECTION END
NO >> Repair the harness or connector.

FUEL LEVEL SENSOR SIGNAL CIRCUIT

Description

INFOID:0000000004504294

The fuel level sensor unit and fuel level pump (fuel level sensor) detect the fuel level in the fuel tank and transmit the fuel level sensor signal to the combination meter.

Component Function Check

INFOID:0000000004504295

1. CHECK COMBINATION METER INPUT SIGNAL

1. Connect the CONSULT-III.
2. Select the “Data Monitor” for the “METER/M&A” and compare the “FUEL METER” monitor value with the fuel gauge reading on the combination meter.

Fuel gauge indication position (segment illumination position)	Monitor value [lit]
13/13	Approx. 57 - 61
10/13	Approx. 44 - 49
7/13	Approx. 31 - 35
4/13	Approx. 17 - 21
0/13	Approx. 0 - 3

Does monitor value match fuel gauge reading?

YES >> INSPECTION END
NO >> Replace combination meter.

Diagnosis Procedure

INFOID:0000000004504296

1. CHECK COMBINATION METER INPUT SIGNAL

1. Turn ignition switch ON.
2. Check voltage between combination meter harness connector terminal and ground.

Terminal			Voltage (Approx.)
(+)		(–)	
Combination meter			
Connector	Terminal		
M34	34	Ground	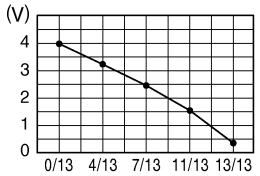 JSNIA0423GB

Does it match fuel gauge reading?

YES >> GO TO 2.
NO >> Replace the combination meter.

2. CHECK FUEL LEVEL SENSOR CIRCUIT

1. Turn ignition switch OFF.
2. Disconnect combination meter connector and fuel level sensor unit and fuel pump (fuel level sensor) connector.
3. Check continuity between combination meter harness connector terminal and fuel level sensor unit and fuel pump (fuel level sensor) harness connector terminal.

Combination meter		Fuel level sensor unit and fuel pump (fuel level sensor)		Continuity
Connector	Terminal	Connector	Terminal	
M34	34	B40	4	Existed

4. Check continuity between combination meter harness connector terminal and ground.

Combination meter		Ground	Continuity
Connector	Terminal		
M34	34		Not existed

Is the inspection result normal?

YES >> GO TO 3.
NO >> Repair harness or connector.

3. CHECK FUEL LEVEL SENSOR GROUND CIRCUIT

Check continuity between fuel level sensor unit and fuel pump (fuel level sensor) harness connector terminal and combination meter harness connector terminal.

Fuel level sensor unit and fuel pump (fuel level sensor)		Combination meter		Continuity
Connector	Terminal	Connector	Terminal	
B40	1	M34	24	Existed

Is the inspection result normal?

YES >> INSPECTION END
NO >> Repair harness or connector.

Component Inspection [Fuel Level Sensor Unit And Fuel Pump (Fuel Level Sensor)]

INFOID:0000000004504297

2WD MODELS (EXCEPT FOR MEXICO)

1. CHECK FUEL LEVEL SENSOR UNIT AND FUEL PUMP (FUEL LEVEL SENSOR)

Check the resistance between fuel level sensor unit and fuel pump (fuel level sensor).

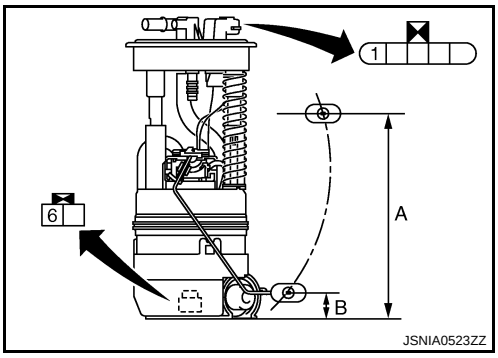

Terminal		Float position	Resistance (Ω)
1	6	Full (A)	Approx. 5.0
		Empty (B)	Approx. 81.5

Standard float position

Float position	Position [mm (in)]
Full	Approx. 196.2 (7.72)
Empty	Approx. 17.3 (0.68)

Is inspection result OK?

YES >> INSPECTION END
NO >> Replace fuel level sensor unit (main).

AWD MODELS (EXCEPT FOR MEXICO)

1. CHECK FUEL LEVEL SENSOR UNIT AND FUEL PUMP (FUEL LEVEL SENSOR)

Check the resistance between fuel level sensor unit and fuel pump (fuel level sensor).

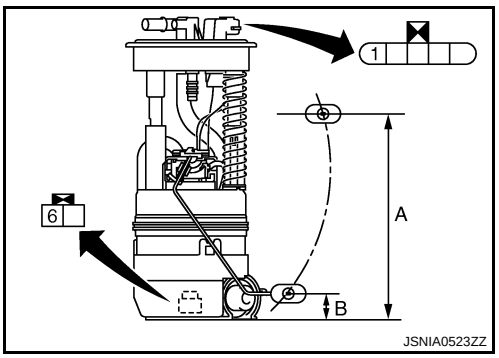

Terminal		Float position	Resistance (Ω)
1	6	Full (A)	Approx. 2.5
		Empty (B)	Approx. 76.2

Standard float position

Float position	Position [mm (in)]
Full	Approx. 190 (7.48)
Empty	Approx. 28 (1.10)

Is inspection result OK?

YES >> INSPECTION END
NO >> Replace fuel level sensor unit (main).

FOR MEXICO MODELS

1. CHECK FUEL LEVEL SENSOR UNIT AND FUEL PUMP (FUEL LEVEL SENSOR)

Check the resistance between fuel level sensor unit and fuel pump (fuel level sensor).

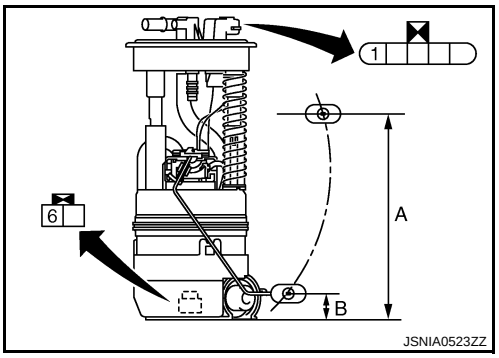

Terminal		Float position	Resistance (Ω)
1	6	Full (A)	Approx. 2.5
		Empty (B)	Approx. 79.0

Standard float position

Float position	Position [mm (in)]
Full	Approx. 190 (7.48)
Empty	Approx. 20 (0.79)

Is inspection result OK?

YES >> INSPECTION END
NO >> Replace fuel level sensor unit (main).

Component Inspection [Fuel Level Sensor Unit (Sub)]

INFOID:0000000004504298

AWD MODELS (EXCEPT FOR MEXICO)

1. CHECK FUEL LEVEL SENSOR UNIT (SUB)

Inspect the resistance of fuel level sensor unit (sub).

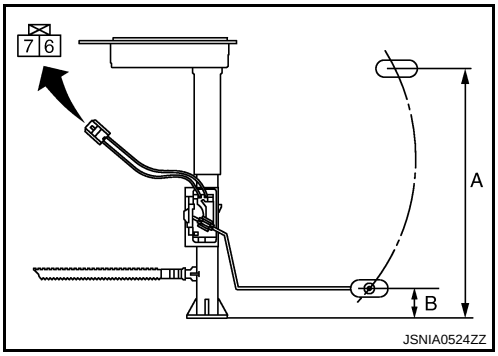

Terminal		Float position	Resistance (Ω)
6	7	Full (A)	Approx. 2.5
		Empty (B)	Approx. 46.1

Standard float position

Float position	Position [mm (in)]
Full	Approx. 211.5 (8.33)
Empty	Approx. 30.2 (1.19)

Is inspection result OK?

YES >> INSPECTION END
NO >> Replace fuel level sensor unit (sub).

FOR MEXICO MODELS

1. CHECK FUEL LEVEL SENSOR UNIT (SUB)

Inspect the resistance of fuel level sensor unit (sub).

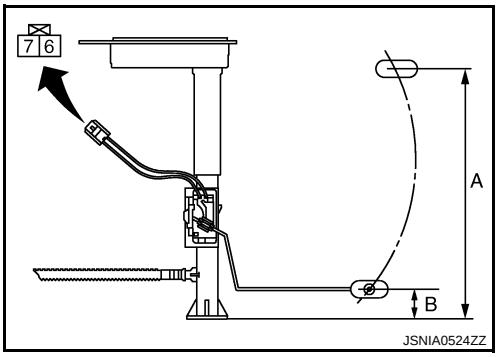

Terminal		Float position	Resistance (Ω)
6	7	Full (A)	Approx. 2.5
		Empty (B)	Approx. 47.0

Standard float position

Float position	Position [mm (in)]
Full	Approx. 221.8 (8.73)
Empty	Approx. 31.2 (1.23)

Is inspection result OK?

YES >> INSPECTION END
NO >> Replace fuel level sensor unit (sub).

OIL PRESSURE SWITCH SIGNAL CIRCUIT

Description

INFOID:0000000004504299

Detects the engine oil pressure and transmits the oil pressure switch signal to IPDM E/R.

Component Function Check

INFOID:0000000004504300

1. CHECK COMBINATION METER INPUT SIGNAL

Select the “Data Monitor” for the “METER/M&A” and check the “OIL W/L” monitor value.

“OIL W/L”
Ignition switch ON : On
Engine running : Off

>> INSPECTION END

Diagnosis Procedure

INFOID:0000000004504301

1. CHECK OIL PRESSURE SWITCH CIRCUIT

1. Turn ignition switch OFF.
2. Disconnect IPDM E/R connector and oil pressure switch connector.
3. Check continuity between IPDM E/R harness connector terminal and oil pressure switch harness connector terminal.

IPDM E/R		Oil pressure switch		Continuity
Connector	Terminal	Connector	Terminal	
E13	23	F63	1	Existed

4. Check continuity between IPDM E/R harness connector terminal and ground.

Combination meter		Ground	Continuity
Connector	Terminal		
E13	23		Not existed

Is the inspection result normal?

YES >> INSPECTION END
NO >> Repair harness or connector.

Component Inspection

INFOID:0000000004504302

1. CHECK OIL PRESSURE SWITCH UNIT

Check continuity between oil pressure switch and ground.

Condition	Continuity
Engine stopped	Yes
Engine running	No

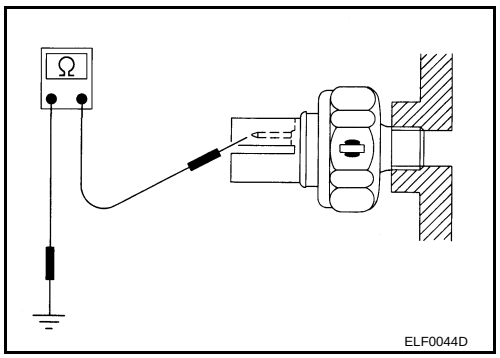

Is the inspection result normal?

YES >> INSPECTION END

NO >> Replace the oil pressure switch.

AMBIENT SENSOR SIGNAL CIRCUIT

Description

INFOID:0000000004504303

The ambient sensor is attached on the radiator core support. It detects ambient temperature and converts it into a resistance value which is then input into the combination meter.

Diagnosis Procedure

INFOID:0000000004504304

1. CHECK AMBIENT SENSOR CIRCUIT

1. Turn ignition switch OFF.
2. Disconnect combination meter connector and ambient sensor connector.
3. Check continuity between combination meter harness connector terminal and ambient sensor harness connector terminal.

Combination meter		Ambient sensor		Continuity
Connector	Terminal	Connector	Terminal	
M34	19	E44	1	Existed

4. Check continuity between combination meter harness connector terminal and ground.

Combination meter		Ground	Continuity
Connector	Terminal		
M34	19		Not existed

Is the inspection result normal?

YES >> GO TO 2.
NO >> Repair harness or connector.

2. CHECK AMBIENT SENSOR GROUND CIRCUIT

1. Check continuity between combination meter harness connector terminal and ambient sensor harness connector terminal.

Combination meter		Ambient sensor		Continuity
Connector	Terminal	Connector	Terminal	
M34	20	E44	2	Existed

2. Check continuity between combination meter harness connector terminal and ground.

Combination meter		Ground	Continuity
Connector	Terminal		
M34	20		Not existed

Is the inspection result normal?

YES >> INSPECTION END
NO >> Repair harness or connector.

Component Inspection

INFOID:0000000004504305

1. CHECK AMBIENT SENSOR

Check resistance between ambient sensor terminals 1 and 2.

Temperature [°C (°F)]	Resistance (kΩ)
–10 (14)	Approx. 10
0 (32)	Approx. 6.2
10 (50)	Approx. 4.0

Temperature [°C (°F)]	Resistance (kΩ)
20 (68)	Approx. 2.6
30 (86)	Approx. 1.8
40 (104)	Approx. 1.3

Is the inspection result normal?

YES >> INSPECTION END
NO >> Replace ambient sensor.

COMPASS

Wiring Diagram - COMPASS -

INFOID:0000000004504306

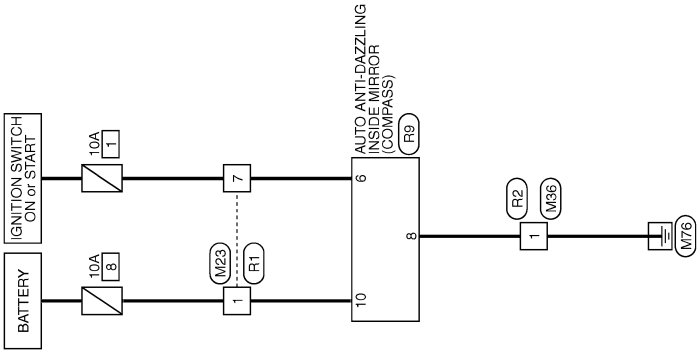

COMPASS

2008/07/15

JCNWM1631GI

COMPASS

Connector No.	M23
Connector Name	WIRE TO WIRE
Connector Type	TH12FW-NH

H.S.

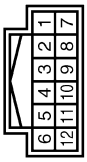

Terminal No.	Color of Wire	Signal Name [Specification]
1	LG	–
7	P	–

Connector No.	M36
Connector Name	WIRE TO WIRE
Connector Type	NS06FBR-CS

H.S.

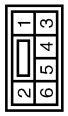

Terminal No.	Color of Wire	Signal Name [Specification]
1	B	–

Connector No.	R1
Connector Name	WIRE TO WIRE
Connector Type	TH12MW-NH

H.S.

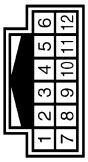

Terminal No.	Color of Wire	Signal Name [Specification]
1	B/Y	–
7	B/R	–

Connector No.	R2
Connector Name	WIRE TO WIRE
Connector Type	NS06MBR-CS

H.S.

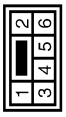

Terminal No.	Color of Wire	Signal Name [Specification]
1	B	–

Connector No.	R9
Connector Name	AUTO ANTI-DAZZLING INSIDE MIRROR
Connector Type	TH10FB-NH

H.S.

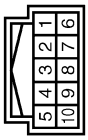

Terminal No.	Color of Wire	Signal Name [Specification]
6	B/R	–
8	B	–
10	B/Y	–

JCNWM1632GI

ECU DIAGNOSIS

COMBINATION METER

Reference Value

INFOID:0000000004504307

VALUES ON THE DIAGNOSIS TOOL

Monitor Item	Condition		Value/Status
SPEED METER [km/h]	Ignition switch ON	While driving	Equivalent to speedometer reading **NOTE:** 655.35 is displayed when the malfunction signal is received
SPEED OUTPUT [km/h]	Ignition switch ON	While driving	Equivalent to speedometer reading **NOTE:** 655.35 is displayed when the malfunction signal is received
ODO OUTPUT	Ignition switch ON	—	Equivalent to odometer reading in combination meter
TACHO METER [rpm]	Ignition switch ON	While driving	Equivalent to tachometer reading **NOTE:** 8191.875 is displayed when the malfunction signal is received
FUEL METER [lit]	Ignition switch ON	—	Values according to fuel level
W TEMP METER [°C]	Ignition switch ON	—	Values according to engine coolant temperature **NOTE:** 215 is displayed when the malfunction signal is input
INST FUEL [km/l]	Ignition switch ON	**NOTE:** This item is displayed, but cannot be monitored.	—
ABS W/L	Ignition switch ON	ABS warning lamp ON	On
		ABS warning lamp OFF	Off
VDC/TCS IND	Ignition switch ON	VDC OFF indicator lamp ON	On
		VDC OFF indicator lamp OFF	Off
SLIP IND	Ignition switch ON	SLIP indicator lamp ON	On
		SLIP indicator lamp OFF	Off
BRAKE W/L	Ignition switch ON	Brake warning lamp ON	On
		Brake warning lamp OFF	Off
DOOR W/L	Ignition switch ON	Door warning lamp ON	On
		Door warning lamp OFF	Off
HI-BEAM IND	Ignition switch ON	High beam indicator lamp ON	On
		High beam indicator lamp OFF	Off
TURN IND	Ignition switch ON	Turn signal indicator lamp ON	On
		Turn signal indicator lamp OFF	Off
LIGHT IND	Ignition switch ON	Light indicator lamp ON	On
		Light indicator lamp OFF	Off
OIL W/L	Ignition switch ON	Oil pressure warning lamp ON	On
		Oil pressure warning lamp OFF	Off

Monitor Item	Condition		Value/Status
MIL	Ignition switch ON	Malfunction indicator lamp ON	On
		Malfunction indicator lamp OFF	Off
CRUISE IND	Ignition switch ON	Cruise indicator lamp ON	On
		Cruise indicator lamp OFF	Off
SET IND	Ignition switch ON	SET indicator lamp ON	On
		SET indicator lamp OFF	Off
O/D OFF IND	Ignition switch ON	OD OFF indicator lamp ON	On
		OD OFF indicator lamp OFF	Off
4WD W/L	Ignition switch ON	AWD warning lamp ON	On
		AWD warning lamp OFF	Off
4WD LOCK IND	Ignition switch ON	LOCK indicator lamp ON	On
		LOCK indicator lamp OFF	Off
FUEL W/L	Ignition switch ON	Low-fuel warning lamp ON	On
		Low-fuel warning lamp OFF	Off
AIR PRES W/L	Ignition switch ON	Low tire pressure warning lamp ON	On
		Low tire pressure warning lamp OFF	Off
KEY G/Y W/L	Ignition switch ON	KEY warning lamp (green/yellow) ON	On
		KEY warning lamp (green/yellow) OFF	Off
KEY R W/L	Ignition switch ON	KEY warning lamp (red) ON	On
		KEY warning lamp (red) OFF	Off
KEY KNOB W/L	Ignition switch ON	**NOTE:** This item is displayed, but cannot be monitored.	Off
EPS W/L	Ignition switch ON	EPS warning lamp ON	On
		EPS warning lamp OFF	Off
CHAGE W/L	Ignition switch ON	Chage warning lamp ON	On
		Chage warning lamp OFF	Off
SHIFT IND	Ignition switch ON	Shift position indicator P display	P
		Shift position indicator R display	R
		Shift position indicator N display	N
		Shift position indicator D display	D
		Shift position indicator M1 display	M1
		Shift position indicator M2 display	M2
		Shift position indicator M3 display	M3
		Shift position indicator M4 display	M4
		Shift position indicator M5 display	M5
		Shift position indicator M6 display	M6
4WD IND	Ignition switch ON	**NOTE:** This item is displayed, but cannot be monitored.	—
O/D OFF SW	Ignition switch ON	OD OFF switch pressed	On
		OD OFF switch not pressed	Off
M RANGE SW	Ignition switch ON	Manual mode	On
		Other than the above	Off
NM RANGE SW	Ignition switch ON	Manual mode	Off
		Other than the above	On

Monitor Item	Condition		Value/Status
AT SFT UP SW	Ignition switch ON	Selector lever (+) position	On
		Other than the above	Off
AT SFT DWN SW	Ignition switch ON	Selector lever (–) position	On
		Other than the above	Off
ST SFT UP SW	Ignition switch ON	Paddle shifter up operation	On
		Other than the above	Off
ST SFT DWN SW	Ignition switch ON	Paddle shifter down operation	On
		Other than the above	Off
PKB SW	Ignition switch ON	Parking brake switch ON	On
		Parking brake switch OFF	Off
BUCKLE SW	Ignition switch ON	Seat belt buckle switch ON	On
		Seat belt buckle switch OFF	Off
BRAKE OIL SW	Ignition switch ON	Brake fluid level switch ON	On
		Brake fluid level switch OFF	Off
DISTANCE [km]	Ignition switch ON	—	Possible driving distance calculated by combination meter
OUTSIDE TEMP [°C or °F]	Ignition switch ON	—	Equivalent to ambient air temperature **NOTE:** This may not match the indicated value on the information display.
FUEL LOW SIG	Ignition switch ON	Low-fuel warning displayed	On
		Low-fuel warning not displayed	Off
BUZZER	Ignition switch ON	Buzzer ON	On
		Buzzer OFF	Off

NOTE:
Some items are

TERMINAL LAYOUT

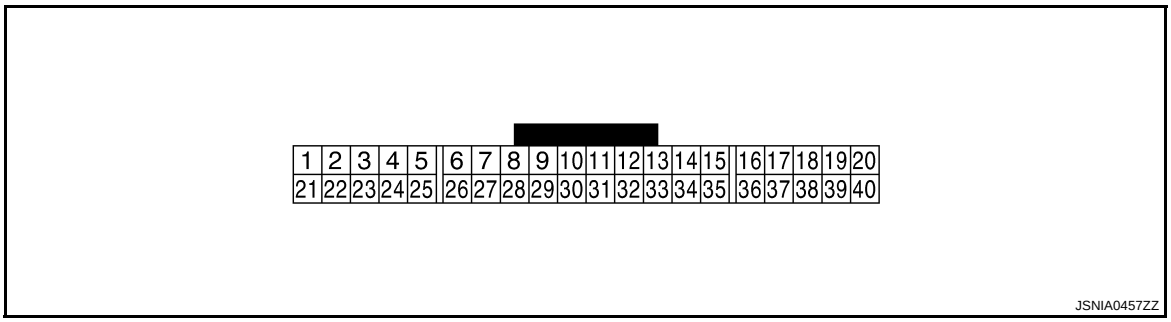

PHYSICAL VALUES

Terminal No. (Wire color)		Description		Condition		Value (Approx.)
+	–	Signal name	Input/ Output			
1 (LG)	Ground	Battery power supply	Input	Ignition switch OFF	—	Battery voltage
2 (O)	Ground	Ignition signal	Input	Ignition switch ON	—	Battery voltage

Terminal No. (Wire color)		Description		Condition		Value (Approx.)
+	–	Signal name	Input/ Output			
3 (B)	Ground	Ground	—	Ignition switch ON	—	0 V
9 (GR)	Ground	O/D OFF switch signal	Input	Ignition switch ON	O/D OFF switch pressed	0 V
					O/D OFF switch not pressed	12 V
12 (G)	Ground	Paddle shifter down signal	Input	Ignition switch ON	Paddle shifter down operation	0 V
					Other than the above	12 V
13 (Y)	Ground	Illumination control signal	Input	Ignition switch ON	Lighting switch ON, then operate the illumination control switch	**NOTE:** When brightness level is midway 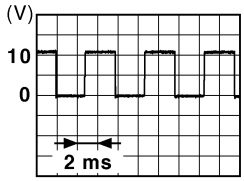 JSNIA0010GB
14 (L)	Ground	Paddle shifter up signal	Input	Ignition switch ON	Paddle shifter up operation	0 V
					Other than the above	5 V
15 (LG)	Ground	Air bag signal	Input	Ignition switch ON	Air bag warning lamp ON	4 V
					Air bag warning lamp OFF	0 V
19 (BR)	Ground	Ambient sensor signal	Input	Ignition switch ON	—	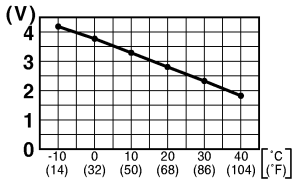 JSNIA0014GB
20 (SB)	Ground	Ambient sensor ground	—	Ignition switch ON	—	0 V
21 (L)	—	CAN-H	—	—	—	—
22 (P)	—	CAN-L	—	—	—	—
23 (B)	Ground	Ground	—	Ignition switch ON	—	0 V
24 (B)	Ground	Fuel level sensor signal ground	—	Ignition switch ON	—	0 V
25 (SB)	Ground	Alternator signal	Input	Ignition switch ON	Charge warning lamp ON	0 V
					Charge warning lamp OFF	12 V
26 (V)	Ground	Parking brake switch signal	Input	Ignition switch ON	Parking brake ON	0 V
					Parking brake OFF	5 V

Terminal No. (Wire color)		Description		Condition		Value (Approx.)
+	–	Signal name	Input/ Output			
27 (BR)	Ground	Brake fluid level switch signal	Input	Ignition switch ON	Brake fluid level is normal	5 V
					Brake fluid level is less than low level	0 V
28 (B)	Ground	Security signal	Input	Ignition switch ON	Security warning lamp ON	0 V
					Security warning lamp OFF	12 V
29 (W)	Ground	Washer level switch signal	Input	Ignition switch ON	Washer level switch ON	0 V
					Washer level switch OFF	12 V
30 (Y)	Ground	Vehicle speed signal (2 pulse)	Output	Ignition switch ON	Vehicle speed is approximately 40 km/h (25 MPH)	**NOTE:** The maximum voltage varies depending on the specification (destination unit). 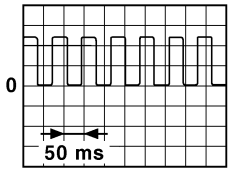 JSNIA0015GB
31 (L)	Ground	Vehicle speed signal (8 pulse)	Output	Ignition switch ON	Vehicle speed is approximately 40 km/h (25 MPH)	**NOTE:** The maximum voltage varies depending on the specification (destination unit). 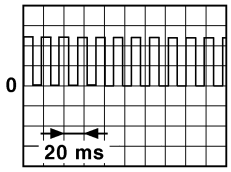 JSNIA0012GB
34 (G)	Ground	Fuel level sensor signal	Input	Ignition switch ON	—	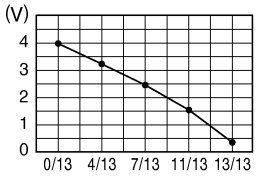 JSNIA0423GB
35 (O)	Ground	Seat belt buckle switch signal (driver side)	Input	Ignition switch ON	When driver seat belt if fastened	12 V
					When driver seat belt is unfastened	0 V
36 (G)	Ground	Seat belt buckle switch signal (passenger side)	Input	Ignition switch ON	• When getting in the passenger seat • When passenger seat belt if fastened	12 V
					• When getting in the passenger seat • When passenger seat belt if unfastened	0 V
37 (P)	Ground	Not manual mode signal	Input	Ignition switch ON	Manual mode	12 V
					Other than the above	0 V

Terminal No. (Wire color)		Description		Condition		Value (Approx.)
+	–	Signal name	Input/ Output			
38 (O)	Ground	Manual mode shift down signal	Input	Ignition switch ON	Selector lever (–) position	0 V
					Other than the above	12 V
39 (V)	Ground	Manual mode shift up signal	Input	Ignition switch ON	Selector lever (+) position	0 V
					Other than the above	12 V
40 (LG)	Ground	Manual mode signal	Input	Ignition switch ON	Manual mode	0 V
					Other than the above	12 V

Wiring Diagram - METER -

INFOID:0000000004504308

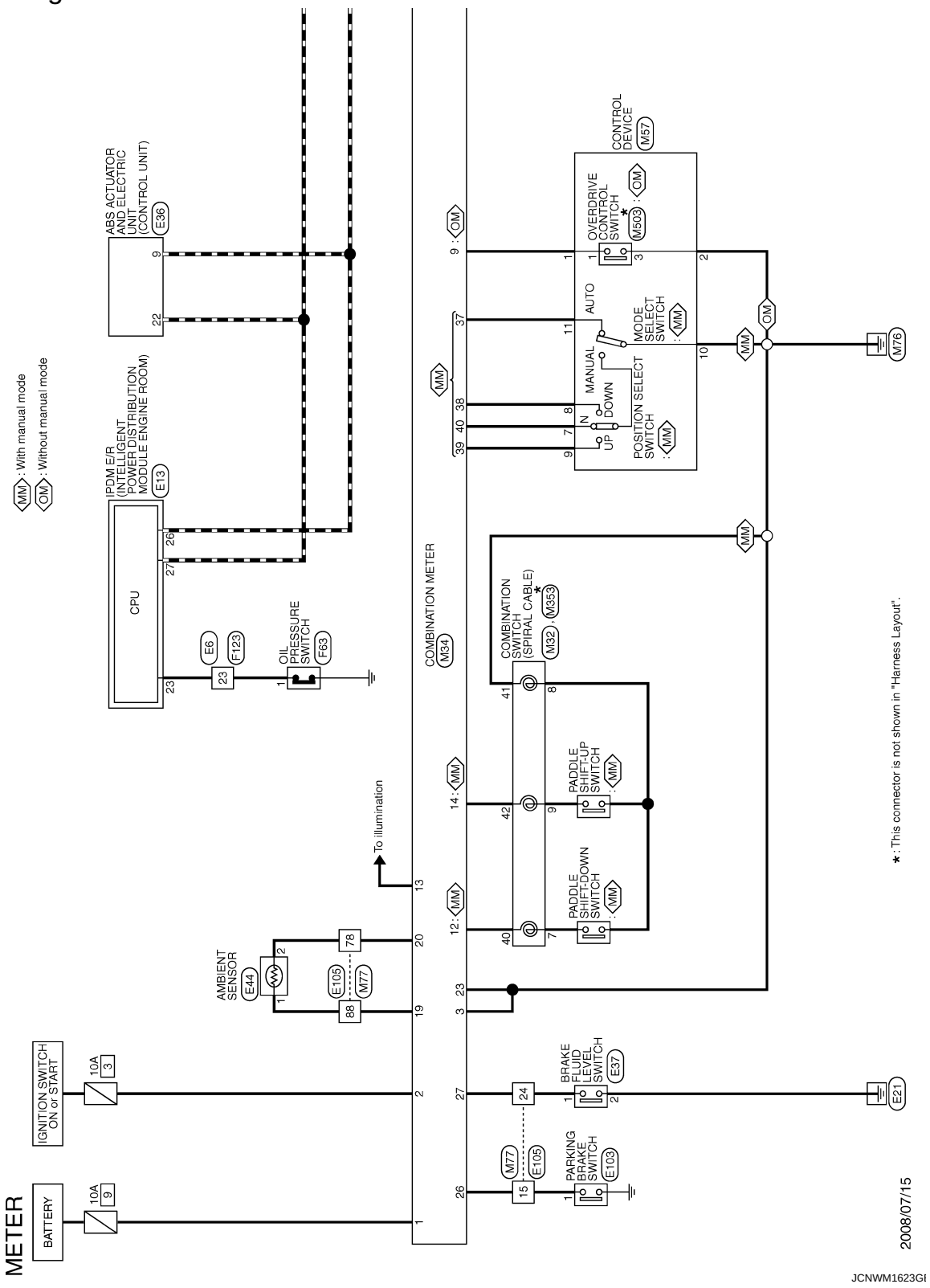

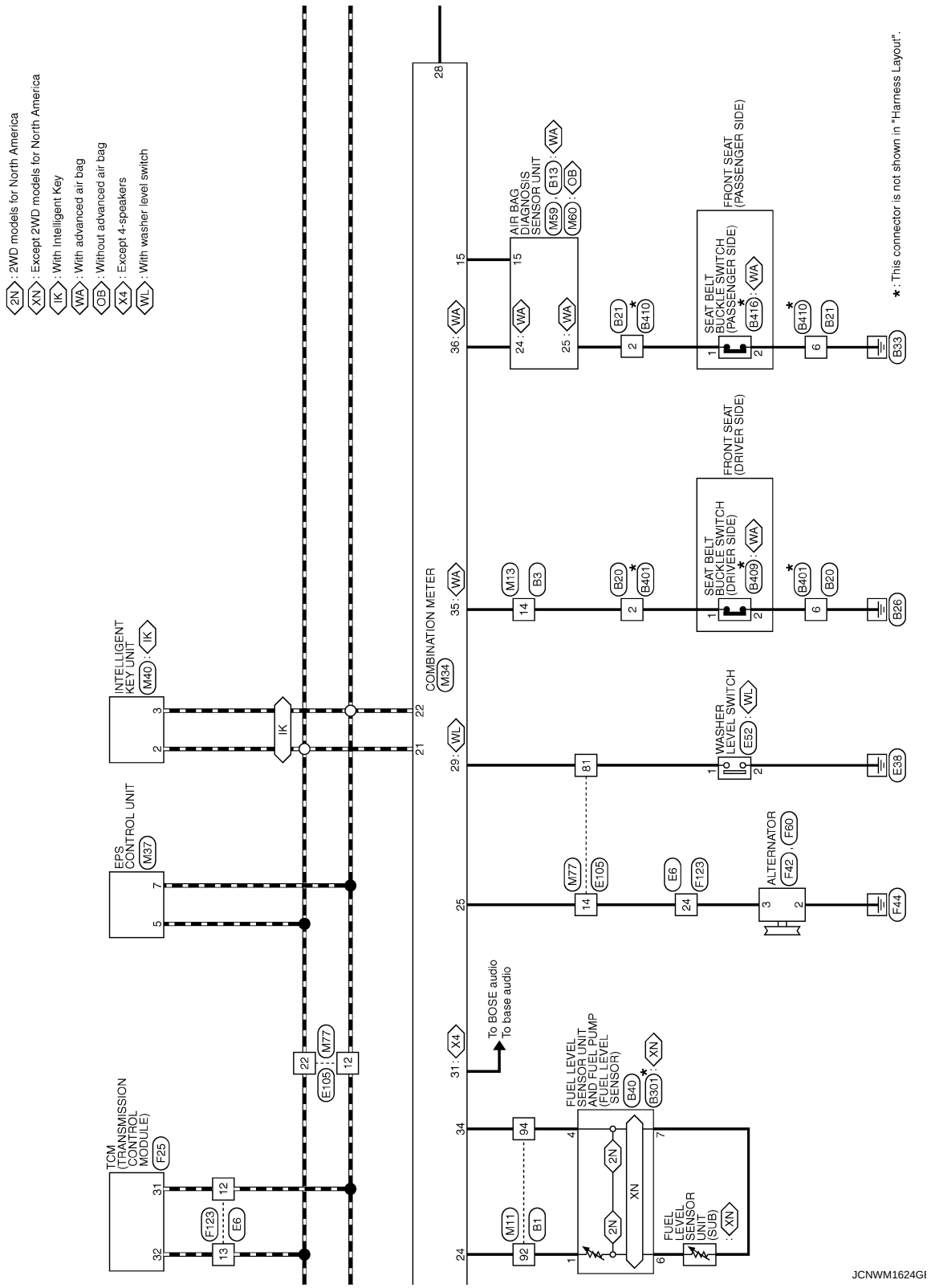

★ : This connector is not shown in "Harness Layout".

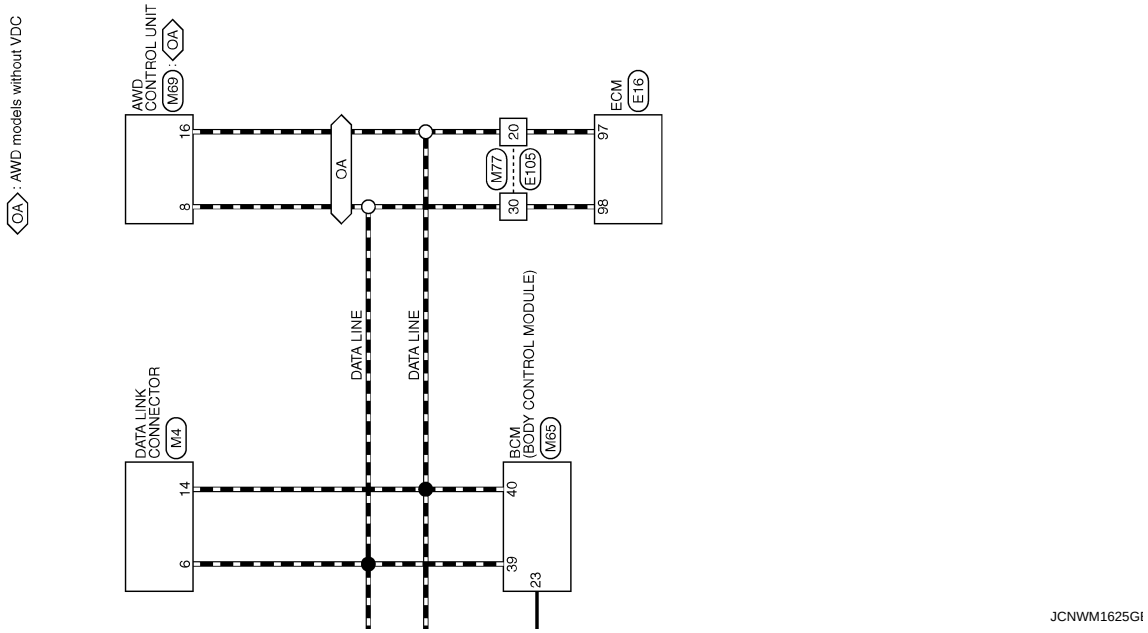
OA : AWD models without VDC
AWD CONTROL UNIT
M69
OA
16
8
OA
DATA LINK CONNECTOR
M4
14
6
DATA LINE
DATA LINE
M77
E105
20
30
BCM (BODY CONTROL MODULE)
M65
40
39
23
ECM
E16
97
98
JCNWM1625GI

METER

Connector No.	B1
Connector Name	WIRE TO WIRE
Connector Type	TH80MW-CS16-TM4

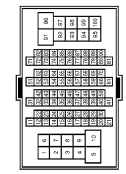

Terminal No.	Color of Wire	Signal Name [Specification]
92	R	–
94	G	–

Connector No.	B3
Connector Name	WIRE TO WIRE
Connector Type	TH32MW-NH

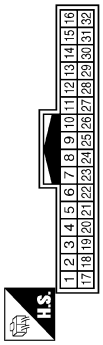

Terminal No.	Color of Wire	Signal Name [Specification]
14	BR	–

Connector No.	B13
Connector Name	AIR BAG DIAGNOSIS SENSOR UNIT
Connector Type	TK12FY-1V-EX

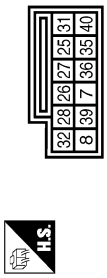

Terminal No.	Color of Wire	Signal Name [Specification]
25	LG	BUCKLE SW RH

Connector No.	B20
Connector Name	WIRE TO WIRE
Connector Type	NS06FW-CS

Terminal No.	Color of Wire	Signal Name [Specification]
2	BR	–
6	B	–

Connector No.	B21
Connector Name	WIRE TO WIRE
Connector Type	NS06FW-CS

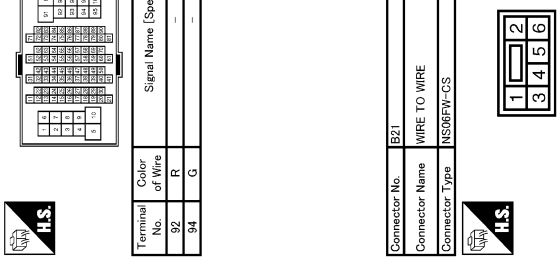

Terminal No.	Color of Wire	Signal Name [Specification]
2	LG	–
6	B	–

Connector No.	B40
Connector Name	FUEL LEVEL SENSOR UNIT AND FUEL PUMP
Connector Type	E05FGY-RS

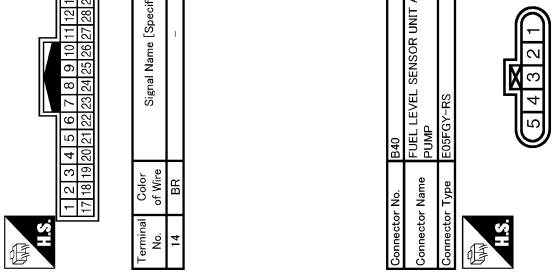

Terminal No.	Color of Wire	Signal Name [Specification]
1	R	–
4	G	–

Connector No.	B301
Connector Name	FUEL LEVEL SENSOR UNIT AND FUEL PUMP
Connector Type	–

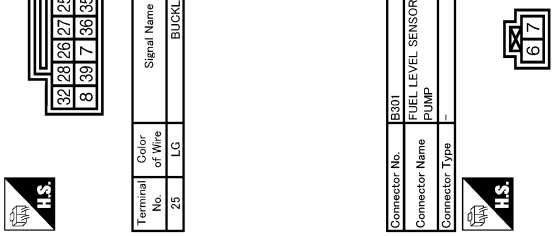

Terminal No.	Color of Wire	Signal Name [Specification]
6	–	–
7	–	–

Connector No.	B401
Connector Name	WIRE TO WIRE
Connector Type	NS06MW-CS

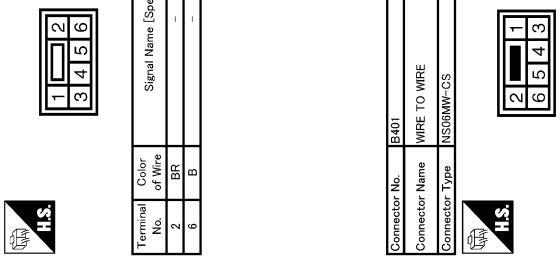

Terminal No.	Color of Wire	Signal Name [Specification]
2	W/G	–
6	GR	–

JCNWM1626GI

METER

Connector No.	B409
Connector Name	SEAT BELT BUCKLE SWITCH (DRIVER SIDE)
Connector Type	TK03FW

Terminal No.	Color of Wire	Signal Name [Specification]
1	W/G	–
2	GR	–

Connector No.	B410
Connector Name	WIRE TO WIRE
Connector Type	NS06MW-CS

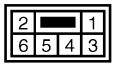

Terminal No.	Color of Wire	Signal Name [Specification]
2	W/G	–
6	GR	–

Connector No.	B416
Connector Name	SEAT BELT BUCKLE SWITCH (PASSENGER SIDE)
Connector Type	TK03FW

Terminal No.	Color of Wire	Signal Name [Specification]
1	W/G	–
2	GR	–

Connector No.	E6
Connector Name	WIRE TO WIRE
Connector Type	TK24MW-1V

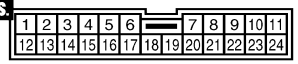

Terminal No.	Color of Wire	Signal Name [Specification]
12	P	–
13	L	–
23	W	–
24	L	–

Connector No.	E13
Connector Name	IPDM E/R (INTELLIGENT POWER DISTRIBUTION MODULE ENGINE ROOM)
Connector Type	TH12FW-NH

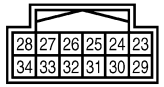

Terminal No.	Color of Wire	Signal Name [Specification]
23	W	–
26	P	–
27	L	–

Connector No.	E16
Connector Name	ECM
Connector Type	RH24FB-RZ8-L-LH

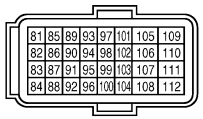

Terminal No.	Color of Wire	Signal Name [Specification]
97	P	VEHCAN-L
98	L	VEHCAN-H

Connector No.	E36
Connector Name	ABS ACTUATOR AND ELECTRIC UNIT (CONTROL UNIT)
Connector Type	RH28FB-NU4-DH

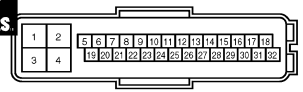

Terminal No.	Color of Wire	Signal Name [Specification]
9	P	CAN L
22	L	CAN H

Connector No.	E37
Connector Name	BRAKE FLUID LEVEL SWITCH
Connector Type	YV02FGY

Terminal No.	Color of Wire	Signal Name [Specification]
1	LG	–
2	B	–

JCNWM1627GI

METER

Connector No.	E44
Connector Name	AMBIENT SENSOR
Connector Type	RS02FB

Terminal No.	Color of Wire	Signal Name [Specification]
1	BR	–
2	L	–

Connector No.	E52
Connector Name	WASHER LEVEL SWITCH
Connector Type	Z02FBR

Terminal No.	Color of Wire	Signal Name [Specification]
1	W	–
2	B	–

Connector No.	E103
Connector Name	PARKING BRAKE SWITCH
Connector Type	P01FB-A

Terminal No.	Color of Wire	Signal Name [Specification]
1	V	–

Connector No.	E105
Connector Name	WIRE TO WIRE
Connector Type	TH80FW-CS16-TM4

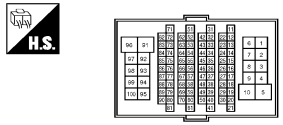

Terminal No.	Color of Wire	Signal Name [Specification]
12	P	–
14	L	–
15	V	–
20	P	–
22	L	–
24	LG	–
30	L	–
78	L	–
81	W	–
88	BR	–

Connector No.	F25
Connector Name	TCM (TRANSMISSION CONTROL MODULE)
Connector Type	RH40FB-RZ8-L-RH

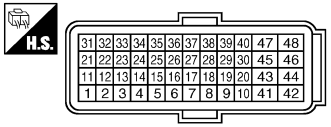

Terminal No.	Color of Wire	Signal Name [Specification]
31	P	CAN-L
32	L	CAN-H

Connector No.	F42
Connector Name	ALTERNATOR
Connector Type	–

Terminal No.	Color of Wire	Signal Name [Specification]
2	–	–

Connector No.	F60
Connector Name	ALTERNATOR
Connector Type	X02FW

Terminal No.	Color of Wire	Signal Name [Specification]
3	L	–

Connector No.	F63
Connector Name	OIL PRESSURE SWITCH
Connector Type	E01FGY-RS-AR

Terminal No.	Color of Wire	Signal Name [Specification]
1	W	–

JCNWM1628GI

METER

Connector No.	F123
Connector Name	WIRE TO WIRE
Connector Type	TK24FW-1V

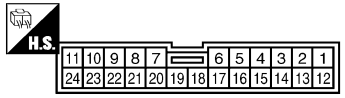

Terminal No.	Color of Wire	Signal Name [Specification]
12	P	–
13	L	–
23	W	–
24	L	–

Connector No.	M4
Connector Name	DATA LINK CONNECTOR
Connector Type	BD16FW

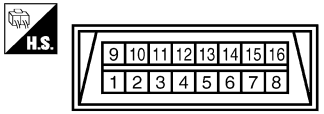

Terminal No.	Color of Wire	Signal Name [Specification]
6	L	–
14	P	–

Connector No.	M11
Connector Name	WIRE TO WIRE
Connector Type	TH80FW-CS16-TM4

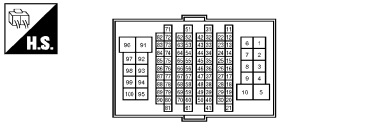

Terminal No.	Color of Wire	Signal Name [Specification]
92	B	–
94	G	–

Connector No.	M13
Connector Name	WIRE TO WIRE
Connector Type	TH32FW-NH

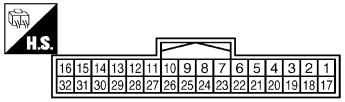

Terminal No.	Color of Wire	Signal Name [Specification]
14	O	–

Connector No.	M32
Connector Name	COMBINATION SWITCH (SPIRAL CABLE)
Connector Type	TK06FY-EX-1V

Terminal No.	Color of Wire	Signal Name [Specification]
40	G	–
41	B	–
42	L	–

Connector No.	M34
Connector Name	COMBINATION METER
Connector Type	SAB40FW

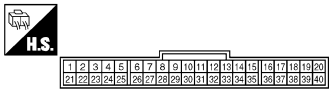

Terminal No.	Color of Wire	Signal Name [Specification]
1	LG	BAT
2	O	IGN
3	B	GND2(POWER)
9	GR	O/D OFF SW
12	G	STRG SW DOWN
13	Y	ILL OUT
14	L	STRG SW UP
15	LG	AIR BAG
19	BR	AMBIENT SENS
20	SB	AMBIENT SENS GND
21	L	CAN-H
22	P	CAN-L
23	B	GND3(CIRCUIT)
24	B	FUEL LEVEL SENS GND
25	SB	ALTERNATOR
26	V	PARKING BRAKE SW
27	BR	BRAKE FLUID LEVEL SE
28	B	SECURITY
29	W	WASH LIQUID SENS
31	L	VEHICLE SPEED (8-PULSE)
34	G	FUEL LEVEL SENS
35	O	SEAT BELT BUCKLE SW (DRIVER SIDE)
36	G	SEAT BELT BUCKLE SW (PASSENGER SIDE)
37	P	NOT MANUAL MODE
38	O	SHIFT DOWN
39	V	SHIFT UP
40	LG	MANUAL MODE

Connector No.	M37
Connector Name	EPS CONTROL UNIT
Connector Type	MAA08FB

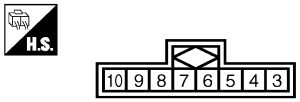

Terminal No.	Color of Wire	Signal Name [Specification]
5	L	–
7	P	–

JCNWM1629GI

METER

Connector No.	M40
Connector Name	INTELLIGENT KEY UNIT
Connector Type	TH40FW-NH

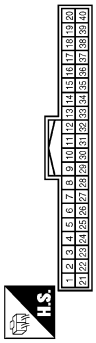

Terminal No.	Color of Wire	Signal Name [Specification]
2	L	CAN-H
3	P	CAN-L

Connector No.	M57
Connector Name	CONTROL DEVICE
Connector Type	TH16FW-NH

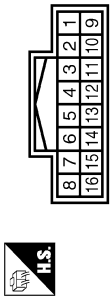

Terminal No.	Color of Wire	Signal Name [Specification]
1	GR	–
2	B	–
7	LG	–
8	O	–
9	V	–
10	B	–
11	P	–

Connector No.	M59
Connector Name	AIR BAG DIAGNOSIS SENSOR UNIT (WITH ADVANCED AIR BAG)
Connector Type	TK28FY-EX-SC

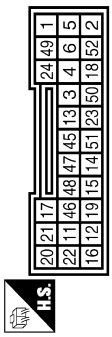

Terminal No.	Color of Wire	Signal Name [Specification]
15	LG	A/B W/L
24	G	SEATBELT W/L

Connector No.	M60
Connector Name	AIR BAG DIAGNOSIS SENSOR UNIT (WITHOUT ADVANCED AIR BAG)
Connector Type	TK20FY-EX-SC

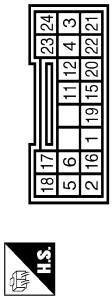

Terminal No.	Color of Wire	Signal Name [Specification]
15	LG	A/B W/L

Connector No.	M65
Connector Name	BCM (BODY CONTROL MODULE)
Connector Type	TH40FW-NH

Terminal No.	Color of Wire	Signal Name [Specification]
23	B	SECURITY IND OUT PUT
39	L	CAN-H
40	P	CAN-L

Connector No.	M69
Connector Name	AWD CONTROL UNIT
Connector Type	TH16FW-NH

Terminal No.	Color of Wire	Signal Name [Specification]
8	L	CAN-H
16	P	CAN-L

Connector No.	M77
Connector Name	WIRE TO WIRE
Connector Type	TH80MW-CS16-TM4

Terminal No.	Color of Wire	Signal Name [Specification]
12	P	–
14	SB	–
15	V	–
20	P	–
22	L	–
24	BR	–
30	L	–
78	SB	–
81	W	–
88	BR	–

Connector No.	M353
Connector Name	COMBINATION SWITCH (SPIRAL CABLE)
Connector Type	TK03FW-X

Terminal No.	Color of Wire	Signal Name [Specification]
7	–	–
8	–	–
9	–	–

JCNWM1630GI

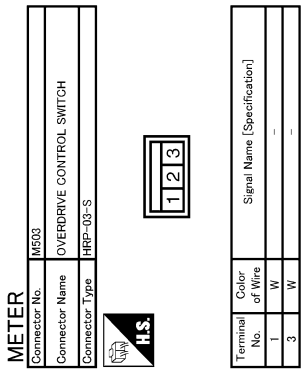

JCNWM1653GI

Fail-safe

INFOID:0000000004504309

The combination meter activates the fail-safe control if the CAN communication lines between each unit are malfunctioning.

Function		Specifications
Speedometer		Reset to zero by suspending communication.
Tachometer		
Meter illumination control		Change to nighttime mode.
Buzzer		Turned off by suspending communication.
Warning lamp/indicator lamp	ABS warning lamp	Turned on by suspending communication.
	Brake warning lamp	
	VDC OFF indicator lamp	
	SLIP indicator lamp	
	AWD warning lamp	
	Low tire pressure warning lamp	The lamp turns ON after flashing for 1 minutes
	SPORT/CVT indicator lamp	Turned off by suspending communication.
	AWD indicator lamp	
	AWD LOCK indicator lamp	
	Oil pressure warning lamp	
	Door warning lamp	
	Malfunction indicator lamp	
	CRUISE indicator lamp	
	SET indicator lamp	
	KEY warning lamp	
	High beam indicator lamp	
	Turn signal indicator lamp	
	Tail indicator lamp	

DTC Index

INFOID:0000000004504310

Display contents of CONSULT-III	Time		Diagnostic item is detected when...	Refer to
U1000: CAN COMM CIRCUIT	CRNT	PAST	Combination meter is not transmitting or receiving CAN communication signal for 2 seconds or more.	MWI-36
U1010: CONTROL UNIT (CAN)	CRNT	PAST	Detecting error during the initial diagnosis of CAN controller of combination meter.	MWI-37
B2205: VEHICLE SPEED	CRNT	PAST	The abnormal vehicle speed signal is input from ABS actuator and electric unit (control unit) for 2 seconds or more.	MWI-38
B2267: ENGINE SPEED	CRNT	PAST	ECM continuously transmits abnormal engine speed signals for 2 seconds or more.	MWI-39
B2268: WATER TEMP	CRNT	PAST	ECM continuously transmits abnormal engine coolant temperature signals for 60 seconds or more.	MWI-40

NOTE:
The details of TIME display are as follows.
- CRNT: The malfunctions that are detected now.
- PAST: The malfunctions was detected in the past. IGN counter is displayed on FED (Freeze Frame data).
- 1 - 39: The number is indicated when it is normal at past and a malfunction was detected in the past. It increases like 0 → 1 → 2 ... 38 → 39 after returning to the normal condition whenever IGN OFF → ON. It is fixed to 39 until the self-diagnosis results are erased if it is over 39. It returns to 0 when a malfunction is detected again in the process.

IPDM E/R (INTELLIGENT POWER DISTRIBUTION MODULE ENGINE ROOM)

Reference Value

INFOID:0000000004553953

VALUES ON THE DIAGNOSIS TOOL

Monitor Item	Condition		Value/Status
MOTOR FAN REQ	Engine idle speed	Changes depending on engine coolant temperature, air conditioner operation status, vehicle speed, etc.	1 - 4
AC COMP REQ	Engine running	A/C switch OFF	Off
		A/C switch ON (Compressor is operating)	On
TAIL&CLR REQ	Lighting switch OFF		Off
	Lighting switch 1ST or 2ND		On
HL LO REQ	Lighting switch OFF		Off
	Lighting switch 2ND		On
HL HI REQ	Lighting switch OFF		Off
	Lighting switch HI (Light is illuminated)		On
FR FOG REQ **NOTE:** This item is monitored only on the vehicle with front fog lamp.	Lighting switch 2ND	Front fog lamp switch OFF	Off
		Front fog lamp switch ON	On
FR WIP REQ	Ignition switch ON	Front wiper switch OFF	Stop
		Front wiper switch INT	1LOW
		Front wiper switch LO	Low
		Front wiper switch HI	Hi
WIP AUTO STOP	Ignition switch ON	Front wiper stop position	STOP P
		Any position other than front wiper stop position	ACT P
WIP PROT	Ignition switch ON	Front wiper operates normally	Off
		Front wiper stops at fail-safe operation	BLOCK
ST RLY REQ **NOTE:** Vehicle without Intelligent Key system indicates only “ON”, and it does not change.	When Intelligent Key is outside the vehicle, and the push switch is pushed		Off
	When Intelligent Key is inside the vehicle, and the push switch is pushed		On
IGN RLY	Ignition switch OFF or ACC		Off
	Ignition switch ON		On
RR DEF REQ	Ignition switch ON	Rear window defogger switch OFF	Off
		Rear window defogger switch ON (Rear window defogger is operating)	On
OIL P SW	Ignition switch OFF, ACC or engine running		Open
	Ignition switch ON		Close
DTRL REQ **NOTE:** This item is monitored only on the vehicle with the daytime running light system.	Daytime running light system is not operated.		Off
	Daytime running light system is operated.		On

Monitor Item	Condition	Value/Status
HOOD SW **NOTE:** This item is monitored only the vehicle for Mexico.	Close the hood	Off
	Open the hood	On
THFT HRN REQ	Not operation	Off
	Horn is activated with vehicle security system or panic alarm system.	On
HORN CHIRP	Not operation	Off
	Horn is activated with key fob LOCK operation.	On

TERMINAL LAYOUT

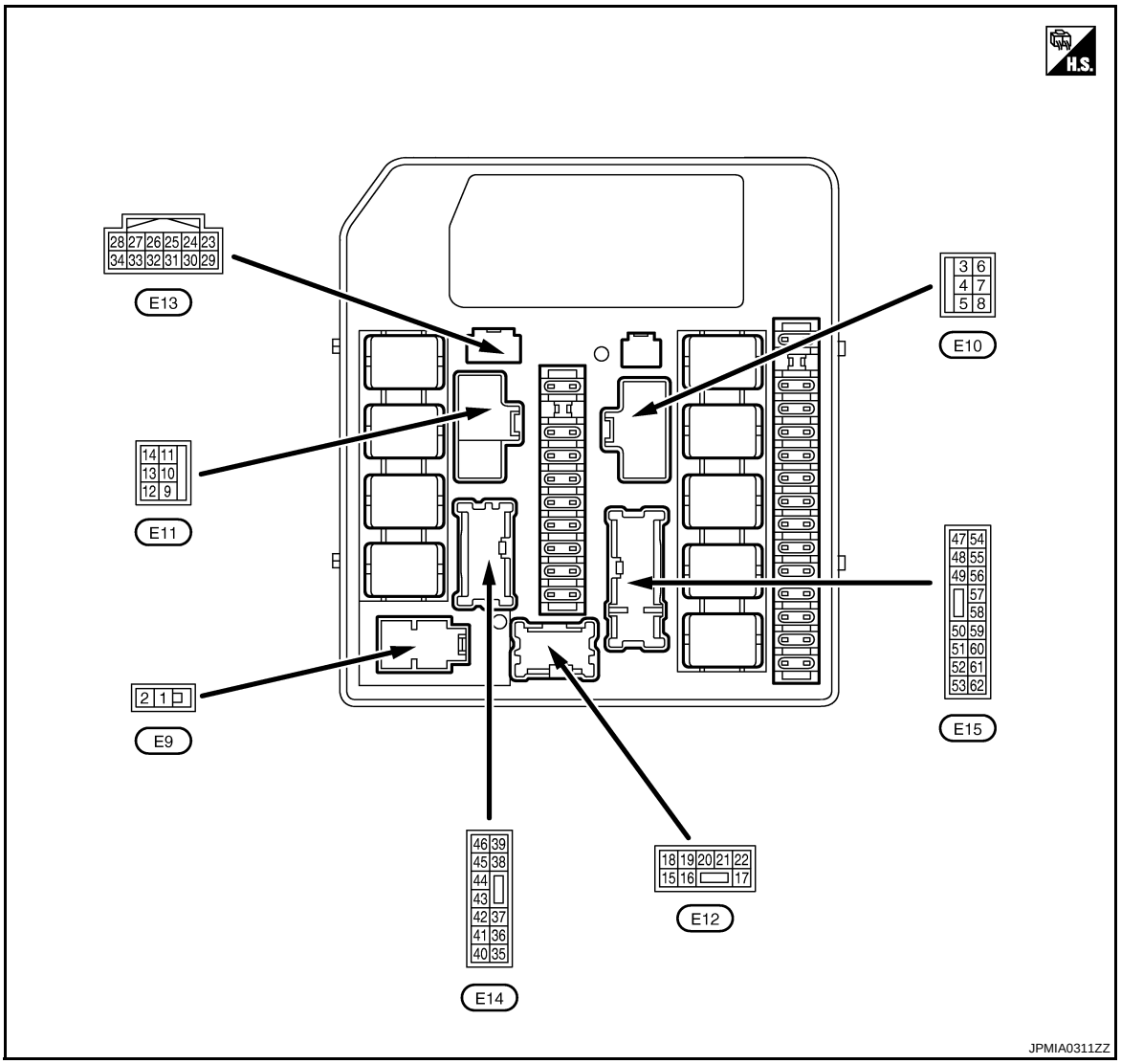

PHYSICAL VALUES

Terminal No. (Wire color)		Description		Condition	Value (Approx.)
+	–	Signal name	Input/ Output		
1 (R)	Ground	Battery power supply	Input	Ignition switch OFF	Battery voltage
2 (G)	Ground	Battery power supply	Input	Ignition switch OFF	Battery voltage

Terminal No. (Wire color)		Description		Condition		Value (Approx.)
+	–	Signal name	Input/ Output			
3 (O)	Ground	Starter relay power supply	Output	When engine is clanking		Battery voltage
				When engine is not clanking		0 V
4 (W)	Ground	Cooling fan relay-1 power supply	Output	Cooling fan operation	OFF	0 V
					MID or HI	Battery voltage
5 (R)	Ground	Ignition switch START	Input	Ignition switch OFF, ACC or ON		0 V
				Ignition switch START		Battery voltage
6 (BR)	Ground	Battery power supply (Cooling fan relay)	Input	Ignition switch OFF		Battery voltage
7 (P)	Ground	Cooling fan motor-2 (HI) ground	—	Cooling fan operation	OFF	Battery voltage
					HI	0 V
8 (G)	Ground	Cooling fan relay-2 power supply	Output	Cooling fan operation	OFF	0 V
					HI	Battery voltage
11 (B)	Ground	Ground	—	Ignition switch ON		0 V
12 (O)	Ground	Rear window defogger relay power supply	Output	Ignition switch ON	Rear window defogger switch OFF	0 V
					Rear window defogger switch ON	Battery voltage
15*1 (SB)	Ground	Daytime running light relay control	Output	Daytime running light system	Not operated	Battery voltage
					Operated	0 V
16*2 (Y)	Ground	Front fog lamp (LH)	Output	Lighting switch 2ND	Front fog lamp switch OFF	0 V
					Front fog lamp switch ON	Battery voltage
17*2 (W)	Ground	Front fog lamp (RH)	Output	Lighting switch 2ND	Front fog lamp switch OFF	0 V
					Front fog lamp switch ON	Battery voltage
18 (L)	Ground	Headlamp LO (LH)	Output	Lighting switch OFF		0 V
				Lighting switch 2ND		Battery voltage
20 (SB)	Ground	Headlamp LO (RH)	Output	Lighting switch OFF		0 V
				Lighting switch 2ND		Battery voltage
21 (G)	Ground	Headlamp HI (LH)	Output	Lighting switch OFF		0 V
				• Lighting switch 2ND and HI • Lighting switch PASS		Battery voltage
				Daytime running light system Operated*1		7.0 V
22 (LG)	Ground	Headlamp HI (RH)	Output	Lighting switch OFF		0 V
				• Lighting switch 2ND and HI • Lighting switch PASS		Battery voltage
				Daytime running light system Operated*1		7.0 V
23 (W)	Ground	Oil pressure switch	Input	Ignition switch ON	Engine stopped	0 V
					Engine running	Battery voltage
24 (Y)	Ground	Front wiper auto stop	Input	Ignition switch ON	Front wiper stop position	0 V
					Any position other than front wiper stop position	Battery voltage
25 (B)	Ground	Ground	—	Ignition switch ON		0 V
26 (P)	—	CAN-L	Input/ Output	—		—

Terminal No. (Wire color)		Description		Condition		Value (Approx.)
+	–	Signal name	Input/ Output			
27 (L)	—	CAN-H	Input/ Output	—		—
31 (LG)	Ground	Cooling fan relay-4 control	Output	Cooling fan operation	OFF	Battery voltage
					LO	0 - 1.0 V
32 (V)	Ground	Throttle control motor relay control	Input	After passing approximately 2 seconds or more after turning the ignition switch from ON to OFF		Battery voltage
				• Ignition switch ON • For approximately 2 seconds after turning ignition switch from ON to OFF		0 - 1.0 V
33 (GR)	Ground	Fuel pump relay control	Input	Ignition switch OFF		0 V
				Ignition switch ON	Engine stopped	Battery voltage
					Engine running	0.8 V
34*3 (W)	Ground	Hood switch	Input	Close the hood		Battery voltage
				Open the hood		0 V
37 (R)	Ground	Tail, license plate lamps and illuminations	Output	Lighting switch OFF		0 V
				Lighting switch 1ST		Battery voltage
38 (R)	Ground	Parking lamp (LH)	Output	Lighting switch OFF		0 V
				Lighting switch 1ST		Battery voltage
39 (GR)	Ground	Parking lamp (RH)	Output	Lighting switch OFF		0 V
				Lighting switch 1ST		Battery voltage
40 (BR)	Ground	Ignition relay power supply	Output	Ignition switch OFF or ACC		0 V
				Ignition switch ON		Battery voltage
41 (O)	Ground	Ignition relay power supply	Output	Ignition switch OFF or ACC		0 V
				Ignition switch ON		Battery voltage
42 (L)	Ground	Front wiper HI	Output	Ignition switch ON	Front wiper switch OFF	0 V
					Front wiper switch HI	Battery voltage
43 (G)	Ground	Front wiper LO	Output	Ignition switch ON	Front wiper switch OFF	0 V
					Front wiper switch LO	Battery voltage
45 (Y)	Ground	Starter relay power supply	Input	Ignition switch ON	Selector lever “P” or “N”	Battery voltage
					Selector lever in any position other than “P” or “N”	0 V
46 (W)	Ground	Fuel pump relay power supply	Output	• Ignition switch OFF or ACC • After passing approximately 1 second or more after turning the ignition switch ON		0 V
				• For approximately 1 second after turning the ignition switch ON • Engine running		Battery voltage
47 (BR)	Ground	ECM relay power supply	Output	After passing approximately 4 seconds or more after turning the ignition switch from ON to OFF		0 V
				• Ignition switch ON • For approximately 4 seconds after turning ignition switch from ON to OFF		Battery voltage
48 (R)	Ground	ECM relay power supply	Output	After passing approximately 4 seconds or more after turning the ignition switch from ON to OFF		0 V
				• Ignition switch ON • For approximately 4 seconds after turning ignition switch from ON to OFF		Battery voltage

Terminal No. (Wire color)		Description		Condition		Value (Approx.)
+	–	Signal name	Input/ Output			
50 (G)	Ground	Cooling fan relay-5 control	Output	Cooling fan operation	OFF	Battery voltage
					MID or HI	0 - 1.0 V
51 (L)	Ground	ECM relay control	Output	After passing approximately 4 seconds or more after turning the ignition switch from ON to OFF		Battery voltage
				• Ignition switch ON • For approximately 4 seconds after turning ignition switch from ON to OFF		0 - 1.0 V
52 (P)	Ground	Throttle control motor relay power supply	Output	After passing approximately 2 seconds or more after turning the ignition switch from ON to OFF		0 V
				• Ignition switch ON • For approximately 2 seconds after turning ignition switch from ON to OFF		Battery voltage
55 (O)	Ground	A/C relay power supply	Output	Engine stopped		0 V
				Engine running	A/C switch OFF	0 V
					A/C switch ON (A/C compressor is operating)	Battery voltage
56 (SB)	Ground	Ignition switch ON	Input	Ignition switch OFF or ACC		0 V
				Ignition switch ON		Battery voltage
57 (V)	Ground	Horn relay control	Output	The horn is not activated		Battery voltage
				The horn is activated		0 V
58 (LG)	Ground	Ignition relay power supply	Output	Ignition switch OFF or ACC		0 V
				Ignition switch ON		Battery voltage
59 (BR)	Ground	Ignition relay power supply	Output	Ignition switch OFF or ACC		0 V
				Ignition switch ON		Battery voltage
60 (SB)	Ground	Ignition relay power supply	Output	Ignition switch OFF or ACC		0 V
				Ignition switch ON		Battery voltage
61 (R)	Ground	ECM power supply	Output	Ignition switch OFF		Battery voltage

*1: With daytime running light system

*2: With front fog lamp system

*3: For Mexico

Wiring Diagram - IPDM E/R -

INFOID:0000000004553954

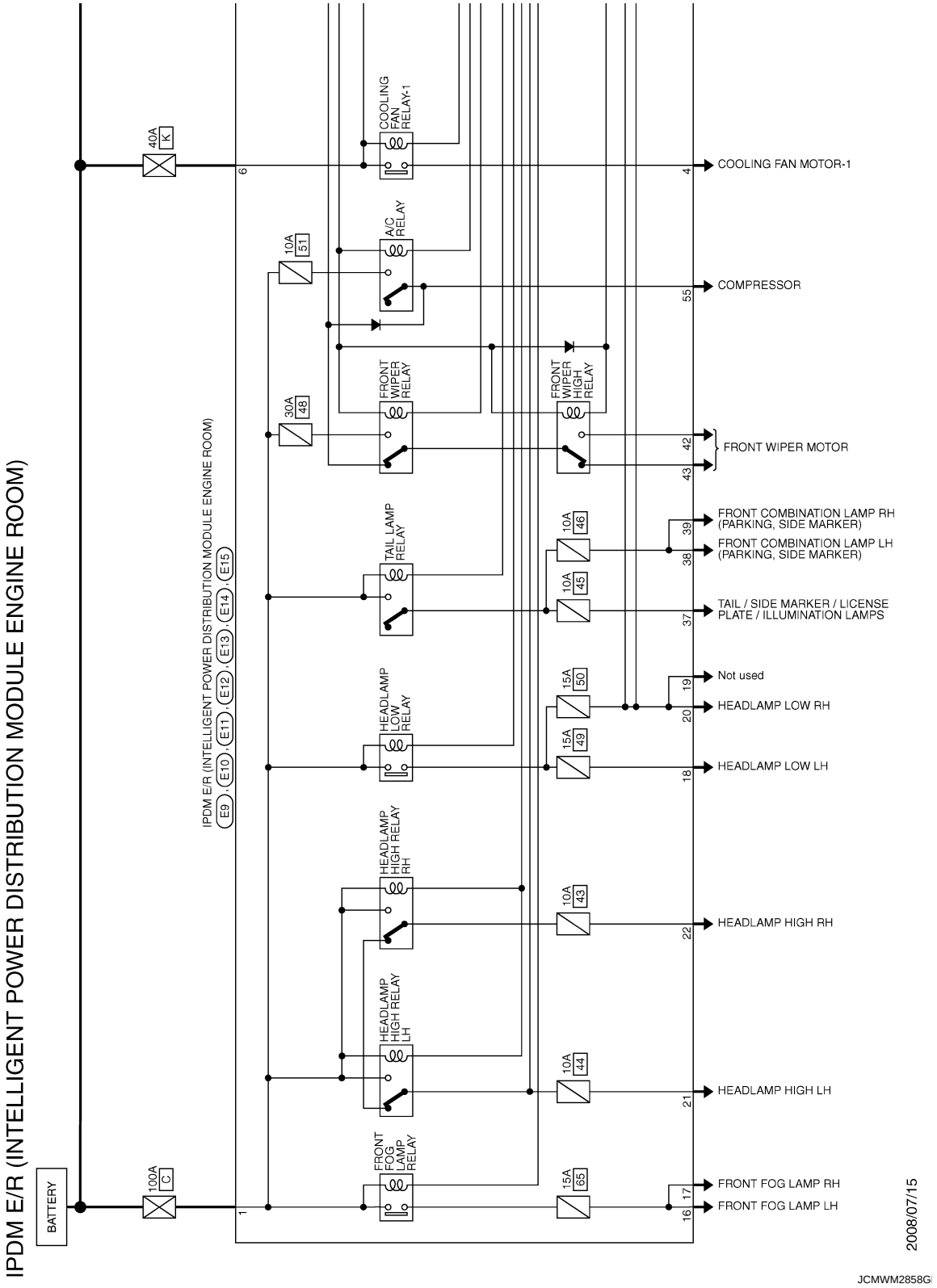

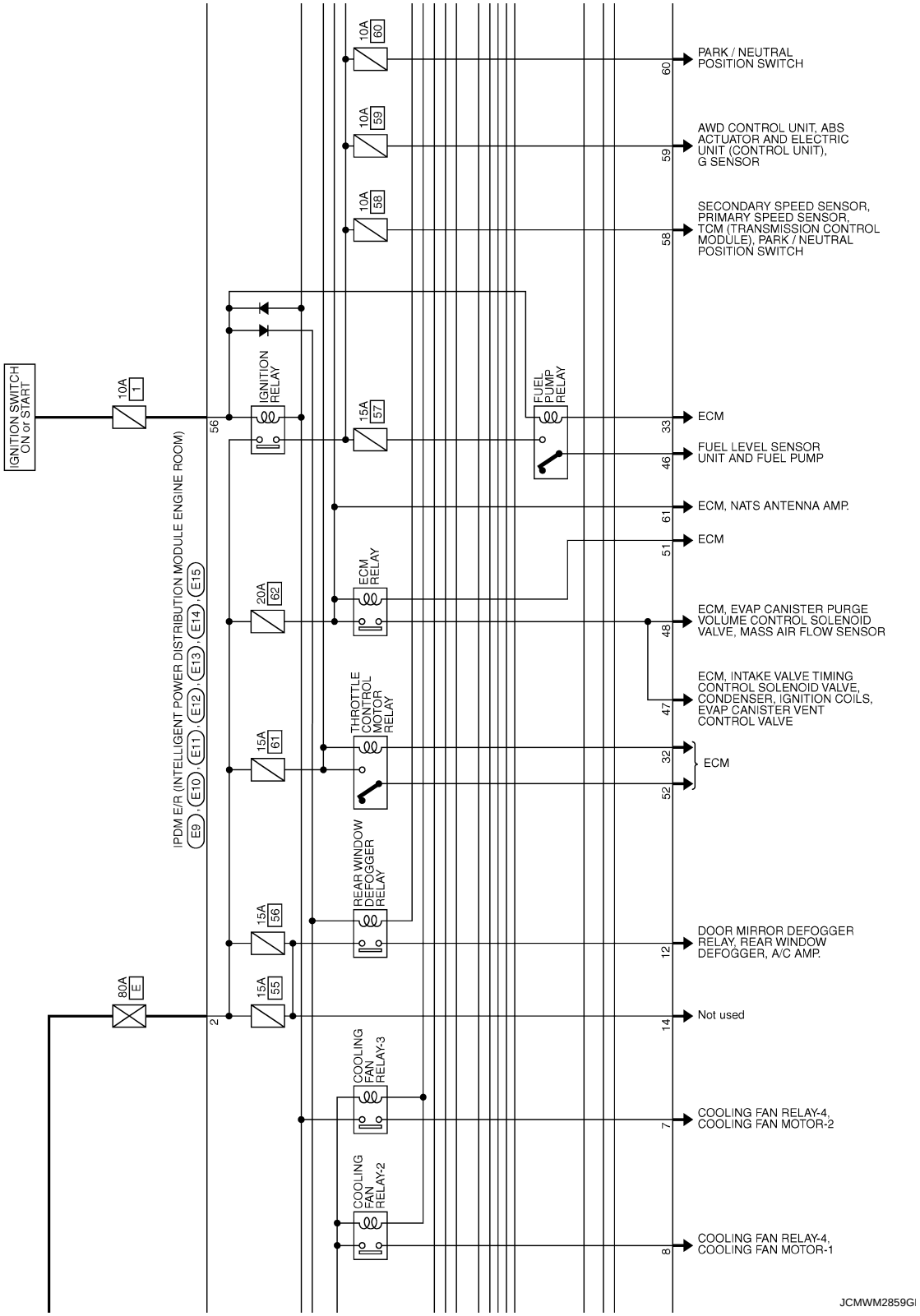
IGNITION SWITCH ON or START
10A 1
IPDM E/R (INTELLIGENT POWER DISTRIBUTION MODULE ENGINE ROOM)
E9, E10, E11, E12, E13, E14, E15
56
IGNITION RELAY
20A 62
15A 61
15A 56
15A 55
80A E
2
10A 60
10A 59
10A 58
15A 57
ECM RELAY
THROTTLE CONTROL MOTOR RELAY
REAR WINDOW DEFOGGER RELAY
COOLING FAN RELAY-3
COOLING FAN RELAY-2
FUEL PUMP RELAY
PARK / NEUTRAL POSITION SWITCH
60
AWD CONTROL UNIT, ABS ACTUATOR AND ELECTRIC UNIT (CONTROL UNIT), G SENSOR
59
SECONDARY SPEED SENSOR, PRIMARY SPEED SENSOR, TCM (TRANSMISSION CONTROL MODULE), PARK / NEUTRAL POSITION SWITCH
58
ECM
33
FUEL LEVEL SENSOR UNIT AND FUEL PUMP
46
ECM, NATS ANTENNA AMP.
61
ECM
51
ECM, EVAP CANISTER PURGE VOLUME CONTROL SOLENOID VALVE, MASS AIR FLOW SENSOR
48
ECM, INTAKE VALVE TIMING CONTROL SOLENOID VALVE, CONDENSER, IGNITION COILS, EVAP CANISTER VENT CONTROL VALVE
47
ECM
32
52
DOOR MIRROR DEFOGGER RELAY, REAR WINDOW DEFOGGER, A/C AMP.
12
Not used
14
COOLING FAN RELAY-4, COOLING FAN MOTOR-2
7
COOLING FAN RELAY-4, COOLING FAN MOTOR-1
8
JCMWM2859GI

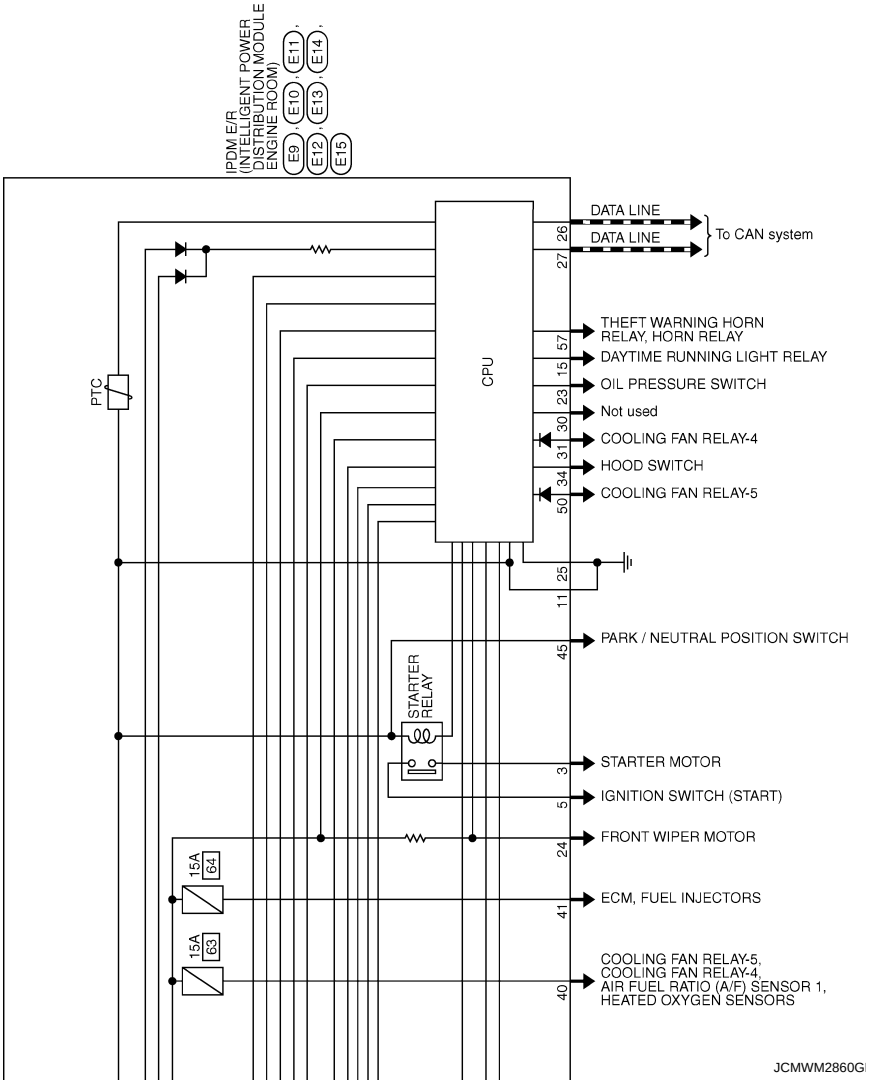
IPDM E/R
(INTELLIGENT POWER
DISTRIBUTION MODULE
ENGINE ROOM)
E9
E10
E11
E12
E13
E14
E15
PTC
CPU
STARTER
RELAY
15A
63
15A
64
26
27
57
15
23
30
31
34
50
25
11
45
3
5
24
41
40
DATA LINE
DATA LINE
To CAN system
THEFT WARNING HORN
RELAY, HORN RELAY
DAYTIME RUNNING LIGHT RELAY
OIL PRESSURE SWITCH
Not used
COOLING FAN RELAY-4
HOOD SWITCH
COOLING FAN RELAY-5
PARK / NEUTRAL POSITION SWITCH
STARTER MOTOR
IGNITION SWITCH (START)
FRONT WIPER MOTOR
ECM, FUEL INJECTORS
COOLING FAN RELAY-5,
COOLING FAN RELAY-4,
AIR FUEL RATIO (A/F) SENSOR 1,
HEATED OXYGEN SENSORS
JCMWM2860G

IPDM E/R (INTELLIGENT POWER DISTRIBUTION MODULE ENGINE ROOM)

Connector No.	E9
Connector Name	IPDM E/R (INTELLIGENT POWER DISTRIBUTION MODULE ENGINE ROOM)
Connector Type	L02FB-MC

H.S.

Terminal No.	Color of Wire	Signal Name [Specification]
1	R	–
2	G	–

Connector No.	E10
Connector Name	IPDM E/R (INTELLIGENT POWER DISTRIBUTION MODULE ENGINE ROOM)
Connector Type	M06FW-LC

H.S.

Terminal No.	Color of Wire	Signal Name [Specification]
3	O	–
4	W	–
5	R	–
6	BR	–
7	P	–
8	G	–

Connector No.	E11
Connector Name	IPDM E/R (INTELLIGENT POWER DISTRIBUTION MODULE ENGINE ROOM)
Connector Type	M06FB-LC

H.S.

Terminal No.	Color of Wire	Signal Name [Specification]
11	B	–
12	O	–

Connector No.	E12
Connector Name	IPDM E/R (INTELLIGENT POWER DISTRIBUTION MODULE ENGINE ROOM)
Connector Type	NS08FBR-CS

H.S.

Terminal No.	Color of Wire	Signal Name [Specification]
15	SB	–
16	Y	–
17	W	–
18	L	–
20	SB	–
21	G	–
22	LG	–

Connector No.	E13
Connector Name	IPDM E/R (INTELLIGENT POWER DISTRIBUTION MODULE ENGINE ROOM)
Connector Type	TH12FW-NH

H.S.

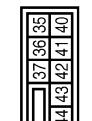

Terminal No.	Color of Wire	Signal Name [Specification]
23	W	–
24	Y	–
25	B	–
26	P	–
27	L	–
31	LG	–
32	V	–
33	GR	–
34	W	–

Connector No.	E14
Connector Name	IPDM E/R (INTELLIGENT POWER DISTRIBUTION MODULE ENGINE ROOM)
Connector Type	NS12FBR-CS

H.S.

Terminal No.	Color of Wire	Signal Name [Specification]
37	R	–
38	R	–
39	GR	–
40	BR	–
41	O	–
42	L	–
43	G	–
45	Y	–
46	W	–

Connector No.	E15
Connector Name	IPDM E/R (INTELLIGENT POWER DISTRIBUTION MODULE ENGINE ROOM)
Connector Type	NS16FW-CS

H.S.

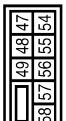

Terminal No.	Color of Wire	Signal Name [Specification]
47	BR	–
48	R	–
50	G	–
51	L	–
52	P	–
55	O	–
56	SB	–
57	V	–
58	LG	–
59	BR	–
60	SB	–

Terminal No.	Color of Wire	Signal Name [Specification]
61	R	–

JCMWM2861G

Fail-safe

INFOID:0000000004553955

CAN COMMUNICATION CONTROL

When CAN communication with ECM and BCM is impossible, IPDM E/R performs fail-safe control. After CAN communication recovers normally, it also returns to normal control.

If no CAN communication is available with ECM

Control part	Fail-safe in operation
Cooling fan	• The cooling fan relay-1, the cooling fan relay-2, the cooling fan relay-3 and the cooling fan relay-5 turn ON when the ignition switch is turned ON • The cooling fan relay-1, the cooling fan relay-2, the cooling fan relay-3 and the cooling fan relay-5 turn OFF when the ignition switch is turned OFF • Cooling fan relay-4 OFF
A/C compressor	A/C relay OFF

If no CAN communication is available with BCM

Control part	Fail-safe in operation
Headlamp	• The headlamp low relay turns ON when the ignition switch is turned ON • The headlamp low relay turns OFF when the ignition switch is turned OFF • Headlamp high relay OFF
• Parking lamps • License plate lamps • Tail lamps • Illuminations	• The tail lamp relay and the daytime running light relay* turn ON when the ignition switch is turned ON • The tail lamp relay and the daytime running light relay* turn OFF when the ignition switch is turned OFF
Front wiper	• The status just before activation of fail-safe control is maintained until the ignition switch is turned OFF while the front wiper is operating at LO or HI speed. • The front wiper is operated at LO speed until the ignition switch is turned OFF if the fail-safe control is activated while the front wiper is set in the INT mode and the front wiper motor is operating.
Front fog lamps	Front fog lamp relay OFF
Starter motor	Starter relay OFF
Rear window defogger	Rear window defogger relay OFF
Horn	Horn relay OFF

NOTE:

*: With daytime running light system

IGNITION RELAY MALFUNCTION DETECTION FUNCTION

- IPDM E/R monitors status of ignition relay by the voltage at ignition relay contact circuit inside it.
- IPDM E/R judges that the ignition relay is error, if status of the ignition relay and ignition switch ON signal (CAN).
- If the ignition relay cannot turn OFF due to contact seizure, it activates the tail lamp relay and daytime running light relay* for 10 minutes to alert the user to the ignition relay malfunction when the ignition switch is turned OFF.

Detection		IPDM E/R judgment	Operation
Ignition switch ON signal	Ignition relay		
ON	ON	Ignition relay normal	—
OFF	OFF	Ignition relay normal	—
OFF	ON	Ignition relay ON stuck	Turn on the tail lamp relay and daytime running light relay* for 10 minutes
ON	OFF	Ignition relay OFF stuck	Detect DTC "B2099: IGN RELAY OFF"

NOTE:

*: With daytime running light system

FRONT WIPER CONTROL

IPDM E/R detects the front wiper stop position with the front wiper stop position signal.
When the front wiper stop position signal is in the conditions listed below, IPDM E/R repeats a front wiper 10 seconds operation and 20 seconds stop five times.

Ignition switch	Front wiper switch	Front wiper stop position signal
ON	OFF	The front wiper stop position signal (stop position) cannot be input for 10 seconds.
	ON	The front wiper stop position signal does not change for 10 seconds.

NOTE:
This operation status can be confirmed on the IPDM E/R “Data Monitor” that displays “BLOCK” for the item “WIP PROT” while the wiper is stopped.

DTC Index

INFOID:0000000004553956

CONSULT display	Fail-safe	Timing[NOTE]		Reference page
No DTC is detected. further testing may be required.	—	—	—	—
U1000: CAN COMM CIRCUIT	×	CRNT	PAST	PCS-13
B2099: IGN RELAY OFF	—	CRNT	PAST	PCS-14

NOTE:
The details of time display are as follows.

- CRNT: The malfunctions that are detected now.
- PAST: The number is indicated when it is normal at present and a malfunction was detected in the past.

SYMPTOM DIAGNOSIS

THE FUEL GAUGE DOES NOT MOVE

Description

INFOID:0000000004504315

Fuel gauge segment does not move from a certain position.

Diagnosis Procedure

INFOID:0000000004504316

1. CHECK COMBINATION METER INPUT SIGNAL

Connect CONSULT-III and check the combination meter input signal. Refer to MWI-43, "Component Function Check".

Is the inspection result normal?

YES >> GO TO 2.
NO >> Replace combination meter.

2. CHECK FUEL LEVEL SENSOR SIGNAL CIRCUIT

Check the fuel level sensor signal circuit. Refer to MWI-43, "Diagnosis Procedure".

Is the inspection result normal?

YES >> GO TO 3.
NO >> Repair harness or connector.

3. CHECK FUEL LEVEL SENSOR UNIT AND FUEL PUMP (FUEL LEVEL SENSOR)

Perform a unit check for the fuel level sensor unit and fuel pump (fuel level sensor). Refer to MWI-44, "Component Inspection [Fuel Level Sensor Unit And Fuel Pump (Fuel Level Sensor)]".

Is the inspection result normal?

YES >> GO TO 4.
NO >> Replace fuel level sensor unit and fuel pump (fuel level sensor). Refer to FL-7, "2WD : Removal and Installation" [except for Mexico (2WD)], FL-11, "AWD : Removal and Installation" [except for Mexico (AWD)], FL-25, "Removal and Installation" (for Mexico).

4. CHECK FUEL LEVEL SENSOR UNIT (SUB)

Perform a unit check for the fuel level sensor unit (sub). Refer to MWI-45, "Component Inspection [Fuel Level Sensor Unit (Sub)]".

Is the inspection result normal?

YES >> GO TO 5.
NO >> Replace fuel level sensor unit (sub). Refer to FL-18, "AWD : Removal and Installation" (except for Mexico), FL-25, "Removal and Installation" (for Mexico).

5. CHECK FLOAT INTERFERENCE

Check that the float arm interferes with or binds to other components in the fuel tank.

Is the inspection result normal?

YES >> Replace combination meter.
NO >> Repair or replace malfunctioning parts.

THE OIL PRESSURE WARNING LAMP DOES NOT TURN ON

Description

INFOID:0000000004504317

The oil pressure warning lamp stays off when the ignition switch is turned ON.

Diagnosis Procedure

INFOID:0000000004504318

1. CHECK OIL PRESSURE WARNING LAMP

Perform auto active test. Refer to PCS-8, "Diagnosis Description".

Is oil pressure warning lamp illuminated?

YES >> GO TO 2.
NO >> Replace combination meter.

2. CHECK OIL PRESSURE SWITCH SIGNAL CIRCUIT

Check the oil pressure switch signal circuit. Refer to MWI-47, "Diagnosis Procedure".

Is the inspection result normal?

YES >> GO TO 3.
NO >> Repair harness or connector.

3. CHECK OIL PRESSURE SWITCH

Check the oil pressure switch. Refer to MWI-47, "Component Inspection".

Is the inspection result normal?

YES >> Replace IPDM E/R. Refer to PCS-28, "Removal and Installation".
NO >> Replace oil pressure switch.

THE OIL PRESSURE WARNING LAMP DOES NOT TURN OFF

Description

INFOID:0000000004504319

The oil pressure warning lamp remains illuminated while the engine is running (normal oil pressure).

Diagnosis Procedure

INFOID:0000000004504320

1. CHECK OIL PRESSURE WARNING LAMP

Perform auto active test. Refer to PCS-8, "Diagnosis Description".

Is oil pressure warning lamp illuminated?

YES >> GO TO 2.
NO >> Replace combination meter.

2. CHECK IPDM E/R OUTPUT VOLTAGE

1. Turn ignition switch OFF.
2. Disconnect the oil pressure switch connector.
3. Turn ignition switch ON.
4. Check voltage between the oil pressure switch harness connector terminal and ground.

Terminal			Voltage (Approx.)
(+)		(–)	
Oil pressure switch			
Connector	Terminal		
F63	1	Ground	12 V

Is the inspection result normal?

YES >> GO TO 3.
NO >> GO TO 4.

3. CHECK OIL PRESSURE SWITCH

Check the oil pressure switch. Refer to MWI-47, "Component Inspection".

Is the inspection result normal?

YES >> Replace IPDM E/R. Refer to PCS-28, "Removal and Installation".
NO >> Replace oil pressure switch.

4. CHECK OIL PRESSURE SWITCH SIGNAL CIRCUIT

Check the oil pressure switch signal circuit. Refer to MWI-47, "Diagnosis Procedure".

Is the inspection result normal?

YES >> Replace IPDM E/R. Refer to PCS-28, "Removal and Installation".
NO >> Repair harness or connector.

THE AMBIENT TEMPERATURE DISPLAY IS INCORRECT

Description

INFOID:0000000004504321

- The ambient air temperature display flashes and the ambient air temperature is not displayed.
- The displayed ambient air temperature is higher than the actual temperature.
- The displayed ambient air temperature is lower than the actual temperature.

Diagnosis Procedure

INFOID:0000000004504322

NOTE:
Check that the symptom is not applicable to the normal operating condition before starting diagnosis. Refer to MWI-84, "INFORMATION DISPLAY : Description".

1. CHECK AMBIENT SENSOR SIGNAL CIRCUIT

Check the ambient sensor signal circuit. Refer to MWI-49, "Diagnosis Procedure".

Is the inspection result normal?

YES >> GO TO 2.
NO >> Repair harness or connector.

2. CHECK AMBIENT SENSOR

Check the ambient sensor. Refer to MWI-49, "Component Inspection".

Is the inspection result normal?

YES >> Replace combination meter.
NO >> Replace ambient sensor.

NORMAL OPERATING CONDITION

INFORMATION DISPLAY

INFORMATION DISPLAY : Description

INFOID:0000000004504323

AMBIENT AIR TEMPERATURE

The displayed ambient air temperature on the information display may differ from the actual temperature because it is a corrected value calculated from the ambient sensor signal by the combination meter. Refer to MWI-26, "INFORMATION DISPLAY : System Description" for details on the correction process.

POSSIBLE DRIVING DISTANCE

The calculated possible driving distance may differ from the actual distance to empty if the refueling amount is approximately 15 ℓ (4 US gal, 3-3/10 Imp gal) or less. This is because the refuel control (moves the fuel gauge needle quicker than normal judging that the driver is refueling the vehicle) is not performed in such a case.

PRECAUTION

PRECAUTIONS

FOR USA AND CANADA

FOR USA AND CANADA : Precaution for Supplemental Restraint System (SRS) "AIR BAG" and "SEAT BELT PRE-TENSIONER"

INFOID:0000000004553957

The Supplemental Restraint System such as “AIR BAG” and “SEAT BELT PRE-TENSIONER”, used along with a front seat belt, helps to reduce the risk or severity of injury to the driver and front passenger for certain types of collision. This system includes seat belt switch inputs and dual stage front air bag modules. The SRS system uses the seat belt switches to determine the front air bag deployment, and may only deploy one front air bag, depending on the severity of a collision and whether the front occupants are belted or unbelted.
Information necessary to service the system safely is included in the “SRS AIRBAG” and “SEAT BELT” of this Service Manual.

WARNING:

- **To avoid rendering the SRS inoperative, which could increase the risk of personal injury or death in the event of a collision which would result in air bag inflation, all maintenance must be performed by an authorized NISSAN/INFINITI dealer.**
- **Improper maintenance, including incorrect removal and installation of the SRS, can lead to personal injury caused by unintentional activation of the system. For removal of Spiral Cable and Air Bag Module, see the “SRS AIRBAG”.**
- **Never use electrical test equipment on any circuit related to the SRS unless instructed to in this Service Manual. SRS wiring harnesses can be identified by yellow and/or orange harnesses or harness connectors.**

FOR MEXICO

FOR MEXICO : Precaution for Supplemental Restraint System (SRS) "AIR BAG" and "SEAT BELT PRE-TENSIONER"

INFOID:0000000004553958

The Supplemental Restraint System such as “AIR BAG” and “SEAT BELT PRE-TENSIONER”, used along with a front seat belt, helps to reduce the risk or severity of injury to the driver and front passenger for certain types of collision. Information necessary to service the system safely is included in the “SRS AIRBAG” and “SEAT BELT” of this Service Manual.

WARNING:

- **To avoid rendering the SRS inoperative, which could increase the risk of personal injury or death in the event of a collision which would result in air bag inflation, all maintenance must be performed by an authorized NISSAN/INFINITI dealer.**
- **Improper maintenance, including incorrect removal and installation of the SRS, can lead to personal injury caused by unintentional activation of the system. For removal of Spiral Cable and Air Bag Module, see the “SRS AIRBAG”.**
- **Do not use electrical test equipment on any circuit related to the SRS unless instructed to in this Service Manual. SRS wiring harnesses can be identified by yellow and/or orange harnesses or harness connectors.**

ON-VEHICLE REPAIR

COMBINATION METER

Exploded View

INFOID:0000000004504326

Refer to IP-12, "Exploded View".

Removal and Installation

INFOID:0000000004504327

Removal

1. Remove steering column cover. Refer to IP-20, "Removal and Installation".
2. Remove the cluster lid A. Refer to IP-20, "Removal and Installation".
3. Remove screw (A) and connector, and then remove combination meter.

B : Clip

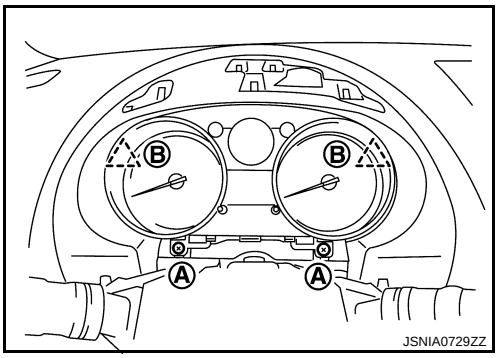

Installation

Install in the reverse order of removal.

Disassembly and Assembly

INFOID:0000000004512804

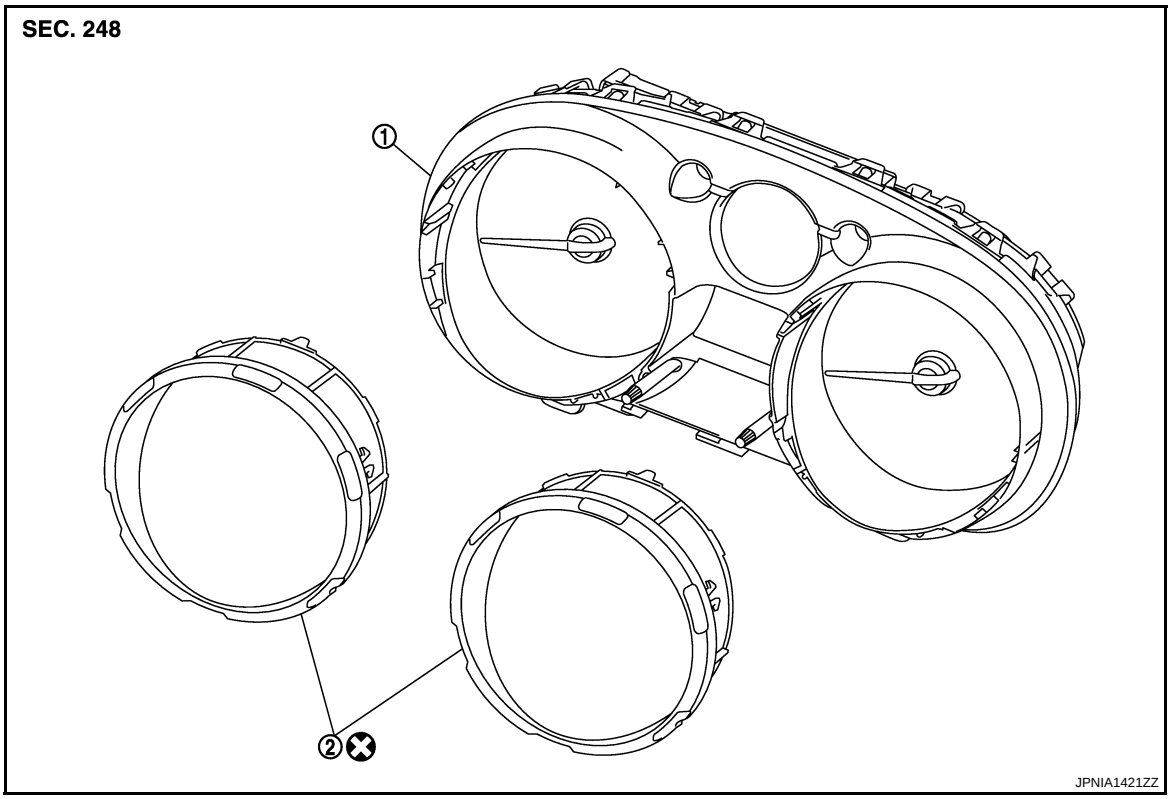

1. Unified meter control unit
2. Front cover and bezel

Refer to GI-3, "Contents" for symbols in the figure.

DISASSEMBLY

Disengage the tabs to separate front cover.

ASSEMBLY

Assemble in the reverse order of disassembly.