HEATER & AIR CONDITIONER

SECTION HA

CONTENTS

Supplemental Restraint System (SRS) "AIR BAG" and "SEAT BELT PRE-TENSIONER"

NIHA0001

The Supplemental Restraint System such as "AIR BAG" and "SEAT BELT PRE-TENSIONER" used along with a seat belt, helps to reduce the risk or severity of injury to the driver and front passenger for certain types of collision. The SRS system composition which is available to NISSAN B15 is as follows:

- For a frontal collision
  The Supplemental Restraint System consists of driver air bag module (located in the center of the steering wheel), front passenger air bag module (located on the instrument panel on passenger side), front seat belt pre-tensioners, a diagnosis sensor unit, warning lamp, wiring harness and spiral cable.
- For a side collision
  The Supplemental Restraint System consists of front side air bag module (located in the outer side of front seat), side air bag (satellite) sensor, diagnosis sensor unit (one of components of air bags for a frontal collision), wiring harness, warning lamp (one of components of air bags for a frontal collision).

Information necessary to service the system safely is included in the **RS section** of this Service Manual.

WARNING:

- **To avoid rendering the SRS inoperative, which could increase the risk of personal injury or death in the event of a collision which would result in air bag inflation, all maintenance should be performed by an authorized NISSAN dealer.**
- **Improper maintenance, including incorrect removal and installation of the SRS, can lead to personal injury caused by unintentional activation of the system. For removal of Spiral Cable and Air Bag Module, see the RS section.**
- **Do not use electrical test equipment on any circuit related to the SRS unless instructed to in this Service Manual. Spiral cable and wiring harnesses covered with yellow insulation tape just before the harness connectors or for the complete harness are related to the SRS.**

Precautions for Working with HFC-134a (R-134a)

NIHA0002

WARNING:

- **CFC-12 (R-12) refrigerant and HFC-134a (R-134a) refrigerant are not compatible. If the refrigerants are mixed and compressor failure is likely to occur. Refer to "CONTAMINATED REFRIGERANT" below. To determine the purity of HFC-134a (R-134a) in the vehicle and recovery tank, use Refrigerant Recovery/Recycling Recharging equipment (ACR4) (J-39500-NI) and Refrigerant Identifier.**
- **Use only specified lubricant for the HFC-134a (R-134a) A/C system and HFC-134a (R-134a) components. If lubricant other than that specified is used, compressor failure is likely to occur.**
- **The specified HFC-134a (R-134a) lubricant rapidly absorbs moisture from the atmosphere. The following handling precautions must be observed:**

a) When removing refrigerant components from a vehicle, immediately cap (seal) the component to minimize the entry of moisture from the atmosphere.

b) When installing refrigerant components to a vehicle, do not remove the caps (unseal) until just before connecting the components. Connect all refrigerant loop components as quickly as possible to minimize the entry of moisture into system.

c) Only use the specified lubricant from a sealed container. Immediately reseal containers of lubricant. Without proper sealing, lubricant will become moisture saturated and should not be used.

d) Avoid breathing A/C refrigerant and lubricant vapor or mist. Exposure may irritate eyes, nose and throat. Remove R-134a from the A/C system, using certified service equipment meeting requirements of SAE J2210 (R-134a recycling equipment), or J2209 (R-134a recovery equipment). If accidental system discharge occurs, ventilate work area before resuming service. Additional health and safety information may be obtained from refrigerant and lubricant manufacturers.

e) Do not allow lubricant (Nissan A/C System Oil Type R) to come in contact with styrofoam parts. Damage may result.

Contaminated Refrigerant

NIHA0099

If a refrigerant other than pure R-134a is identified in a vehicle, your options are:

- Explain to the customer that environmental regulations prohibit the release of contaminated refrigerant into the atmosphere.
- Explain that recovery of the contaminated refrigerant could damage your service equipment and refrigerant supply.
- Suggest the customer return the vehicle to the location of previous service where the contamination may have occurred.
- If you choose to perform the repair, recover the refrigerant using only **dedicated equipment and containers. Do not recover contaminated refrigerant into your existing service equipment.** If your facility does not have dedicated recovery equipment, you may contact a local refrigerant product retailer for available service. This refrigerant must be disposed of in accordance with all federal and local regulations. In addition, replacement of all refrigerant system components on the vehicle is recommended.
- If the vehicle is within the warranty period, the air conditioner warranty is void. Please contact Nissan Customer Affairs for further assistance.

General Refrigerant Precautions

NIHA0003

WARNING:

- **Do not release refrigerant into the air. Use approved recovery/recycling equipment to capture the refrigerant every time an air conditioning system is discharged.**
- **Always wear eye and hand protection (goggles and gloves) when working with any refrigerant or air conditioning system.**
- **Do not store or heat refrigerant containers above 52°C (125°F).**
- **Do not heat a refrigerant container with an open flame; if container warming is required, place the bottom of the container in a warm pail of water.**
- **Do not intentionally drop, puncture, or incinerate refrigerant containers.**
- **Keep refrigerant away from open flames: poisonous gas will be produced if refrigerant burns.**
- **Refrigerant will displace oxygen, therefore be certain to work in well ventilated areas to prevent suffocation.**
- **Do not pressure test or leak test HFC-134a (R-134a) service equipment and/or vehicle air conditioning systems with compressed air during repair. Some mixtures of air and R-134a have been shown to be combustible at elevated pressures. These mixtures, if ignited, may cause injury or property damage. Additional health and safety information may be obtained from refrigerant manufacturers.**

Precautions for Leak Detection Dye

NIHA0091

- The A/C system contains a fluorescent leak detection dye used for locating refrigerant leaks. An ultraviolet (UV) lamp is required to illuminate the dye when inspecting for leaks.
- Always wear fluorescence enhancing UV safety glasses to protect your eyes and enhance the visibility of the fluorescent dye.
- A compressor shaft seal should not be repaired because of dye seepage. The compressor shaft seal should only be repaired after confirming the leak with an electronic refrigerant leak detector (J-41995).
- Always remove any dye from the leak area after repairs are complete to avoid a misdiagnosis during a future service.
- Do not allow dye to come into contact with painted body panels or interior components. If dye is spilled, clean immediately with the approved dye cleaner. Fluorescent dye left on a surface for an extended period of time **cannot be removed**.
- Do not spray the fluorescent dye cleaning agent on hot surfaces (engine exhaust manifold, etc.).
- Do not use more than one refrigerant dye bottle (1/4 ounce / 7.4 cc) per A/C system.
- Leak detection dyes for R-134a and R-12 A/C systems are different. Do not use R-134a leak detection

dye in R-12 A/C systems or R-12 leak detection dye in R-134a A/C systems or A/C system damage may result.

- The fluorescent properties of the dye will remain for over three (3) years unless a compressor failure occurs.

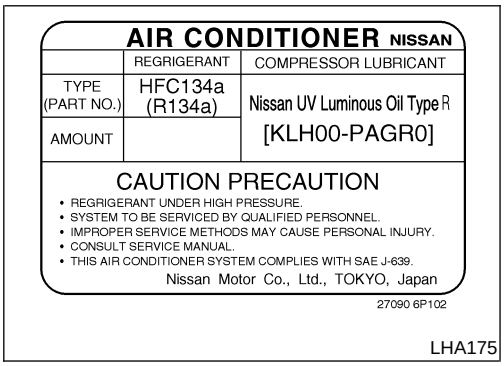

A/C Identification Label

NIHA0092

Vehicles with factory installed fluorescent dye have this identification label on the under side of hood.

NOTE:
Vehicles with factory installed fluorescent dye have a green label.
Vehicles without factory installed fluorescent dye have a blue label.

Precautions for Refrigerant Connection

NIHA0004

A new type refrigerant connection has been introduced to all refrigerant lines except the following portion.

- Expansion valve to cooling unit

FEATURES OF NEW TYPE REFRIGERANT CONNECTION

NIHA0004S01

- The O-ring has been relocated. It has also been provided with a groove for proper installation. This eliminates the chance of the O-ring being caught in, or damaged by, the mating part. The sealing direction of the O-ring is now set vertically in relation to the contacting surface of the mating part to improve sealing characteristics.
- The reaction force of the O-ring will not occur in the direction that causes the joint to pull out, thereby facilitating piping connections.

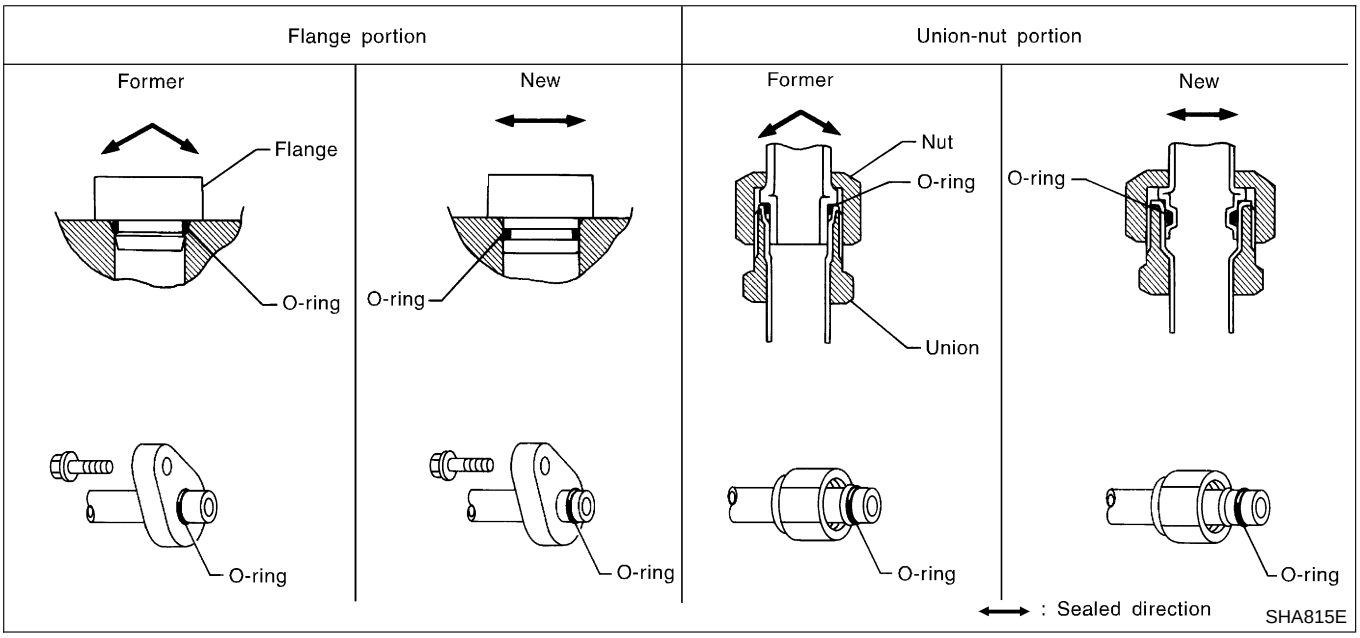

O-RING AND REFRIGERANT CONNECTION

NIHA0004S02

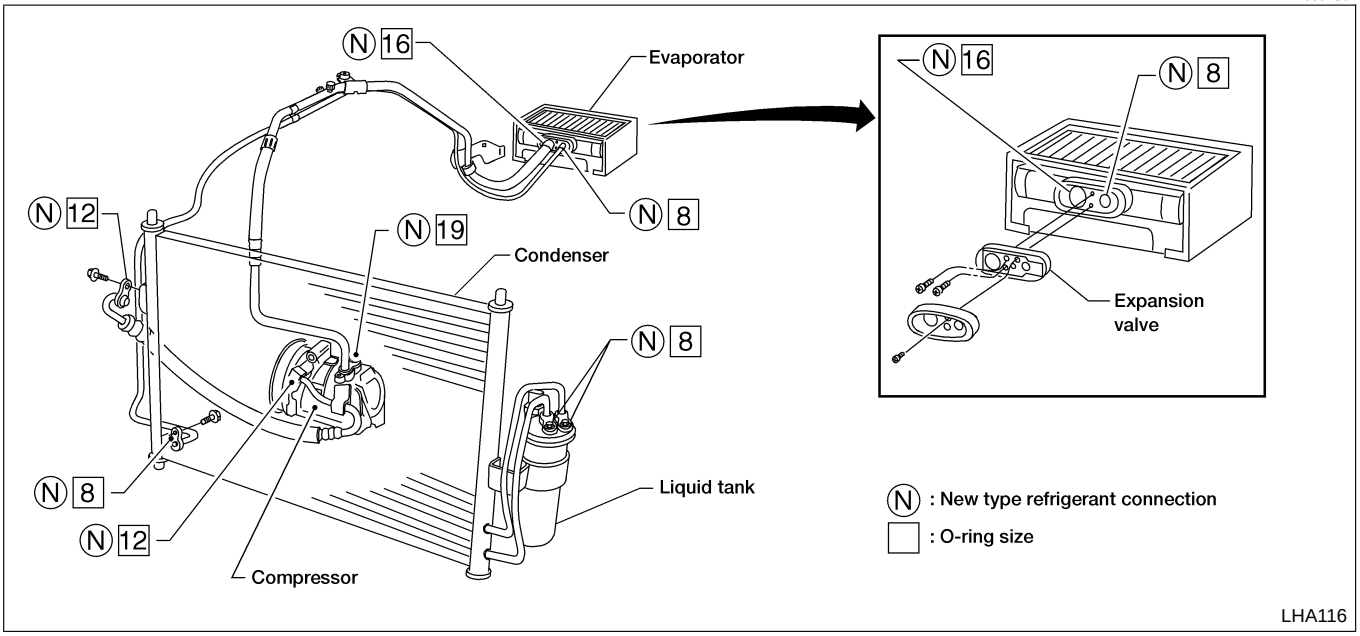

CAUTION:

The new and former refrigerant connections in some systems use different O-ring configurations. Do not confuse O-rings since they are not interchangeable. If a wrong O-ring is installed, refrigerant will leak at, or around, the connection.

O-Ring Part Numbers and Specifications

NIHA0004S0201

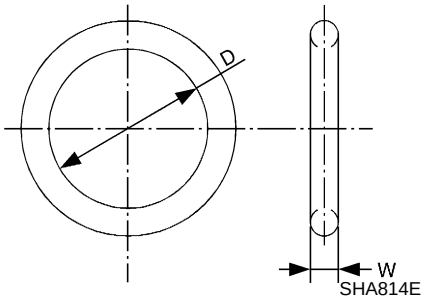

Connection type	O-ring size	Part number*	D mm (in)	W mm (in)
New	8	92471 N8210	6.8 (0.268)	1.85 (0.0728)
New	12	92472 N8210	10.9 (0.429)	2.43 (0.0957)
New	16	92473 N8210	13.6 (0.535)	2.43 (0.0957)
New	19	92474 N8210	16.5 (0.650)	2.43 (0.0957)

*: Always check with the Parts Department for the latest parts information.

WARNING:

Make sure all refrigerant is discharged into the recycling equipment and the pressure in the system is less than atmospheric pressure. Then gradually loosen the discharge side hose fitting and remove it.

CAUTION:

When replacing or cleaning refrigerant cycle components, observe the following.

- **When the compressor is removed, store it in the same position as it is when mounted on the car. Failure to do so will cause lubricant to enter the low pressure chamber.**
- **When connecting tubes, always use a torque wrench and a back-up wrench.**
- **After disconnecting tubes, immediately plug all openings to prevent entry of dirt and moisture.**
- **When installing an air conditioner in the vehicle, connect the pipes as the final stage of the operation. Do not remove the seal caps of pipes and other components until just before required for connection.**
- **Allow components stored in cool areas to warm to working area temperature before removing seal caps. This prevents condensation from forming inside A/C components.**
- **Thoroughly remove moisture from the refrigeration system before charging the refrigerant.**
- **Always replace used O-rings.**

- **When connecting tube, apply lubricant to circle of the O-rings shown in illustration. Be careful not to apply lubricant to threaded portion.**
  Lubricant name: Nissan A/C System Oil Type R
  Part number: KLH00-PAGR0
- **O-ring must be closely attached to dented portion of tube.**
- **When replacing the O-ring, be careful not to damage O-ring and tube.**
- **Connect tube until you hear it click, then tighten the nut or bolt by hand until snug. Make sure that the O-ring is installed to tube correctly.**
- **After connecting line, conduct leak test and make sure that there is no leakage from connections. When the gas leaking point is found, disconnect that line and replace the O-ring. Then tighten connections of seal seat to the specified torque.**

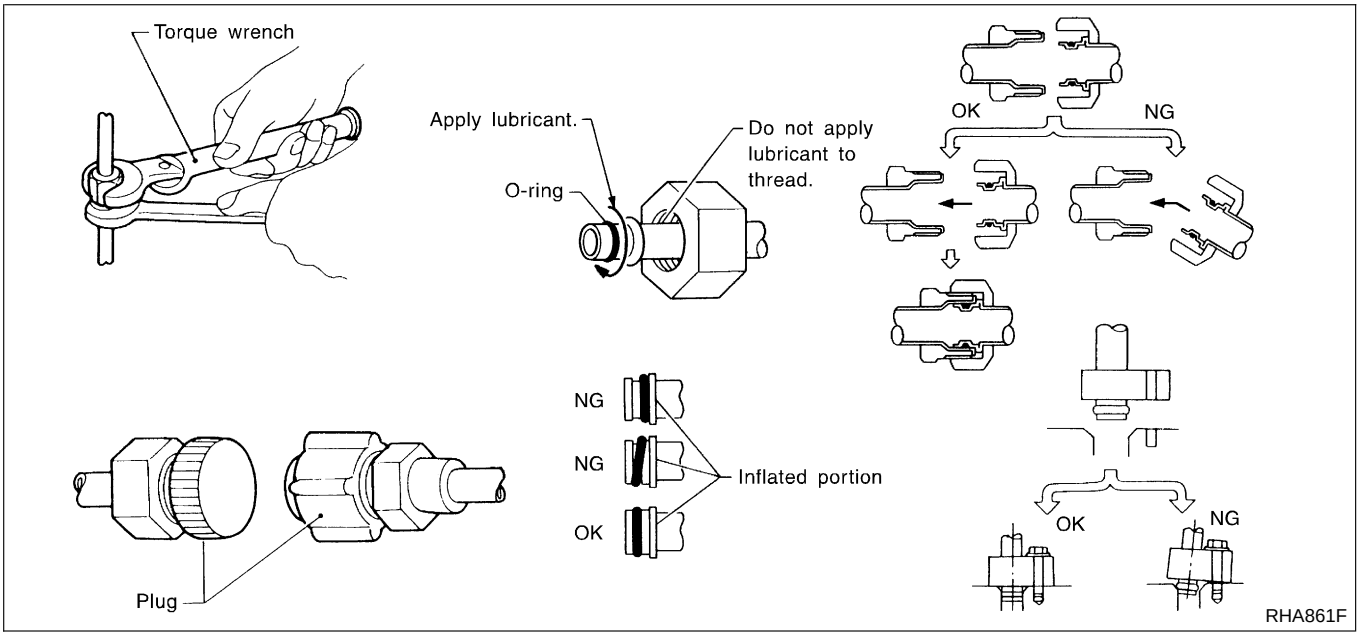

Precautions for Servicing Compressor

NIHA0005

- **Plug all openings to prevent moisture and foreign matter from entering.**
- **When the compressor is removed, store it in the same position as it is when mounted on the car.**
- **When replacing or repairing compressor, follow "Maintenance of Lubricant Quantity in Compressor" exactly. Refer to HA-63.**
- **Keep friction surfaces between clutch and pulley clean. If the surface is contaminated, with lubricant, wipe it off by using a clean waste cloth moistened with thinner.**
- **After compressor service operation, turn the compressor shaft by hand more than five turns in both directions. This will equally distribute lubricant inside the compressor. After the compressor is installed, let the engine idle and operate the compressor for one hour.**
- **After replacing the compressor magnet clutch, apply voltage to the new one and check for normal operation. [Gap between clutch disc and pulley is 0.3 - 0.6 mm (0.012 - 0.024 in)]**

Precautions for Service Equipment

NIHA0006

RECOVERY/RECYCLING EQUIPMENT

NIHA0006S01

Follow the manufacturer's instructions for machine operation and machine maintenance. Never introduce any refrigerant other than that specified into the machine.

ELECTRONIC LEAK DETECTOR

NIHA0006S02

Follow the manufacturer's instructions for tester operation and tester maintenance.

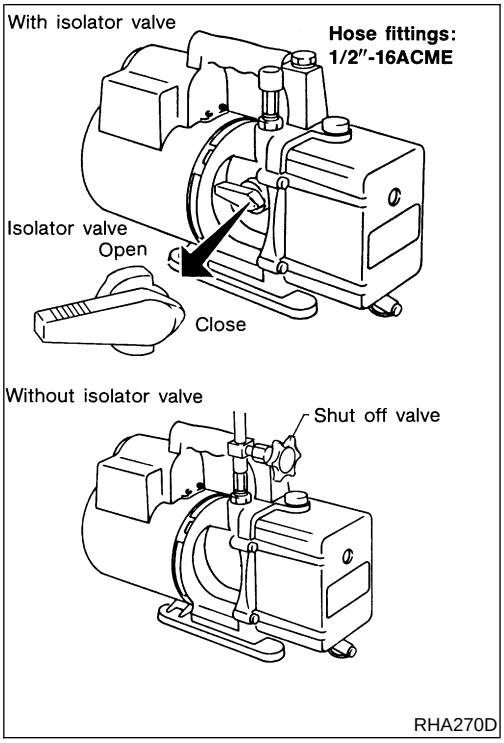

VACUUM PUMP

NIHA0006S03

The lubricant contained inside the vacuum pump is not compatible with the specified lubricant for HFC-134a (R-134a) A/C systems. The vent side of the vacuum pump is exposed to atmospheric pressure. So the vacuum pump lubricant may migrate out of the pump into the service hose. This is possible when the pump is switched off after evacuation (vacuuming) and hose is connected to it.

To prevent this migration, use a manual valve situated near the hose-to-pump connection, as follows.

- Usually vacuum pumps have a manual isolator valve as part of the pump. Close this valve to isolate the service hose from the pump.
- For pumps without an isolator, use a hose equipped with a manual shut-off valve near the pump end. Close the valve to isolate the hose from the pump.
- If the hose has an automatic shut off valve, disconnect the hose from the pump: as long as the hose is connected, the valve is open and lubricating oil may migrate.

Some one-way valves open when vacuum is applied and close under a no vacuum condition. Such valves may restrict the pump's ability to pull a deep vacuum and are not recommended.

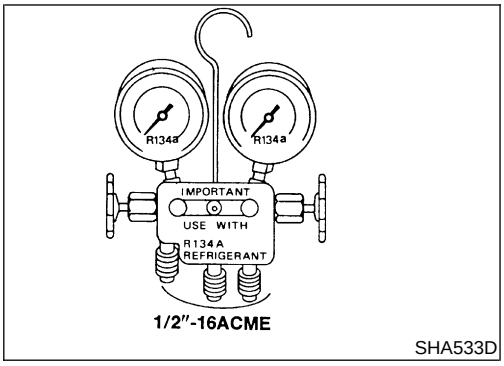

MANIFOLD GAUGE SET

NIHA0006S04

Be certain that the gauge face indicates R-134a or 134a. Make sure the gauge set has 1/2″-16 ACME threaded connections for service hoses. Confirm the set has been used only with refrigerant HFC-134a (R-134a) along with specified lubricant.

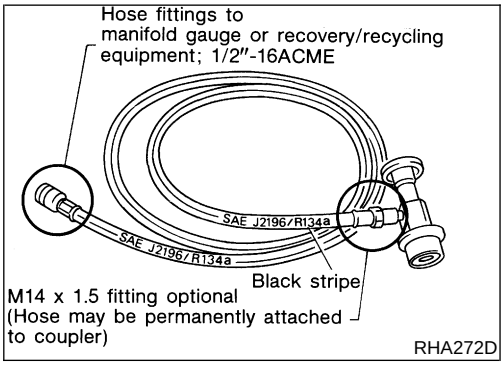

SERVICE HOSES

NIHA0006S05

Be certain that the service hoses display the markings described (colored hose with black stripe). All hoses must include positive shut off devices (either manual or automatic) near the end of the hoses opposite the manifold gauge.

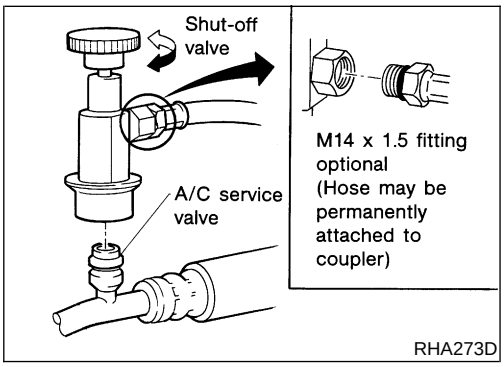

SERVICE COUPLERS

NIHA0006S06

Never attempt to connect HFC-134a (R-134a) service couplers to an CFC-12 (R-12) A/C system. The HFC-134a (R-134a) couplers will not properly connect to the CFC-12 (R-12) system. However, if an improper connection is attempted, discharging and contamination may occur.

Shut-off valve rotation	A/C service valve
Clockwise	Open
Counterclockwise	Close

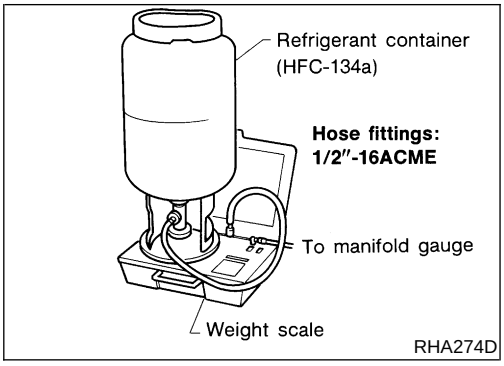

REFRIGERANT WEIGHT SCALE

NIHA0006S07

Verify that no refrigerant other than HFC-134a (R-134a) and specified lubricants have been used with the scale. If the scale controls refrigerant flow electronically, the hose fitting must be 1/2″-16 ACME.

CALIBRATING ACR4 WEIGHT SCALE

NIHA0006S08

Calibrate the scale every three months.

To calibrate the weight scale on the ACR4 (J-39500-NI):

1. Press **Shift/Reset** and **Enter** at the same time.
2. Press **8787**. "**A1**" will be displayed.
3. Remove all weight from the scale.
4. Press **0**, then press **Enter**. "**0.00**" will be displayed and change to "**A2**".
5. Place a known weight (dumbbell or similar weight), between 4.5 and 36.3 kg (10 and 80 lb) on the center of the weight scale.
6. Enter the known weight using four digits. (Example 10 lbs = 10.00, 10.5 lbs = 10.50)
7. Press **Enter** — the display returns to the vacuum mode.
8. Press **Shift/Reset** and **Enter** at the same time.
9. Press **6** — the known weight on the scale is displayed.
10. Remove the known weight from the scale. "**0.00**" will be displayed.
11. Press **Shift/Reset** to return the ACR4 to the program mode.

CHARGING CYLINDER

NIHA0006S09

Using a charging cylinder is not recommended. Refrigerant may be vented into air from cylinder's top valve when filling the cylinder with refrigerant. Also, the accuracy of the cylinder is generally less than that of an electronic scale or of quality recycle/recharge equipment.

Wiring Diagrams and Trouble Diagnosis

NIHA0007

When you read wiring diagrams, refer to the following:

- ***GI-11***, "HOW TO READ WIRING DIAGRAMS"
- ***EL-11***, "Wiring Diagram — POWER —"

When you perform trouble diagnosis, refer to the following:

- ***GI-34***, "How to Follow Trouble Diagnoses"
- ***GI-24***, "HOW TO PERFORM EFFICIENT DIAGNOSIS FOR AN ELECTRICAL INCIDENT"

Special Service Tools

NIHA0008

The actual shapes of Kent-Moore tools may differ from those of special service tools illustrated here.

Tool number (Kent-Moore No.) Tool name	Description
KV99234330 (J-38873) Pulley installer	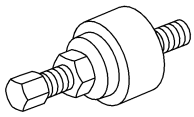 LHA171 Installing pulley
KV99233130 (J-29884) (with small adapter) Pulley puller	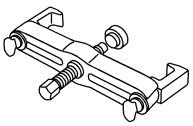 LHA172 Removing pulley

HFC-134a (R-134a) Service Tools and Equipment

=NIHA0009

Never mix HFC-134a refrigerant and/or its specified lubricant with CFC-12 (R-12) refrigerant and/or its lubricant.
Separate and non-interchangeable service equipment must be used for handling each type of refrigerant/lubricant.
Refrigerant container fittings, service hose fittings and service equipment fittings (equipment which handles refrigerant and/or lubricant) are different between CFC-12 (R-12) and HFC-134a (R-134a). This is to avoid mixed use of the refrigerants/lubricant.
Adapters that convert one size fitting to another must never be used: refrigerant/lubricant contamination will occur and compressor failure will result.

Tool number (Kent-Moore No.) Tool name	Description	
HFC-134a (R-134a) refrigerant	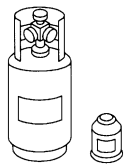 NT196	Container color: Light blue Container marking: HFC-134a (R-134a) Fitting size: Thread size ● Large container 1/2″-16 ACME
KLH00-PAGR0 (—) Nissan A/C System Oil Type R	 NT197	Type: Poly alkylene glycol oil (PAG), type R Application: HFC-134a (R-134a) vane rotary compressors (Nissan only) Lubricity: 40 mℓ (1.4 US fl oz, 1.4 Imp fl oz)
(J-39500-NI) Recovery/Recycling Recharging equipment (ACR4)	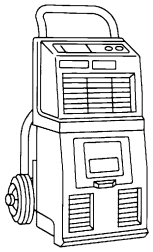 NT195	Function: Refrigerant Recovery and Recycling and Recharging
(J-41995) Electronic refrigerant leak detector	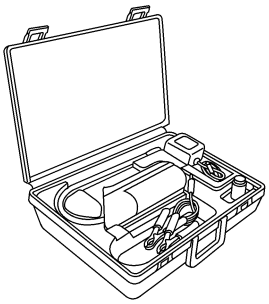 AHA281A	Power supply: ● DC 12V (Cigarette lighter)

Tool number (Kent-Moore No.) Tool name	Description	
(J-43926) Refrigerant dye leak detection kit Kit includes: (J-42220) UV lamp and UV safety glasses (J-41459) Refrigerant dye injector (J-41447) Qty. 24 R-134a refrigerant dye (J-43872) Refrigerant dye cleaner	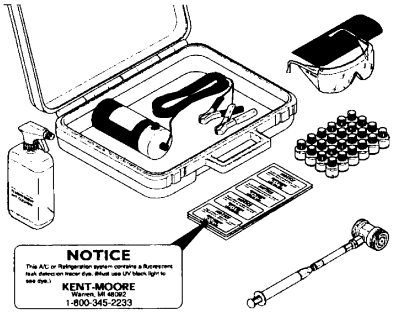 LHA176	Power supply: DC 12V (Battery terminal)
(J-42220) Fluorescent dye leak detector	 LHA177	Power supply: DC12V (Battery terminal) For checking refrigerant leak when fluorescent dye is installed in A/C system Includes: UV lamp and UV safety glasses
(J-41447) R134a fluorescent leak detection dye (Box of 24, 1/4 ounce bottles)	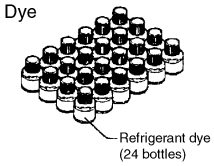 LHA178	Application: For R-134a PAG oil Container: 1/4 ounce (7.4 cc) bottle (Includes self-adhesive dye identification labels for affixing to vehicle after charging system with dye)
(J-41459) R134a dye injector Use with J-41447, 1/4 ounce bottle	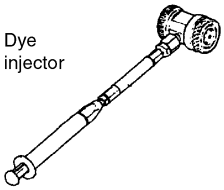 LHA179	For injecting 1/4 ounce of Fluorescent Leak Detection Dye into A/C system
(J-43872) Dye cleaner	 LHA180	For cleaning dye spills
(J39183-C) Manifold gauge set (with hoses and couplers)	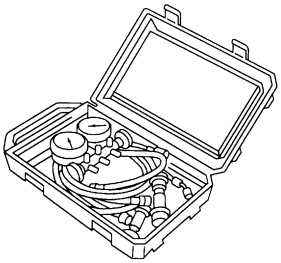 NT199	Identification: ● The gauge face indicates R-134a. Fitting size: Thread size ● 1/2″-16 ACME

HFC-134a (R-134a) Service Tools and Equipment (Cont'd)

Tool number (Kent-Moore No.) Tool name	Description	
Service hoses ● High side hose (J-39500-72B) ● Low side hose (J-39500-72R) ● Utility hose (J-39500-72Y)	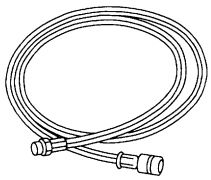 NT201	Hose color: ● Low side hose: Blue with black stripe ● High side hose: Red with black stripe ● Utility hose: Yellow with black stripe or green with black stripe Hose fitting to gauge: ● 1/2″-16 ACME
Service couplers ● High side coupler (J-39500-20A) ● Low side coupler (J-39500-24A)	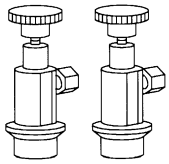 NT202	Hose fitting to service hose: ● M14 x 1.5 fitting is optional or permanently attached
(J-39699) Refrigerant weight scale	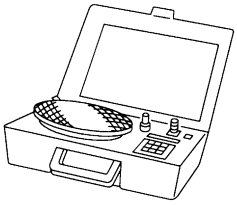 NT200	For measuring of refrigerant Fitting size: Thread size ● 1/2″-16 ACME
(J-39649) Vacuum pump (Including the isolator valve)	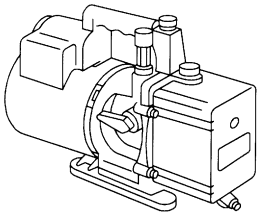 NT203	Capacity: ● Air displacement: 4 CFM ● Micron rating: 20 microns ● Oil capacity: 482 g (17 oz) Fitting size: Thread size ● 1/2″-16 ACME

COMMERCIAL SERVICE TOOL

=NIHA0009S01

Tool name	Description
(J-41810-NI) Refrigerant identifier equipment (R-134a)	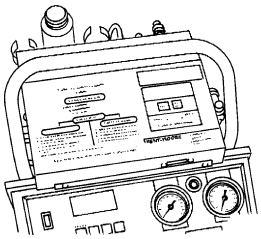 NT765 For checking refrigerant purity and for system contamination
— (J-44614) Clutch disc holding tool	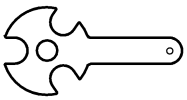 WHA230 Clutch disc holding tool

Refrigeration System

REFRIGERATION CYCLE

NIHA0010

Refrigerant Flow

NIHA0010S01

The refrigerant flows in the standard pattern, that is, through the compressor, the condenser, the liquid tank, through the evaporator, and back to the compressor. The refrigerant evaporation through the evaporator coil is controlled by an externally equalized expansion valve, located inside the evaporator case.

Freeze Protection

NIHA0010S02

The compressor cycles go on and off to maintain the evaporator temperature within a specified range. When the evaporator coil temperature falls below a specified point, the thermo control amplifier interrupts the compressor operation. When the evaporator coil temperature rises above the specification, the thermo control amplifier allows compressor operation.

Refrigerant System Protection

NIHA0010S03

Refrigerant Pressure Sensor

NIHA0010S0301

The refrigerant system is protected against excessively high or low pressures by the refrigerant pressure sensor, located on the liquid tank. If the system pressure rises above, or falls below the specifications, the refrigerant pressure sensor detects the pressure inside the refrigerant line and sends the voltage signal to the ECM/PCM. ECM/PCM makes the A/C relay go OFF and stops the compressor when pressure on the high pressure side detected by refrigerant pressure sensor is over about 2,746 kPa (28 kg/cm^2, 398 psi) or below about 177 kPa (1.8 kg/cm^2, 26 psi).

Pressure Relief Valve

NIHA0010S0302

The refrigerant system is also protected by a pressure relief valve, located in the rear head of the compressor. When the pressure of refrigerant in the system increases to an abnormal level [more than 3,727 kPa (38 kg/cm^2, 540 psi)], the release port on the pressure relief valve automatically opens and releases refrigerant into the atmosphere.

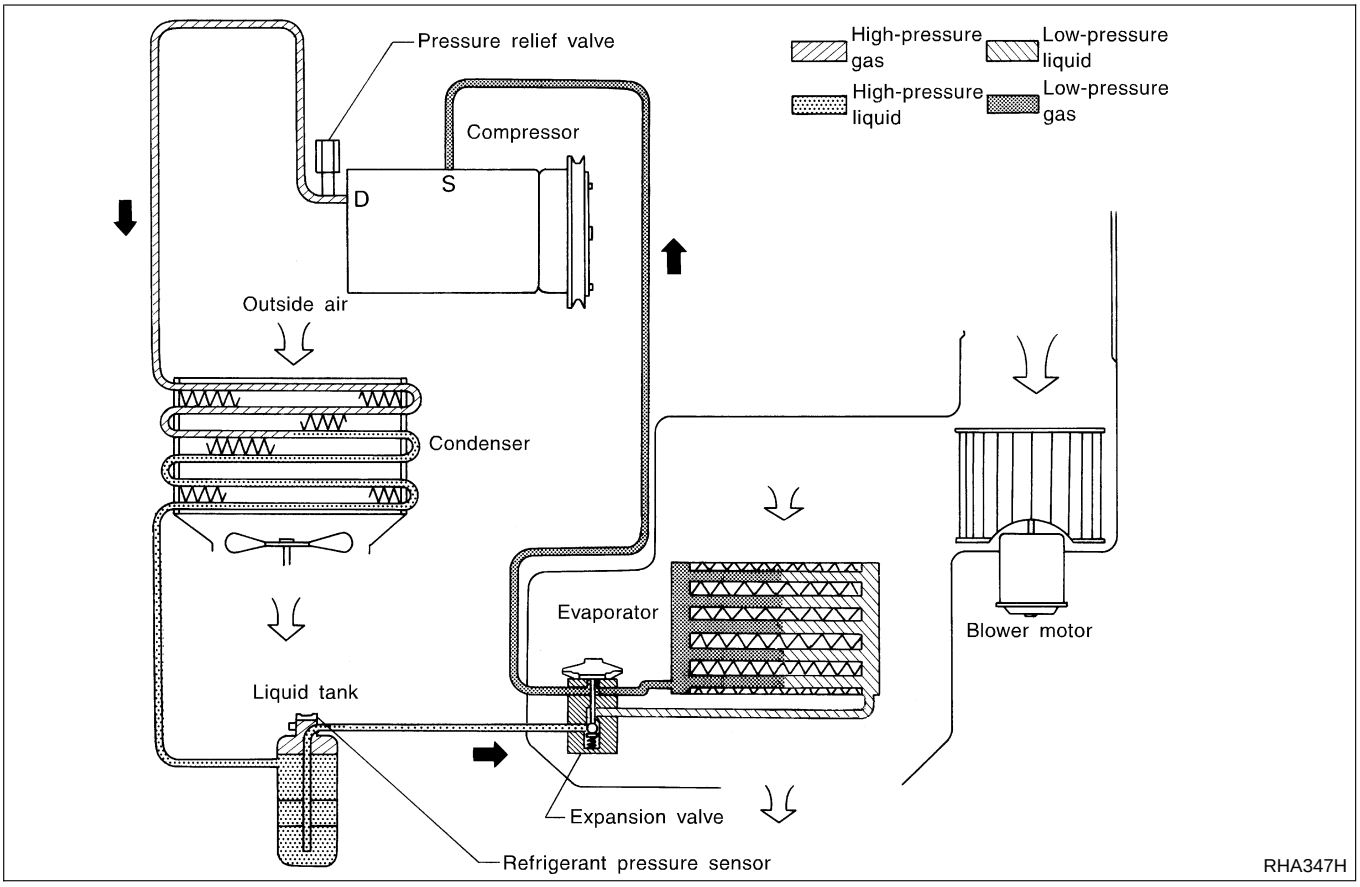

Component Layout

NIHA0011

SEC. 270•271•272•273

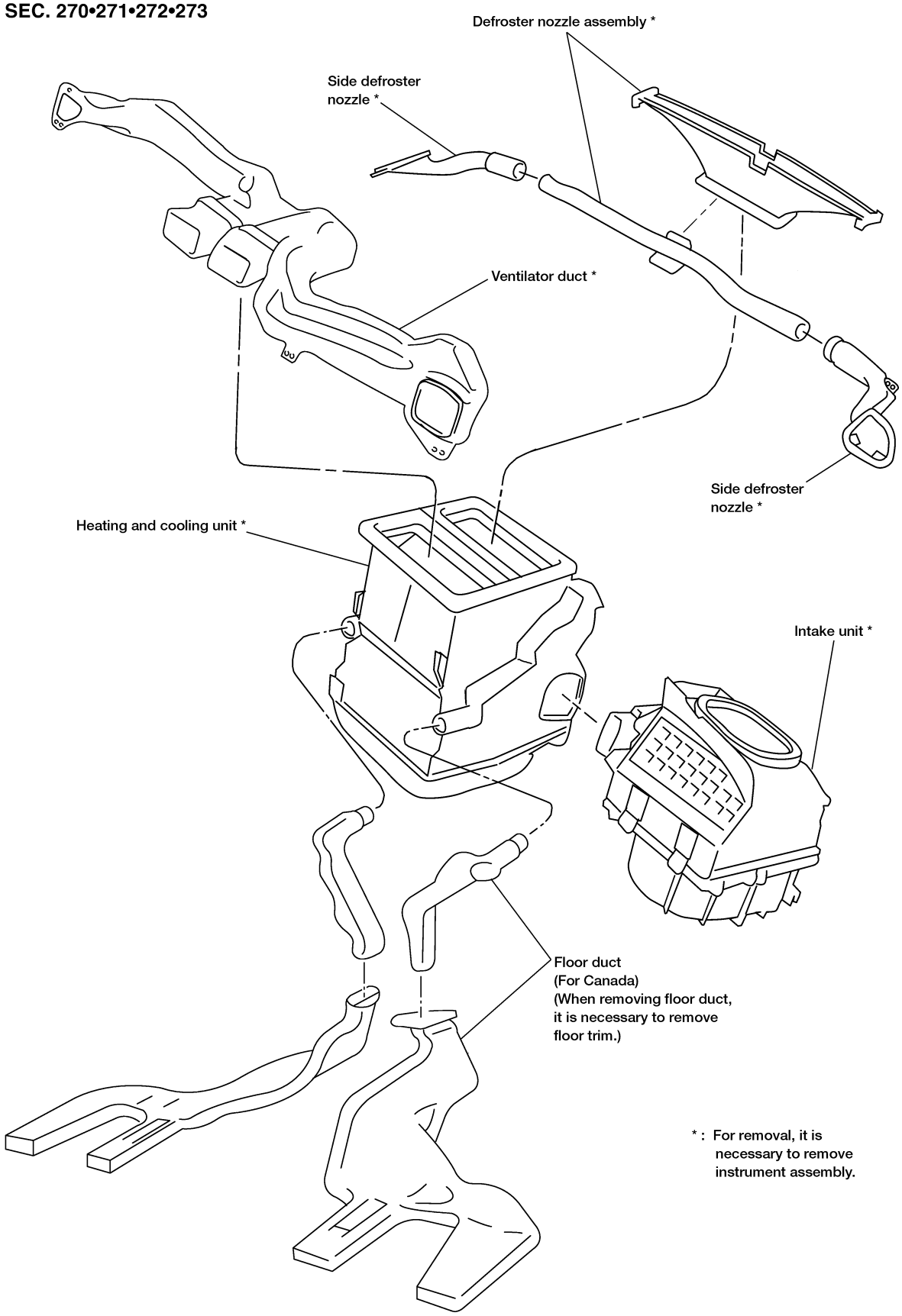

LHA123

Control Operation

NIHA0012

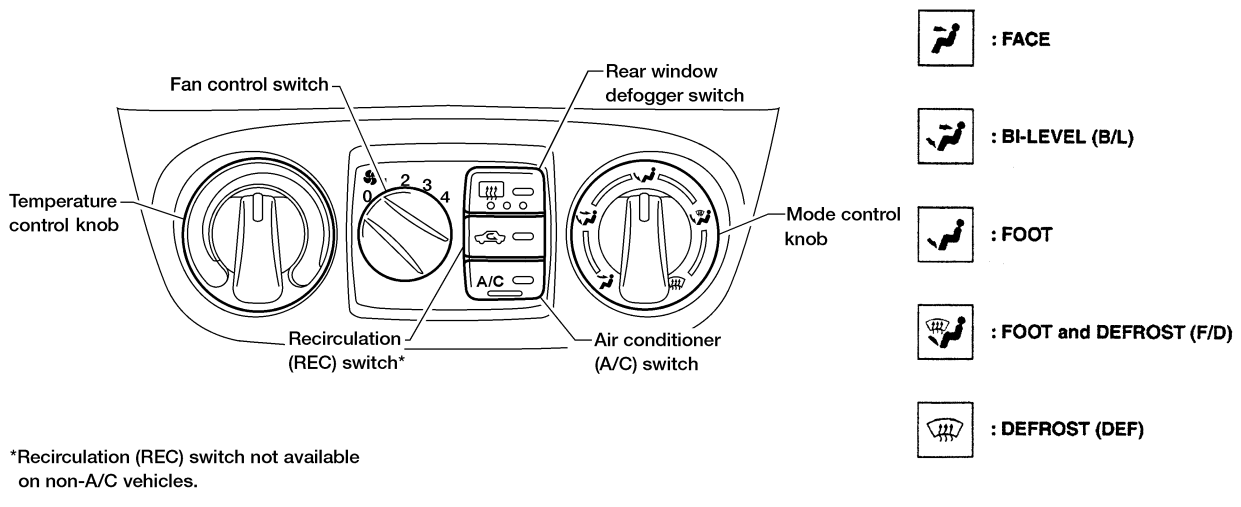

FAN CONTROL SWITCH

NIHA0012S01

This switch turns the fan ON and OFF, and controls fan speed.

REAR WINDOW DEFOGGER SWITCH

NIHA0012S06

This switch turns the rear window defogger ON and OFF.

MODE CONTROL KNOB

NIHA0012S02

This control knob controls the outlet air flow.
When DEF or F/D mode is selected, the push control unit sets the intake door to FRESH.
The compressor turns on when DEF mode is selected.

TEMPERATURE CONTROL KNOB

NIHA0012S03

This knob adjusts the temperature of the discharge air.

RECIRCULATION (REC) SWITCH

NIHA0012S04

OFF position: Outside air is drawn into the passenger compartment.
ON position: Interior air is recirculated inside the vehicle.
The indicator lamp will also light.
Recirculation is canceled when DEF or F/D mode is selected, and resumes when another mode is chosen.

AIR CONDITIONER (A/C) SWITCH

NIHA0012S05

The air conditioner switch controls the A/C system. When the switch is depressed with the fan ON, the compressor will turn ON. The indicator lamp will also light.
The air conditioner cooling function operates only when the engine is running.

Discharge Air Flow

NIHA0013

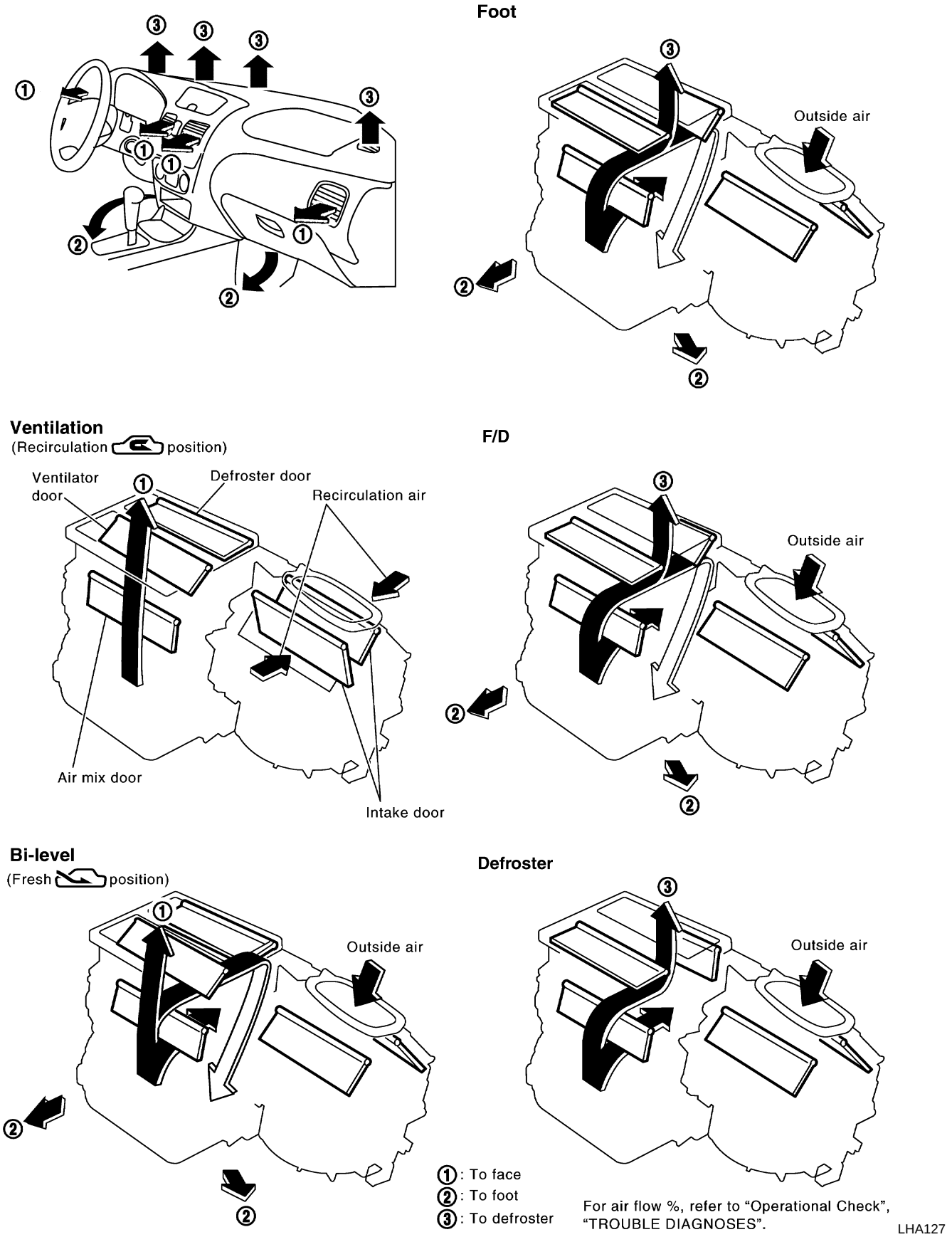

System Description

NIHA0014

SWITCHES AND THEIR CONTROL FUNCTIONS

NIHA0014S01

Knob/Switch		Knob/Switch position							Air outlet	Intake air	Compressor
		A/C									
A/C		○							—	—	ON*1
Mode			○						VENT	—	—
				○					B/L	—	—
					○				FOOT	—	—
						○			F/D	FRE	—
							○		DEF	FRE	ON*1
								○	—	REC*2	—

*1: Compressor is operated by ECM/PCM.

*2: In DEF and F/D modes, REC switch is canceled.

Component Location

NIHA0015

ENGINE COMPARTMENT

NIHA0015S01

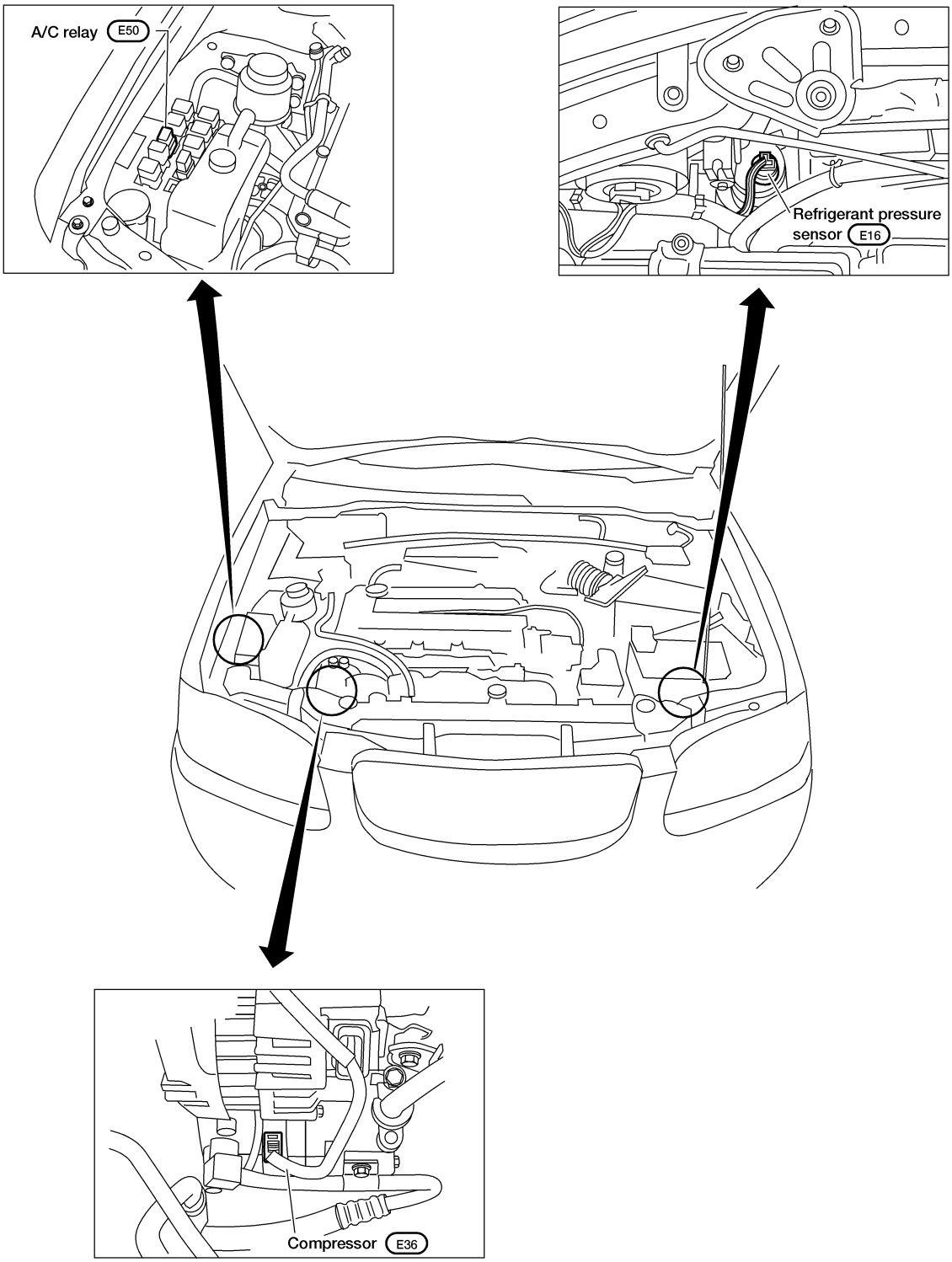

LHA117

PASSENGER COMPARTMENT

NIHA0015S02

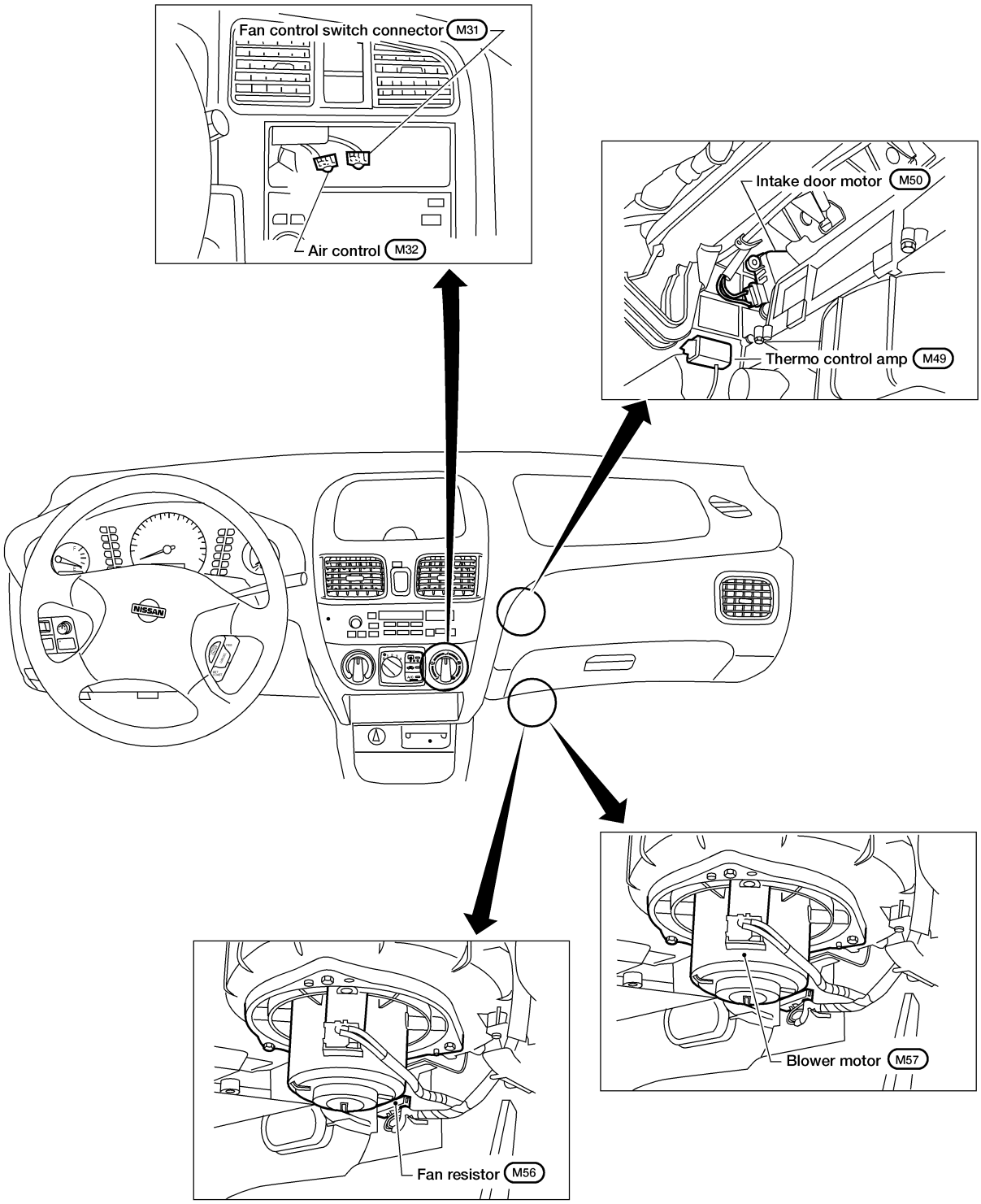

LHA118

Circuit Diagram — Air Conditioner

NIHA0016

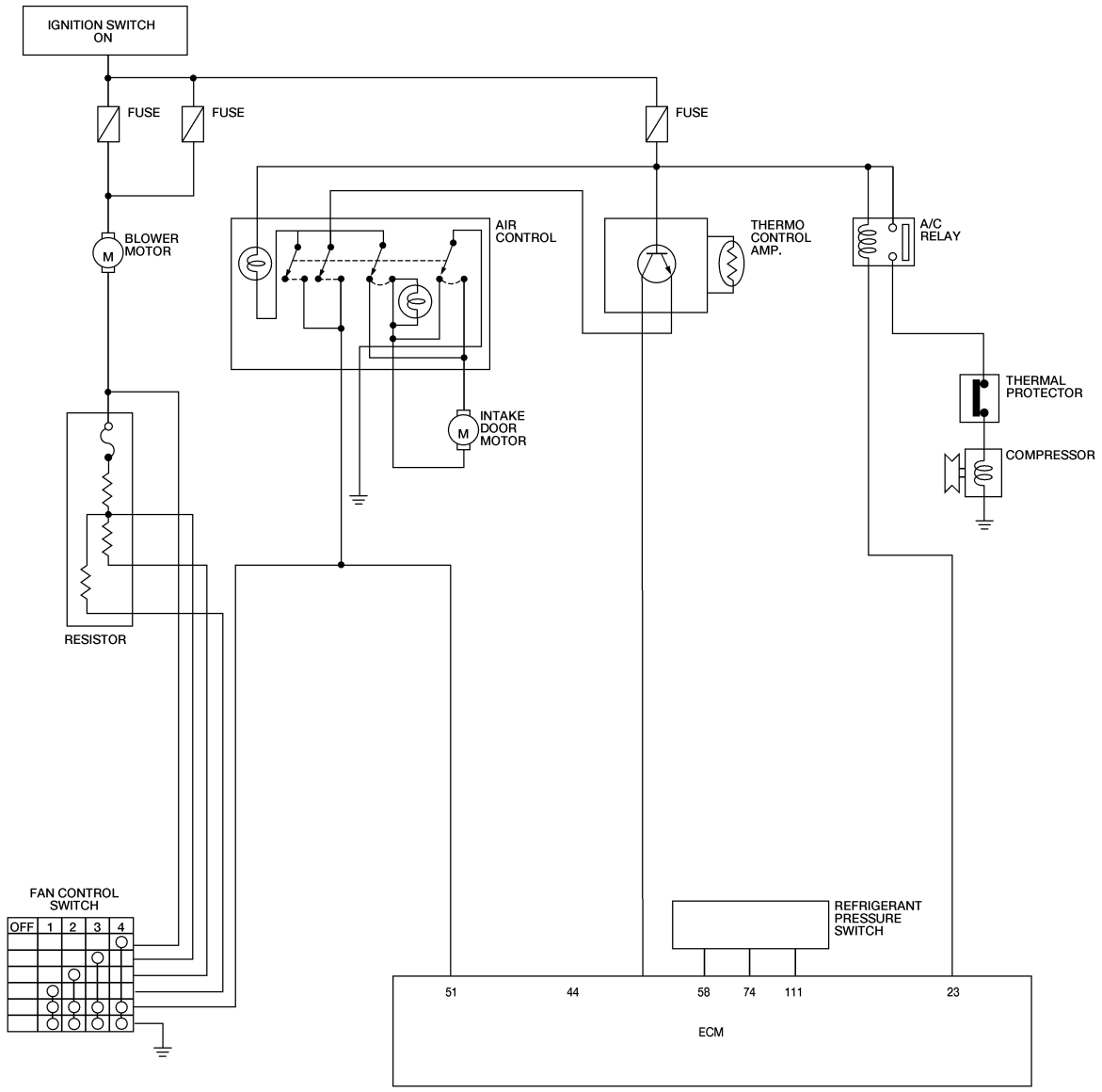

WHA253

Wiring Diagram — Heater —

NIHA0074

HA-HEATER-01

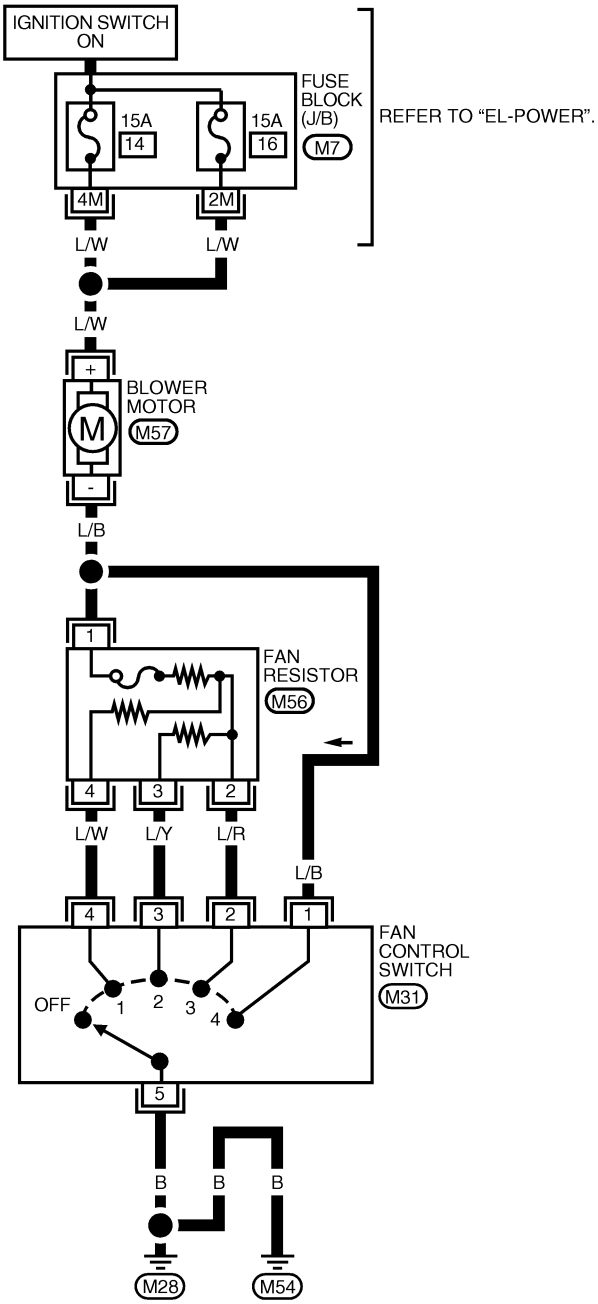

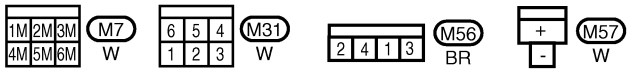

WHA105

Wiring Diagram — A/C, M —

NIHA0017

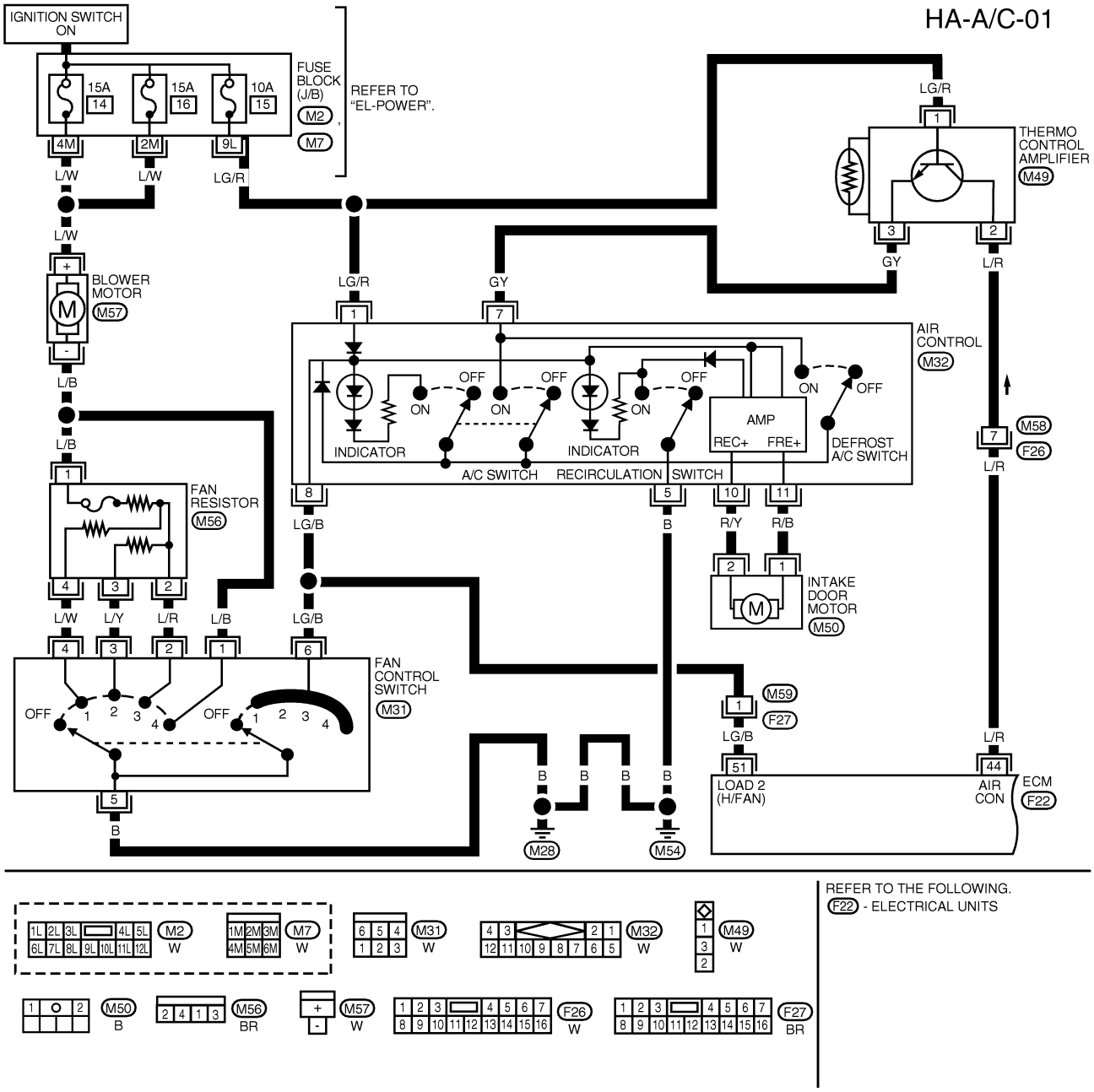

WHA254

ECM/PCM TERMINALS AND REFERENCE VALUE MEASURED BETWEEN EACH TERMINAL AND GROUND

TERMINAL	WIRE COLOR	ITEM	CONDITION	DATA (DC)
44	L/R	AIR CONDITIONER SWITCH SIGNAL	BOTH A/C SWITCH AND BLOWER SWITCH "ON" (ENGINE RUNNING)	APPROX. 0V
			A/C SWITCH "OFF" (ENGINE RUNNING)	BATTERY VOLTAGE
51	LG/B	FAN CONTROL SWITCH	FAN CONTROL SWITCH "ON" (ENGINE RUNNING)	APPROX. 0V
			FAN CONTROL SWITCH "OFF" (ENGINE RUNNING)	APPROX. 5V

LHA169

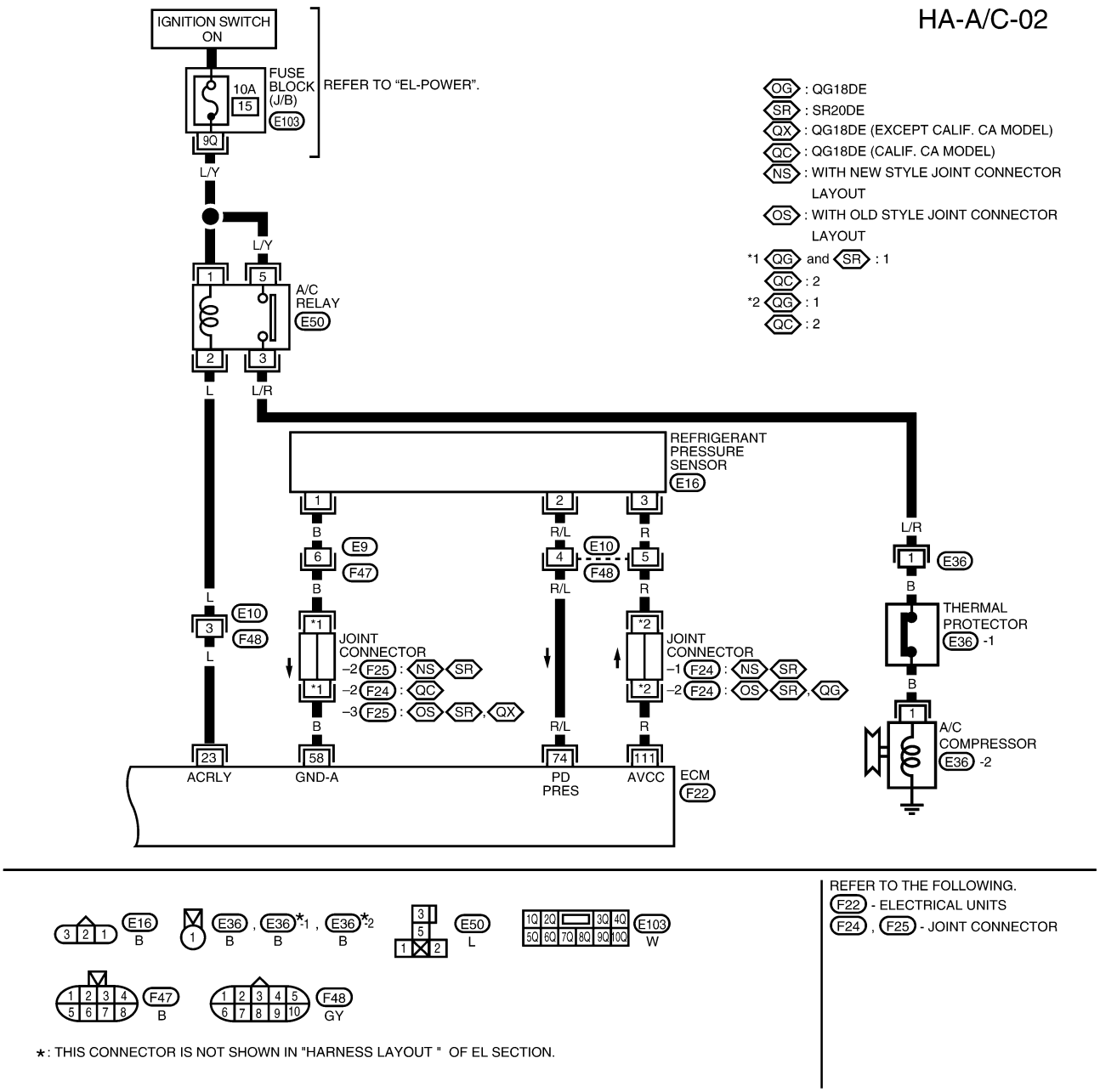

ECM/PCM TERMINALS AND REFERENCE VALUE MEASURED BETWEEN EACH TERMINAL AND GROUND

TERMINAL	WIRE COLOR	ITEM	CONDITION	DATA (DC)
23	L	AIR CONDITIONER RELAY	BOTH A/C SWITCH AND BLOWER SWITCH "ON" (COMPRESSOR IS OPERATING) (ENGINE RUNNING)	0 - 1.0V
			A/C SWITCH "OFF" (ENGINE RUNNING)	BATTERY VOLTAGE
58	B	ECM/PCM GROUND	IDLE SPEED (ENGINE RUNNING)	1V OR LESS
74	R/L	REFRIGERANT PRESSURE SENSOR	BOTH A/C SWITCH AND BLOWER SWITCH "ON" (ENGINE RUNNING, WARM-UP CONDITION, COMPRESSOR OPERATES)	0.36 - 3.88V
111	R	SENSOR POWER SUPPLY	(IGNITION SWITCH "ON")	APPROX 5.0V

LHA170

How to Perform Trouble Diagnoses for Quick and Accurate Repair

NIHA0018

WORK FLOW

NIHA0018S01

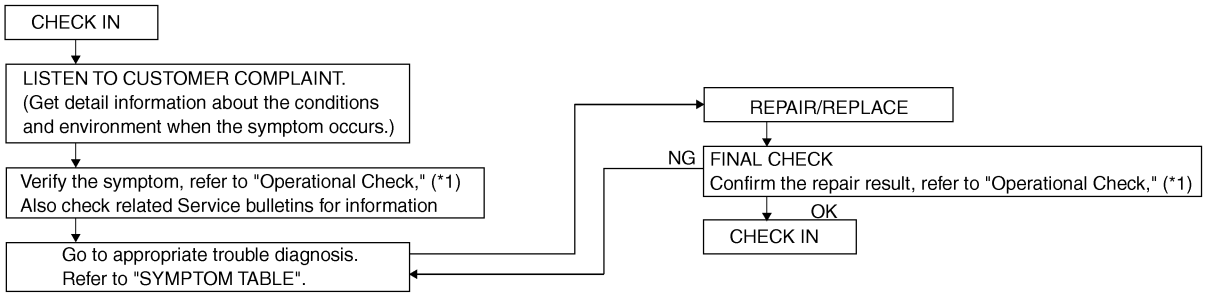

LHA198

*1: HA-26

SYMPTOM TABLE

NIHA0018S02

Symptom	Reference page	
● Intake door does not change in VENT, B/L or FOOT mode.	● Go to “TROUBLE DIAGNOSIS PROCEDURE FOR INTAKE DOOR”.	HA-29
● Air outlet does not change.	● Go to “TROUBLE DIAGNOSIS PROCEDURE FOR MODE DOOR”.	HA-33
● Air mix door does not change.	● Go to “TROUBLE DIAGNOSIS PROCEDURE FOR AIR MIX DOOR”.	HA-34
● Blower motor does not rotate at all.	● Go to “TROUBLE DIAGNOSIS PROCEDURE FOR BLOWER MOTOR”.	HA-36
● Magnet clutch does not engage when A/C switch and fan switch are ON.	● Go to “TROUBLE DIAGNOSIS PROCEDURE FOR MAGNET CLUTCH”.	HA-42
● Insufficient cooling.	● Go to “TROUBLE DIAGNOSIS PROCEDURE FOR INSUFFICIENT COOLING”.	HA-51
● Insufficient heating.	● Go to “TROUBLE DIAGNOSIS PROCEDURE FOR INSUFFICIENT HEATING”.	HA-59
● Noise	● Go to “TROUBLE DIAGNOSIS PROCEDURE FOR NOISE”.	HA-60

Operational Check

=NIHA0019

The purpose of the operational check is to confirm that the system operates properly.

CONDITIONS:

NIHA0019S01

- **Engine running and at normal operating temperature.**

PROCEDURE:

NIHA0019S02

1. Check Blower

NIHA0019S0201

1. Turn fan control switch to 1-speed.
   Blower should operate on 1-speed.
2. Then turn fan control switch to 2-speed, and continue checking blower speed until all speeds are checked.
3. Leave fan control switch on 4-speed.

If NG, go to “TROUBLE DIAGNOSIS PROCEDURE FOR BLOWER MOTOR”, HA-36.
If OK, continue with next check.

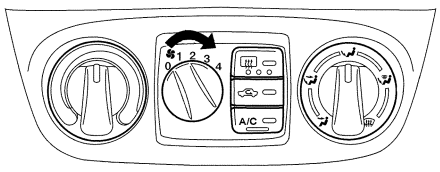

LHA110

2. Check Discharge Air

NIHA0019S0202

1. Turn knob to each mode.

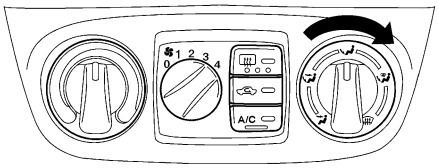

LHA111

2. Confirm that discharge air comes out according to the air distribution table at left.

Refer to “Discharge Air Flow”, HA-17.
If NG, go to “TROUBLE DIAGNOSIS PROCEDURE FOR MODE DOOR”, HA-33.
If OK, continue with next check.

Discharge air flow

Mode control knob	Air outlet/distribution		
	Face	Foot	Defroster
	100%	–	–
	60%	40%	–
	–	80%	20%
	–	60%	40%
	–	–	100%

RHA654F

NOTE:
Confirm that the compressor clutch is engaged (visual inspection) and intake door position is at FRESH when the DEF mode is selected.
Confirm that the intake door position is at FRESH when the F/D mode is selected.
Intake door position is checked in the next step.

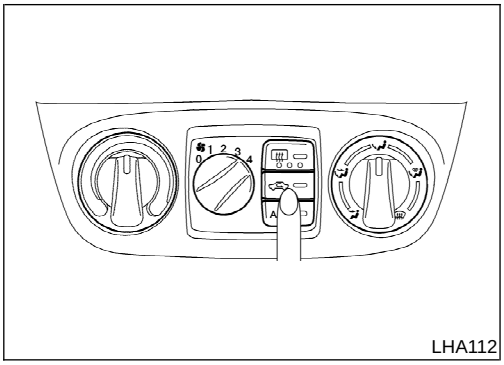

LHA112

3. Check Recirculation

NIHA0019S0203

1. Press REC switch.
   Recirculation indicator should illuminate.
2. Listen for intake door position change (you should hear blower sound change slightly).

If NG, go to "TROUBLE DIAGNOSIS PROCEDURE FOR INTAKE DOOR", HA-29.
If OK, continue with next check.

NOTE:

- **Recirculation does not operate in DEF and F/D modes.**

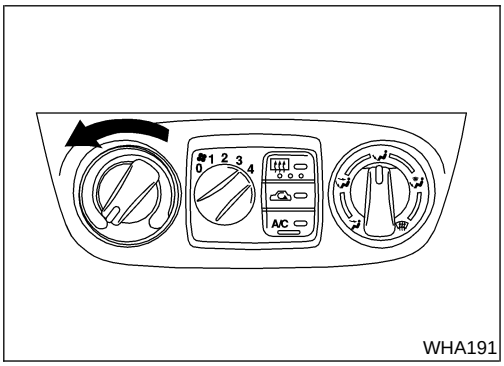

WHA191

4. Check Temperature Decrease

NIHA0019S0204

1. Turn temperature control knob to full cold.
2. Check for cold air at discharge air outlets.

If NG, go to "TROUBLE DIAGNOSIS PROCEDURE FOR INSUFFICIENT COOLING", HA-51.
If OK, continue with next check.

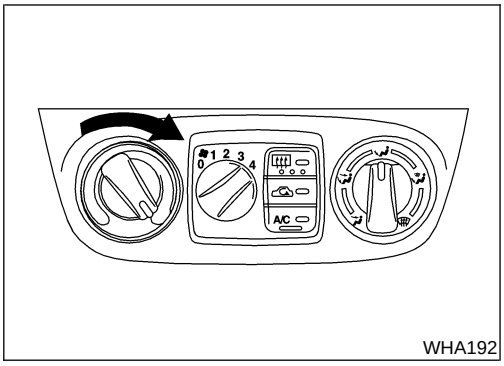

WHA192

5. Check Temperature Increase

NIHA0019S0205

1. Turn temperature control knob to full hot.
2. Check for hot air at discharge air outlets.

If NG, go to "TROUBLE DIAGNOSIS PROCEDURE FOR INSUFFICIENT HEATING", HA-59.

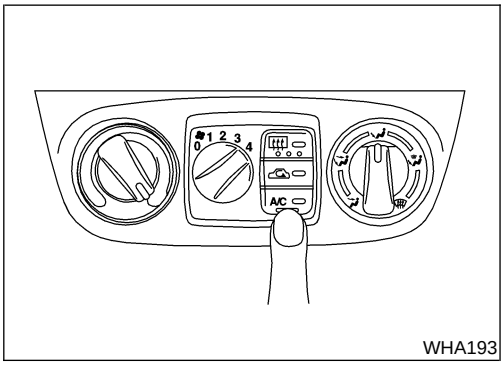

WHA193

6. Check Air Conditioner Switch

NIHA0019S0206

Turn the fan control switch to the desired (1- to 4-speed) position and push the A/C switch to turn ON the air conditioner.
The indicator lamp should come on when air conditioner is ON.
If NG, go to "TROUBLE DIAGNOSIS PROCEDURE FOR MAGNET CLUTCH", HA-42.

Main Power Supply and Ground Circuit Check

=NIHA0021

POWER SUPPLY CIRCUIT CHECK

NIHA0021S01

Check power supply circuit for air conditioner system.

Refer to *EL-11*, "Wiring Diagram — POWER —".

Intake Door

TROUBLE DIAGNOSIS PROCEDURE FOR INTAKE DOOR

=NIHA0023

SYMPTOM:

- **Intake door does not change.**

INSPECTION FLOW

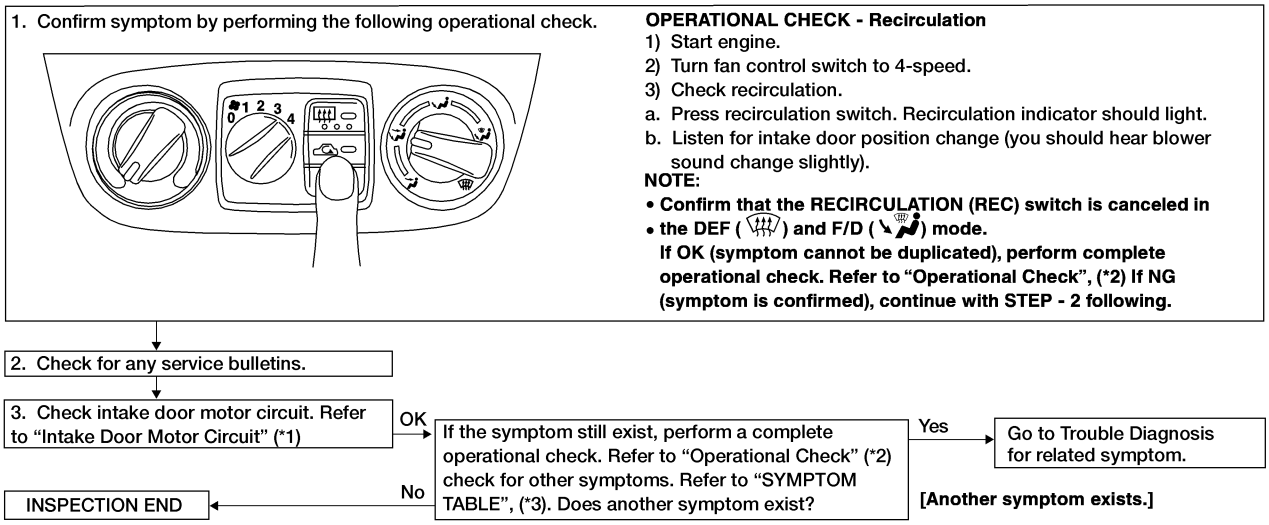

LHA142

*1: HA-30 *2: HA-26 *3: HA-25

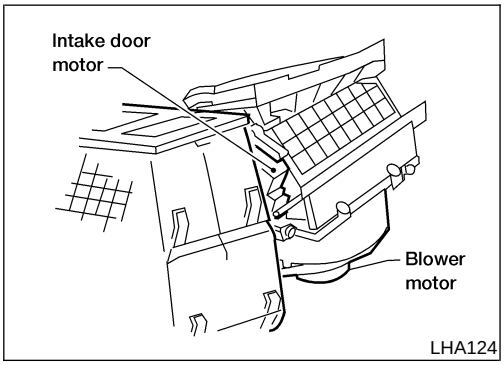

LHA124

COMPONENT DESCRIPTION

NIHA0024

Intake Door Motor

NIHA0024S01

The intake door motor is installed on the intake unit. Using a link, it opens and closes the intake door.

When REC switch is ON, the ground line of the motor is switched from terminal 2 to 1. This starts the motor because the position switch contacts built into it make current flow. When REC switch is OFF, the ground line is switched from terminal 1 to 2. The contacts turn along with the motor. When they reach the non-current flow position, the motor will stop.

INTAKE DOOR MOTOR CIRCUIT

=NIHA0025

SYMPTOM:

- **Intake door does not change.**

1	CHECK POWER SUPPLY FOR INTAKE DOOR MOTOR

Disconnect intake door motor harness connector.
Do approx. 12 volts exist between intake door motor harness terminal Nos. 1, 2 and body ground?

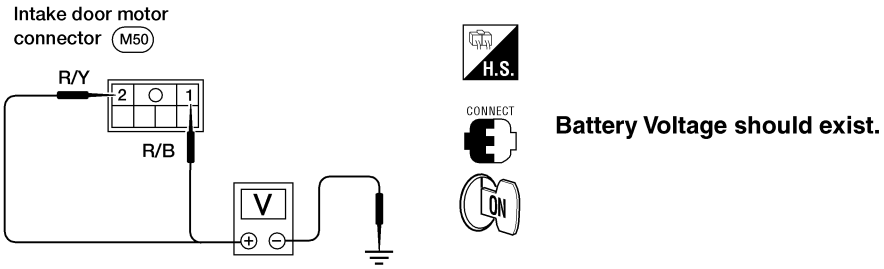

LHA168

Yes or No

Yes	▶	GO TO 3.
No	▶	GO TO 2.

2	CHECK CIRCUIT CONTINUITY BETWEEN INTAKE DOOR MOTOR AND AIR CONTROL UNIT

Check circuit continuity between air control harness terminal Nos. 10 (11) and intake door motor harness terminal Nos. 2 (1).

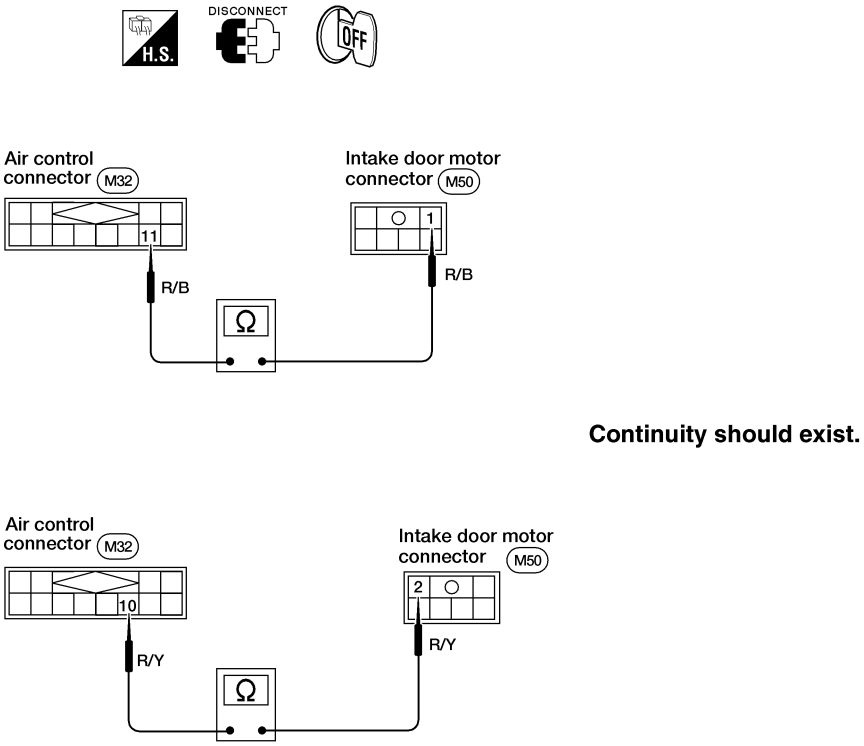

LHA140

If OK, check harness for short.

Yes or No

Yes	▶	Replace air control.
No	▶	Repair harness or connector.

3	CHECK CIRCUIT CONTINUITY OF INTAKE DOOR MOTOR

Check circuit continuity between intake door motor harness terminal No. 1 and No. 2.

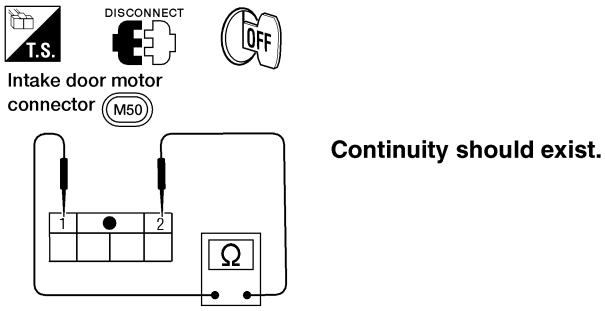

LHA139

OK or NG

OK	▶	GO TO 4.
NG	▶	Replace intake door motor.

4	CHECK INTAKE DOOR LINKAGE	
Refer to "CONTROL LINKAGE ADJUSTMENT", HA-32.		
OK or NG		
OK	▶	**INSPECTION END**
NG	▶	Repair or adjust.

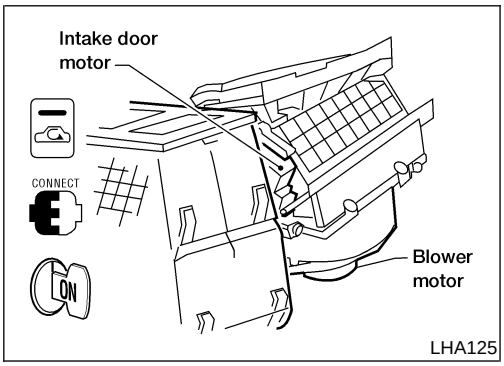

CONTROL LINKAGE ADJUSTMENT

NIHA0026

Intake Door Motor

NIHA0026S01

1. Install intake door motor on intake unit.
   Ensure that the intake door motor lever is fitted into the slit portion of intake door link.
2. Connect the intake door motor harness connector.
3. Turn ignition switch to "ON" position.
4. Check that intake door operates properly when REC switch is turned ON and OFF.

MODE DOOR

=NIHA0095

Trouble Diagnosis Procedure for Mode Door

NIHA0095S01

SYMPTOM:

- **Mode door does not change.**

INSPECTION FLOW

1. Confirm symptom by performing the following operational check.

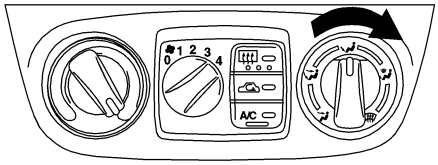

OPERATIONAL CHECK - Discharge air.

1) Turn mode control knob.

2) Confirm that discharge air comes out according to the air distribution table at left.
Refer to "Discharge Air Flow" in "DESCRIPTION" (*1).

Discharge air flow

Mode control knob	Air outlet/distribution		
	Face	Foot	Defroster
	100%	–	–
	60%	40%	–
	–	80%	20%
	–	60%	40%
	–	–	100%

NOTE:
Confirm that the compressor clutch is engaged (visual inspection) and intake door position is at FRESH when the DEF ( ) or D/F ( ) button is pressed.
If OK (symptom cannot be duplicated), perform complete operational check (*3).
If NG (symptom is confirmed), continue with STEP-2 following.

2. Check for any service bulletins.

3. Check mode door control linkage adjustment, refer to "CONTROL LINKAGE ADJUSTMENT" (*2)

OK

If the symptom still exists, perform a complete operational check, refer to "Operational Check", (*3) and check for other symptoms.
Refer to "SYMPTOM TABLE", (*4)
Does another symptom exist?

No → INSPECTION END

Yes → Go to Trouble Diagnosis for related symptom

[Another symptom exists.]

LHA146

*1: HA-17
*2: HA-34
*3: HA-26
*4: HA-25

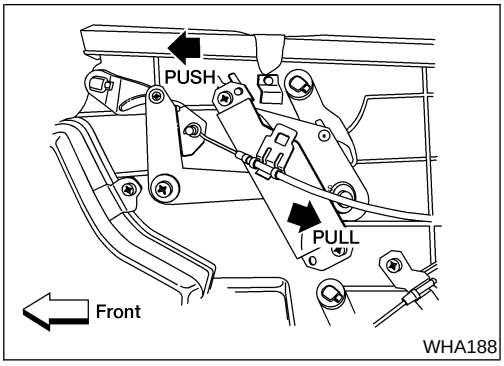

Control Linkage Adjustment

NIHA0095S02

Mode Door Control Linkage

NIHA0095S0201

- Turn mode door control knob to position.
- Set side link in DEF mode.
- Pull on outer cable in direction of arrow and then clamp it.
- **After positioning mode door control cable, check that it operates properly.**

AIR MIX DOOR

NIHA0096

Trouble Diagnosis Procedure for Air Mix Door

NIHA0096S01

SYMPTOM:

- **Air mix door does not change.**

INSPECTION FLOW

1. Confirm symptom by performing the following operational check.

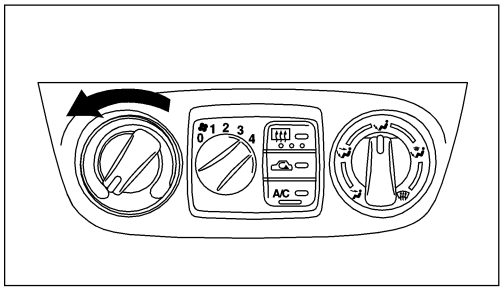

OPERATIONAL CHECK - Recirculation

1. Check Temperature Decrease
1) Turn temperature control knob to full cold.
2) Check for cold air at discharge air outlets.

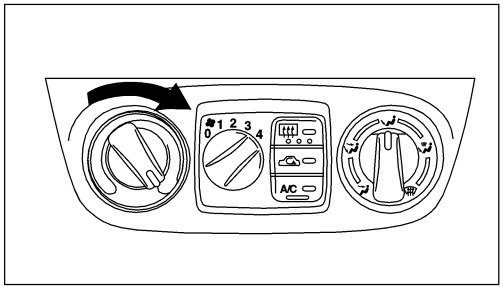

2. Check Temperature Increase
1) Turn temperature control knob to full hot.
2) Check for hot air at discharge air outlets.

If OK (symptom cannot be duplicated). Perform complete operational check. (*1)
If NG (symptom is confirmed), continue with STEP-2 following.

2. Check for any service bulletins.

3. Visually check air mix door linkage operation.

4. Visually check air mix door.

OK

If the symptom still exist, perform a complete operational check and check for other symptoms. Refer to "SYMPTOM TABLE", (*2). Does another symptom exist?

Yes → Go to Trouble Diagnosis for related symptom.

[Another symptom exists.]

No → INSPECTION END

WHA190

*1: HA-26 *2: HA-25

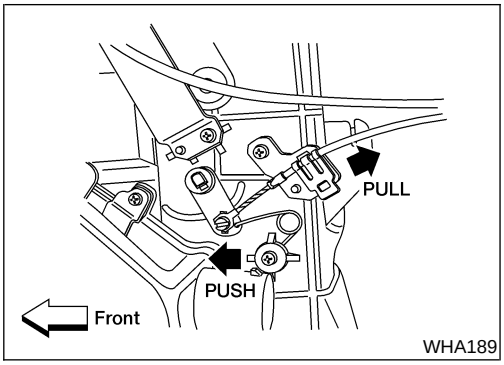

TEMPERATURE CONTROL LINKAGE ADJUSTMENT

NIHA0081

Temperature Control Cable

- Turn temperature control knob to the full cold position.
- Set the air mix door lever in the full cold position by hand.
- Pull on cable cover in the direction of the arrow and then clamp cable cover.

After positioning air mix door control cable, check for proper operation.

Blower Motor

TROUBLE DIAGNOSIS PROCEDURE FOR BLOWER MOTOR

=NIHA0036

SYMPTOM:

- **Blower motor does not rotate at all.**

INSPECTION FLOW

1. Confirm symptom by performing the following operational check.

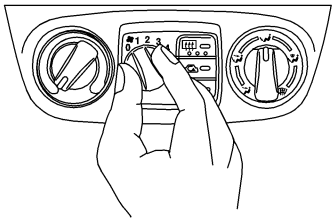

OPERATIONAL CHECK - Blower motor

1) Turn fan control switch to 1-speed.
   Blower should operate on 1-speed.
2) Then turn fan control switch to 2-speed.
3) Continue checking blower speed until all four speeds are checked.
4) Leave on 4-speed.

If OK (symptom cannot be duplicated), perform complete operational check, refer to "Operational Check", (*2).
If NG (symptom is confirmed), continue with STEP - 2 following.

2. Check for any service bulletins.

3. Check blower motor circuit, refer to "BLOWER MOTOR CIRCUIT", (*1)

OK

If the symptom still exist, perform a complete operational check, refer to "Operational Check", (*2) and check for other symptoms.
Refer to "SYMPTOM TABLE", (*3).
Does another symptom exist?

Yes → Go to Trouble Diagnosis for related symptom.
[Another symptom exists.]

NO → INSPECTION END

LHA138

*1: HA-37 *2: HA-26 *3: HA-25

BLOWER MOTOR CIRCUIT

=NIHA0037

SYMPTOM:

- **Blower motor does not rotate.**

Symptom table No.	INCIDENT
1	Fan fails to rotate.
2	Fan does not rotate at 1-speed.
3	Fan does not rotate at 2-speed.
4	Fan does not rotate at 3-speed.
5	Fan does not rotate at 4-speed.

1	**DIAGNOSTIC PROCEDURE**	
Check if blower motor rotates properly at each fan speed. Conduct checks as per symptom table above.		
1	▶	GO TO 2.
2, 3, 4	▶	GO TO 8.
5	▶	GO TO 10.

2	**CHECK POWER SUPPLY FOR BLOWER MOTOR**	
1. Disconnect blower motor harness connector. 2. Do approx. 12 volts exist between blower motor harness terminal + and body ground?		

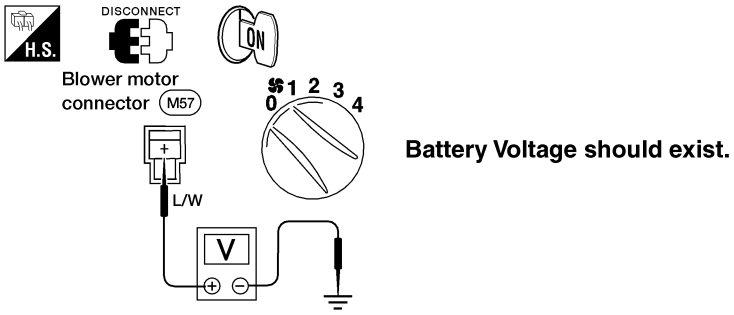

LHA137

Yes or No

Yes	▶	GO TO 3.
No	▶	Check 15A (Nos. 14 and 16) fuses at fuse block. Refer to ***EL-15***, "Ignition Power Supply — Ignition SW. in 'ON'".

3	CHECK CIRCUIT CONTINUITY FOR BLOWER MOTOR

1. Turn fan control switch to any position except OFF.
2. Check circuit continuity between blower motor harness terminal – and body ground.

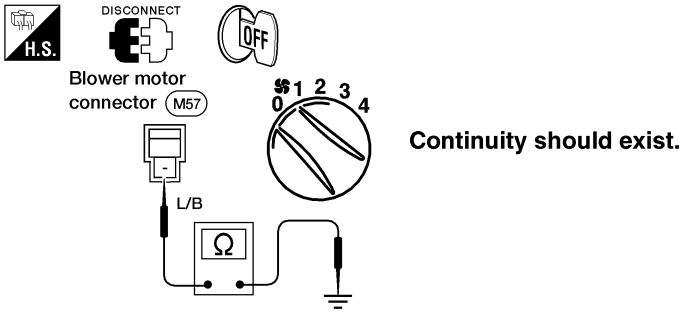

LHA136

OK or NG

OK	▶	GO TO 4.
NG	▶	Reconnect blower motor harness connector. GO TO 5.

4	CHECK BLOWER MOTOR

Refer to "ELECTRICAL COMPONENTS INSPECTION", HA-41.

OK or NG

OK	▶	INSPECTION END
NG	▶	Replace blower motor.

5	CHECK BLOWER MOTOR CIRCUIT BETWEEN BLOWER MOTOR AND FAN RESISTOR

Do approx. 12 volts exist between fan resistor harness terminal No. 1 and body ground?

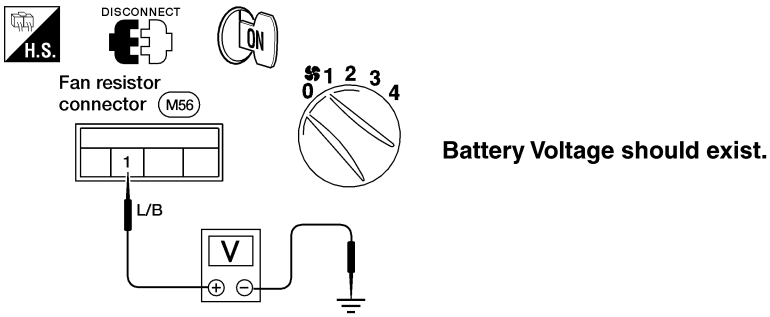

LHA135

Yes or No

Yes	▶	Disconnect fan control switch harness connector. GO TO 7.
No	▶	Disconnect blower motor and fan resistor harness connectors. GO TO 6.

6	CHECK CIRCUIT CONTINUITY BETWEEN BLOWER MOTOR AND FAN RESISTOR

Check circuit continuity between blower motor harness terminal – and fan resistor harness terminal No. 1.

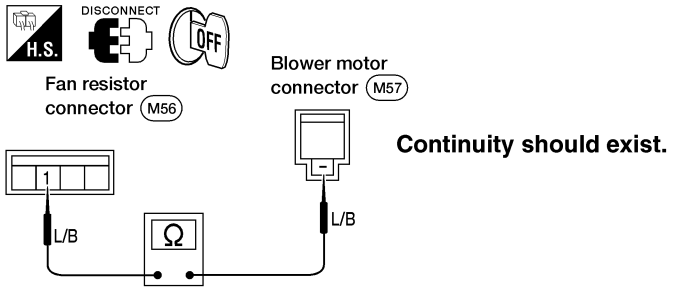

LHA134

OK or NG

OK	▶	Check harness for short.
NG	▶	Repair harness or connector.

7	CHECK GROUND CIRCUIT FOR FAN CONTROL SWITCH

Check circuit continuity between fan control switch harness terminal No. 5 and body ground.

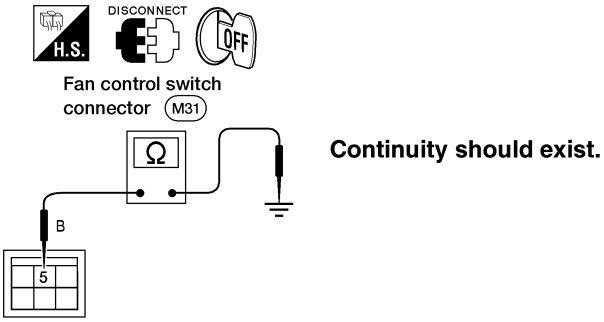

LHA133

OK or NG

OK	▶	GO TO 8.
NG	▶	Repair harness or connector.

8	CHECK RESISTOR AFTER DISCONNECTING IT

Refer to "ELECTRICAL COMPONENTS INSPECTION", HA-41.

OK or NG

OK	▶	GO TO 9.
NG	▶	Replace fan resistor.

9	CHECK FAN RESISTOR HARNESS CONNECTOR

Reconnect fan resistor harness connector.

1	▶	GO TO 12.
2, 3, 4	▶	GO TO 10.

10	CHECK FAN CONTROL SWITCH CIRCUIT

Do approx. 12 volts exist between each fan control switch harness terminal and body ground?

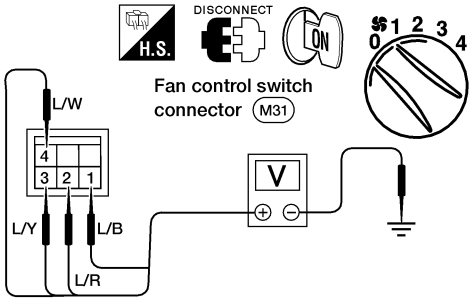

Symptom table No.	Terminal No. (+)	Terminal No. (−)	Voltage
2	4	Body ground	Approx. 12V
3	3		
4	2		
5	1		

LHA131

Yes or No

Yes	▶	GO TO 12.
No	▶	GO TO 11.

11	CHECK CIRCUIT CONTINUITY BETWEEN FAN CONTROL SWITCH AND FAN RESISTOR

Check circuit continuity between fan control switch harness terminal and fan resistor harness terminal.

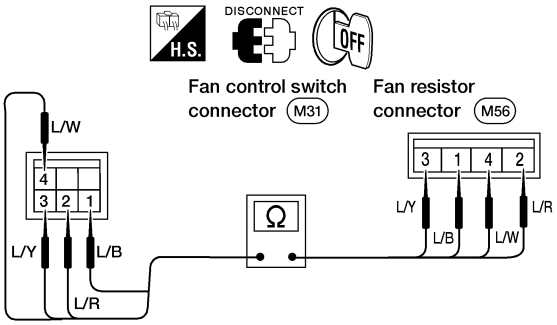

Terminal No. Fan control switch	Terminal No. Fan resistor	Continuity
1	1	Yes
2	2	
3	3	
4	4	

LHA132

OK or NG

OK	▶	Check harness for short.
NG	▶	Repair harness or connector.

12	CHECK FAN CONTROL SWITCH AFTER DISCONNECTING IT

Refer to "ELECTRICAL COMPONENTS INSPECTION", HA-41.

OK or NG

OK	▶	INSPECTION END
NG	▶	Replace fan control switch.

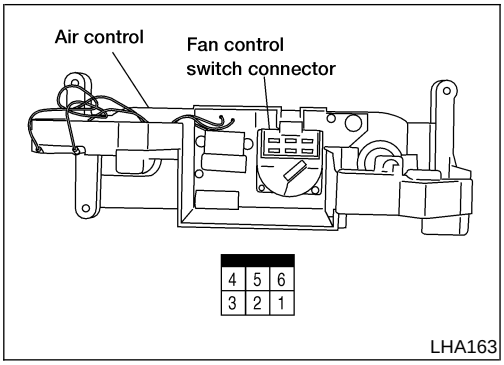

ELECTRICAL COMPONENTS INSPECTION

=NIHA0038

Fan Control Switch

NIHA0038S01

Check continuity between terminals at each switch position.

Fan control switch position	Continuity between terminals
OFF	
1	4 — 5 — 6
2	3 — 5 — 6
3	2 — 5 — 6
4	1 — 5 — 6

Blower Motor

NIHA0038S02

Confirm smooth rotation of the blower motor.

- Ensure that there are no foreign particles inside the intake unit.

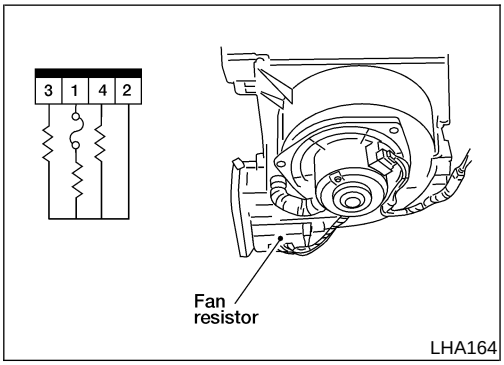

Fan Resistor

NIHA0038S03

Check resistance between terminals.

Terminal No.		Resistance (Approx.)
(+)	(−)	
3	1	1.305 - 1.595Ω
4		2.457 - 3.003Ω
2		0.225 - 0.275Ω

Magnet Clutch

TROUBLE DIAGNOSIS PROCEDURE FOR MAGNET CLUTCH

=NIHA0039

SYMPTOM:

- **Magnet clutch does not operate when A/C switch and fan control switch are ON.**

INSPECTION FLOW

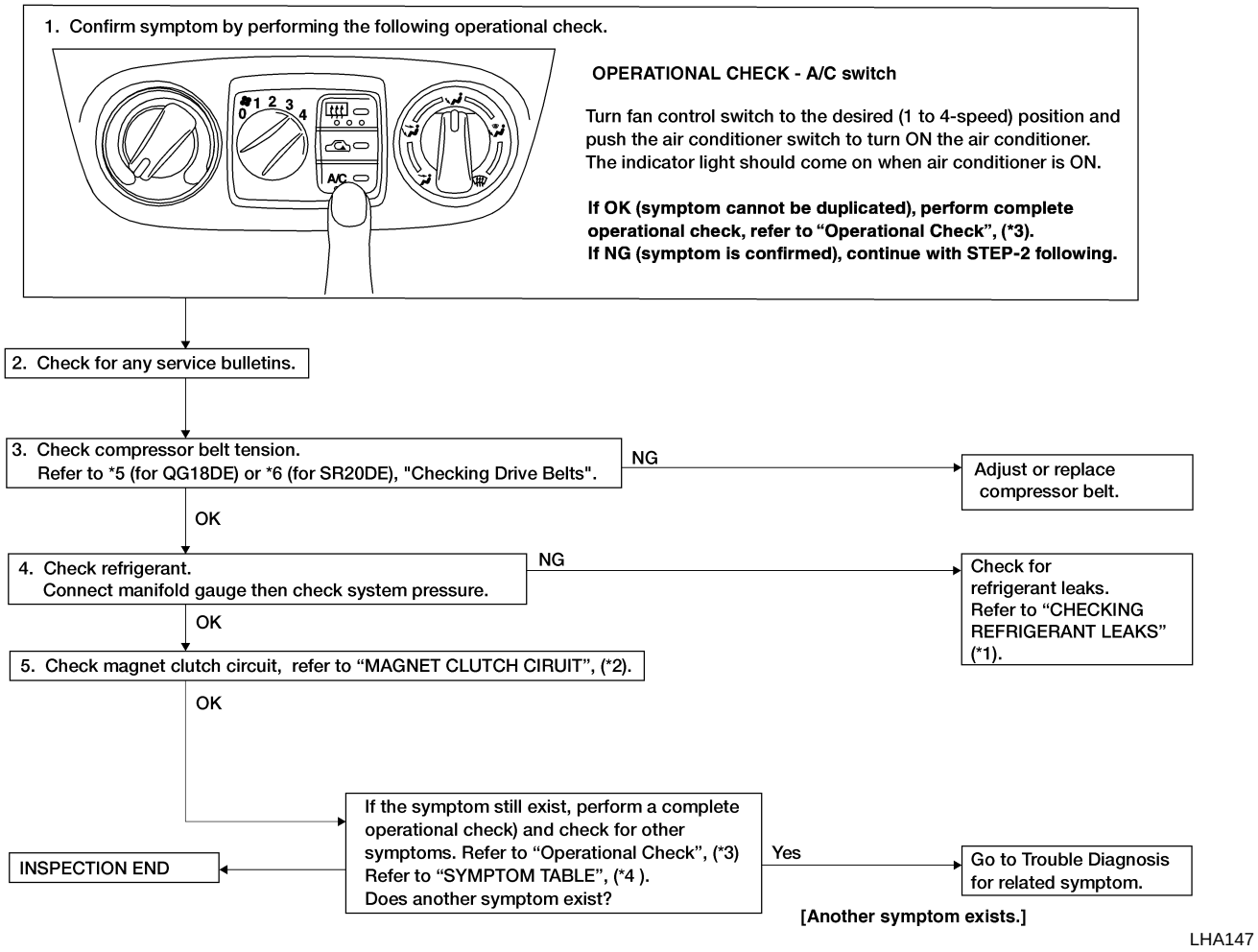

LHA147

*1: HA-76	*3: HA-26	*5: ***MA-16***
*2: HA-43	*4: HA-25	*6: ***MA-25***

MAGNET CLUTCH CIRCUIT

=NIHA0040

SYMPTOM:

- **Magnet clutch does not engage when A/C switch and fan control switch are ON.**

1	CHECK POWER SUPPLY FOR COMPRESSOR

Disconnect compressor harness connector.
Do approx. 12 volts exist between compressor harness connector E36–2 terminal No. 1, (B) and body ground?

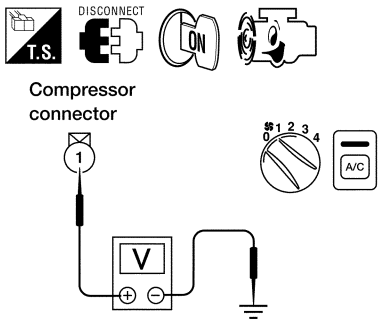

Battery voltage should exist

WHA256

Yes or No

Yes	▶	GO TO 2.
No	▶	GO TO 3.

2	CHECK MAGNET CLUTCH COIL

Disconnect magnet clutch connector.
Do approx. 3.2Ω exist between A/C compressor harness connector E36–2 terminal No. 1, (B) and body ground?

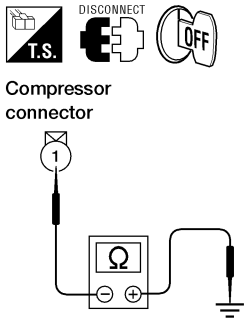

Resistance:
Approx. 3.2Ω

WHA257

Yes or No

Yes	▶	End inspection.
No	▶	Replace magnet clutch. Refer to "OVERHAUL", HA-67.

3	CHECK CIRCUIT CONTINUITY BETWEEN A/C RELAY AND COMPRESSOR HARNESS

Disconnect A/C relay.
Check circuit continuity between A/C relay harness terminal No. 3 and compressor harness terminal No. 1.

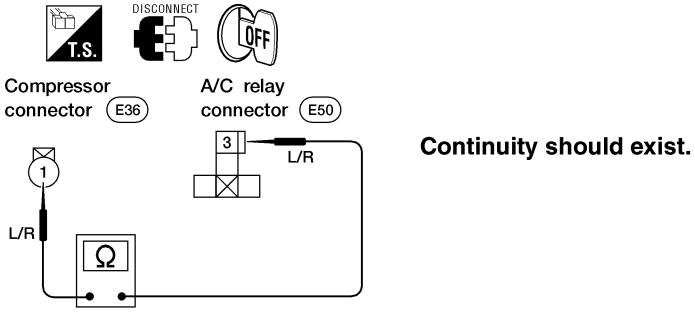

Continuity should exist.

LHA149

If OK, check harness for short.

OK or NG

OK	▶	GO TO 4.
NG	▶	Repair harness or connector.

4	CHECK POWER SUPPLY FOR A/C RELAY

Disconnect A/C relay.
Do approx. 12 volts exist between A/C relay harness terminal Nos. 1, 5 and body ground?

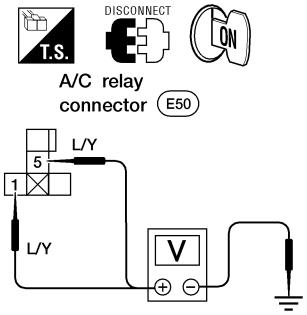

Battery voltage should exist

LHA150

Yes or No

Yes	▶	GO TO 5.
No	▶	Check power supply circuit and 10A (No. 15) fuse at fuse block. Refer to ***EL-15***, "Ignition Power Supply — Ignition SW. in 'ON'".

5	CHECK A/C RELAY AFTER DISCONNECTING IT

Refer to "A/C Relay", HA-49.

OK or NG

OK	▶	Reconnect A/C relay. GO TO 6.
NG	▶	Replace A/C relay.

6	CHECK COIL SIDE CIRCUIT OF A/C RELAY

Reconnect A/C relay.
Do approx. 12 volts exist between ECM harness connector F22 terminal No. 23, (L) and body ground?

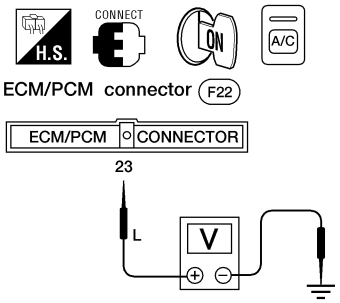

Battery Voltage should exist.

LHA151

Yes or No

Yes	▶	GO TO 8.
No	▶	Disconnect A/C relay. Disconnect ECM harness connector. GO TO 7.

7	CHECK CIRCUIT CONTINUITY BETWEEN A/C RELAY AND ECM HARNESS

Check circuit continuity between A/C relay harness connector E50 terminal No. 2 , (L) and ECM harness connector F22 terminal No. 23, (L).

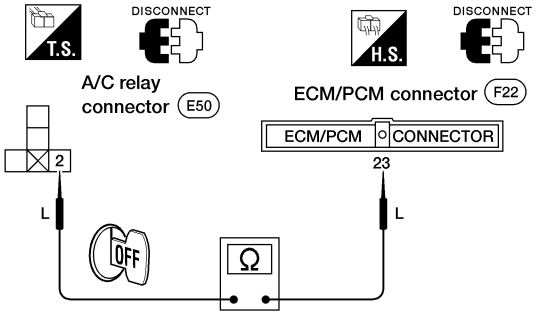

Continuity should exist.

LHA152

If OK, check harness for short.

OK or NG

OK	▶	Check ECM . Refer to "ECM Terminals and Reference Value", ***EC-1486*** (SR20DE), ***EC-824*** [QG18DE (Calif. CA Model)], ***EC-154*** [QG18DE (except Calif CA Model)].
NG	▶	Repair harness or connector.

8	CHECK VOLTAGE FOR ECM

Do approx. 12 volts exist between ECM harness connector F22 terminal No. 44, (L/R) and body ground?

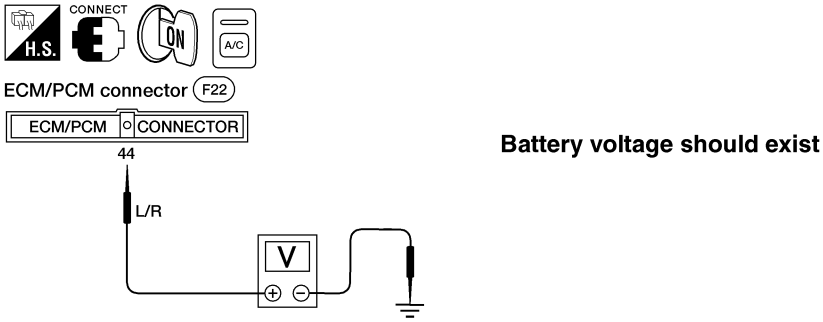

LHA153

Yes or No

Yes	▶	GO TO 9.
No	▶	Check harness and connector. If OK, check ECM . Refer to "ECM Terminals and Reference Value", ***EC-1486*** (SR20DE), ***EC-824*** [QG18DE (Calif. CA Model)], ***EC-154*** [QG18DE (except Calif. CA Model)].

9	CHECK REFRIGERANT PRESSURE SENSOR

Refer to "Refrigerant Pressure Sensor", HA-49.

OK or NG

OK	▶	GO TO 10.
NG	▶	Replace refrigerant pressure sensor.

10	CHECK POWER SUPPLY FOR THERMO CONTROL AMP.

Do approx. 12 volts exist between thermo control amp. harness terminal No. 1 and body ground?

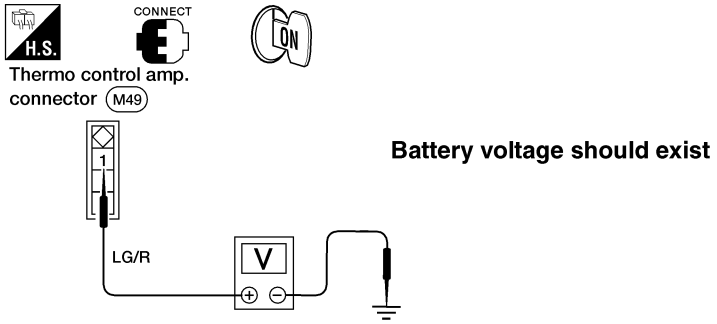

LHA155

Yes or No

Yes	▶	GO TO 11.
No	▶	Check power supply circuit and 10A (No. 15) fuse at fuse block. Refer to ***EL-15***, "Ignition Power Supply — Ignition SW. in 'ON'". ● If OK, check for open circuit in wiring harness. Repair or replace as necessary. ● If NG, replace fuse and check wiring harness for short circuit. Repair or replace as necessary.

11	CHECK POWER SUPPLY FOR THERMO CONTROL AMP.

Do approx. 12 volts exist between thermo control amp. harness terminal No. 2 and body ground?

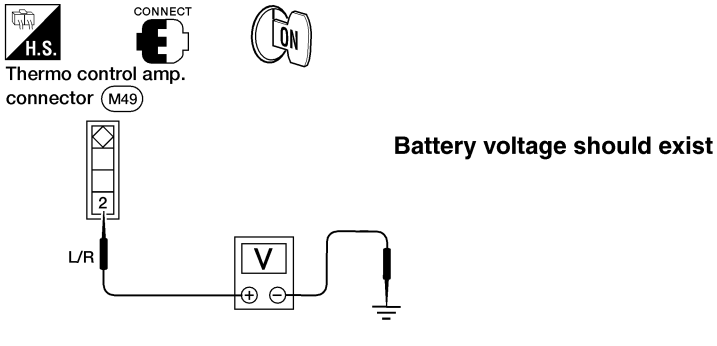

Yes or No

Yes	▶	GO TO 12.
No	▶	Repair or replace thermo control amp.

12	CHECK THERMO CONTROL AMP. OPERATION

Disconnect thermo control amp. harness connector.
Check circuit continuity between thermo control amp. harness terminal No. 3 and body ground.

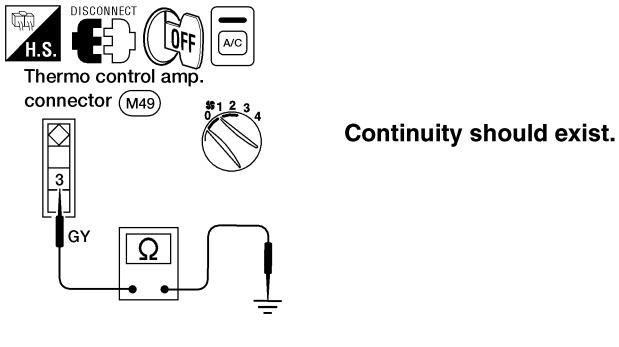

OK or NG

OK	▶	GO TO 13.
NG	▶	GO TO 14.

13	CHECK THERMO CONTROL AMP.

Refer to "Thermo Control Amp.", HA-50.

OK or NG

OK	▶	GO TO 14.
NG	▶	Replace thermo control amp.

14	CHECK CIRCUIT CONTINUITY BETWEEN THERMO CONTROL AMP. AND AIR CONTROL

Disconnect air control harness connector.
Check circuit continuity between thermo control amp. harness terminal No. 3 and air control harness terminal No. 7.

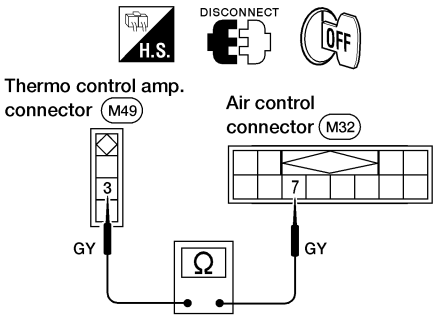

Continuity should exist.

LHA157

If OK, check harness for short.

OK or NG

OK	▶	GO TO 15.
NG	▶	Repair harness or connector.

15	CHECK CIRCUIT CONTINUITY BETWEEN FAN CONTROL SWITCH AND AIR CONTROL

Disconnect air control and fan control switch.
Check circuit continuity between fan control switch harness terminal No. 6 and air control harness terminal No. 8.

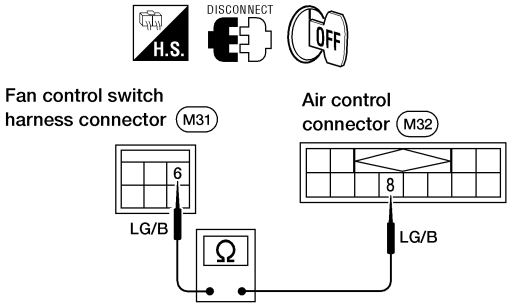

Continuity should exist.

LHA159

If OK, check harness for short.

OK or NG

OK	▶	GO TO 16.
NG	▶	Repair harness or connector.

16	CHECK FAN CONTROL SWITCH GROUND

Disconnect fan control switch harness connector.
Does continuity exist between fan control switch harness terminal No. 5 and body ground?

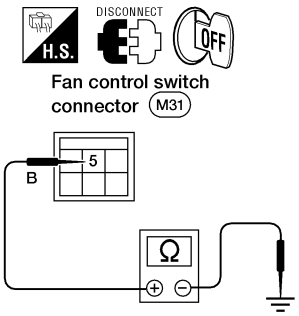

Continuity should exist.

LHA158

Yes or No

Yes	▶	Replace air control.
No	▶	Repair harness or connector.

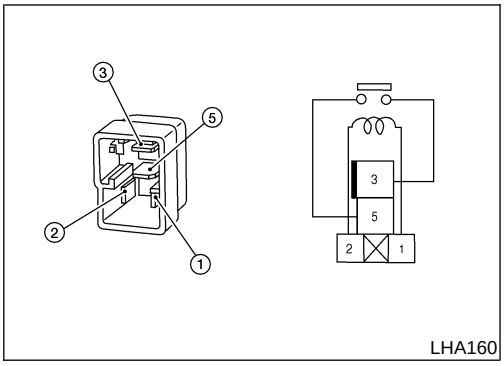

LHA160

ELECTRICAL COMPONENT INSPECTION

NIHA0041

A/C Relay

NIHA0041S01

Check continuity between terminal Nos. 3 and 5.

Conditions	Continuity
12V direct current supply between terminal Nos. 1 and 2	Yes
No current supply	No

If NG, replace relay.

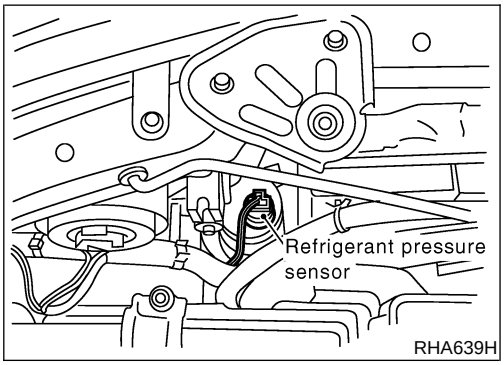

RHA639H

Refrigerant Pressure Sensor

NIHA0041S02

Make sure that higher A/C refrigerant pressure results in higher refrigerant-pressure sensor output voltage.

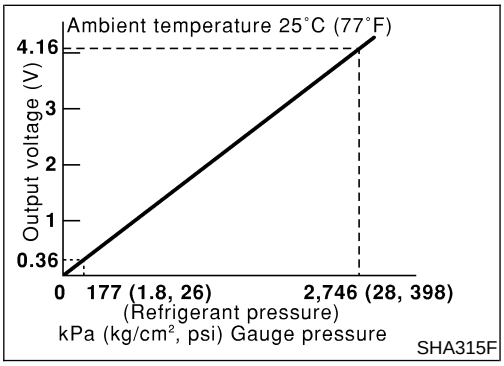

SHA315F

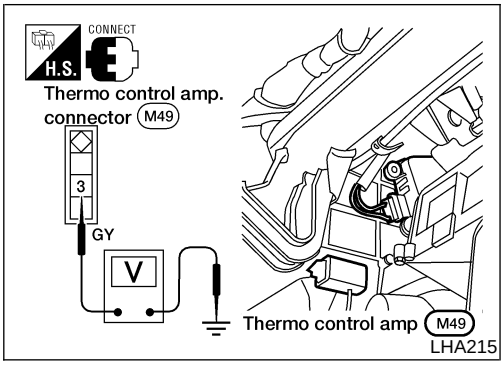

Thermal Control Amp.

NIHA0041S03

1. Run engine and operate A/C system.
2. Connect voltmeter from harness side.
3. Check thermo control amp. operation shown in the table.

Evaporator outlet air temperature °C (°F)	Thermo amp. operation	Tester (Approx.)
Decreasing to 2.5 - 3.5 (37 - 38)	Turn OFF	12V
Increasing to 4.0 - 5.0 (39 - 41)	Turn ON	0V

Insufficient Cooling

TROUBLE DIAGNOSIS PROCEDURE FOR INSUFFICIENT COOLING

=NIHA0082

SYMPTOM:

- **Insufficient cooling**

INSPECTION FLOW

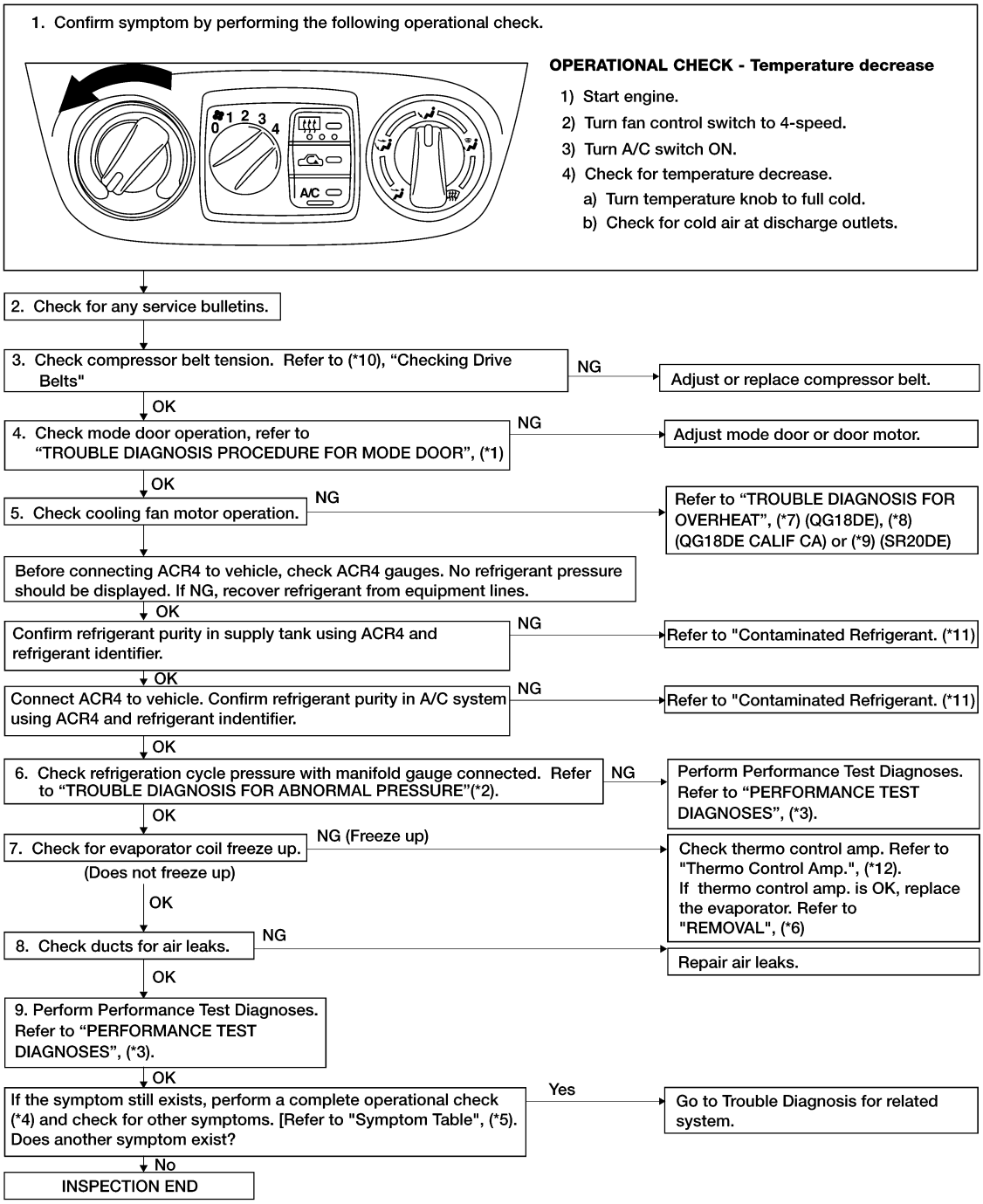

WHA298

*1: HA-33
*2: HA-55
*3: HA-52
*4: HA-26
*5: HA-25
*6: HA-73
*7: ***EC-530***
*8: ***EC-1173***
*9: ***EC-1790***
*10: ***MA-16*** (QG18DE) or ***MA-25*** (SR20DE)
*11: HA-3
*12: HA-46 (Perform steps 10 and 11.)

PERFORMANCE TEST DIAGNOSES

=NIHA0083

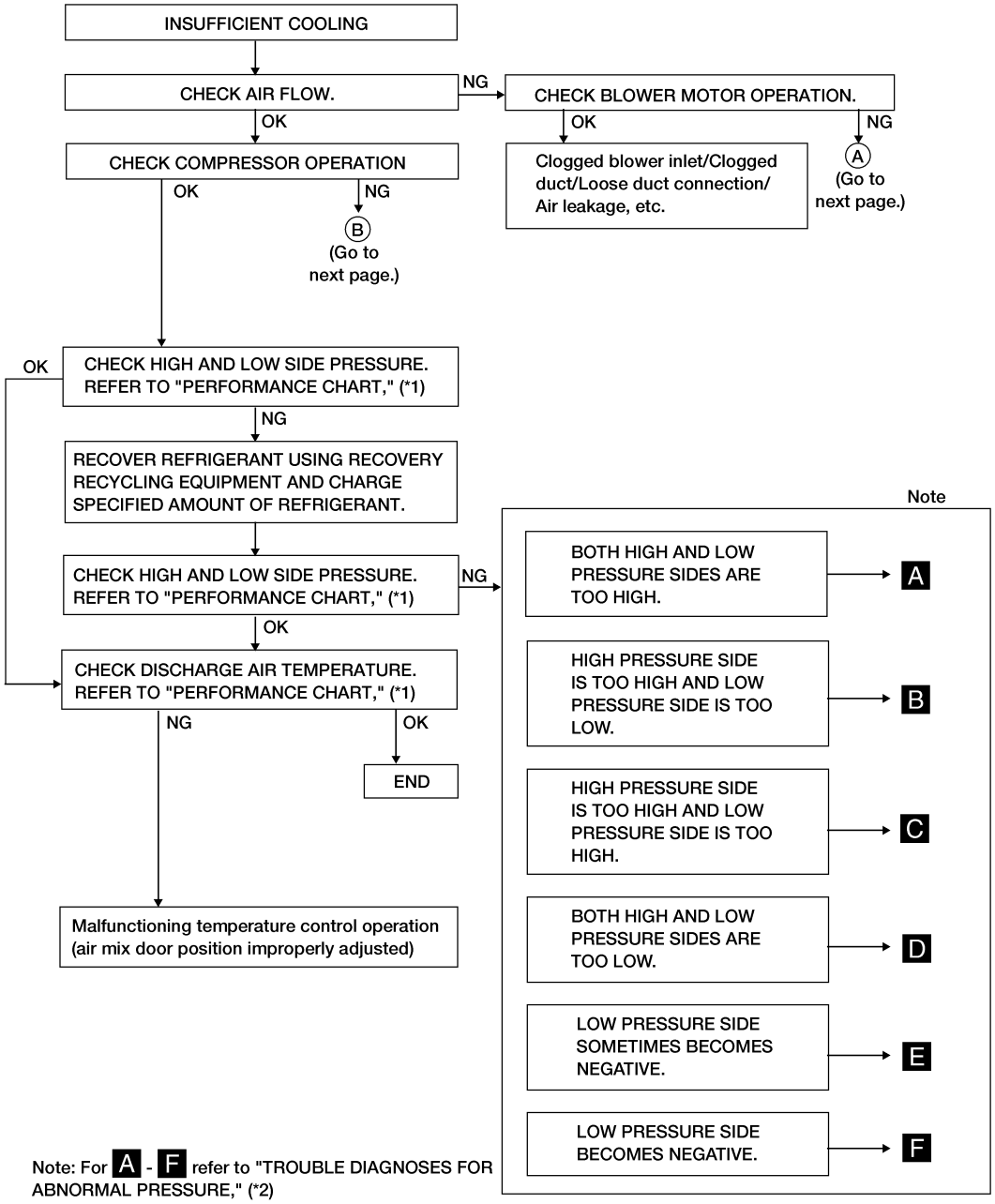

LHA196

*1: HA-54

*2: HA-55

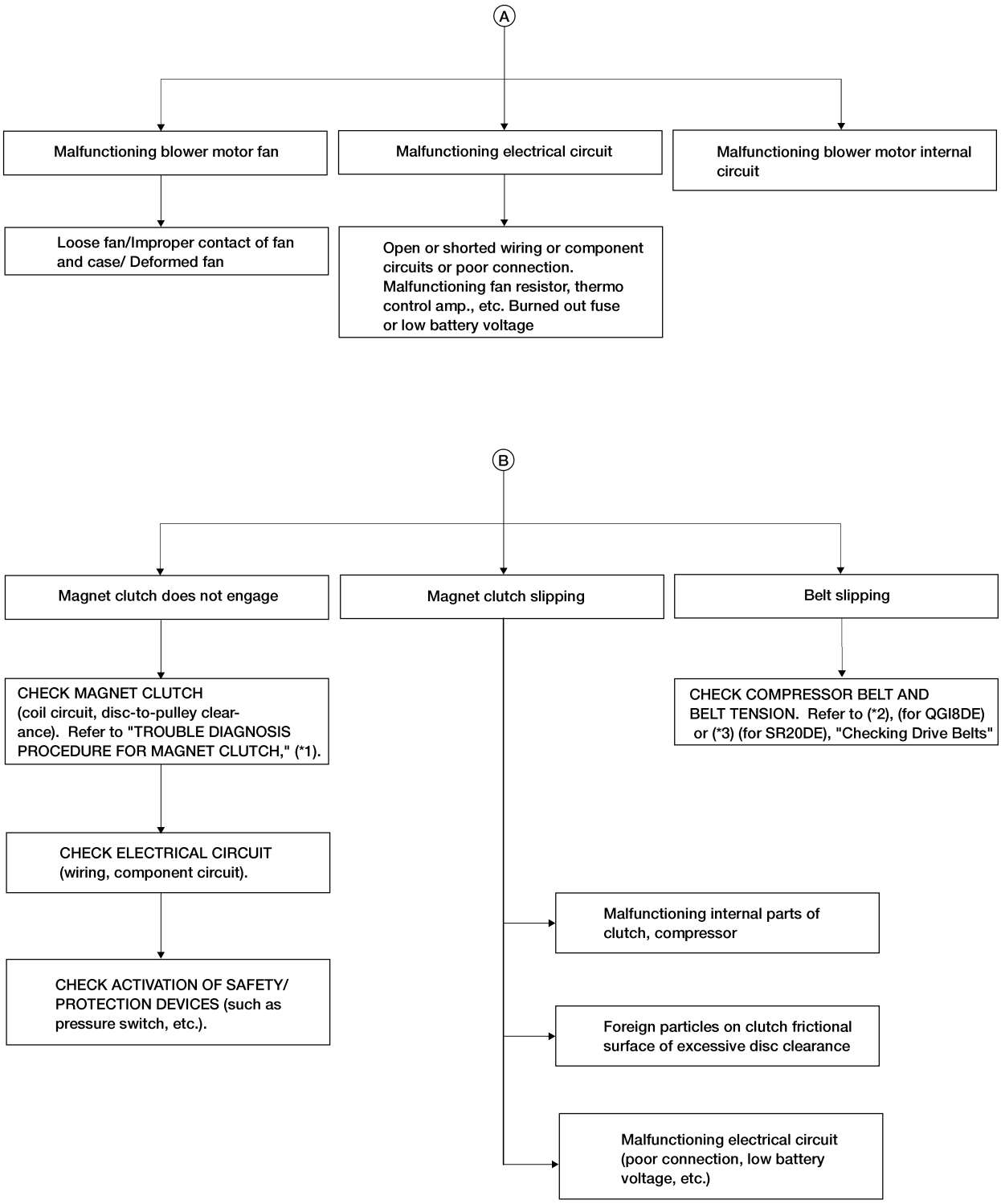

LHA202

*1: HA-42 *2: ***MA-16*** *3: ***MA-25***

PERFORMANCE CHART

=NIHA0090

The Nissan A/C system uses a thermal expansion valve to provide a restriction which causes a pressure change and also controls refrigerant flow through the evaporator.

The best way to diagnose a condition in the refrigerant system is to note the system pressures (shown by the manifold gauges) and the clutch cycle rate and times. Then, compare the findings to the charts.

- The system pressures are low (compressor suction) and high (compressor discharge).
- A clutch cycle is the time the clutch is engaged plus the time it is disengaged (time on plus time off).
- Clutch cycle times are the lengths of time (in seconds) that the clutch is ON and OFF.

Test Condition

NIHA0090S01

Testing must be performed as follows:

Vehicle location	Indoors or in the shade (in a well-ventilated place)
Doors	Closed
Door windows	Open
Hood	Open
TEMP. switch	Max. COLD
Mode switch	(Ventilation) set
REC switch	(Recirculation) set
(blower) speed	4-speed
Engine speed	1,500 rpm
Operate the air conditioning system for 10 minutes before taking measurements.	

Test Reading

NIHA0090S02

Recirculating-to-discharge Air Temperature Table

NIHA0090S0201

Inside air (Recirculating air) at blower assembly inlet		Discharge air temperature at center ventilator °C (°F)
Relative humidity %	Air temperature °C (°F)	
50 - 60	20 (68)	6.6 - 8.3 (44 - 47)
	25 (77)	10.4 - 12.4 (51 - 54)
	30 (86)	14.2 - 16.7 (58 - 62)
	35 (95)	18.2 - 21 (65 - 70)
	40 (104)	22.0 - 25.2 (72 - 77)
60 - 70	20 (68)	8.3 - 9.8 (47 - 50)
	25 (77)	12.4 - 14.4 (54 - 58)
	30 (86)	16.7 - 18.9 (62 - 66)
	35 (95)	21.0 - 23.6 (70 - 74)
	40 (104)	25.2 - 28.1 (77 - 83)

Ambient Air Temperature-to-operating Pressure Table NIHA0090S0202

Ambient air		High-pressure (Discharge side) kPa (kg/cm^2, psi)	Low-pressure (Suction side) kPa (kg/cm^2, psi)
Relative humidity %	Air temperature °C (°F)		
50 - 70	20 (68)	961 - 1,187 (9.8 - 12.1, 139 - 172)	108 - 157 (1.1 - 1.6, 16 - 23)
	25 (77)	1,295 - 1,599 (13.2 - 16.3, 186 - 228)	161.8 - 215.8 (1.65 - 2.2, 23.5 - 31.3)
	30 (86)	1,285 - 1,599 (13.1 - 16.0, 186 - 228)	167 - 216 (1.7 - 2.2, 24 - 31)
	35 (95)	1,520 - 1,863 (15.5 - 19.0, 220 - 279)	235 - 284 (2.4 - 2.9, 34 - 41)
	40 (104)	1,765 - 2,158 (18 - 22, 256 - 313)	289.3 - 353.1 (2.95 - 3.6, 41.9 - 51.2)

TROUBLE DIAGNOSES FOR ABNORMAL PRESSURE

NIHA0084

Whenever system's high and/or low side pressure is abnormal, diagnose using a manifold gauge. The marker above the gauge scale in the following tables indicates the standard (normal) pressure range. Since the standard (normal) pressure, however, differs from vehicle to vehicle, refer to "Ambient Air Temperature-to-operating Pressure Table", HA-55.

Both High and Low-pressure Sides are Too High.

NIHA0084S01

Gauge indication	Refrigerant cycle	Probable cause	Corrective action
Both high and low-pressure sides are too high. **A** 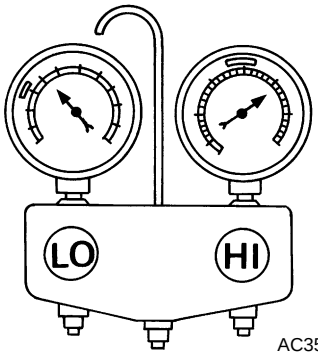 AC359A	● Pressure is reduced soon after water is splashed on condenser.	Excessive refrigerant charge in refrigeration cycle	Reduce refrigerant until specified pressure is obtained.
	Air suction by cooling fan is insufficient.	Insufficient condenser cooling performance ↓ 1. Condenser fins are clogged. 2. Improper fan rotation of cooling fan	● Clean condenser. ● Check and repair cooling fan as necessary.
	● Low-pressure pipe is not cold. ● When compressor is stopped high-pressure value quickly drops by approximately 196 kPa (2 kg/cm^2, 28 psi). It then decreases gradually thereafter.	Poor heat exchange in condenser (After compressor operation stops, high pressure decreases too slowly.) ↓ Air in refrigeration cycle	Evacuate repeatedly and recharge system.
	Engine tends to overheat.	Engine cooling systems malfunction.	Check and repair each engine cooling system.
	● An area of the low-pressure pipe is colder than areas near the evaporator outlet. ● Plates are sometimes covered with frost.	● Excessive liquid refrigerant on low-pressure side ● Excessive refrigerant discharge flow ● Expansion valve is open a little compared with the specification. ↓ 1. Improper thermal valve installation 2. Improper expansion valve adjustment	Replace expansion valve.

High-pressure Side is Too High and Low-pressure Side is Too Low.

NIHA0084S02

Gauge indication	Refrigerant cycle	Probable cause	Corrective action
High-pressure side is too high and low-pressure side is too low. **B** 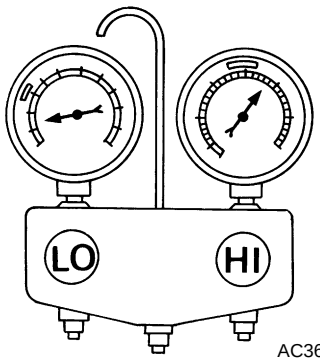 AC360A	Upper side of condenser and high-pressure side are hot, however, liquid tank is not so hot.	High-pressure tube or parts located between compressor and condenser are clogged or crushed.	● Check and repair or replace malfunctioning parts. ● Check lubricant for contamination.

High-pressure Side is Too Low and Low-pressure Side is Too High.

NIHA0084S03

Gauge indication	Refrigerant cycle	Probable cause	Corrective action
High-pressure side is too low and low-pressure side is too high. **C** 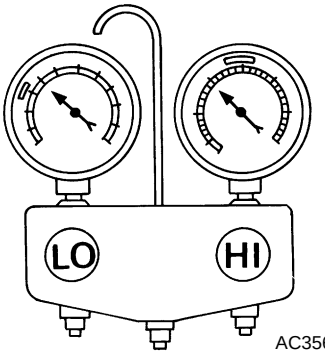 AC356A	High and low-pressure sides become equal soon after compressor operation stops.	Compressor pressure operation is improper. ↓ Damaged inside compressor packings	Replace compressor.
	No temperature difference between high and low-pressure sides	Compressor pressure operation is improper. ↓ Damaged inside compressor packings.	Replace compressor.

Both High- and Low-pressure Sides are Too Low.

NIHA0084S04

Gauge indication	Refrigerant cycle	Probable cause	Corrective action
Both high- and low-pressure sides are too low. **D** 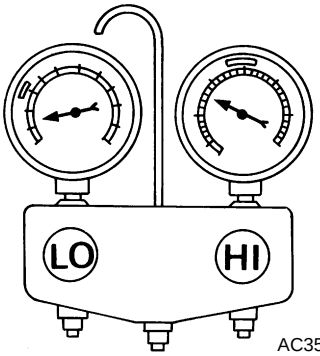 AC353A	• There is a big temperature difference between receiver drier outlet and inlet. Outlet temperature is extremely low. • Liquid tank inlet and expansion valve are frosted.	Compressor discharge capacity does not change. (Compressor stroke is set at maximum.)	• Replace liquid tank. • Check lubricant for contamination.
	• Temperature of expansion valve inlet is extremely low as compared with areas near liquid tank. • Expansion valve inlet may be frosted. • Temperature difference occurs somewhere in high-pressure side	High-pressure pipe located between receiver drier and expansion valve is clogged.	• Check and repair malfunctioning parts. • Check lubricant for contamination.
	• Expansion valve and liquid tank are warm or only cool when touched.	Low refrigerant charge ↓ Leaking fittings or components	Check refrigerant for leaks. Refer to "Checking Refrigerant Leaks", HA-76.
	There is a big temperature difference between expansion valve inlet and outlet while the valve itself is frosted.	Expansion valve closes a little compared with the specification. ↓ 1. Improper expansion valve adjustment 2. Malfunctioning thermal valve 3. Outlet and inlet may be clogged.	• Remove foreign particles by using compressed air. • Check lubricant for contamination.
	An area of the low-pressure pipe is colder than areas near the evaporator outlet.	Low-pressure pipe is clogged or crushed.	• Check and repair malfunctioning parts. • Check lubricant for contamination.
	Air flow volume is not enough or is too low.	Evaporator is frozen.	Replace expansion valve.

Low-pressure Side Sometimes Becomes Negative.

NIHA0084S05

Gauge indication	Refrigerant cycle	Probable cause	Corrective action
Low-pressure side sometimes becomes negative. E 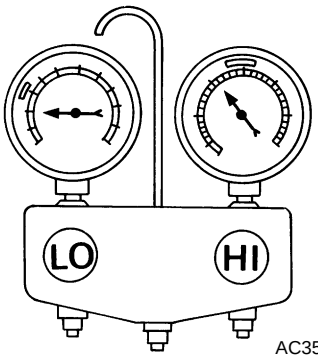 AC354A	• Air conditioning system does not function and does not cyclically cool the compartment air. • The system constantly functions for a certain period of time after compressor is stopped and restarted.	Refrigerant does not discharge cyclically. ↓ Moisture is frozen at expansion valve outlet and inlet. ↓ Water is mixed with refrigerant.	• Drain water from refrigerant or replace refrigerant. • Replace liquid tank.

Low-pressure Side Becomes Negative.

NIHA0084S06

Gauge indication	Refrigerant cycle	Probable cause	Corrective action
Low-pressure side becomes negative. F 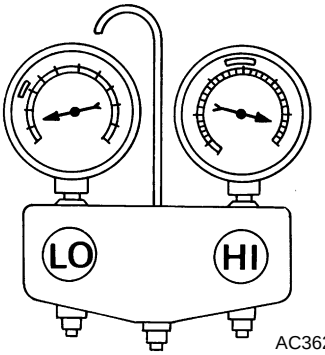 AC362A	Liquid tank or front/rear side of expansion valve's pipe is frosted or dewed.	High-pressure side is closed and refrigerant does not flow. ↓ Expansion valve or liquid tank is frosted.	Leave the system at rest until no frost is present. Start it again to check whether or not the problem is caused by water or foreign particles. • If water is the cause, initially cooling is okay. Then the water freezes causing a blockage. Drain water from refrigerant or replace refrigerant. • If due to foreign particles, remove expansion valve and remove particles with dry and compressed air (not shop air). • If either of the above methods cannot correct the problem, replace expansion valve. • Replace liquid tank. • Check lubricant for contamination.

Insufficient Heating

TROUBLE DIAGNOSIS PROCEDURE FOR INSUFFICIENT HEATING

=NIHA0080

Symptom:

- **Insufficient heating**

Inspection Flow

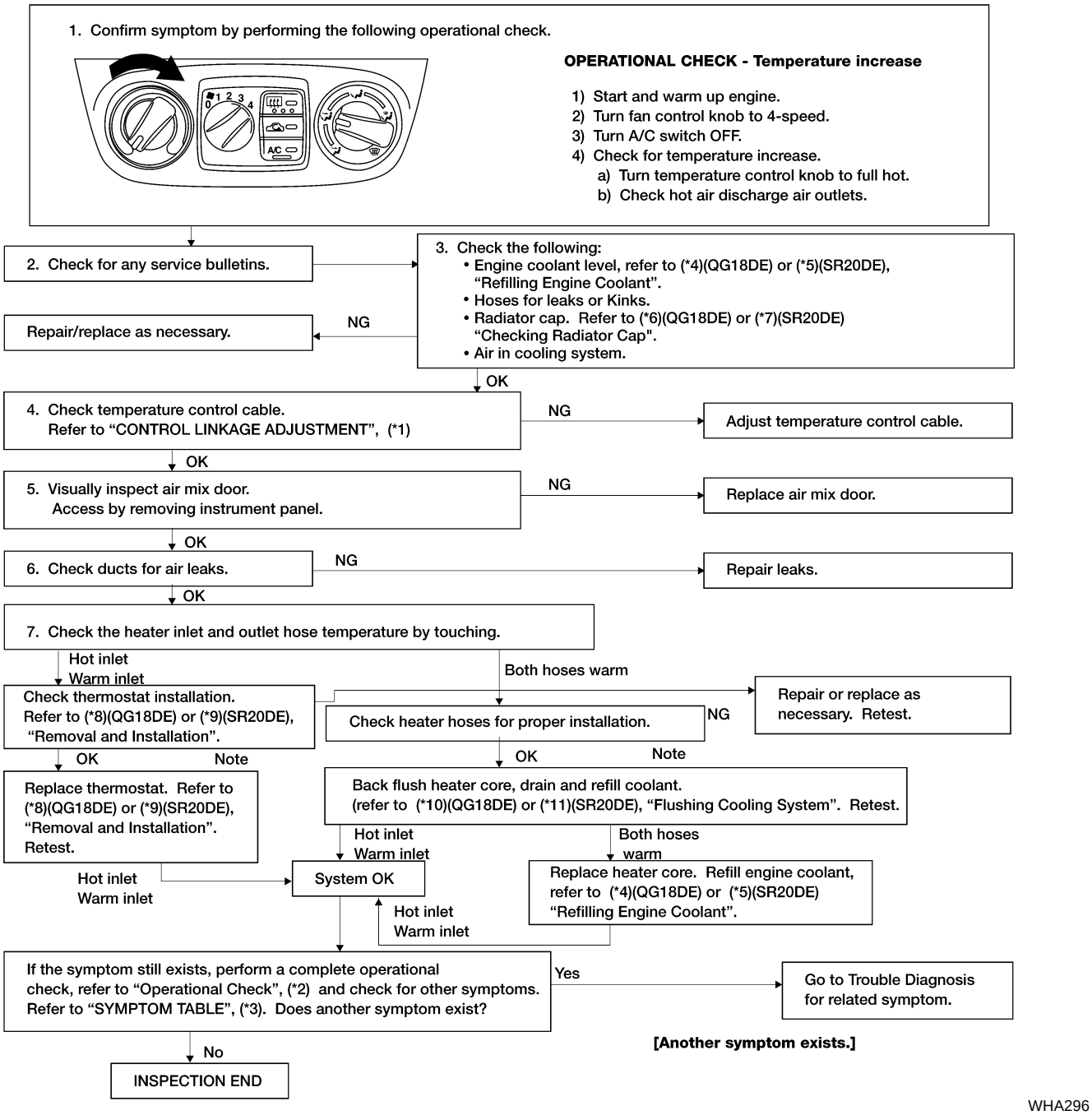

*1: HA-35
*2: HA-26
*3: HA-25
*4: ***MA-18***
*5: ***MA-27***
*6: ***LC-11***
*7: ***LC-29***
*8: ***LC-13***
*9: ***LC-31***
*10: ***MA-19***
*11: ***MA-28***

Noise

TROUBLE DIAGNOSIS PROCEDURE FOR NOISE

=NIHA0047

SYMPTOM:

- **Noise**

INSPECTION FLOW

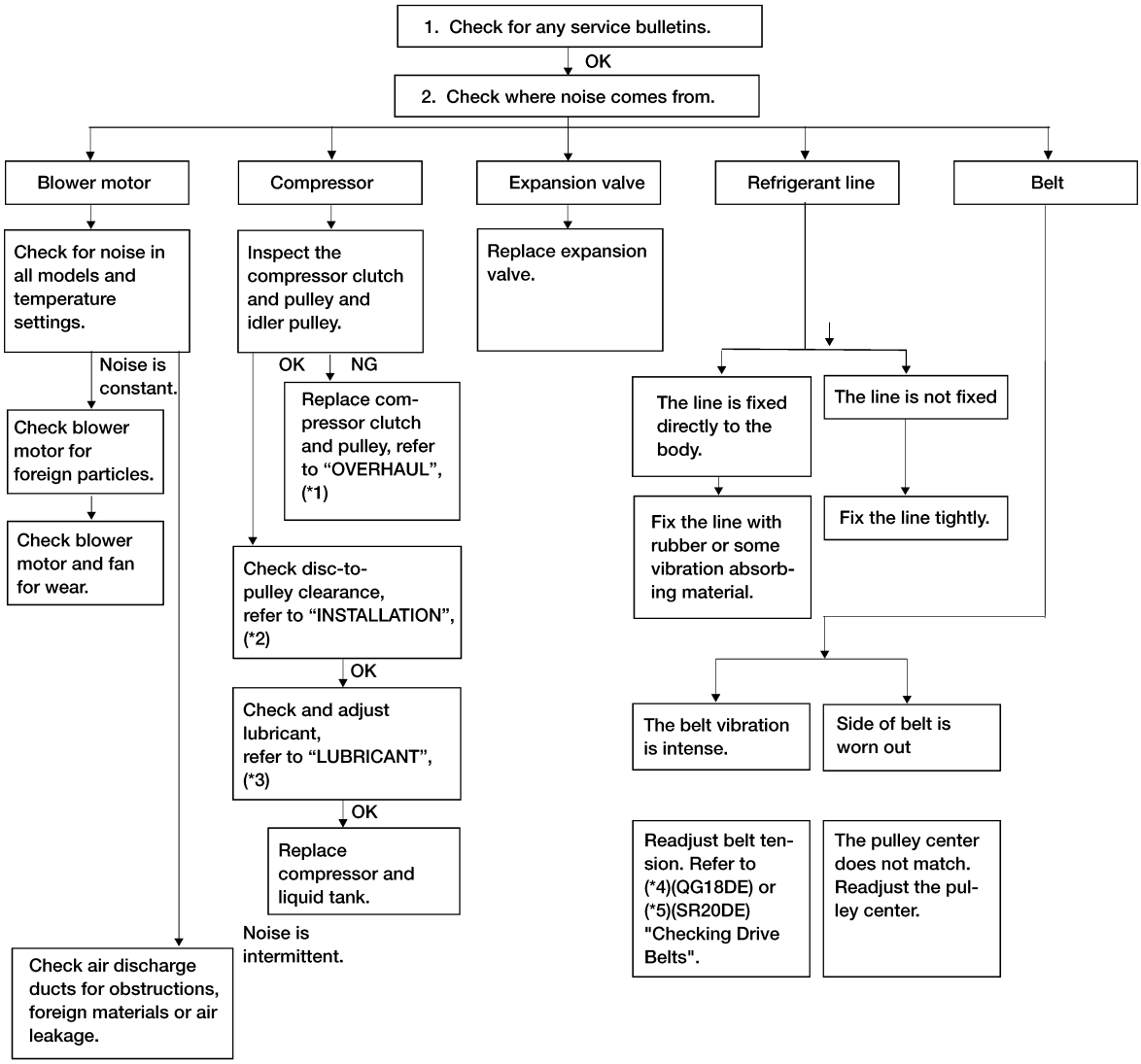

WHA297

*1: HA-67
*2: HA-69
*3: HA-63
*4: ***MA-16***
*5: ***MA-25***

HFC-134a (R-134a) Service Procedure

NIHA0048

SETTING OF SERVICE TOOLS AND EQUIPMENT

NIHA0048S01

Discharging Refrigerant

NIHA0048S0101

WARNING:

Avoid breathing A/C refrigerant and lubricant vapor or mist. Exposure may irritate eyes, nose and throat. Remove HFC-134a (R-134a) from A/C system using certified service equipment meeting requirements of SAE J2210 (R-134a recycling equipment) or J2209 (R-134a recovery equipment). If accidental system discharge occurs, ventilate work area before resuming service. Additional health and safety information may be obtained from refrigerant and lubricant manufacturers.

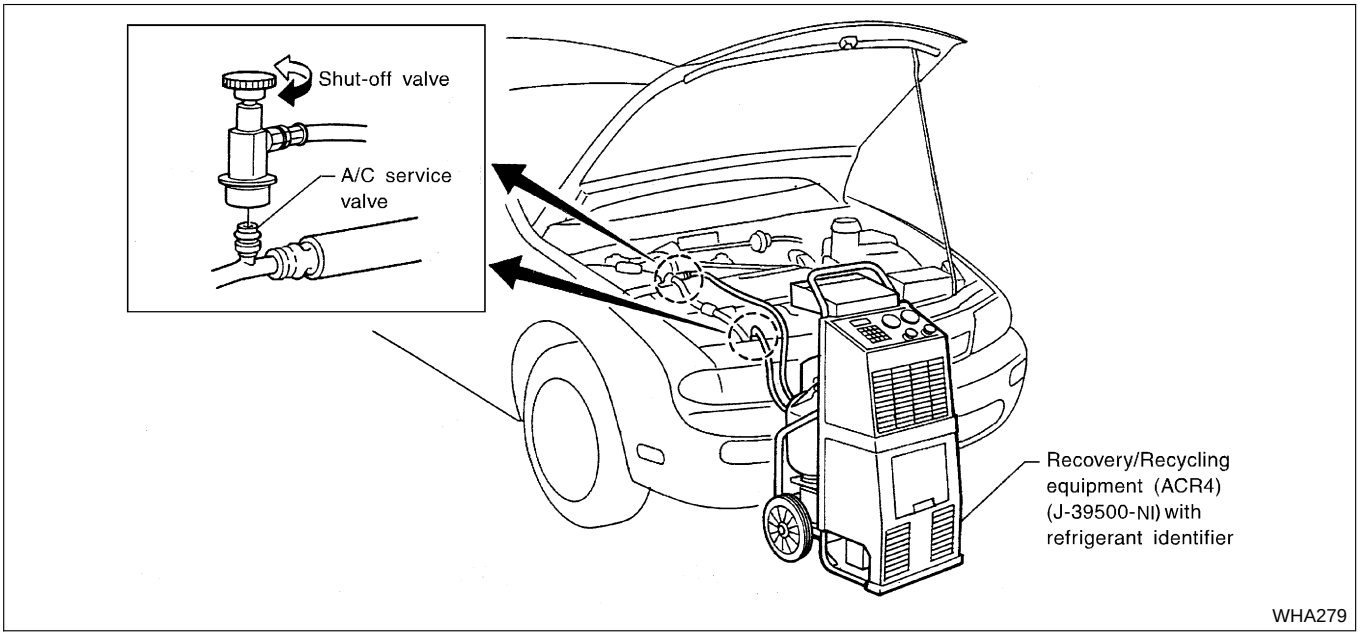

Evacuating System and Charging Refrigerant

NIHA0048S0102

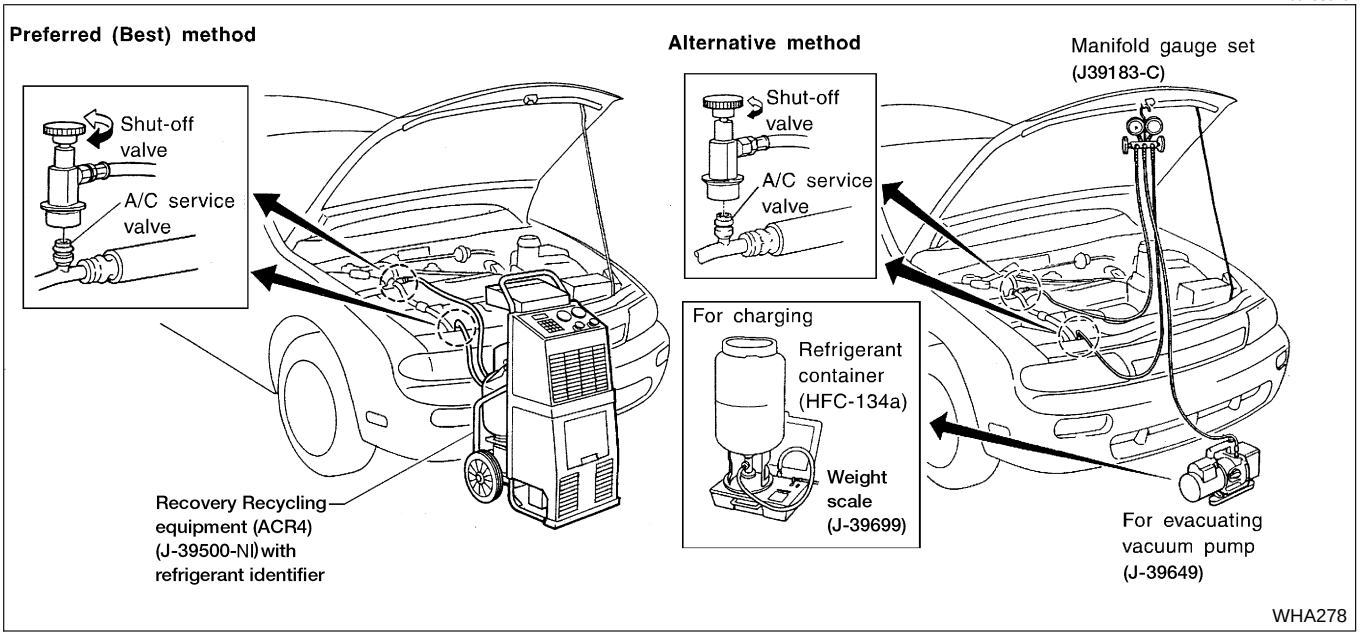

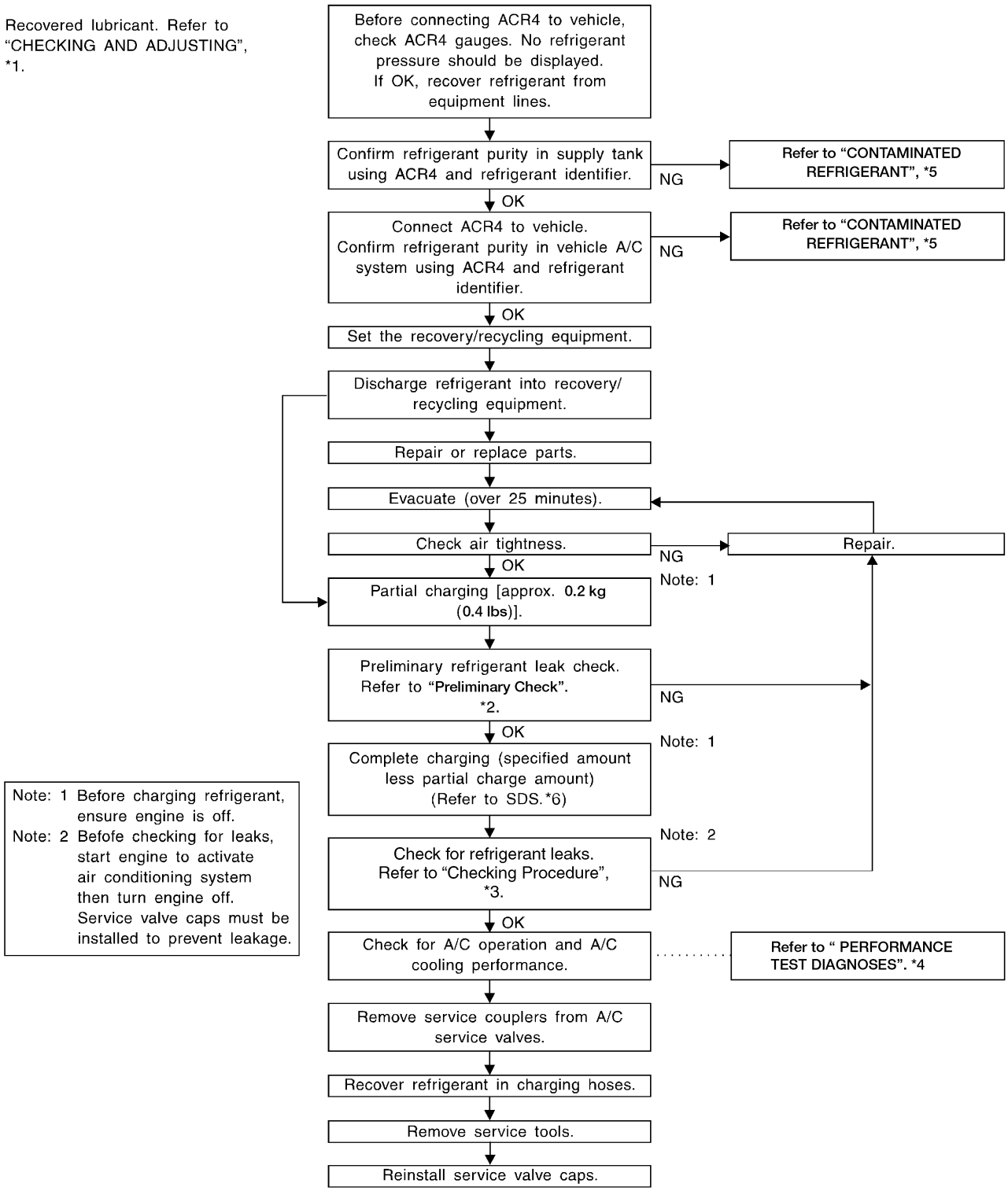

WHA168

*1: HA-63
*2: HA-76
*3: HA-77
*4: HA-52
*5: HA-3
*6: HA-81

Maintenance of Lubricant Quantity in Compressor

NIHA0049

The lubricant in the compressor circulates through the system with the refrigerant. Add lubricant to compressor when replacing any component or after a large gas leakage occurred. It is important to maintain the specified amount.
If lubricant quantity is not maintained properly, the following malfunctions may result:

- Lack of lubricant: May lead to a seized compressor
- Excessive lubricant: Inadequate cooling (thermal exchange interference)

LUBRICANT

NIHA0049S01

Name: Nissan A/C System Oil Type R
Part number: KLH00-PAGR0

CHECKING AND ADJUSTING

NIHA0049S02

Adjust the lubricant quantity according to the test group shown below.

1	LUBRICANT RETURN OPERATION	
Can lubricant return operation be performed? ● A/C system works properly. ● There is no evidence of a large amount of lubricant leakage.		
Yes or No		
Yes	▶	GO TO 2.
No	▶	GO TO 3.

2	PERFORM LUBRICANT RETURN OPERATION, PROCEEDING AS FOLLOWS	
1. Start engine, and set the following conditions: ● **Test condition** **Engine speed: Idling to 1,200 rpm** **A/C or AUTO switch: ON** **Blower speed: Max. position** **Temp. control: Optional [Set so that intake air temperature is 25 to 30°C (77 to 86°F).]** 2. Perform lubricant return operation for about 10 minutes. 3. Stop engine. **CAUTION:** **If excessive lubricant leakage is noted, do not perform the lubricant return operation.**		
	▶	GO TO 3.

3	CHECK COMPRESSOR	
Should the compressor be replaced?		
Yes or No		
Yes	▶	GO TO “REMOVAL AND INSTALLATION”, HA-66.
No	▶	GO TO 4.

4	CHECK ANY PART	
Is there any part to be replaced? (Evaporator, condenser, liquid tank or in case there is evidence of a large amount of lubricant leakage.)		
Yes or No		
Yes	▶	GO TO "Lubricant Adjusting Procedure for Components Replacement Except Compressor", HA-65.
No	▶	Carry out the A/C performance test.

Lubricant Adjusting Procedure for Components Replacement Except Compressor

=NIHA0049S0201

After replacing any of the following major components, add the correct amount of lubricant to the system.

Amount of lubricant to be added

Part replaced	Lubricant to be added to system	Remarks
	Amount of lubricant mℓ (US fl oz, Imp fl oz)	
Evaporator	75 (2.5, 2.6)	—
Condenser	75 (2.5, 2.6)	—
Liquid tank	5 (0.2, 0.2)	Add if compressor is not replaced. *1
In case of refrigerant leak	30 (1.0, 1.1)	Large leak
	—	Small leak *2

*1: If compressor is replaced, addition of lubricant is included in the table.
*2: If refrigerant leak is small, no addition of lubricant is needed.

Lubricant Adjustment Procedure for Compressor Replacement

NIHA0049S0202

1. Before connecting ACR4 to vehicle, check ACR4 gauges. No refrigerant pressure should be displayed. If OK, recover refrigerant from equipment lines.
2. Confirm refrigerant purity in supply tank using ACR4 and refrigerant identifier. If NG, refer to "CONTAMINATED REFRIGERANT", HA-3.
3. Connect ACR4 to vehicle. Confirm refrigerant purity in vehicle A/C system using ACR4 and refrigerant identifier. If NG, refer to "CONTAMINATED REFRIGERANT", HA-3.
4. Discharge refrigerant into the refrigerant recovery/recycling equipment. Measure lubricant discharged into the recovery/recycling equipment.
5. Drain the lubricant from the "old" (removed) compressor into a graduated container and recover the amount of lubricant drained.
6. Drain the lubricant from the "new" compressor into a separate, clean container.
7. Measure an amount of new lubricant installed equal to amount drained from "old" compressor. Add this lubricant to "new" compressor through the suction port opening.
8. Measure an amount of new lubricant equal to the amount recovered during discharging. Add this lubricant to "new" compressor through the suction port opening.
9. If the liquid tank also needs to be replaced, add an additional 5 mℓ (0.2 US fl oz, 0.2 Imp fl oz) of lubricant at this time.
   Do not add this 5 mℓ (0.2 US fl oz, 0.2 Imp fl oz) of lubricant if only replacing the compressor.

Lubricant adjusting procedure for compressor replacement

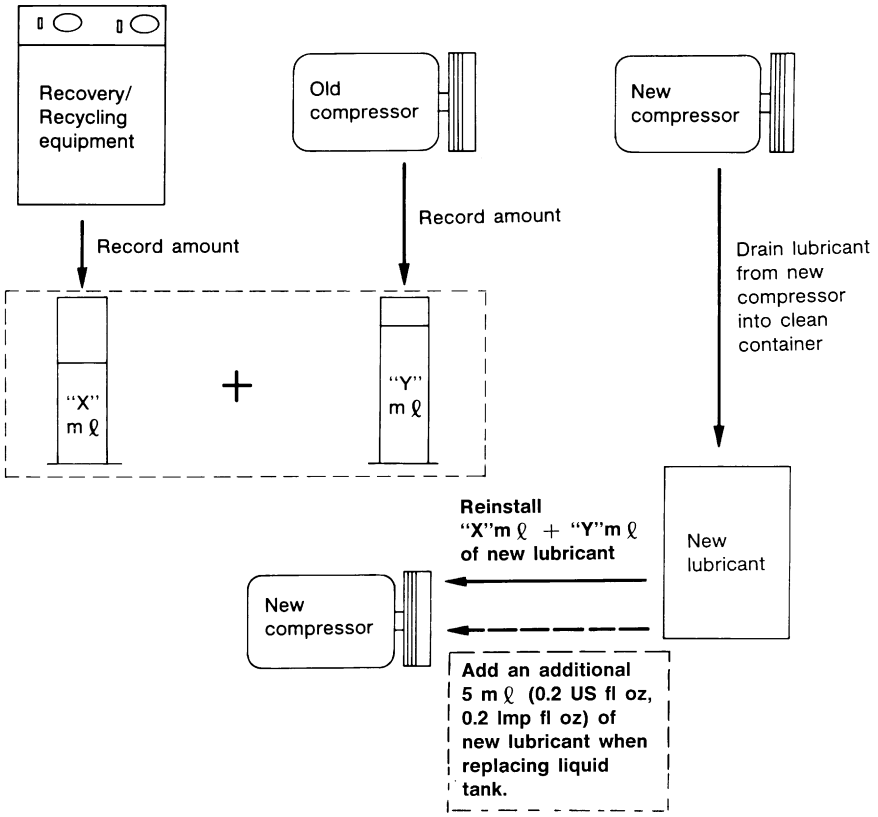

RHA065DD

Compressor

REMOVAL AND INSTALLATION

NIHA0050

SEC. 274 • 275
QG18DE

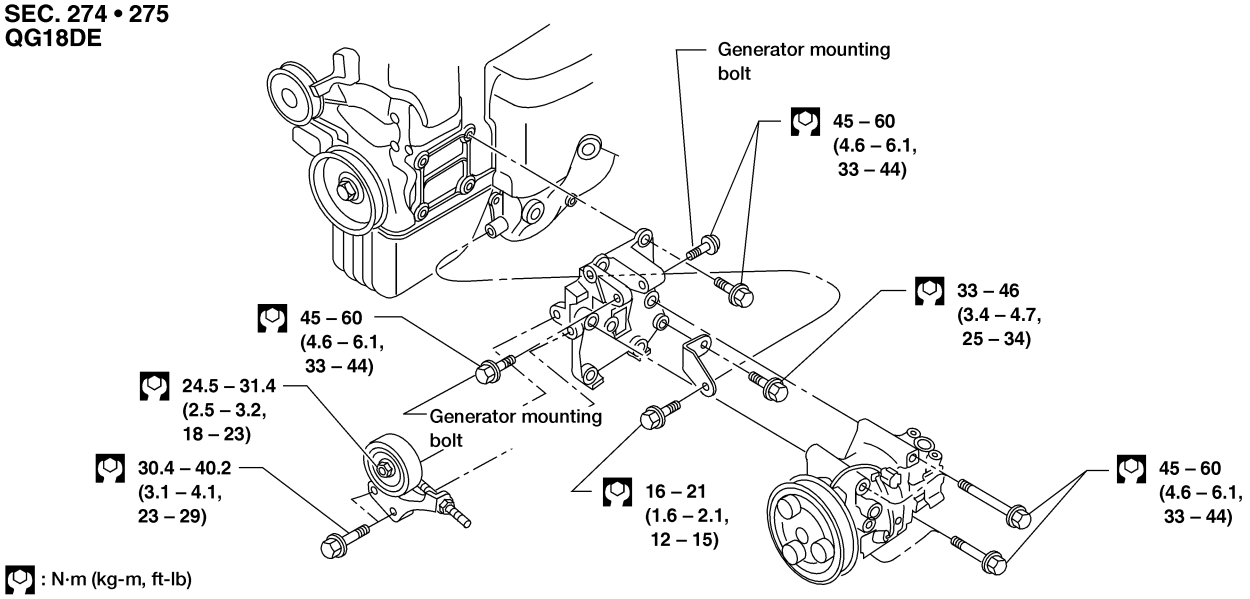

LHA121

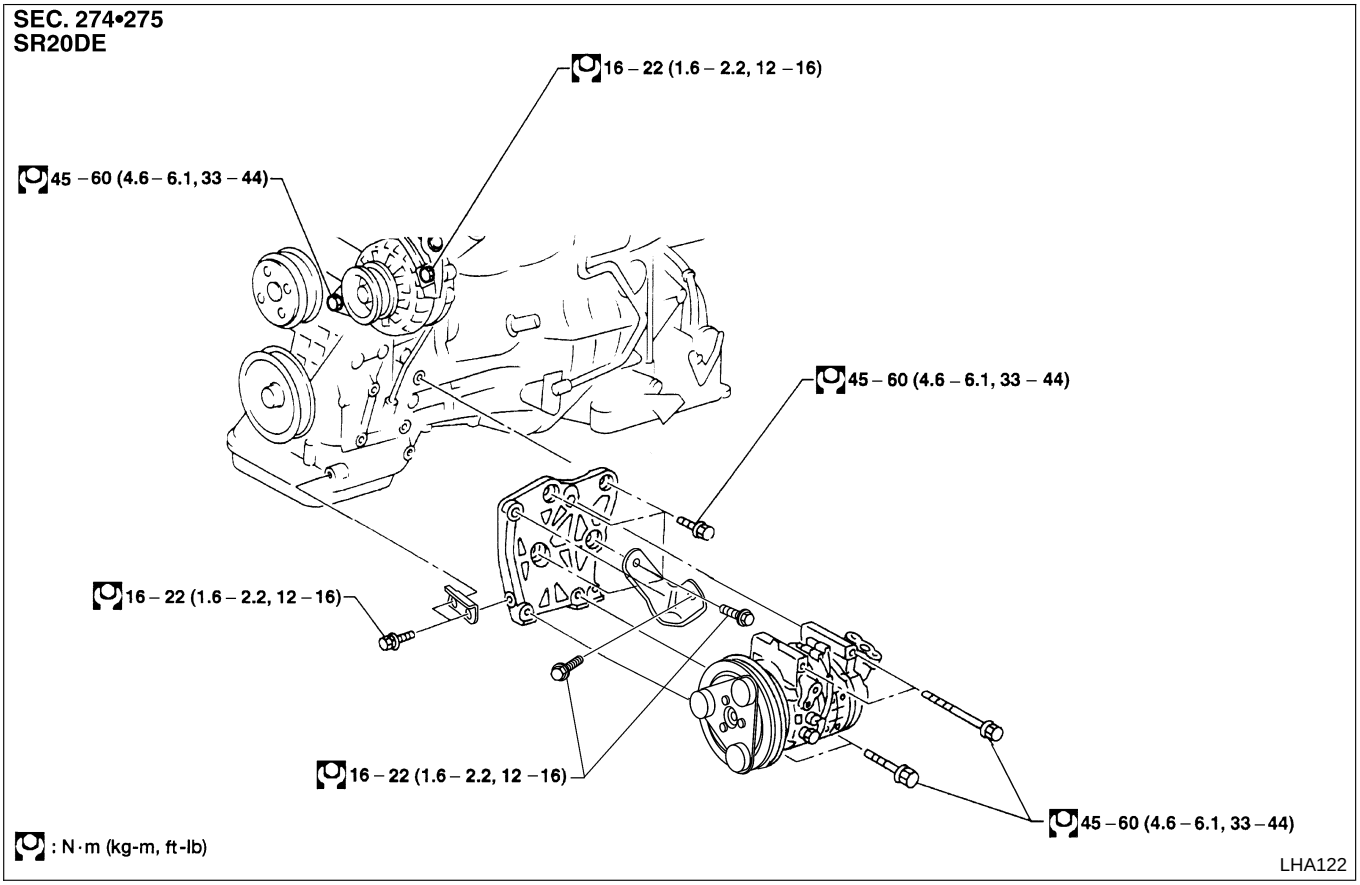

Compressor Clutch

OVERHAUL

NIHA0051

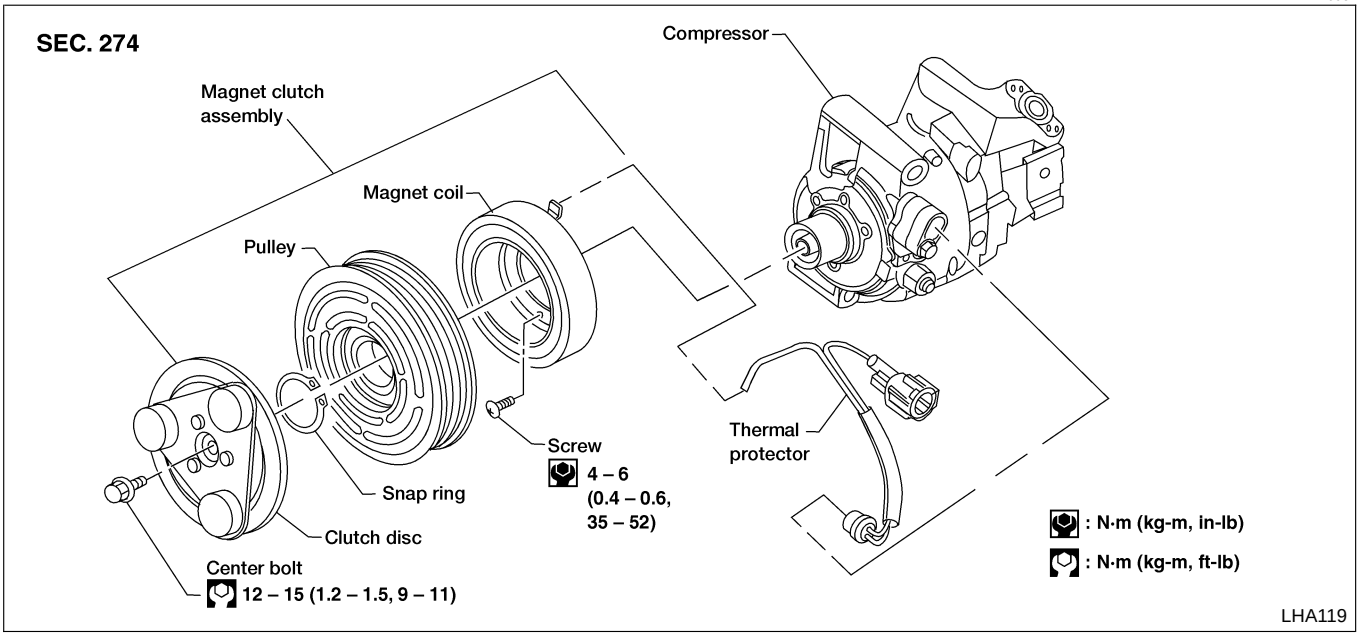

REMOVAL

NIHA0052

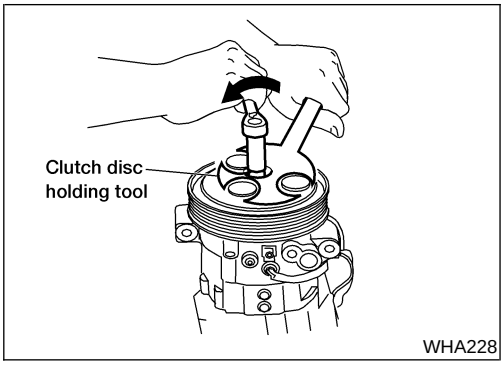

- When removing center bolt, hold clutch disc with clutch disc tool.
- Remove the clutch disc.
  Clutch disc holding tool:
  (J-44614) Comercial service tool

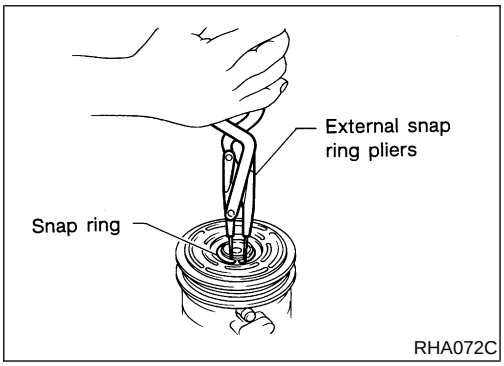

- Remove the snap ring using external snap ring pliers.

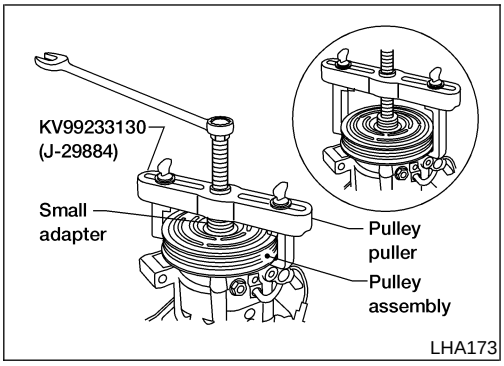

- Pulley removal:
  Use a pulley puller with small adapter. Position the small adapter on the end of the drive shaft and the center of the puller on the small adapter. Remove the pulley assembly with the puller.
  To prevent deformation of the pulley groove, the puller claws should be hooked under (not into) the pulley groove.
- Remove the snap ring using external snap ring pliers.
- Remove the magnet coil harness clip using a screwdriver, the three magnet coil fixing screws and remove the magnet coil.

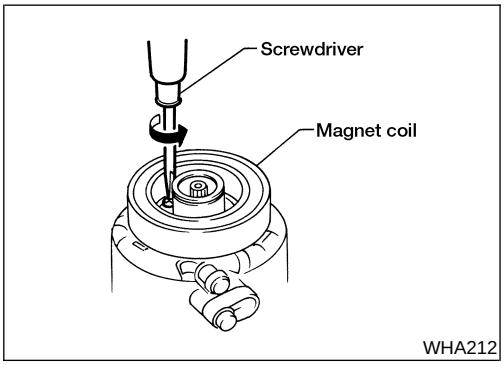

INSPECTION

NIHA0053

Clutch Disc

NIHA0053S01

If the contact surface shows signs of damage due to excessive heat, replace clutch disc and pulley.

Pulley

NIHA0053S02

Check the appearance of the pulley assembly. If contact surface of pulley shows signs of excessive grooving, replace clutch disc and pulley. The contact surfaces of the pulley assembly should be cleaned with a suitable solvent before reinstallation.

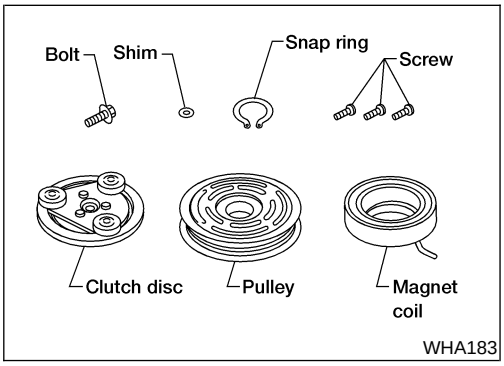

Coil

NIHA0053S03

Check magnet coil for loose connection or cracked insulation.

INSTALLATION

NIHA0054

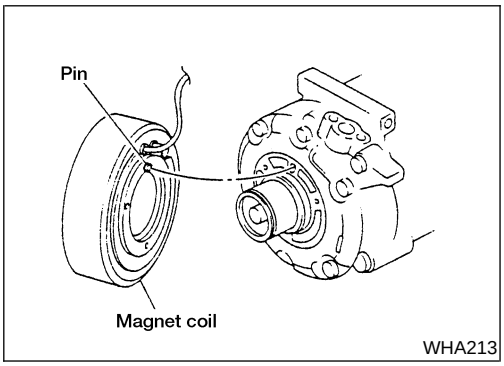

- Install the magnet coil.
  Be sure to align the magnet coil pin with the hole in the compressor front head.
- Install the magnet coil harness clip using a screwdriver.

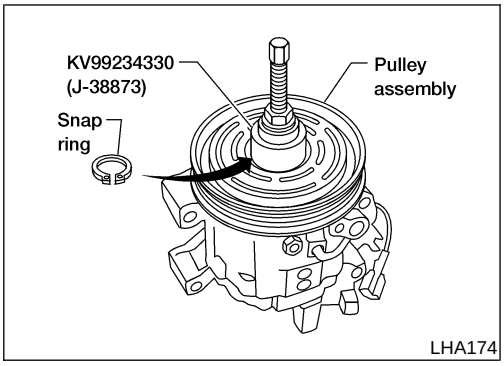

- Install the pulley assembly using the installer and a wrench, and then install the snap ring using snap ring pliers.

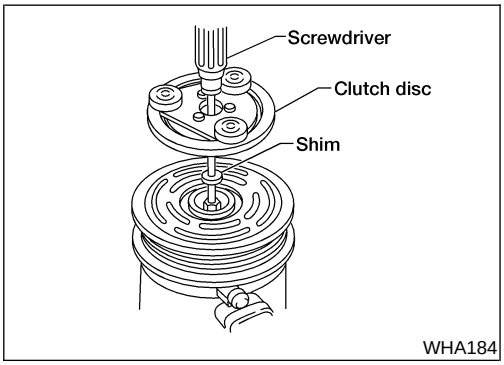

- Install the clutch disc on the drive shaft, together with the original shim(s). Press the clutch disc down by hand.

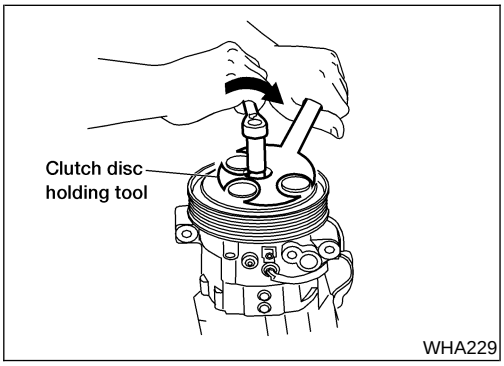

- Using the clutch disc tool to prevent clutch disc rotation, tighten the bolt to 12 to 15 N·m (1.2 to 1.5 kg-m, 9 to 11 ft-lb) torque.
- **After tightening the bolt, check that the pulley rotates smoothly.**

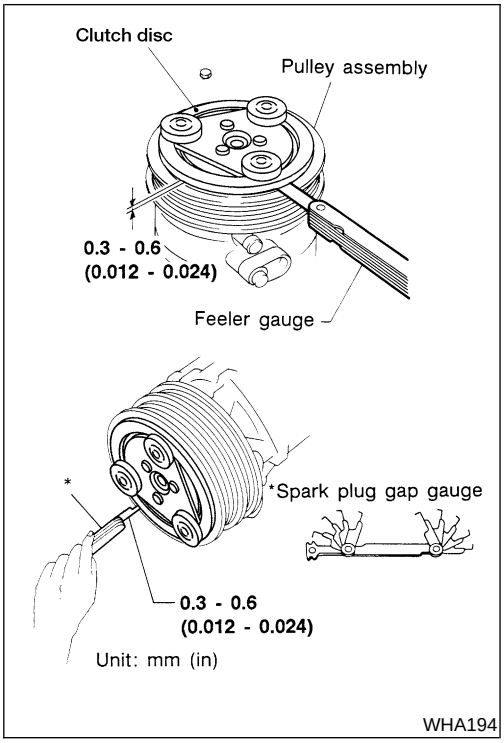

- Check clearance all the way around the clutch disc.

  Clutch disc-to-pulley clearance:
  0.3 - 0.6 mm (0.012 - 0.024 in)

  If the specified clearance is not obtained, replace adjusting spacer and readjust.

Break-in Operation

NIHA0054S01

When replacing compressor clutch assembly, always conduct the break-in operation. This is done by engaging and disengaging the clutch about 30 times. Break-in operation raises the level of transmitted torque.

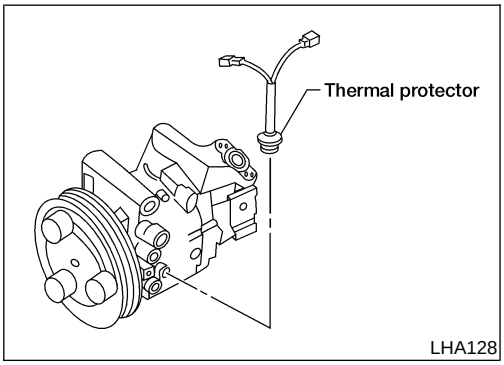

Thermal Protector

INSPECTION

NIHA0055

- When servicing, do not allow foreign matter to enter compressor.
- Check continuity between two terminals.

Heater & Cooling Unit (Heater Core)

REMOVAL

NIHA0056

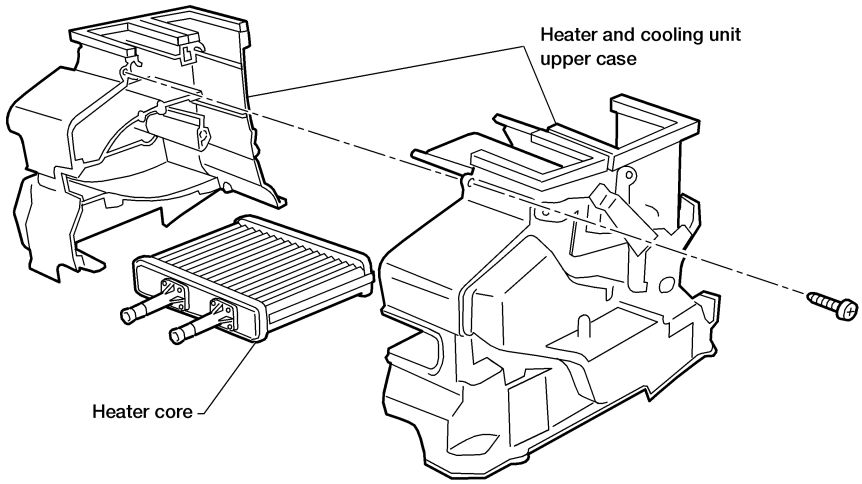

LHA203

1. Drain the cooling system. Refer to ***MA-17*** (QG18DE), or ***MA-26*** (SR20DE), “Changing Engine Coolant”.
2. Discharge the A/C system. Refer to “Discharging Refrigerant”, HA-61.
3. Disconnect the two heater hoses from inside the engine compartment.
4. Remove the cooling unit. Refer to “REMOVAL”, HA-73.
5. Remove the instrument panel assembly and steering member assembly. Refer to ***BT-21***, “INSTRUMENT PANEL ASSEMBLY”.
6. Remove the heater unit.
7. Remove the heater core.

INSTALLATION

NIHA0057

Install in the reverse order of removal.

When filling radiator with coolant, refer to *MA-17* (QG18DE), or *MA-26* (SR20DE), “Changing Engine Coolant”.

Recharge the A/C system. Refer to “Evacuating System and Charging Refrigerant”, HA-61.

Blower Unit

REMOVAL

NIHA0058

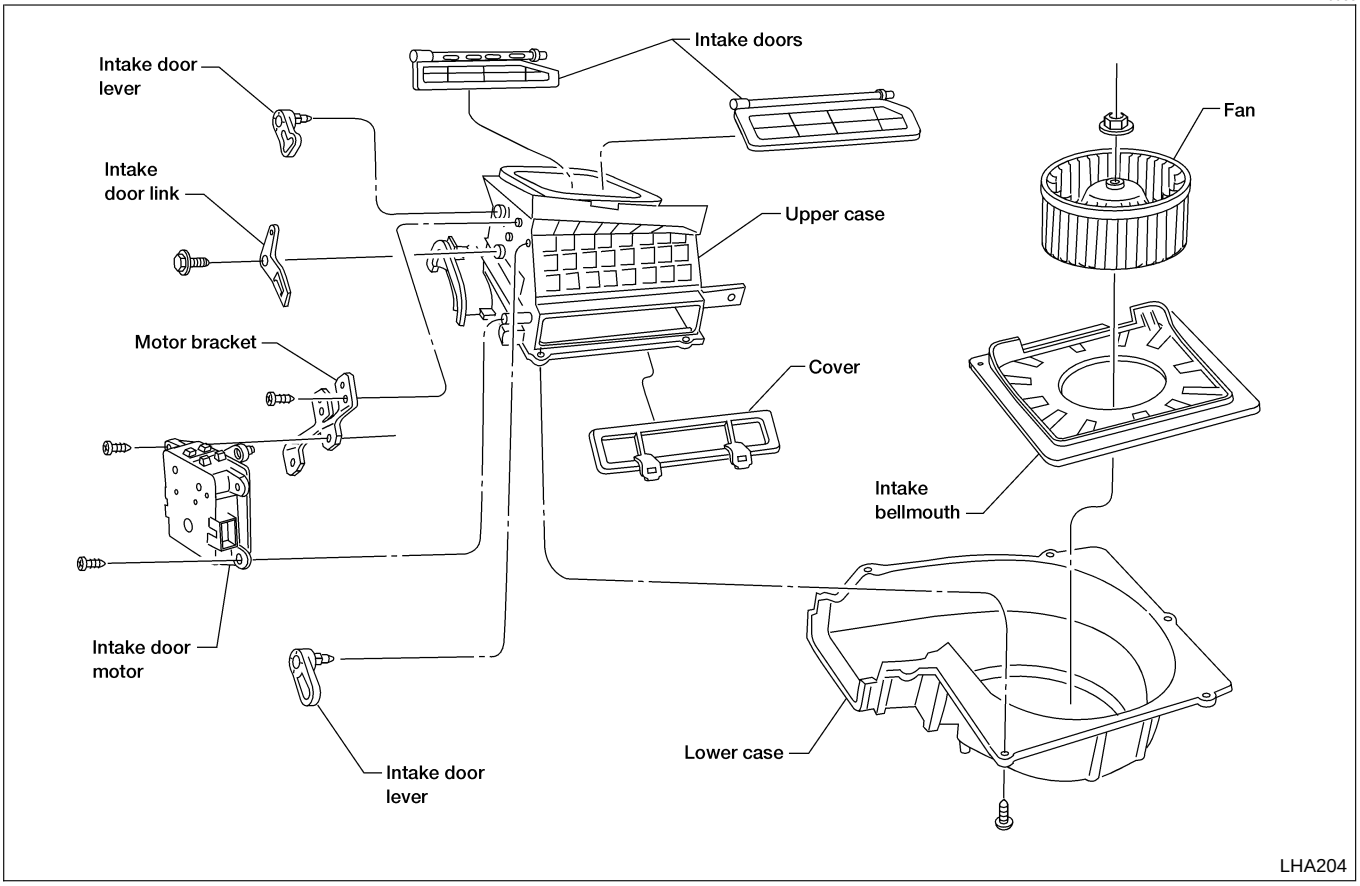

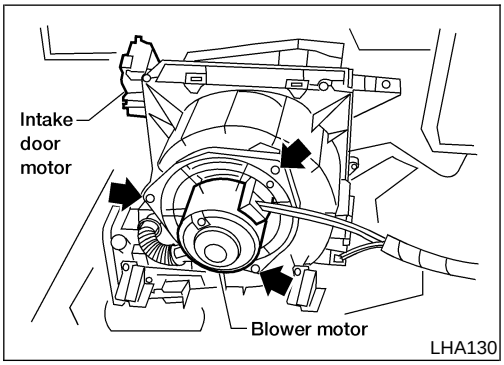

1. Discharge the A/C system. Refer to “Discharging Refrigerant”, HA-61.
2. Disconnect the two refrigerant lines from the engine compartment.
   Cap the A/C lines to prevent moisture from entering the system.
3. Remove the glove box and mating trim. Refer to ***BT-21***, “INSTRUMENT PANEL ASSEMBLY”.
4. Remove cooling unit. Refer to “REMOVAL”, HA-73.
5. Disconnect the resistor and blower motor connector.
6. Remove blower unit.
7. Remove the three bolts and then remove the motor from the blower case.

INSTALLATION

NIHA0059

Install in the reverse order of removal.

Recharge the A/C system. Refer to “Evacuating System and Charging Refrigerant”, HA-61.

A/C Evaporator

REMOVAL

NIHA0060

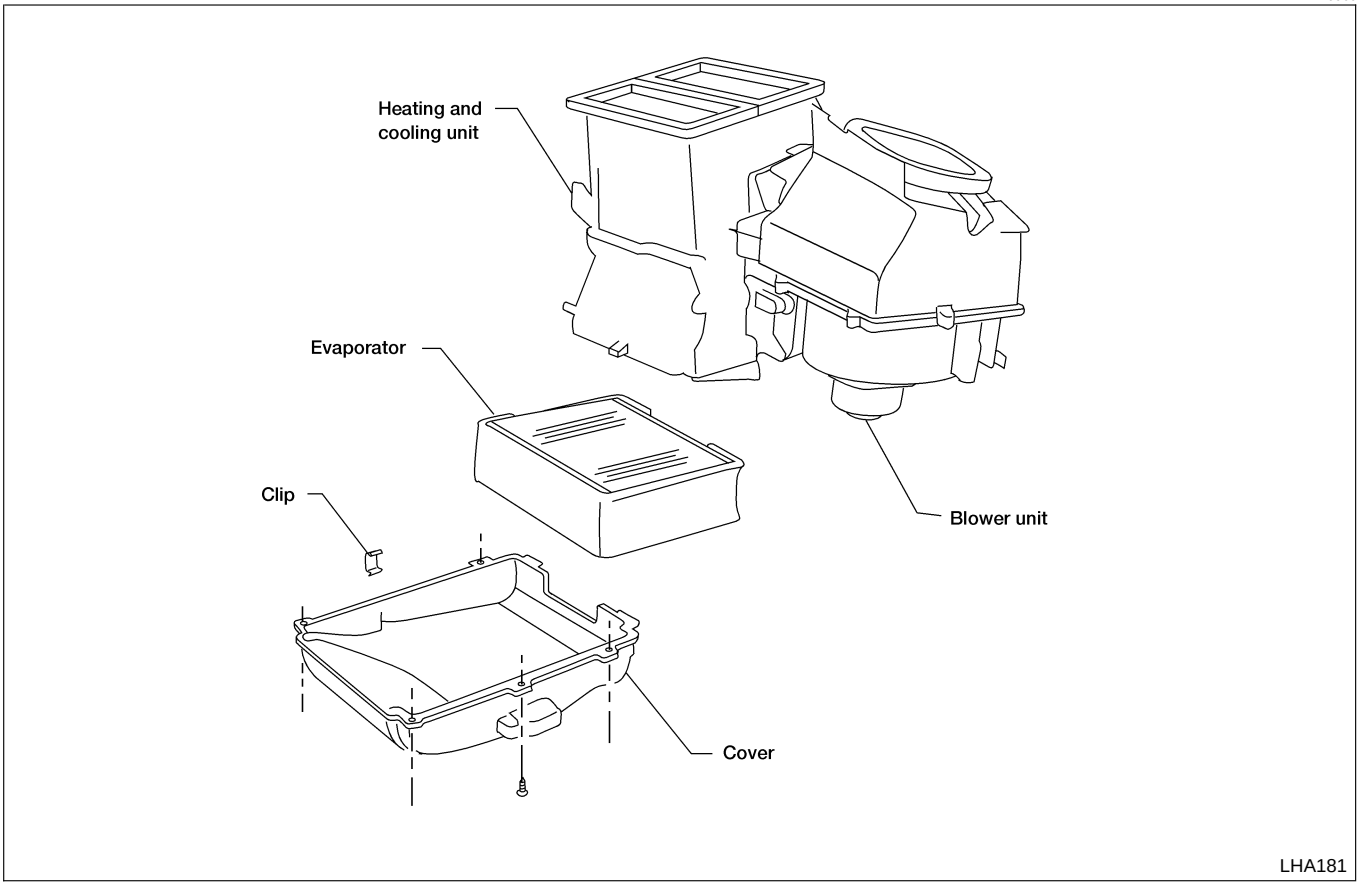

1. Discharge the A/C system. Refer to “Discharging Refrigerant”, HA-61.
2. Remove clamp bolt and remove low-pressure and high-pressure lines from cooling unit (expansion valve). Remove lines from retaining clip on dash panel and move lines away from dash panel for clearance.
3. Install caps over cooling unit (expansion valve) ports and lines.

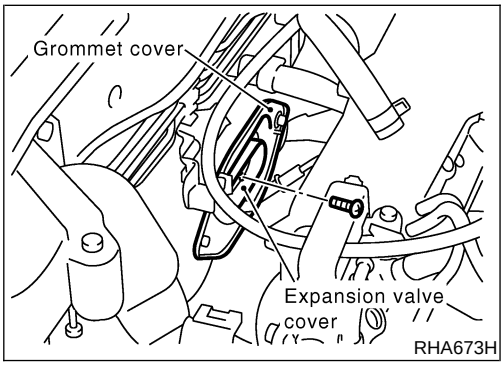

4. Remove one bolt and remove expansion valve cover and grommet cover.
5. Remove both side front console side covers.
6. Remove passenger side instrument panel lower cover and left lower instrument cover clip (from blower case).
7. Remove center console.
8. Remove instrument stay assemblies LH and RH.
9. Remove floor air duct risers on the right and left sides of the console front brackets (Canada only).
10. Disconnect cooling unit drain hose from lower cooling unit cover.

11. Remove five screws and clip from heating and cooling unit lower cover.

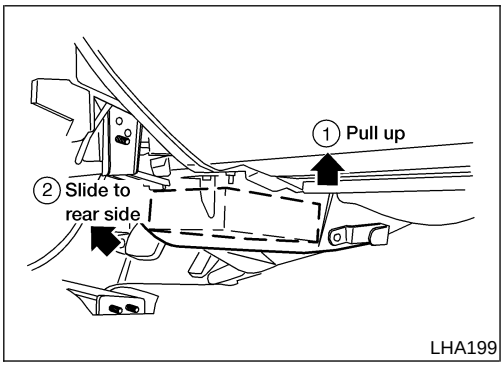

LHA199

12. Drop lower cover as far as possible, reach inside of case and slide evaporator core rearward away from dash panel as far as possible so that rear of evaporator core slides up on case retaining tabs. Evaporator core may be pushed from engine compartment to ease movement. (This provides clearance at the front of the unit so that the cover can be removed).
13. Remove lower cover.

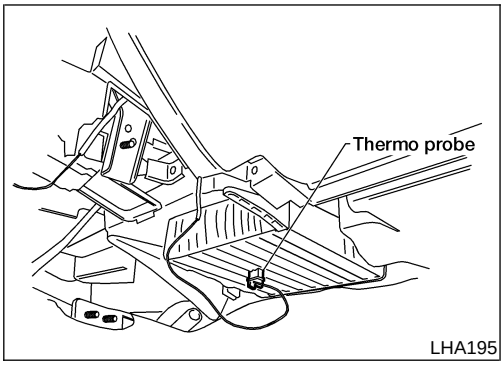

LHA195

14. Mark installation point of thermo probe and remove thermo probe from evaporator core.
15. Remove evaporator core from case by sliding forward off of case retaining tabs.
16. Remove expansion valve from evaporator core (if necessary).

INSTALLATION

NIHA0061

Installation is the reverse of removal*.

Recharge the A/C system. Refer to "Evacuating System and Charging Refrigerant" HA-61.

*: When installing lower cover to cooling unit case, ensure that the thermo probe is in the same location as originally installed, and that the thermo probe wire is properly positioned in case slot.

NOTE:

Be sure that the evaporator core is fully seated against the dash panel before securing lower cover.

Refrigerant Lines

REMOVAL AND INSTALLATION

=NIHA0062

- Refer to “Precautions for Refrigerant Connection”, HA-4.

SEC. 271 • 274 • 276

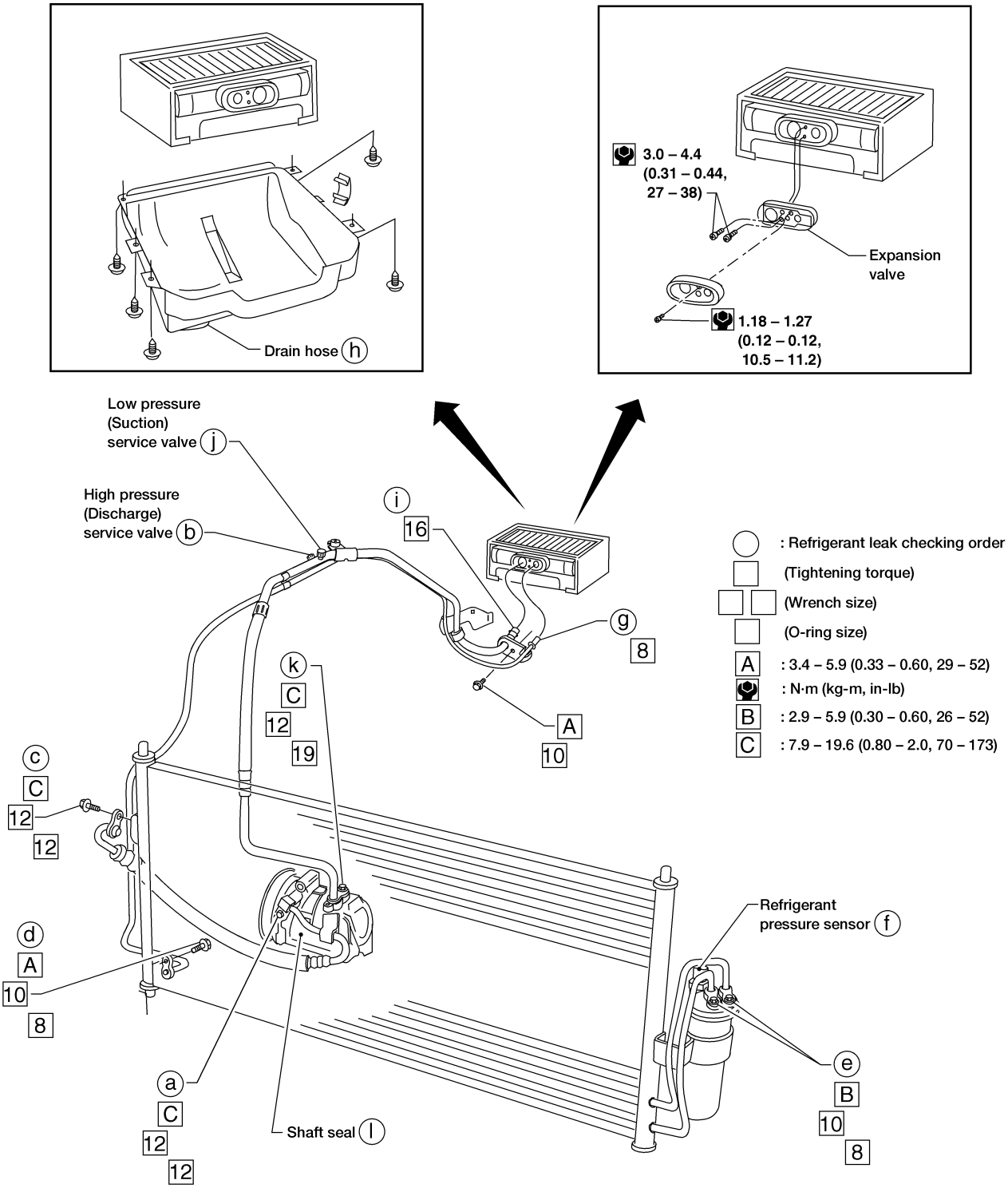

LHA120

Checking Refrigerant Leaks

=NIHA0063

PRELIMINARY CHECK

NIHA0063S01

- Perform a visual inspection of all refrigeration parts, fittings, hoses and components for signs of A/C lubricant leakage, damage and corrosion. A/C lubricant leakage may indicate an area of refrigerant leakage. Allow extra inspection time in these areas when using either an electronic refrigerant leak detector or fluorescent dye leak detector.
- If dye is observed, confirm the leak with an approved electronic refrigerant leak detector. It is possible a prior leak was repaired and not properly cleaned.
- When searching for leaks, do not stop when one leak is found but continue to check for additional leaks at all system components and connections.
- When searching for refrigerant leaks using an electronic leak detector, move the probe along the suspected leak area at 25 - 50 mm (1 - 2 in) per second an no further than 1/4 inch from the component.

NOTE:
Moving the electronic leak detector probe slower and closer to the suspected leak area will improve the chances of finding a leak.

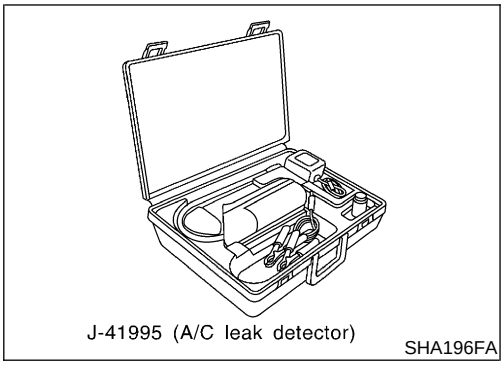

Electronic Refrigerant Leak Detector

NIHA0093

PRECAUTIONS FOR HANDLING LEAK DETECTOR

NIHA0093S01

When performing a refrigerant leak check, use a J-41995 electronic refrigerant leak detector or equivalent. Ensure that the instrument is calibrated and set properly per the operating instructions.
The leak detector is a delicate device. In order to use the leak detector properly, read the operating instructions and perform any specified maintenance.

- **Other gases in the work area or substances on the A/C components, for example, anti-freeze, windshield washer fluid, solvents and lubricants, may falsely trigger the leak detector. Make sure the surfaces to be checked are clean. Clean with a dry cloth or blow off with shop air.**
- **Do not allow the sensor tip of the detector to contact with any substance. This can also cause false readings and may damage the detector.**

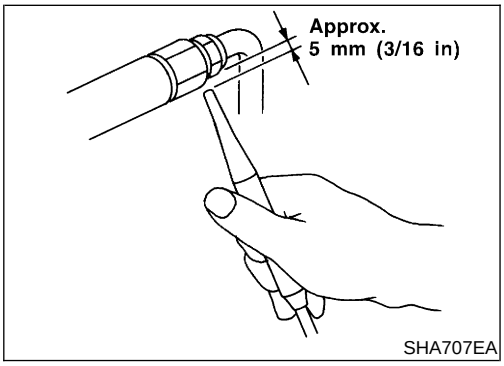

1. Position probe approximately 5 mm (3/16 in) away from point to be checked.

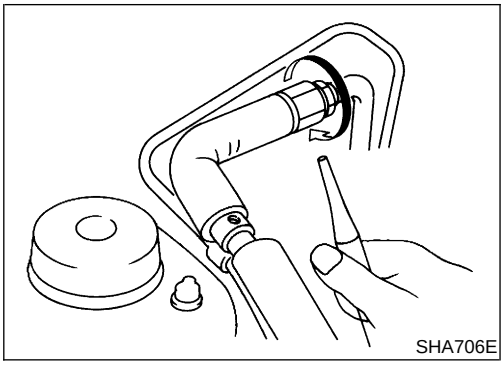
SHA706E

2. When testing, circle each fitting completely with probe.

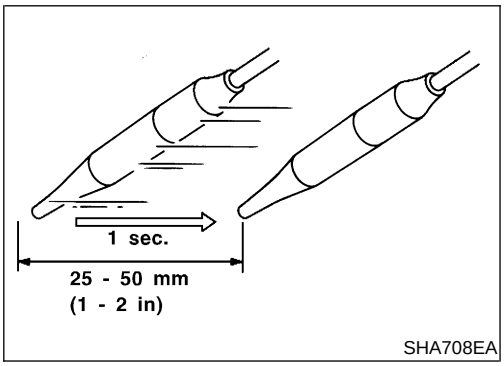

SHA708EA

3. Move probe along component approximately 25 to 50 mm (1 to 2 in)/sec.

CHECKING PROCEDURE

NIHA0093S02

To prevent inaccurate or false readings, make sure there is no refrigerant vapor, shop chemicals, or cigarette smoke in the vicinity of the vehicle. Perform the leak test in calm area (low air/wind movement) so that the leaking refrigerant is not dispersed.

1. Turn engine off.
2. Connect a suitable A/C manifold gauge set to the A/C service ports.
3. Check if the A/C refrigerant pressure is at least 345 kPa (3.52 kg/cm^2, 50 psi) above 16°C (61°F). If less than specification, recover/evacuate and recharge the system with the specified amount of refrigerant. Refer to "HFC-134a (R-134a) Service Procedure", HA-61.

NOTE:
At temperatures below 16°C (61°F), leaks may not be detected since the system may not reach 345 kPa (3.52 kg/cm^2, 50 psi).

4. Conduct the leak test from the high side (compressor discharge **a** to evaporator inlet **g**) to the low side (evaporator drain hose **g** to shaft seal **l**). Refer to "Refrigerant Lines", HA-75. Perform a leak check for the following areas carefully. Clean the component to be checked and move the leak detector probe completely around the connection/component.

- **Compressor**
  Check the fitting of high and low pressure hoses, relief valve and shaft seal.
- **Liquid tank**
  Check the pressure switch, tube fitting, weld seams and the fusible plug mount.
- **Service valves**
  Check all around the service valves. Ensure service valve caps are secured on the service valves (to prevent leaks).

NOTE:
After removing A/C manifold gauge set from service valves, wipe any residue from valves to prevent any false readings by leak detector.

- **Cooling unit (Evaporator)**
  With engine OFF, turn blower fan on "High" for at least 15 seconds to dissipate any refrigerant trace in the cooling unit. Wait a minimum of 10 minutes accumulation time (refer to the manufacturer's recommended procedure for actual wait time) before inserting the leak detector probe into the drain hose. Keep the probe inserted for at least ten seconds. Use caution not to contaminate the probe tip with water or dirt that may be in the drain hose.

5. If a leak detector detects a leak, verify at least once by blowing compressed air into area of suspected leak, then repeat check as outlined above.
6. Do not stop when one leak is found. Continue to check for additional leaks at all system components.
   If no leaks are found, perform steps 7 - 10.
7. Start engine.
8. Set the heater A/C control as follows:

1) A/C switch ON.
2) Face mode
3) Recirculation switch ON
4) Max cold temperature
5) Fan speed high

9. Run engine at 1,500 rpm for at least 2 minutes.
10. Turn engine off and perform leak check again following steps 4 through 6 above.

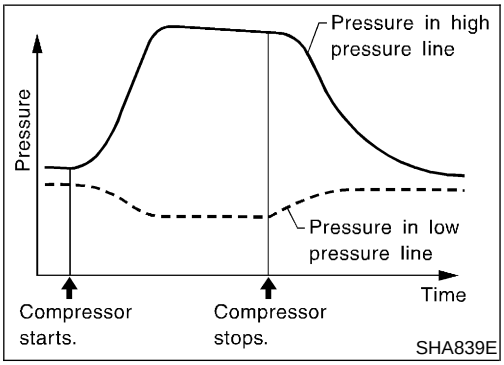

Refrigerant leaks should be checked immediately after stopping the engine. Begin with the leak detector at the compressor. The pressure on the high pressure side will gradually drop after refrigerant circulation stops and pressure on the low pressure side will gradually rise, as shown in the graph. Some leaks are more easily detected when pressure is high.

11. Before connecting ACR4 to vehicle, check ACR4 gauges. No refrigerant pressure should be displayed. If pressure is displayed, recover refrigerant from equipment lines and then check refrigerant purity.
12. Confirm refrigerant purity in supply tank using ACR4 and refrigerant identifier. Refer to "Contaminated Refrigerant", HA-3.
13. Confirm refrigerant purity in vehicle A/C system using ACR4 and refrigerant identifier. Refer to "Contaminated Refrigerant", HA-3.
14. Discharge A/C system using approved refrigerant recovery equipment. Refer to "Discharging Refrigerant", HA-61. Repair

the leaking fitting or component as necessary.

15. Evacuate and recharge A/C system. Refer to "Evacuating System and Charging Refrigerant", HA-61. Perform the leak test to confirm no refrigerant leaks.
16. Conduct A/C performance test to ensure system works properly.

Fluorescent Dye Leak Detector

NIHA0094

PRECAUTIONS FOR FLUORESCENT DYE LEAK DETECTION

NIHA0094S01

- The fluorescent dye leak detector is not a replacement for an electronic refrigerant leak detector. The fluorescent dye leak detector should be used in conjunction with an electronic refrigerant leak detector (J-41995) to pinpoint refrigerant leaks.
- For your safety and your customer's satisfaction, read and follow all manufacturer's operating instructions and precautions prior to performing the work.
- Refer to "Precautions for Leak Detection Dye", HA-3.

CHECKING SYSTEM FOR LEAKS USING THE FLUORESCENT LEAK DETECTOR

NIHA0094S02

1. Check A/C system for leaks using the UV lamp and safety glasses (J-42220) in a low sunlight area (area without windows preferable). Illuminate all components, fittings and lines. The dye will appear as a bright green/yellow area at the point of leakage. Fluorescent dye observed at the evaporator drain opening indicates an evaporator core assembly (tubes, core or TXV) leak.
2. If the suspected area is difficult to see, use an adjustable mirror or wipe the area with a clean shop rag or cloth, then check the cloth with the UV lamp for dye residue.
3. Confirm any suspected leaks with an approved electronic refrigerant leak detector.
4. After the leak is repaired, remove any residual dye using dye cleaner (J-43872) to prevent future misdiagnosis.
5. Perform a system performance check and verify the leak repair with an approved electronic refrigerant leak detector.

DYE INJECTION

NIHA0094S03

(This procedure is only necessary when re-charging the system or when the compressor has seized and was replaced.)
Refer to "Precautions for Leak Detection Dye", HA-3.

1. Check A/C system static (at rest) pressure. Pressure must be at least 345 kPa (3.52 kg/cm^2, 50 psi).
2. Pour one bottle (1/4 ounce / 7.4 cc) of the A/C refrigerant dye into the injector tool (J-41459).
3. Connect the injector tool to the A/C LOW PRESSURE side service fitting.
4. Start engine and switch A/C ON.
5. With the A/C operating (compressor running), inject one bottle (1/4 ounce / 7.4 cc) of fluorescent dye through the low-pressure service valve using dye injector tool J-41459 (refer to the manufacturer's operating instructions).

6. With the engine still running, disconnect the injector tool from the service fitting.

CAUTION:
Be careful not to allow dye to spray or drip when disconnecting the injector from the system.

NOTE:
If repairing the A/C system or replacing a component, pour the dye directly into the open system connection and proceed with the service procedures.

7. Operate the A/C system for a minimum of 20 minutes to mix the dye with the system oil. Depending on the leak size, operating conditions and location of the leak, it may take from minutes to days for the dye to penetrate a leak and become visible.

Belt

TENSION ADJUSTMENT

NIHA0064

- **Refer to *MA-16* (QG18DE) or *MA-25* (SR20DE), "Checking Drive Belts".**

Idle Air Control Valve (IACV) — Auxiliary Air Control (AAC) Valve

INSPECTION

NIHA0065

- **Refer to *EC-452* [QG18DE (except Calif. CA Model)], or *EC-1105* [QG18DE (Calif. CA Model)], or *EC-1764* (SR20DE), "System Description".**

General Specifications

NIHA0097

COMPRESSOR

NIHA0097S01

Model	ZEXEL make DKV-11G
Type	Vane rotary
Displacement cm^3 (cu in)/rev.	110 (6.71)
Direction of rotation	Clockwise (viewed from drive end)
Drive belt	Poly V

LUBRICANT

NIHA0097S02

Model		ZEXEL make DKV-11G
Name		Nissan A/C System Oil Type R
Part number		KLH00-PAGR0
Capacity mℓ (US fl oz, Imp fl oz)	Total in system	180 (6.1, 6.3)
	Compressor (Service part) charging amount	180 (6.1, 6.3)

REFRIGERANT

NIHA0097S03

Type	HFC-134a (R-134a)
Capacity kg (lb)	0.45 - 0.55 (0.99 - 1.21)

Inspection and Adjustment

NIHA0098

ENGINE IDLING SPEED (WHEN A/C IS ON)

NIHA0098S01

- **Refer to *EC-698* [QG18DE (except Calif. CA Model)], *EC-1359* [QG18DE (Calif. CA Model)], or *EC-1943* (SR20DE), "Idle Speed and Ignition Timing".**

BELT TENSION

NIHA0098S02

- **Refer to *MA-16* (QG18DE), or *MA-25* (SR20DE), "Checking Drive Belts".**

NOTES