SECTION MWI
METER, WARNING LAMP & INDICATOR

CONTENTS

BASIC INSPECTION 3

DIAGNOSIS AND REPAIR WORKFLOW 3
Work Flow 3

FUNCTION DIAGNOSIS 4

METER SYSTEM 4

METER SYSTEM 4
METER SYSTEM : System Diagram 4
METER SYSTEM : System Description 4
METER SYSTEM : Arrangement of Combination Meter 5
METER SYSTEM : Component Parts Location 6
METER SYSTEM : Component Description 6

SPEEDOMETER 7
SPEEDOMETER : System Diagram 7
SPEEDOMETER : System Description 7
SPEEDOMETER : Component Parts Location 7
SPEEDOMETER : Component Description 8

TACHOMETER 8
TACHOMETER : System Diagram 8
TACHOMETER : System Description 8
TACHOMETER : Component Parts Location 9
TACHOMETER : Component Description 9

ENGINE COOLANT TEMPERATURE GAUGE 9
ENGINE COOLANT TEMPERATURE GAUGE : System Diagram 9
ENGINE COOLANT TEMPERATURE GAUGE : System Description 10
ENGINE COOLANT TEMPERATURE GAUGE : Component Parts Location 10
ENGINE COOLANT TEMPERATURE GAUGE : Component Description 10

FUEL GAUGE 10
FUEL GAUGE : System Diagram 11
FUEL GAUGE : System Description 11
FUEL GAUGE : Component Parts Location 11
FUEL GAUGE : Component Description 12

ENGINE OIL PRESSURE GAUGE 12
ENGINE OIL PRESSURE GAUGE : System Diagram 12
ENGINE OIL PRESSURE GAUGE : System Description 12
ENGINE OIL PRESSURE GAUGE : Component Parts Location 12
ENGINE OIL PRESSURE GAUGE : Component Description 13

VOLTAGE GAUGE 13
VOLTAGE GAUGE : System Diagram 13
VOLTAGE GAUGE : System Description 13
VOLTAGE GAUGE : Component Parts Location 14
VOLTAGE GAUGE : Component Description 14

ODO/TRIP METER 14
ODO/TRIP METER : System Diagram 14
ODO/TRIP METER : System Description 15
ODO/TRIP METER : Component Parts Location 15
ODO/TRIP METER : Component Description 15

SHIFT POSITION INDICATOR 15
SHIFT POSITION INDICATOR : System Diagram 16
SHIFT POSITION INDICATOR : System Description 16
SHIFT POSITION INDICATOR : Component Parts Location 16
SHIFT POSITION INDICATOR : Component Description 17

WARNING LAMPS/INDICATOR LAMPS 17
WARNING LAMPS/INDICATOR LAMPS : System Diagram 17
WARNING LAMPS/INDICATOR LAMPS : System Description 17
WARNING LAMPS/INDICATOR LAMPS : Component Parts Location 17
WARNING LAMPS/INDICATOR LAMPS : Component Description 18

TRIP COMPUTER 18
TRIP COMPUTER : System Diagram 18
TRIP COMPUTER : System Description 18
TRIP COMPUTER : Component Parts Location ... 19
TRIP COMPUTER : Component Description 19

COMPASS 21
Description 21

DIAGNOSIS SYSTEM (METER) 23
Diagnosis Description 23
CONSULT-III Function (METER/M&A) 24

COMPONENT DIAGNOSIS 27

DTC U1000 CAN COMMUNICATION 27
DTC Logic 27
Diagnosis Procedure 27

DTC B2205 VEHICLE SPEED CIRCUIT 28
Description 28
DTC Logic 28
Diagnosis Procedure 28

POWER SUPPLY AND GROUND CIRCUIT 29

COMBINATION METER 29
COMBINATION METER : Diagnosis Procedure ... 29

BCM (BODY CONTROL MODULE) 29
BCM (BODY CONTROL MODULE) : Diagnosis Procedure 29

IPDM E/R (INTELLIGENT POWER DISTRIBUTION MODULE ENGINE ROOM) 30
IPDM E/R (INTELLIGENT POWER DISTRIBUTION MODULE ENGINE ROOM) : Diagnosis Procedure 30

FUEL LEVEL SENSOR SIGNAL CIRCUIT 32
Description 32
Component Function Check 32
Diagnosis Procedure 32
Component Inspection 33

OIL PRESSURE SWITCH SIGNAL CIRCUIT ... 34
Description 34
Component Function Check 34
Diagnosis Procedure 34
Component Inspection 34

COMPASS 35
Wiring Diagram 35

ECU DIAGNOSIS 37

COMBINATION METER 37
Reference Value 37
Wiring Diagram 39
Fail Safe 54
DTC Index 56

BCM (BODY CONTROL MODULE) 57
Reference Value 57
Terminal Layout 60
Physical Values 60
Wiring Diagram 66
Fail Safe 69
DTC Inspection Priority Chart 70
DTC Index 70

IPDM E/R (INTELLIGENT POWER DISTRIBUTION MODULE ENGINE ROOM) 72
Reference Value 72
Terminal Layout 74
Physical Values 74
Wiring Diagram 78
Fail Safe 81
DTC Index 83

SYMPTOM DIAGNOSIS 84

THE FUEL GAUGE POINTER DOES NOT MOVE 84
Description 84
Diagnosis Procedure 84

THE FUEL GAUGE POINTER DOES NOT MOVE TO "F" WHEN REFUELING 85
Description 85
Diagnosis Procedure 85

THE OIL PRESSURE WARNING LAMP DOES NOT TURN ON 86
Description 86
Diagnosis Procedure 86

THE OIL PRESSURE WARNING LAMP DOES NOT TURN OFF 87
Description 87
Diagnosis Procedure 87

NORMAL OPERATING CONDITION 88

COMPASS 88
COMPASS : Description 88

PRECAUTION 89

PRECAUTIONS 89
Supplemental Restraint System (SRS) "AIR BAG" and "SEAT BELT PRE-TENSIONER" 89

ON-VEHICLE REPAIR 90

COMBINATION METER 90
Removal and Installation 90

BASIC INSPECTION

DIAGNOSIS AND REPAIR WORKFLOW

Work Flow

INFOID:0000000004095243

DETAILED FLOW

1. CONFIRM SYMPTOM

Confirm symptom or customer complaint.

>> GO TO 2

2. CHECK SELF-DIAGNOSIS OPERATION OF COMBINATION METER

Perform self-diagnosis of combination meter. Refer to MWI-23, "Diagnosis Description".

Does self-diagnosis mode operate?

YES >> GO TO 3
NO >> Check power supply and ground circuit of combination meter. Refer to MWI-29, "COMBINATION METER : Diagnosis Procedure". Then, GO TO 4

3. CHECK COMBINATION METER (CONSULT-III)

Select “METER/M&A” on CONSULT-III and perform “SELF-DIAGNOSIS” of combination meter. Refer to MWI-24, "CONSULT-III Function (METER/M&A)".

Self-diagnostic results content

No malfunction detected>>Repair or replace the cause of symptom. Then, GO TO 4
Malfunction detected>>Refer to MWI-56, "DTC Index". Then, GO TO 4

4. CONFIRM OPERATION

Does the combination meter operate normally?

YES or NO

YES >> Inspection End.
NO >> GO TO 1

FUNCTION DIAGNOSIS

METER SYSTEM

METER SYSTEM

METER SYSTEM : System Diagram

INFOID:0000000004095244

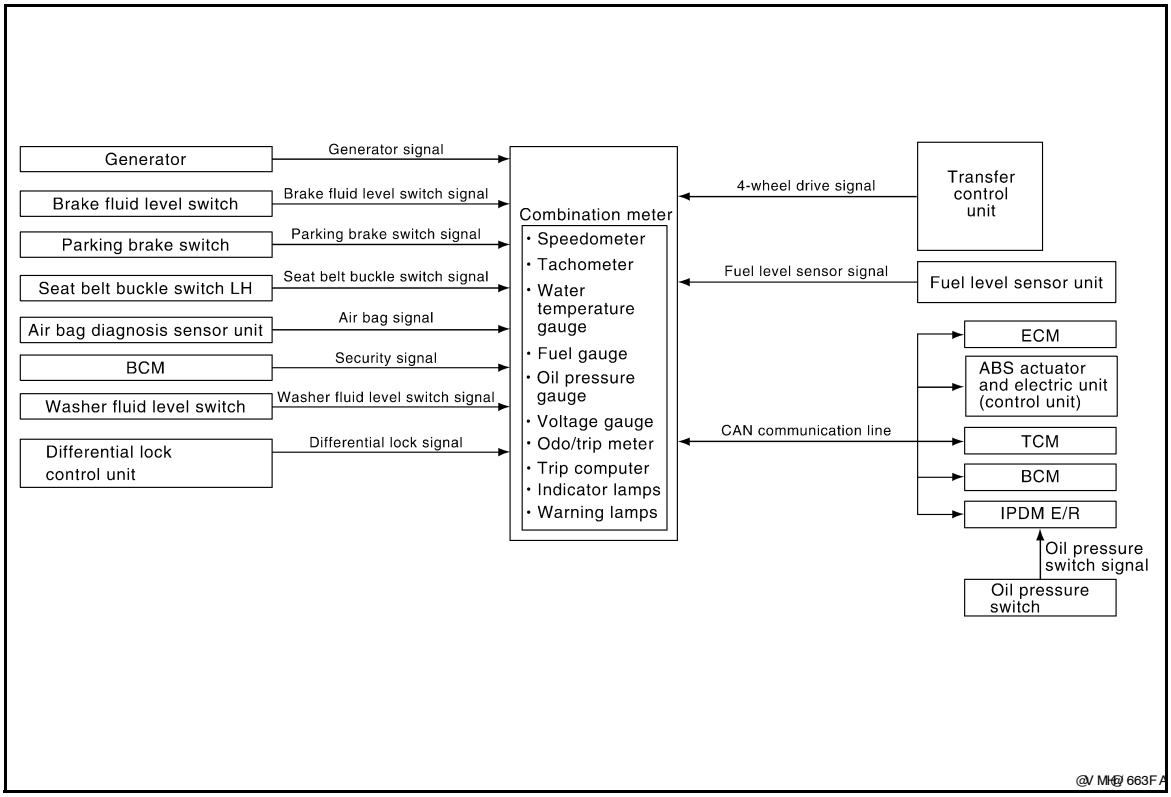

METER SYSTEM : System Description

INFOID:0000000004095245

COMBINATION METER

- Speedometer, odo/trip meter, tachometer, fuel gauge, engine coolant temperature gauge, engine oil pressure gauge, voltage gauge and trip computer are controlled by the unified meter control unit, which is built into the combination meter.
- Warning and indicator lamps are controlled by the unified meter control unit and by components connected directly to the combination meter.
- Digital meter is adopted for odo/trip meter*, as well as the A/T position indicator display.
  *The record of the odometer is kept even if the battery cable is disconnected. The record of the trip meter is erased when the battery cable is disconnected.
- Odo/trip meter and A/T indicator segments can be checked in diagnosis mode.
- Meter/gauge can be checked in diagnosis mode.

NOTE:

Under the following conditions, the meters will perform a homing function. The meter pointers will move down slightly and then move back to the resting position. This is a normal design condition.

- Approximately 60 seconds after turning the ignition switch from the ON to the OFF position
- If the battery is disconnected and then reconnected

METER SYSTEM : Arrangement of Combination Meter

INFOID:0000000004095246

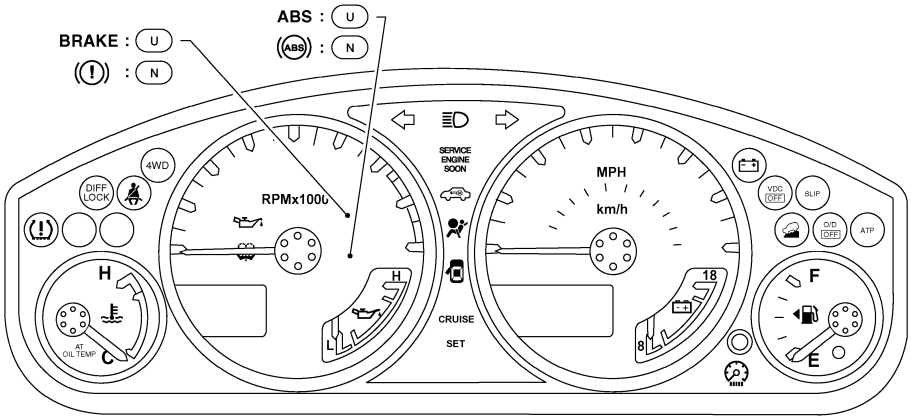

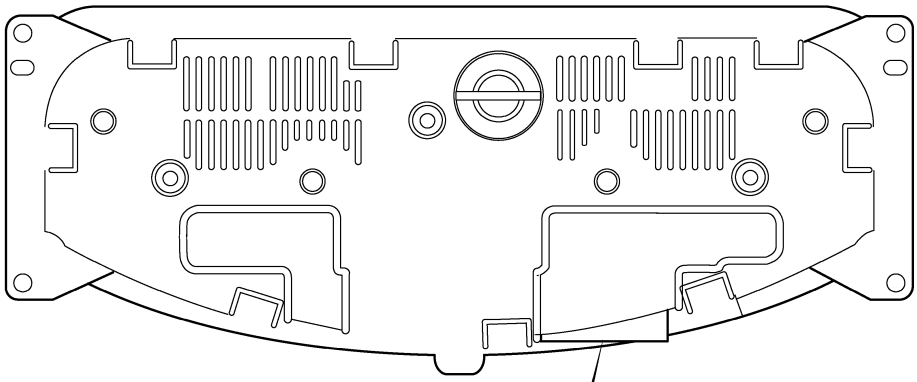

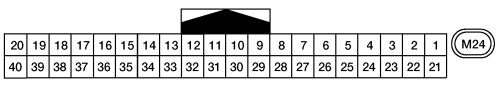

(N) : Canada

(U) : USA

V J H 8876D

METER SYSTEM : Component Parts Location

INFOID:0000000004095247

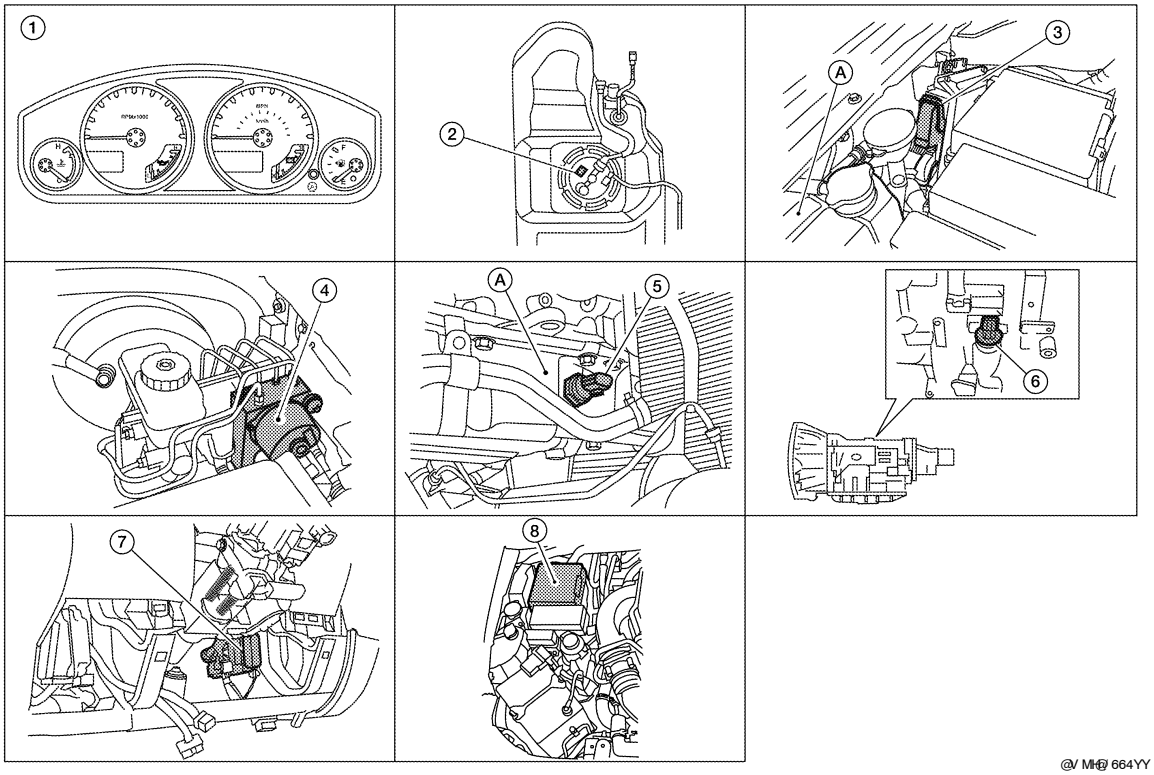

@V MH@ 664YY

1. Combination meter M24
2. Fuel level sensor unit and fuel pump C5 (view with fuel tank removed)
3. ECM E16 (view with ECM cover removed)
   A. Coolant reservoir
4. ABS actuator and electric unit (control unit) E125
5. Oil pressure switch E208
   A. Oil pan (upper)
6. A/T assembly F9
7. BCM M18, M19 (view with lower instrument panel LH removed)
8. IPDM E/R E122, E124

METER SYSTEM : Component Description

INFOID:0000000004095248

Unit	Description
Combination meter	Controls the following with the signals received from each unit via CAN communication and the signals from switches and sensors. • Speedometer • Tachometer • Engine coolant temperature gauge • Fuel gauge • Engine oil pressure gauge • Odo/trip meter • Voltage gauge • Indicator lamps • Warning lamps • Warning chime • Trip computer
IPDM E/R	IPDM E/R reads the ON/OFF signals of the oil pressure switch and transmits the oil pressure switch signal to the combination meter via BCM with CAN communication line.
Fuel level sensor unit	Refer to MWI-32, "Description".
Oil pressure switch	Refer to MWI-34, "Description".
ECM	Transmits the following signals to the combination meter with CAN communication line. • Engine speed signal • Engine coolant temperature signal • Fuel consumption monitor signal

Unit	Description
ABS actuator and electric unit (control unit)	Transmits the vehicle speed signal to the combination meter with CAN communication line.
BCM	• Transmits signals provided by various units to the combination meter with CAN communication line. • Transmits the security signal to the combination meter.
TCM	Transmits shift position signal to the combination meter with CAN communication line.

SPEEDOMETER

SPEEDOMETER : System Diagram

INFOID:0000000004095249

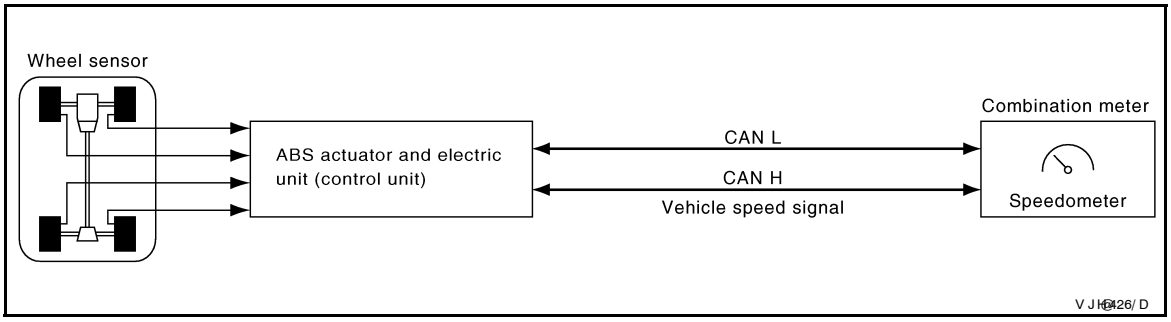

SPEEDOMETER : System Description

INFOID:0000000004095250

The ABS actuator and electric unit (control unit) provides a vehicle speed signal to the combination meter via CAN communication lines.

SPEEDOMETER : Component Parts Location

INFOID:0000000004469746

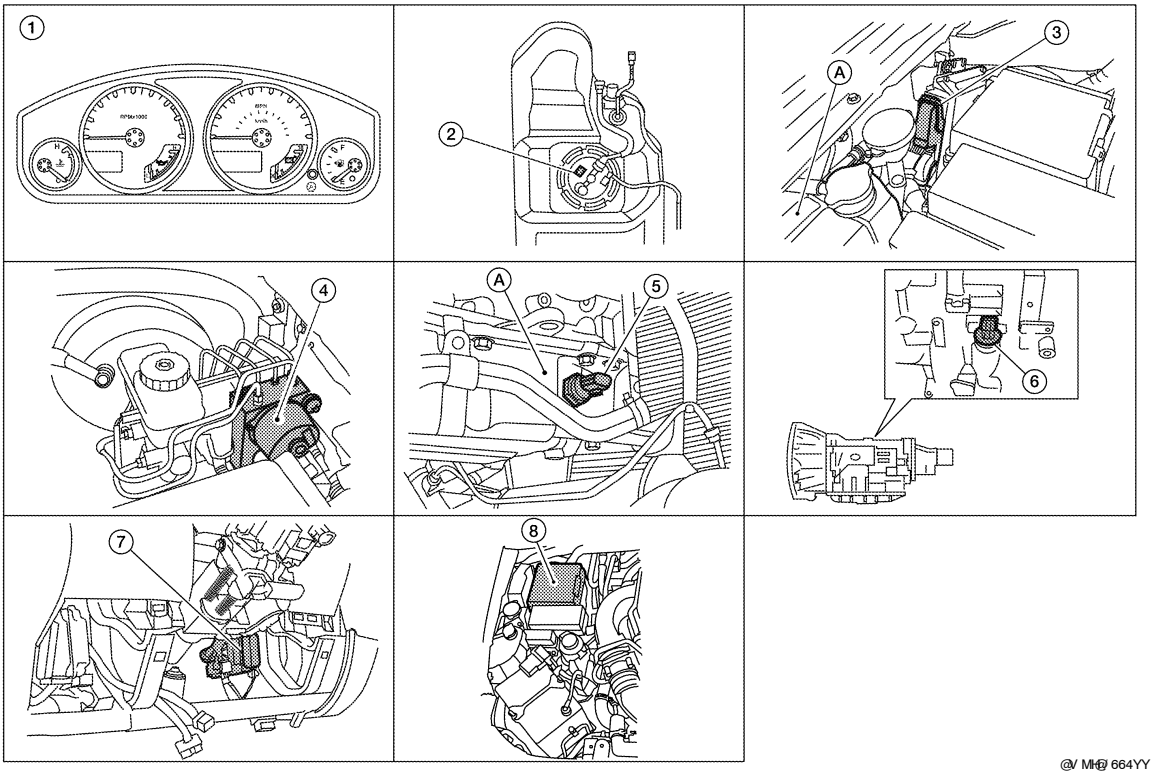

1. Combination meter M24
2. Fuel level sensor unit and fuel pump C5 (view with fuel tank removed)
3. ECM E16 (view with ECM cover removed)
   A. Coolant reservoir
4. ABS actuator and electric unit (control unit) E125
5. Oil pressure switch E208
   A. Oil pan (upper)
6. A/T assembly F9
7. BCM M18, M19 (view with lower instrument panel LH removed)
8. IPDM E/R E122, E124

SPEEDOMETER : Component Description

INFOID:0000000004095252

Unit	Description
Combination meter	Indicates the vehicle speed according to the vehicle speed signal received from ABS actuator and electric unit (control unit) via CAN communication.
ABS actuator and electric unit (control unit)	Transmits the vehicle speed signal to the combination meter with CAN communication line.

TACHOMETER

TACHOMETER : System Diagram

INFOID:0000000004095253

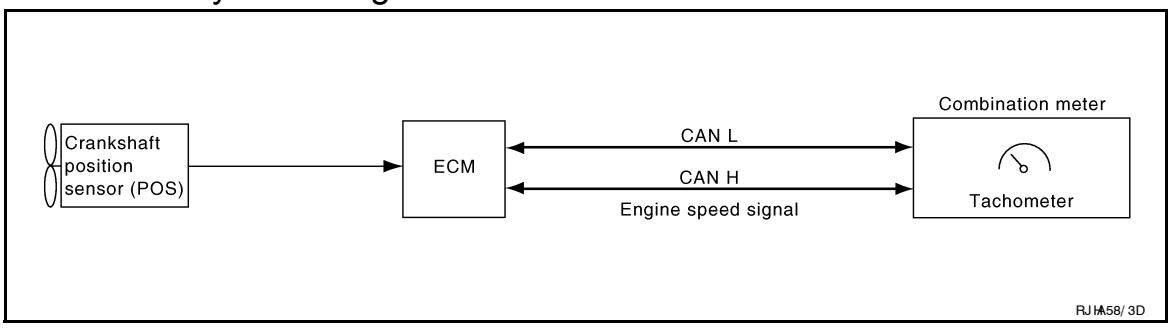

TACHOMETER : System Description

INFOID:0000000004095254

The tachometer indicates engine speed in revolutions per minute (rpm).
The ECM provides an engine speed signal to the combination meter via CAN communication lines.

TACHOMETER : Component Parts Location

INFOID:0000000004469747

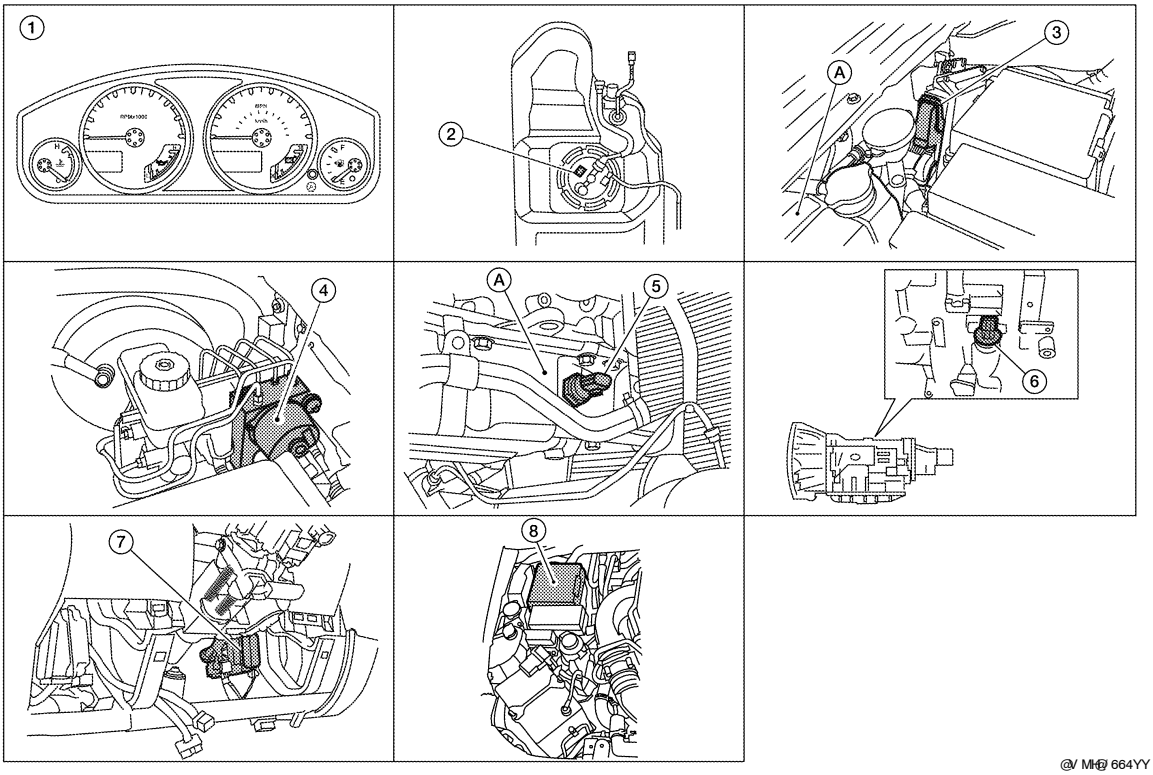

1. Combination meter M24
2. Fuel level sensor unit and fuel pump C5 (view with fuel tank removed)
3. ECM E16 (view with ECM cover removed)
   A. Coolant reservoir
4. ABS actuator and electric unit (control unit) E125
5. Oil pressure switch E208
   A. Oil pan (upper)
6. A/T assembly F9
7. BCM M18, M19 (view with lower instrument panel LH removed)
8. IPDM E/R E122, E124

TACHOMETER : Component Description

INFOID:0000000004095256

Unit	Description
Combination meter	Indicates the engine speed in RPM according to the engine speed signal received from ECM via CAN communication.
ECM	Transmits the engine speed signal to the combination meter with CAN communication line.

ENGINE COOLANT TEMPERATURE GAUGE

ENGINE COOLANT TEMPERATURE GAUGE : System Diagram

INFOID:0000000004095257

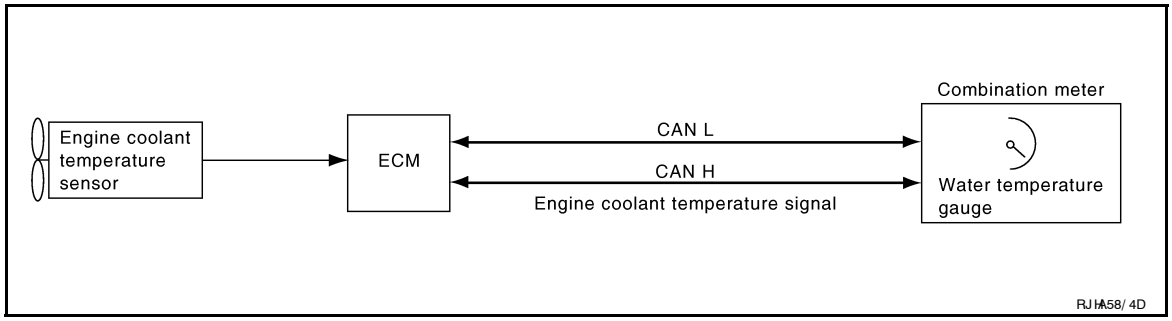

ENGINE COOLANT TEMPERATURE GAUGE : System Description

INFOID:0000000004095258

The engine coolant temperature gauge indicates the engine coolant temperature.
The ECM provides an engine coolant temperature signal to the combination meter via CAN communication lines.

ENGINE COOLANT TEMPERATURE GAUGE : Component Parts Location

INFOID:0000000004469748

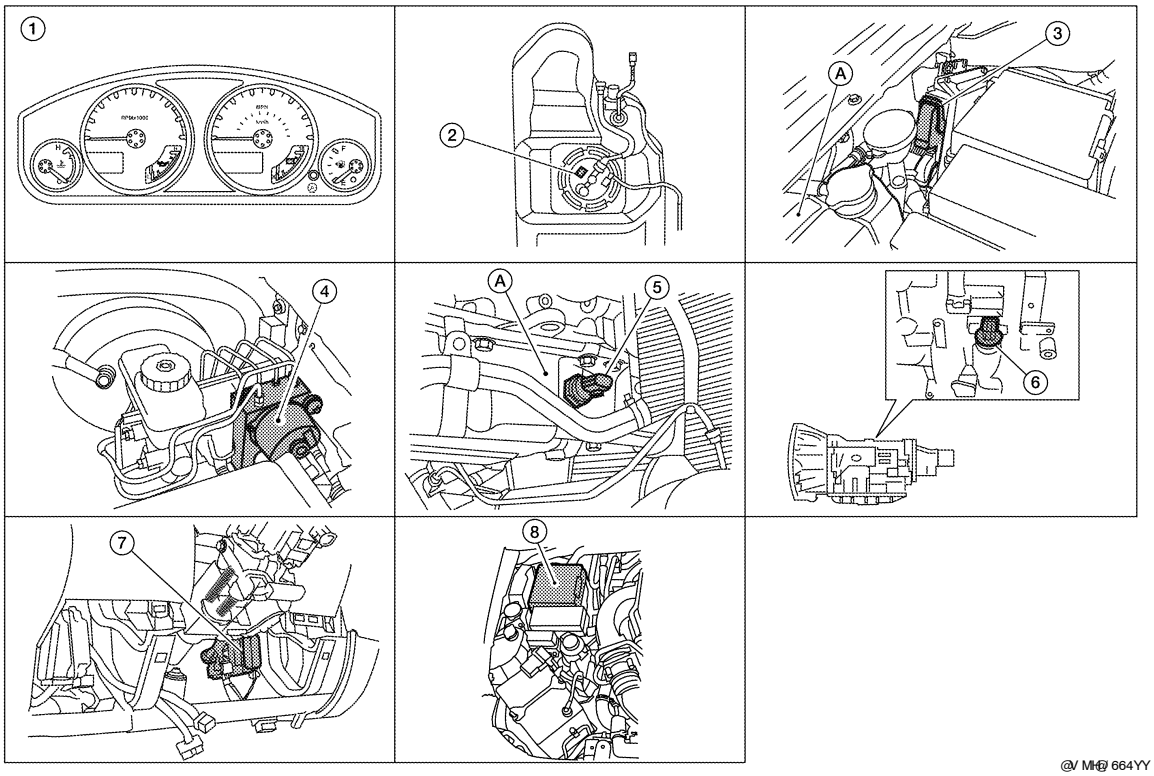

1. Combination meter M24
2. Fuel level sensor unit and fuel pump C5 (view with fuel tank removed)
3. ECM E16 (view with ECM cover removed)
   A. Coolant reservoir
4. ABS actuator and electric unit (control unit) E125
5. Oil pressure switch E208
   A. Oil pan (upper)
6. A/T assembly F9
7. BCM M18, M19 (view with lower instrument panel LH removed)
8. IPDM E/R E122, E124

ENGINE COOLANT TEMPERATURE GAUGE : Component Description

INFOID:0000000004095260

Unit	Description
Combination meter	Indicates the engine coolant temperature according to the engine coolant temperature signal received from ECM via CAN communication.
ECM	Transmits the engine coolant temperature signal to the combination meter via CAN communication.

FUEL GAUGE

FUEL GAUGE : System Diagram

INFOID:0000000004095261

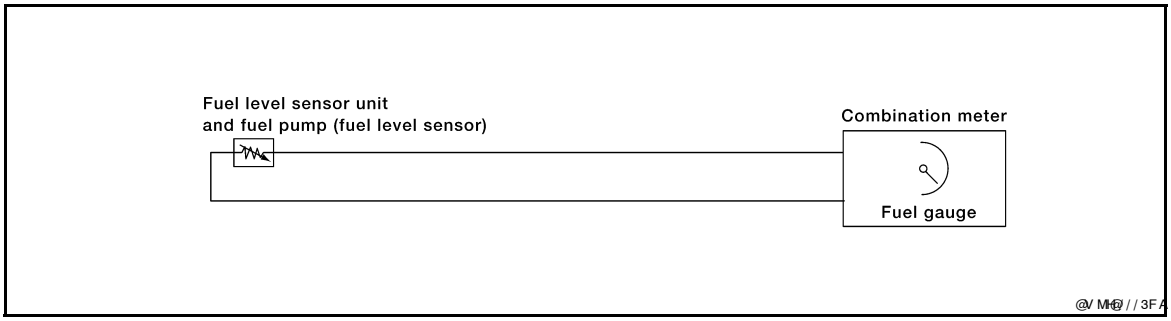

FUEL GAUGE : System Description

INFOID:0000000004095262

The fuel gauge indicates the approximate fuel level in the fuel tank.
The fuel gauge is regulated by the unified meter control unit and a variable resistor signal supplied by the fuel level sensor unit.

FUEL GAUGE : Component Parts Location

INFOID:0000000004469749

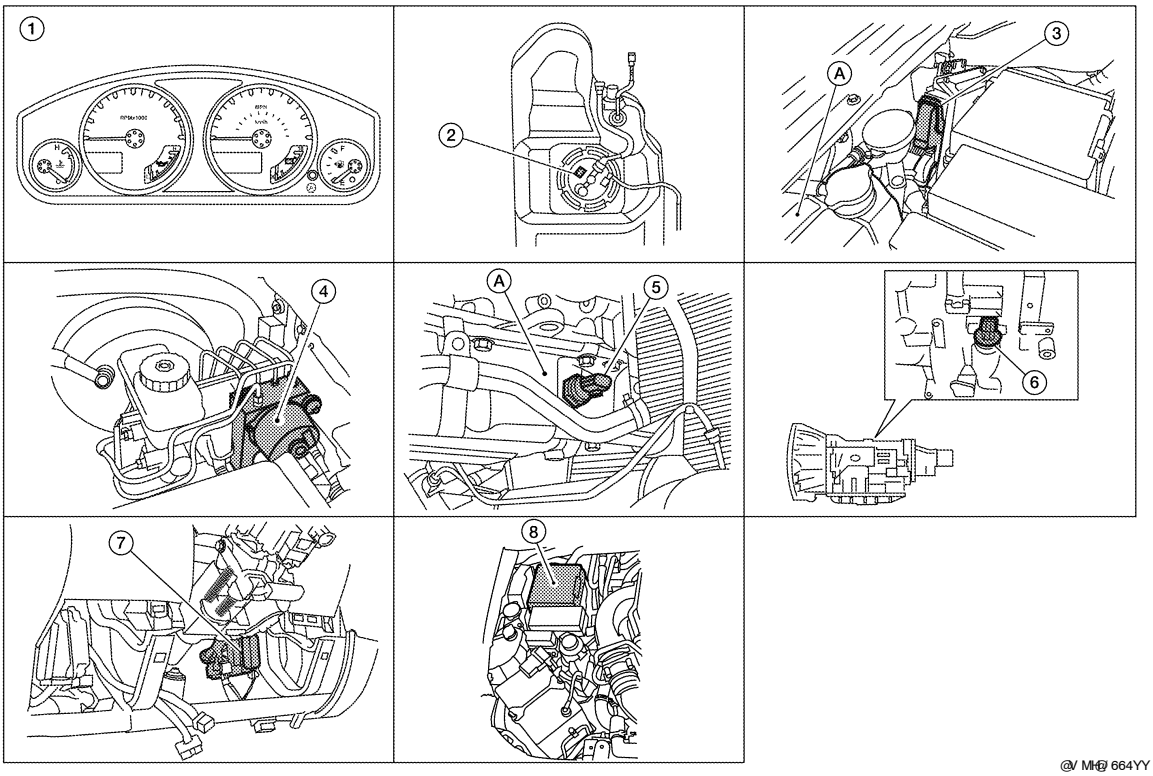

1. Combination meter M24
2. Fuel level sensor unit and fuel pump C5 (view with fuel tank removed)
3. ECM E16 (view with ECM cover removed)
   A. Coolant reservoir
4. ABS actuator and electric unit (control unit) E125
5. Oil pressure switch E208
   A. Oil pan (upper)
6. A/T assembly F9
7. BCM M18, M19 (view with lower instrument panel LH removed)
8. IPDM E/R E122, E124

FUEL GAUGE : Component Description

INFOID:0000000004095264

Unit	Description
Combination meter	Indicates the fuel level according to the fuel level sensor signal received from the fuel level sensor unit.
Fuel level sensor unit	Refer to MWI-32, "Description".

ENGINE OIL PRESSURE GAUGE

ENGINE OIL PRESSURE GAUGE : System Diagram

INFOID:0000000004095265

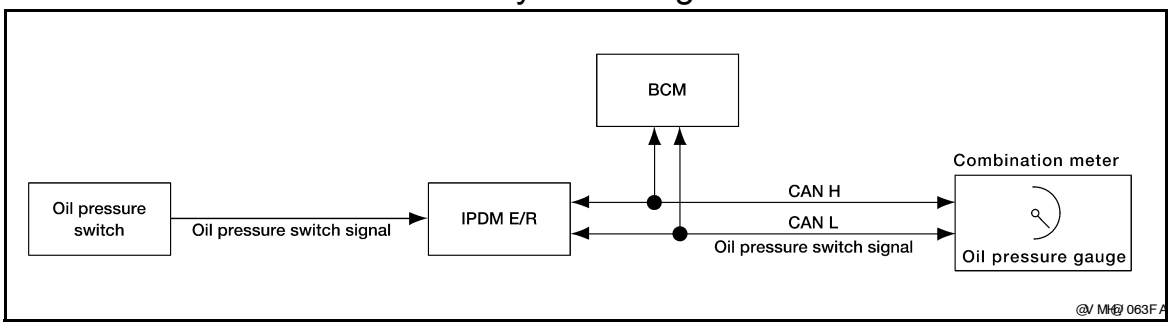

ENGINE OIL PRESSURE GAUGE : System Description

INFOID:0000000004095266

The engine oil pressure gauge indicates whether the engine oil pressure is low or normal.
The oil pressure gauge is controlled by the IPDM E/R. The IPDM E/R reads the ON/OFF signals from the oil pressure switch and transmits the oil pressure switch signal to the combination meter via BCM with the CAN communication line. The oil pressure gauge displays a low or normal indication according to the oil pressure switch signal received via CAN communication.

ENGINE OIL PRESSURE GAUGE : Component Parts Location

INFOID:0000000004469750

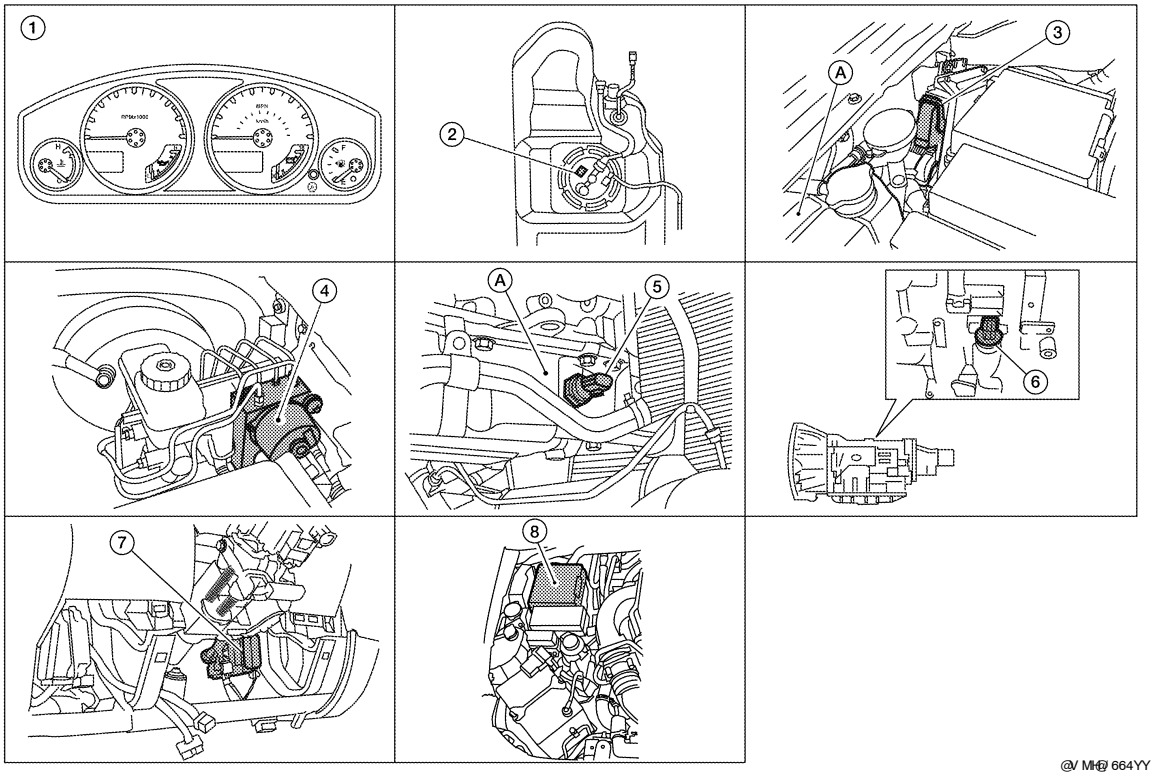

1. Combination meter M24
2. Fuel level sensor unit and fuel pump C5 (view with fuel tank removed)
3. ECM E16 (view with ECM cover removed)
   A. Coolant reservoir
4. ABS actuator and electric unit (control unit) E125
5. Oil pressure switch E208
   A. Oil pan (upper)
6. A/T assembly F9
7. BCM M18, M19 (view with lower instrument panel LH removed)
8. IPDM E/R E122, E124

ENGINE OIL PRESSURE GAUGE : Component Description

INFOID:0000000004095268

Unit	Description
Combination meter	Indicates the engine oil pressure (low/normal) according to the oil pressure switch signal received from BCM with CAN communication line.
IPDM E/R	Reads the ON/OFF signals from the oil pressure switch and transmits the oil pressure switch signal to the combination meter via BCM with the CAN communication line.
Oil pressure switch	Refer to MWI-34, "Description".
BCM	Transmits the oil pressure switch signal received from IPDM E/R via CAN communication to the combination meter via CAN communication.

VOLTAGE GAUGE

VOLTAGE GAUGE : System Diagram

INFOID:0000000004095269

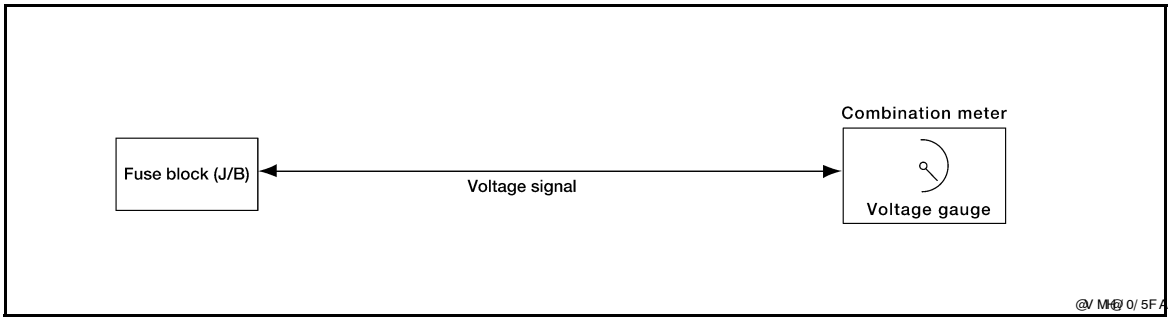

VOLTAGE GAUGE : System Description

INFOID:0000000004095270

The voltage gauge indicates the battery/charging system voltage.
The voltage gauge is regulated by the unified meter control unit.

VOLTAGE GAUGE : Component Parts Location

INFOID:0000000004469751

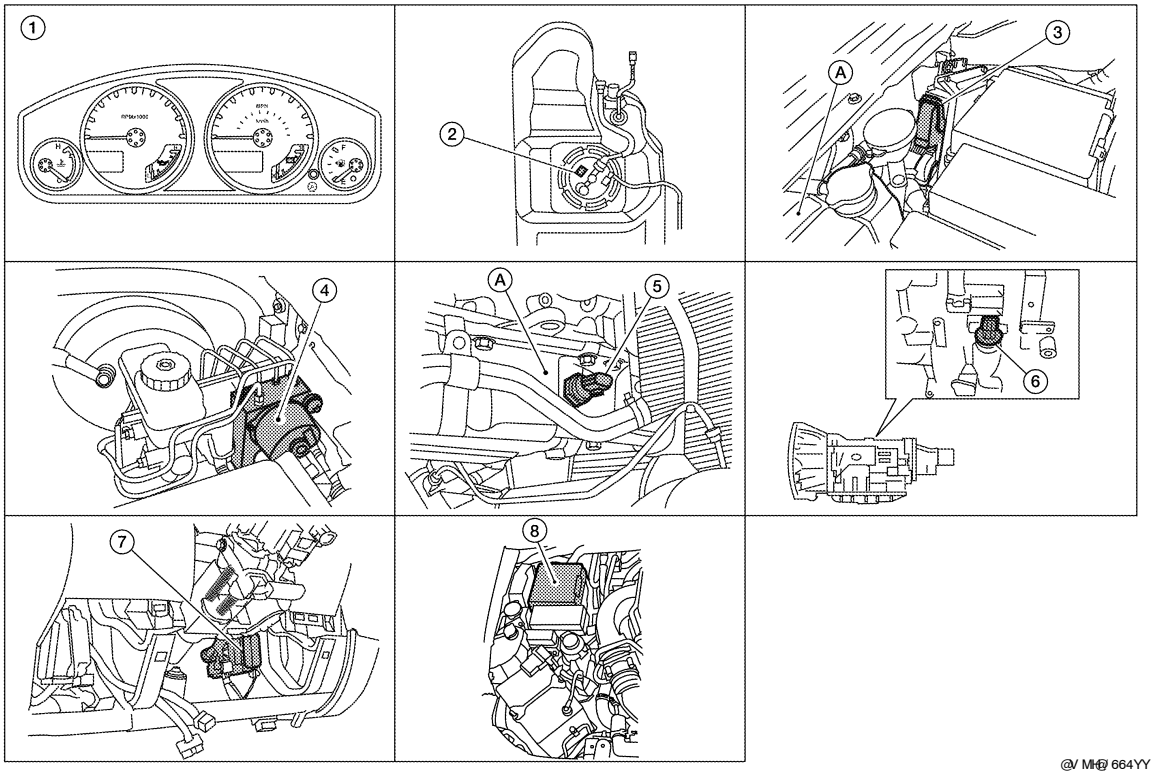

@V MH@ 664YY

1. Combination meter M24
2. Fuel level sensor unit and fuel pump C5 (view with fuel tank removed)
3. ECM E16 (view with ECM cover removed)
   A. Coolant reservoir
4. ABS actuator and electric unit (control unit) E125
5. Oil pressure switch E208
   A. Oil pan (upper)
6. A/T assembly F9
7. BCM M18, M19 (view with lower instrument panel LH removed)
8. IPDM E/R E122, E124

VOLTAGE GAUGE : Component Description

INFOID:0000000004095272

Unit	Description
Combination meter	Indicates the battery voltage according to the voltage signal received from the fuse block (J/B).
Fuse block (J/B)	Transmits the battery voltage signal to the combination meter.

ODO/TRIP METER

ODO/TRIP METER : System Diagram

INFOID:0000000004095273

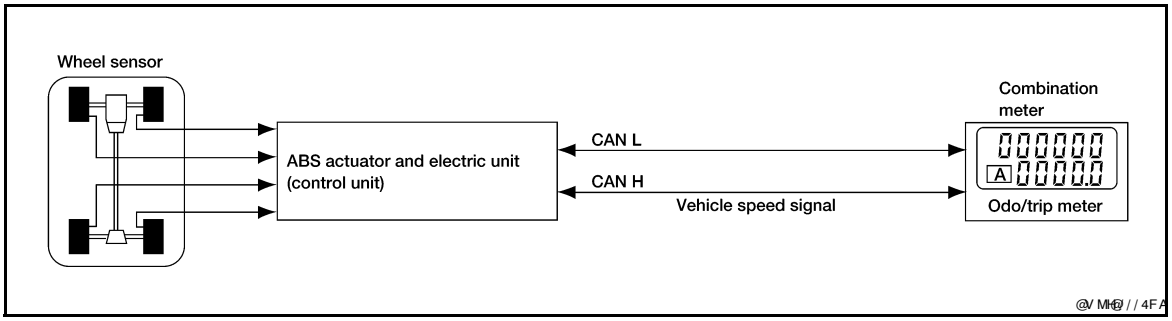

@V MH@ / / 4F A

ODO/TRIP METER : System Description

INFOID:0000000004095274

The vehicle speed signal and the memory signals from the meter memory circuit are processed by the combination meter and the mileage is displayed.

HOW TO CHANGE THE DISPLAY FOR ODO/TRIP METER

Refer to Owner's Manual for odo/trip meter operating instructions.

ODO/TRIP METER : Component Parts Location

INFOID:0000000004469752

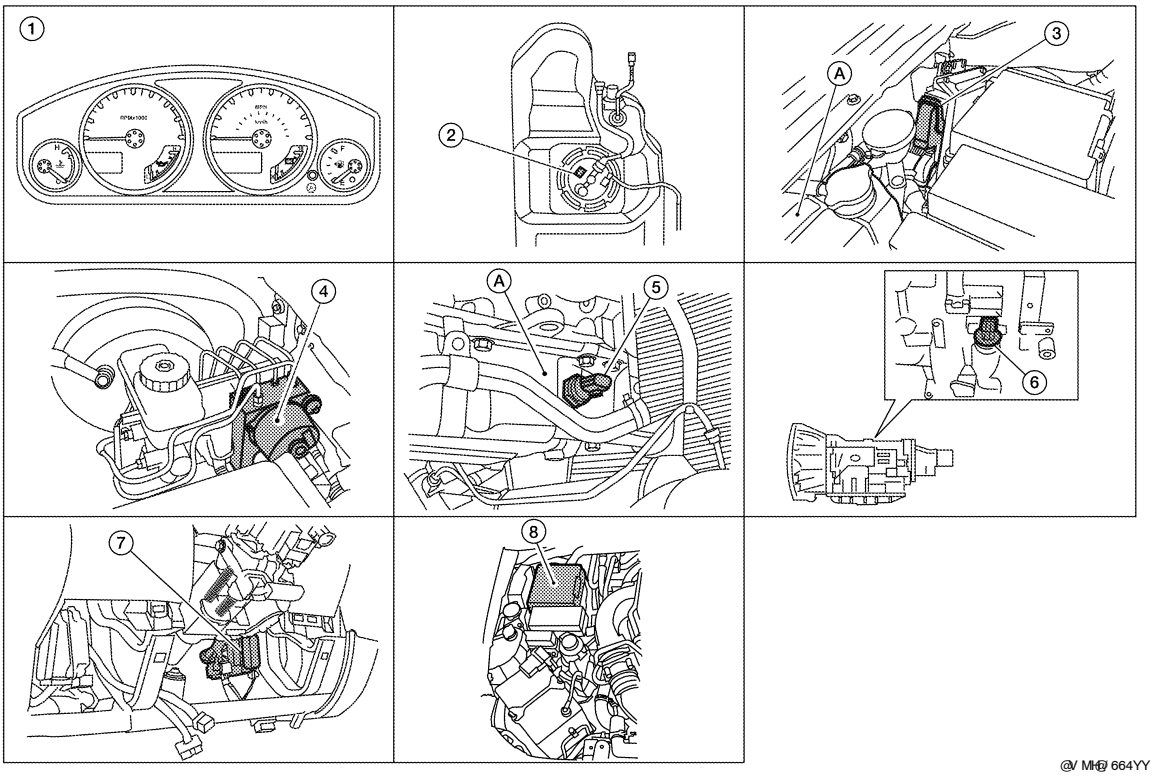

1. Combination meter M24
2. Fuel level sensor unit and fuel pump C5 (view with fuel tank removed)
3. ECM E16 (view with ECM cover removed)
   A. Coolant reservoir
4. ABS actuator and electric unit (control unit) E125
5. Oil pressure switch E208
   A. Oil pan (upper)
6. A/T assembly F9
7. BCM M18, M19 (view with lower instrument panel LH removed)
8. IPDM E/R E122, E124

ODO/TRIP METER : Component Description

INFOID:0000000004095276

Unit	Description
Combination meter	Converts the vehicle speed signal received from the ABS actuator and electric unit (control unit) via CAN communication to mileage, and it displays the accumulated mileage to the odo/trip meter.
ABS actuator and electric unit (control unit)	Transmits the vehicle speed signal to the combination meter via CAN communication.

SHIFT POSITION INDICATOR

SHIFT POSITION INDICATOR : System Diagram

INFOID:0000000004095277

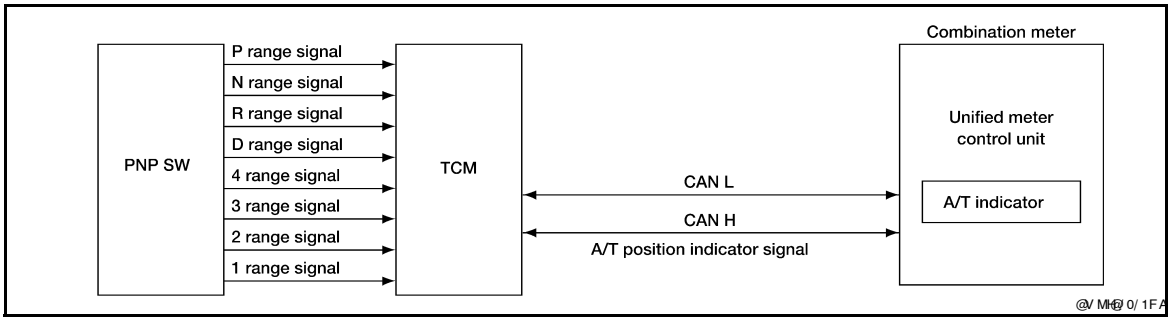

SHIFT POSITION INDICATOR : System Description

INFOID:0000000004095278

The TCM receives A/T indicator signals from the park/neutral position (PNP) switch. The TCM then sends A/T position indicator signals to the combination meter via CAN communication lines. The combination meter indicates the received shift position.

SHIFT POSITION INDICATOR : Component Parts Location

INFOID:0000000004469753

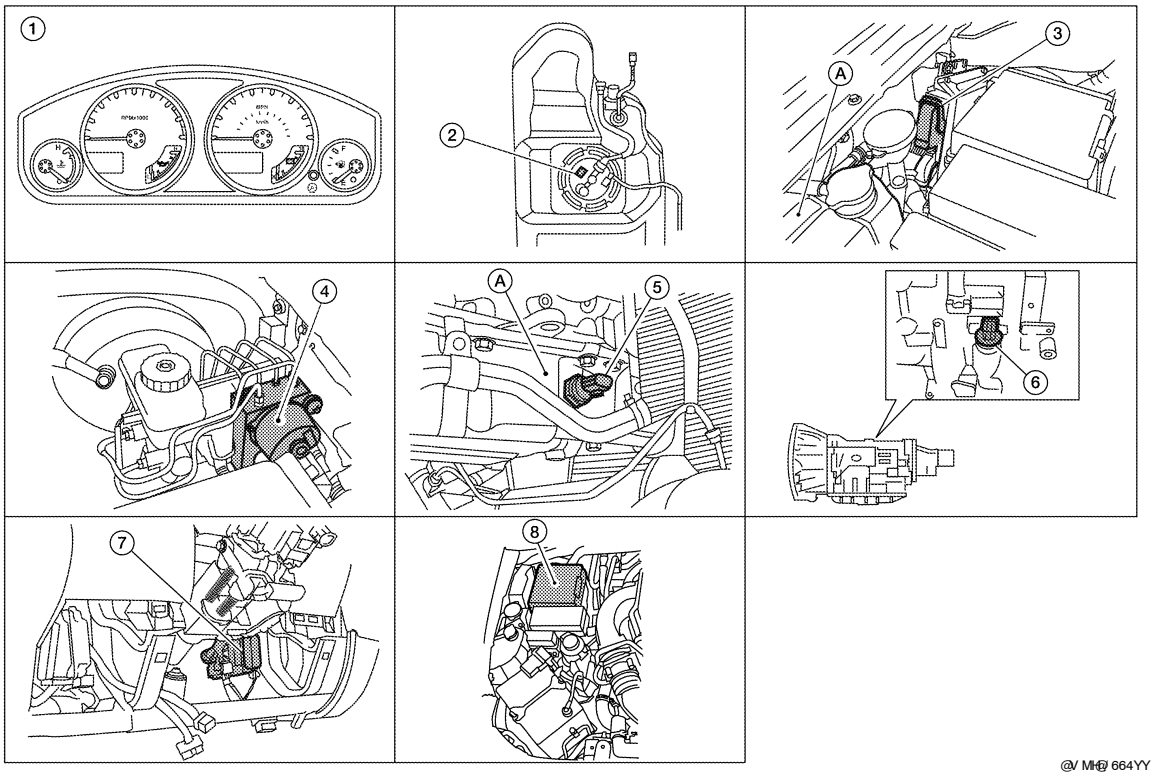

1. Combination meter M24
2. Fuel level sensor unit and fuel pump C5 (view with fuel tank removed)
3. ECM E16 (view with ECM cover removed)
   A. Coolant reservoir
4. ABS actuator and electric unit (control unit) E125
5. Oil pressure switch E208
   A. Oil pan (upper)
6. A/T assembly F9
7. BCM M18, M19 (view with lower instrument panel LH removed)
8. IPDM E/R E122, E124

SHIFT POSITION INDICATOR : Component Description

INFOID:0000000004095280

Unit	Description
Combination meter	Displays the shift position using shift position signal received from TCM.
TCM	Transmits the shift position signal to the combination meter via CAN communication.

WARNING LAMPS/INDICATOR LAMPS

WARNING LAMPS/INDICATOR LAMPS : System Diagram

INFOID:0000000004095281

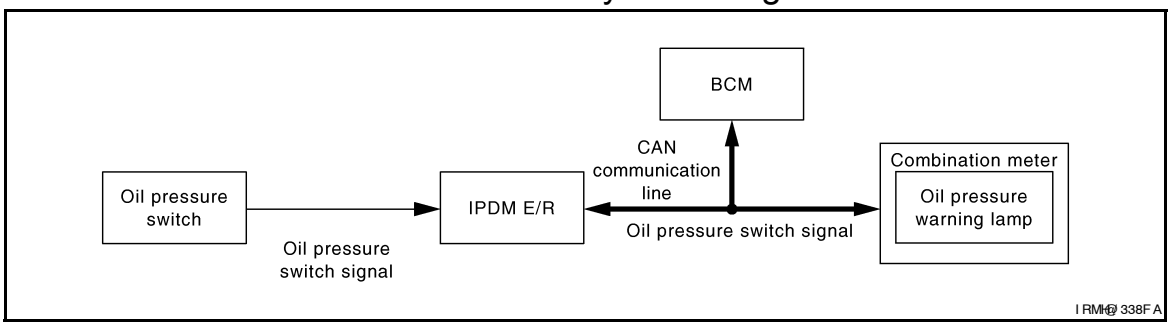

WARNING LAMPS/INDICATOR LAMPS : System Description

INFOID:0000000004095282

OIL PRESSURE WARNING LAMP

- IPDM E/R reads the ON/OFF signals from the oil pressure switch and transmits the oil pressure switch signal to the combination meter via BCM with the CAN communication line.
- The combination meter turns the oil pressure warning lamp ON/OFF according to the oil pressure switch signal received via CAN communication.

WARNING LAMPS/INDICATOR LAMPS : Component Parts Location

INFOID:0000000004469754

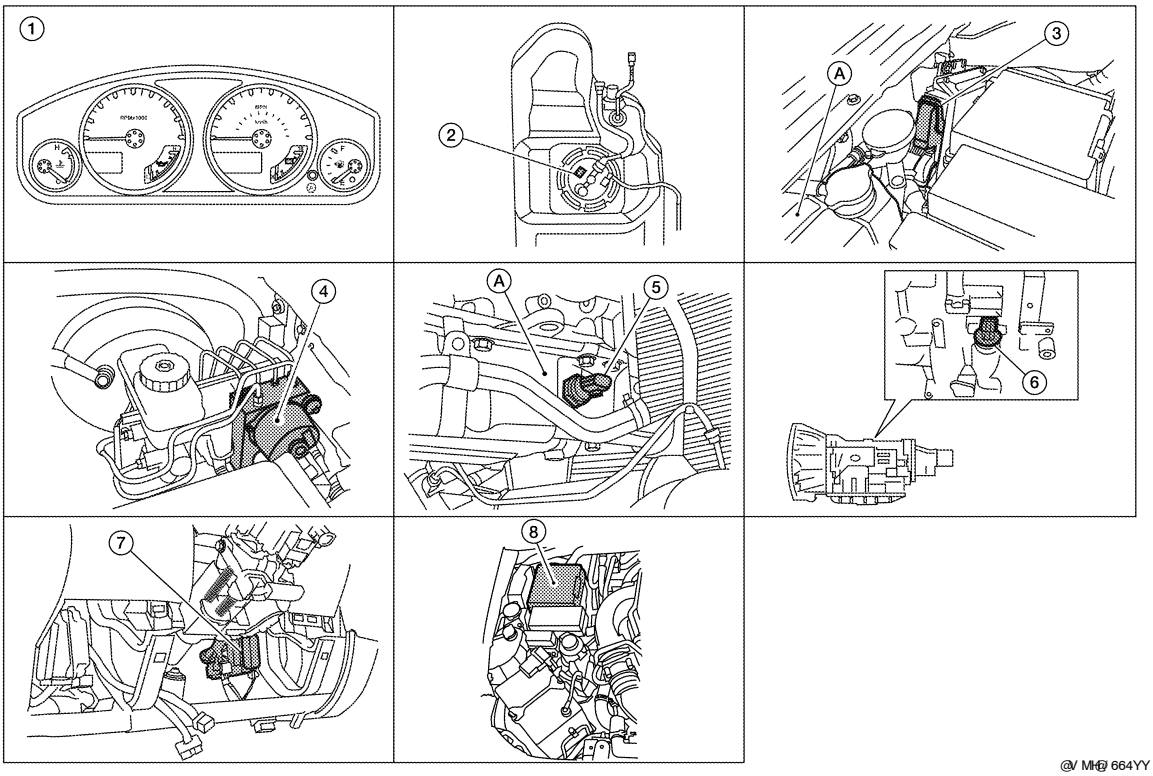

1. Combination meter M24
2. Fuel level sensor unit and fuel pump C5 (view with fuel tank removed)
3. ECM E16 (view with ECM cover removed)
   A. Coolant reservoir
4. ABS actuator and electric unit (control unit) E125
5. Oil pressure switch E208
   A. Oil pan (upper)
6. A/T assembly F9
7. BCM M18, M19 (view with lower instrument panel LH removed)
8. IPDM E/R E122, E124

WARNING LAMPS/INDICATOR LAMPS : Component Description

INFOID:0000000004095284

Unit	Description
Combination meter	Turns the oil pressure warning lamp ON/OFF according to the oil pressure switch signal received from BCM by means of communication.
IPDM E/R	Reads the ON/OFF signals from the oil pressure switch and transmits the oil pressure switch signal to the combination meter via BCM with the CAN communication line.
Oil pressure switch	Refer to MWI-34, "Description".
BCM	Transmits the oil pressure switch signal received from IPDM E/R via CAN communication to the combination meter via CAN communication.

TRIP COMPUTER

TRIP COMPUTER : System Diagram

INFOID:0000000004095285

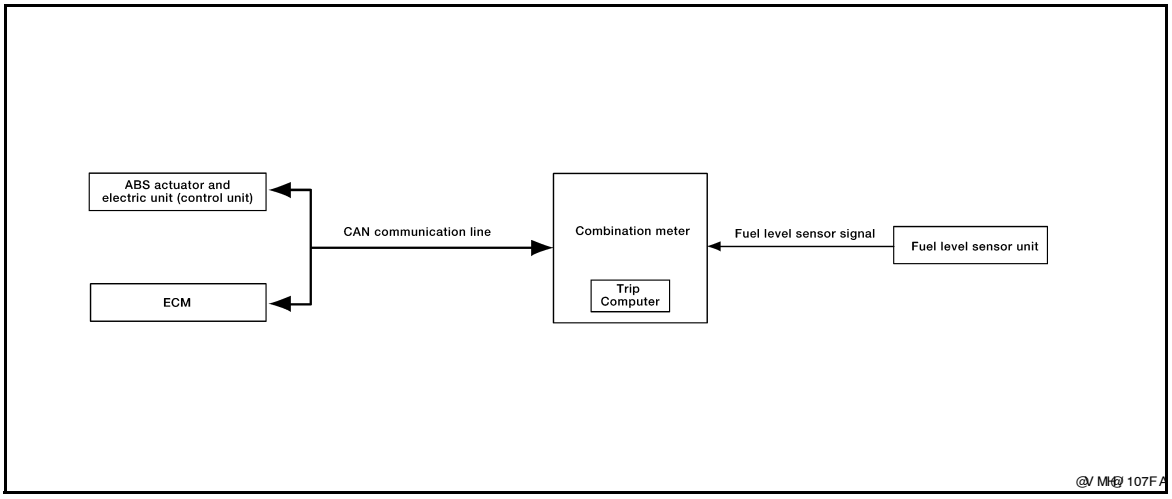

TRIP COMPUTER : System Description

INFOID:0000000004095286

FUNCTION

The trip computer can indicate the following items.

- DTE (distance to empty)
- Trip distance
- Trip time
- Average fuel consumption
- Average vehicle speed

DTE (DISTANCE TO EMPTY) INDICATION

The range indication provides the driver with an estimation of the distance that can be driven before refueling. The range is calculated by signals from the fuel level sensor unit (fuel remaining), ECM (fuel consumption) and the ABS actuator and electric unit (vehicle speed). The indication will be refreshed every 30 seconds. When fuel remaining is less than approximately 11.6 ℓ (3 1/8 US gal, 2 1/2 Imp gal), the indication will blink as a warning. If the fuel remaining is less than approximately 9.6 ℓ (2 1/2 US gal, 2 1/8 Imp gal), the indication will show “---”. In this case, the display will change to the DTE mode even though the display is showing a different mode. When the battery is disconnected and reconnected, DTE mode will display “---” until the vehicle is driven 0.3 miles (0.5 km).

TRIP DISTANCE

Trip distance is calculated by signal from the ABS actuator and electric unit (vehicle speed). If trip distance is reset, trip time will be reset at the same time.

TRIP TIME

Trip time displays cumulative ignition switch ON time. If trip time is reset, trip distance will be reset at the same time.

AVERAGE FUEL CONSUMPTION

Average fuel consumption indication is calculated by signals from the ABS actuator and electric unit (vehicle speed) and the ECM (fuel consumption). The indication will be refreshed every 30 seconds.

AVERAGE VEHICLE SPEED

Average vehicle speed indication is calculated by running distance and running time. The indication will be refreshed every 30 seconds. If average vehicle speed is reset, average fuel consumption will be reset at the same time. After resetting, the display will show "---" for 30 seconds.

HOW TO CHANGE/RESET INDICATION

Refer to Owner's Manual for trip computer operating instructions.

TRIP COMPUTER : Component Parts Location

INFOID:0000000004469755

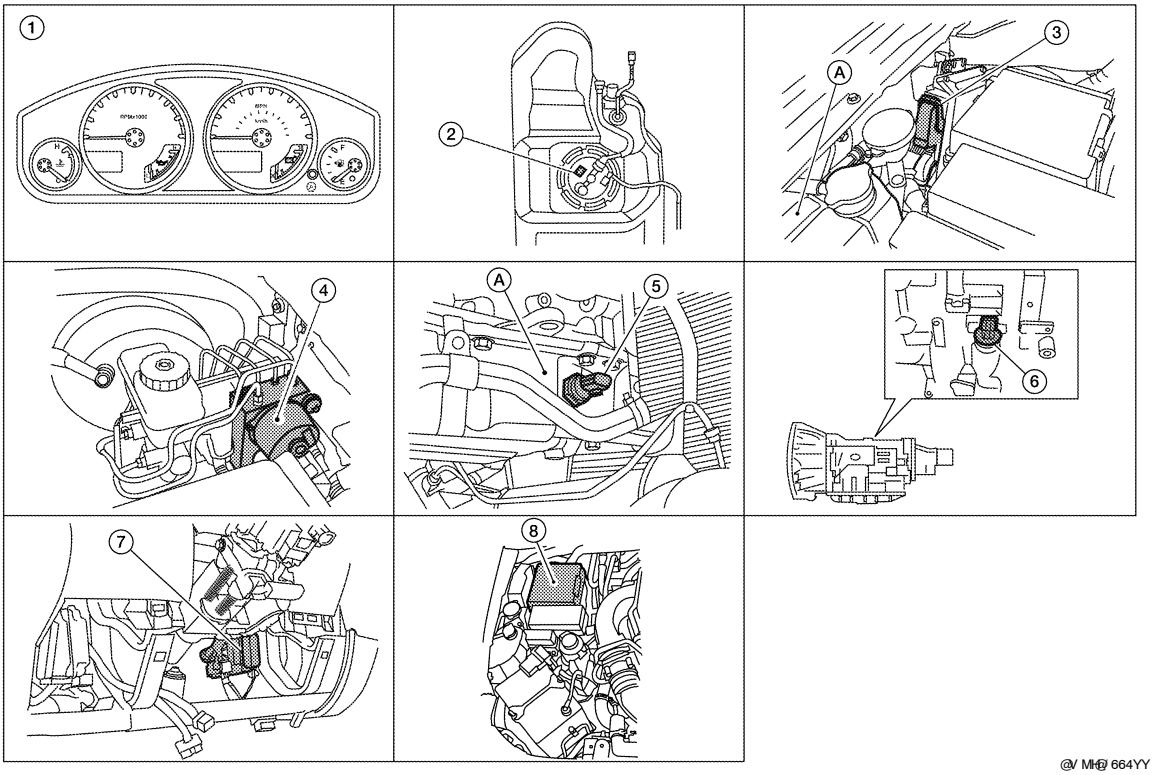

1. Combination meter M24
2. Fuel level sensor unit and fuel pump C5 (view with fuel tank removed)
3. ECM E16 (view with ECM cover removed)
   A. Coolant reservoir
4. ABS actuator and electric unit (control unit) E125
5. Oil pressure switch E208
   A. Oil pan (upper)
6. A/T assembly F9
7. BCM M18, M19 (view with lower instrument panel LH removed)
8. IPDM E/R E122, E124

TRIP COMPUTER : Component Description

INFOID:0000000004095288

Unit	Description
Combination meter	Controls the information display according to the signal received from each unit.
Fuel level sensor unit	Refer to MWI-32, "Description".
ECM	Transmits the following signals to the combination meter via CAN communication line. • Engine speed signal • Fuel consumption monitor signal
ABS actuator and electric unit (control unit)	Transmits the vehicle speed signal to the combination meter via CAN communication line.

COMPASS

Description

INFOID:0000000004095289

DESCRIPTION

With the ignition switch in the ON position, and the mode switch ON, the compass display will indicate the direction the vehicle is heading. Vehicle direction is displayed as follows:

- N: north
- E: east
- S: south
- W: west

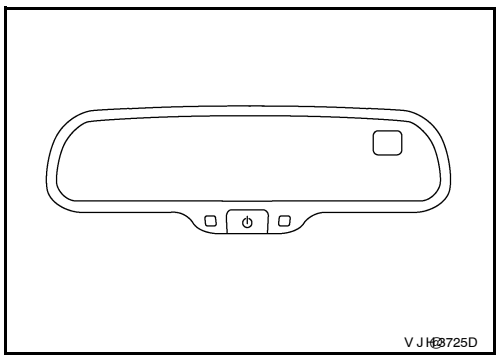

ZONE VARIATION SETTING PROCEDURE

The difference between magnetic north and geographical north can sometimes be great enough to cause false compass readings. This difference is known as variance. In order for the compass to operate properly (accurately) in a particular zone, the zone variation must be calibrated using the following procedure.

Zone Variation Chart

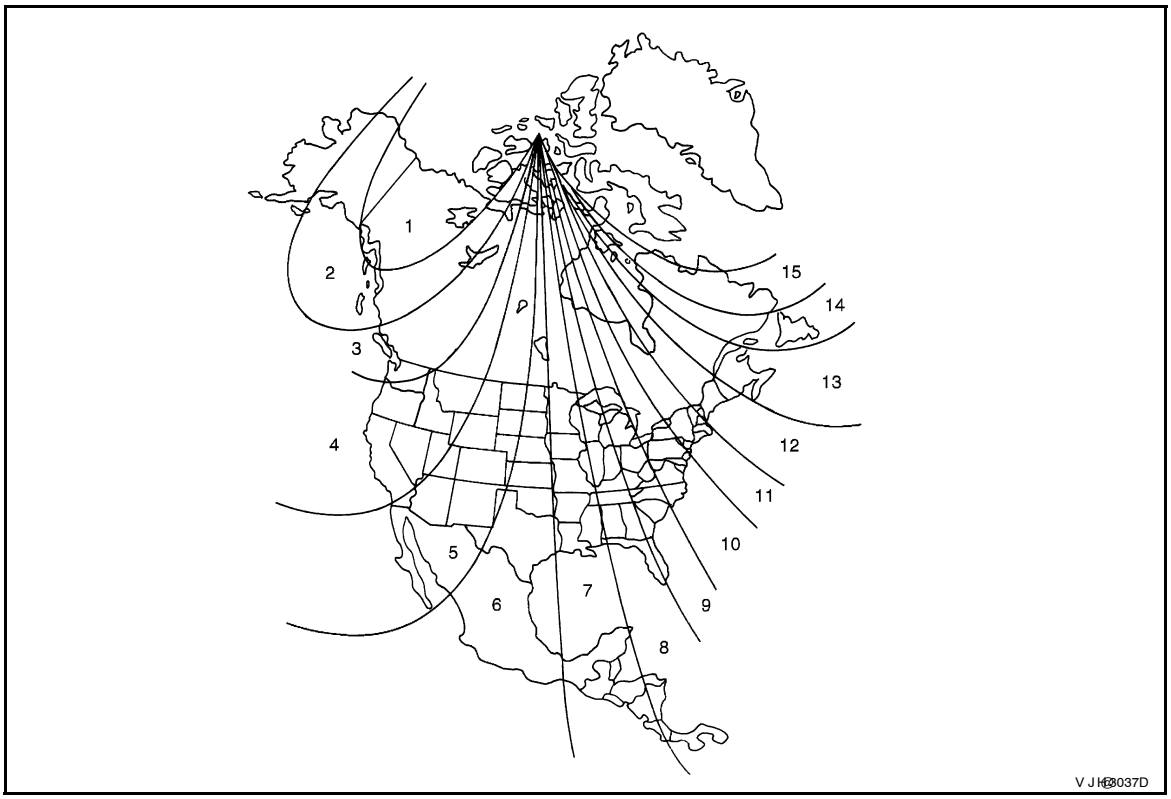

1. Determine your location on the zone map.
2. Turn the ignition switch to the ON position.
3. Press and hold the mode switch for about 5 seconds. The current zone number will appear in the display.
4. Press the mode switch repeatedly until the desired zone number appears in the display.

Once the desired zone number is displayed, stop pressing the mode switch and the display will show a compass direction after a few seconds.

NOTE:

Use zone number 5 for Hawaii.

CALIBRATION PROCEDURE

The compass display is equipped with an automatic correction function. If the compass display reads “CAL” or the direction is not shown correctly, perform the correction procedure below.

1. Press and hold the mode switch for about 13 seconds. The display will read “CAL”.
2. Drive the vehicle slowly in a circle, in an open, safe place. The initial calibration is completed in about 3 turns.

NOTE:
In places where the terrestrial magnetism is extremely disturbed, the initial correction may start automatically.

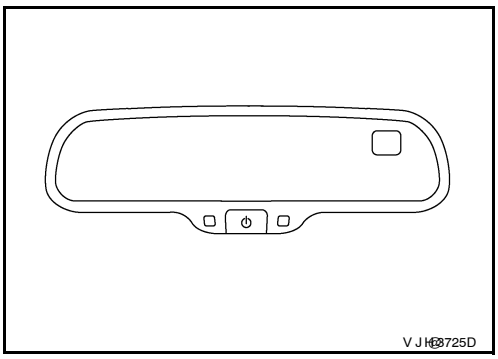

DIAGNOSIS SYSTEM (METER)

Diagnosis Description

INFOID:0000000004095290

SELF-DIAGNOSIS MODE

The following items can be checked during Combination Meter Self-Diagnosis Mode.
- Gauge sweep and present gauge values.
- Illuminates all odometer/trip meters and A/T indicator segments.
- Illuminates all micro controlled lamps/LEDs regardless of switch position.
- Displays estimated present battery voltage.
- Displays seat belt buckle switch LH status.

OPERATION PROCEDURE

NOTE:
- Once entered, combination meter self-diagnosis mode will function with the ignition switch in ON or START. Combination meter self-diagnosis mode will exit upon turning the ignition switch to OFF or ACC.
- If the diagnosis function is activated with trip A displayed, the mileage on trip A is reset to 0000.0. (Trip B operates the same way.)

To initiate combination meter self-diagnosis mode, refer to the following procedure.

1. Turn the ignition switch ON, while pressing the odometer/trip meter switch for 5 - 8 seconds. When the diagnosis function is activated, the odometer/trip meter will display tESt.

NOTE:
Check combination meter power supply and ground circuit when self-diagnosis mode of combination meter does not start. Refer to MWI-29, "COMBINATION METER : Diagnosis Procedure". Replace combination meter if normal. Refer to MWI-90, "Removal and Installation".

COMBINATION METER SELF-DIAGNOSIS MODE FUNCTIONS

To interpret combination meter self-diagnosis mode functions, refer to the following table.

Event	Odometer Display	Description of Test/Data	Notes:
Odometer/trip meter A/B switch held from 5 to 8 seconds (or until released)	tESt		Initiating self-diagnosis mode
Switch released	GAGE	Performs sweep of all gauges, then displays present gauge values.	Gauges sweep within 10 seconds
Switch pressed	(All segments illuminated)	Lights all LCD segments. Compare with picture.	USA 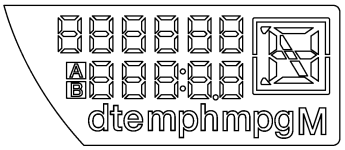 @V MHP 108YY Canada 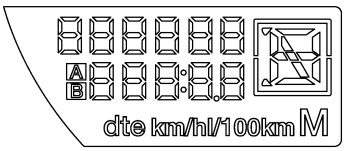 @V MHP 11/ YY
Switch pressed	bulb	Illuminates all micro-controlled lamps/LEDs.	Part may not be configured for all lamps (functions) that turn on during test. This is normal.
Switch pressed	r XXXX, FAIL	Return to normal operation of all lamps/LEDs and displays “r XXXX”.	If a malfunction exists, “FAIL” will flash.

Event	Odometer Display	Description of Test/Data	Notes:
Switch pressed	nrXXXX	Displays Hex ROM rev as stored in NVM.	
Switch pressed	EE XX, FAIL	Displays “EE XX”.	If a malfunction exists, “FAIL” will flash.
Switch pressed	dtXXXX	Hex coding of final manufacturing test date.	
Switch pressed (3 times)	Sc1 XX through Epr XX	Displays 8 bit software configuration value in Hex format	
Switch pressed	1nF XX	Displays 8-bit market info value in Hex format.	$31 = USA $2A = Canada
Switch pressed (3 times)	cYL XX through tF	N/A	
Switch pressed	ot1 XX	Displays oil pressure telltale “” in Hex format.	
Switch pressed	ot0 XX	Displays oil pressure telltale “” in Hex format.	
Switch pressed	XXXXX	“Corrected” speed value in hundredths of MPH. Gauge indication may be slightly higher. This is normal.	Will display “-----” if message is not received. Will display “99999” if data received is invalid.
Switch pressed	XXXXX	“Corrected” speed value in hundredths of KPH. Gauge indication may be slightly different. This is normal.	Will display “-----” if message is not received. Will display “99999” if data received is invalid.
Switch pressed	t XXXX	Tachometer value in RPM. Gauge indication may be higher at higher RPM. This is normal.	Will display “-----” if message is not received.
Switch pressed	F1XXXX	Present fuel level A/D input. This input represents fuel sender input.	000-009 = Short circuit 010-254 = Normal range 255 = Open circuit
Switch pressed	XXXC	Last temperature gauge input value in degrees C. Temperature gauge indicates present temperature per indication standard.	Will display “---”C if message is not received. Will display “999” if data received is invalid. High = 130 deg C Normal = 70 - 105 deg C Low = less than 50 deg C
Switch pressed	BAtXX.X	Estimated present battery voltage.	
Switch pressed	rES -X	Seat belt buckle switch LH status.	1= Buckled 0 = Unbuckled
Switch pressed (30 times)	PA -XX through PA1-XX	N/A	
Switch pressed	GAGE		Return to beginning of self-diagnosis cycle.

CONSULT-III Function (METER/M&A)

INFOID:0000000004095291

CONSULT-III can display each diagnostic item using the diagnostic test modes shown following.

METER/M&A diagnosis mode	Description
SELF-DIAG RESULTS	Displays combination meter self-diagnosis results.
DATA MONITOR	Displays combination meter input/output data in real time.
CAN DIAG SUPPORT MNTR	The result of transmit/receive diagnosis of CAN communication can be read.

SELF-DIAG RESULTS

Display Item List
Refer to MWI-56, "DTC Index".

DATA MONITOR

Display Item List

X: Applicable

Display item [Unit]	MAIN SIGNALS	SELECTION FROM MENU	Description
SPEED METER [km/h] or [mph]	X	X	Displays the value of vehicle speed signal.
SPEED OUTPUT [km/h] or [mph]	X	X	Displays the value of vehicle speed signal, which is transmitted to each unit with CAN communication.
TACHO METER [rpm]	X	X	Displays the value of engine speed signal, which is input from ECM.
FUEL METER [lit.]	X	X	Displays the value, which processes a resistance signal from fuel gauge.
W TEMP METER [°C] or [°F]	X	X	Displays the value of engine coolant temperature signal, which is input from ECM.
ABS W/L [ON/OFF]		X	Displays [ON/OFF] condition of ABS warning lamp.
VDC/TCS IND [ON/OFF]		X	Displays [ON/OFF] condition of VDC OFF indicator lamp.
SLIP IND [ON/OFF]		X	Displays [ON/OFF] condition of SLIP indicator lamp.
BRAKE W/L [ON/OFF]		X	Displays [ON/OFF] condition of brake warning lamp.*
DOOR W/L [ON/OFF]		X	Displays [ON/OFF] condition of door warning lamp.
HI-BEAM IND [ON/OFF]		X	Displays [ON/OFF] condition of high beam indicator.
TURN IND [ON/OFF]		X	Displays [ON/OFF] condition of turn indicator.
OIL W/L [ON/OFF]		X	Displays [ON/OFF] condition of oil pressure warning lamp.
C-ENG W/L [ON/OFF]		X	Displays [ON/OFF] condition of malfunction indicator lamp.
CRUISE IND [ON/OFF]		X	Displays [ON/OFF] condition of CRUISE indicator.
SET IND [ON/OFF]		X	Displays [ON/OFF] condition of SET indicator.
O/D OFF W/L [ON/OFF]		X	Displays [ON/OFF] condition of O/D OFF warning lamp.
FUEL W/L [ON/OFF]	X	X	Displays [ON/OFF] condition of low-fuel warning lamp.
AIR PRES W/L [ON/OFF]		X	Displays [ON/OFF] condition of tire pressure warning lamp.
KEY G/Y W/L [ON/OFF]		X	This item is not used for this model. “OFF” is always displayed.
KEY R W/L [ON/OFF]		X	
KEY KNOB W/L [ON/OFF]		X	
M RANGE SW [ON/OFF]	X	X	
NM RANGE SW [ON/OFF]	X	X	
AT SFT UP SW [ON/OFF]	X	X	
AT SFT DWN SW [ON/OFF]	X	X	
DISTANCE [km] or [mile]	X	X	Displays the value, which is calculated by vehicle speed signal, fuel gauge and fuel consumption from ECM.
BUZZER [ON/OFF]	X	X	Displays [ON/OFF] condition of buzzer.
BRAKE SW [ON/OFF]		X	Indicates [ON/OFF] condition of parking brake switch.
AT-M IND [ON/OFF]	X	X	This item is not used for this model. “OFF” is always displayed.

Display item [Unit]	MAIN SIGNALS	SELECTION FROM MENU	Description
AT-M GEAR [1, 2, 3, 4, 5]	X	X	This item is not used for this model. “1” is always displayed.
P RANGE IND [ON/OFF]	X	X	Indicates [ON/OFF] condition of A/T shift P range indicator.
R RANGE IND [ON/OFF]	X	X	Indicates [ON/OFF] condition of A/T shift R range indicator.
N RANGE IND [ON/OFF]	X	X	Indicates [ON/OFF] condition of A/T shift N range indicator.
D RANGE IND [ON/OFF]	X	X	Indicates [ON/OFF] condition of A/T shift D range indicator.
4 RANGE IND [ON/OFF]	X	X	Indicates [ON/OFF] condition of A/T shift 4 range indicator.
3 RANGE IND [ON/OFF]	X	X	Indicates [ON/OFF] condition of A/T shift 3 range indicator.
2 RANGE IND [ON/OFF]	X	X	Indicates [ON/OFF] condition of A/T shift 2 range indicator.
1 RANGE IND [ON/OFF]	X	X	Indicates [ON/OFF] condition of A/T shift 1range indicator.
4WD LOCK SW [ON/OFF]		X	Indicates [ON/OFF] condition of 4WD lock switch.
4WD LOCK IND [ON/OFF]		X	Indicates [ON/OFF] condition of 4WD lock indicator.
SEAT BELT W/L [ON/OFF]		X	Indicates [ON/OFF] condition of seat belt warning lamp.
O/D OFF SWITCH [ON/OFF]		X	Indicates [ON/OFF] condition of O/D OFF switch.
FR FOG IND [ON/OFF]		X	This item is not used for this model. “OFF” is always displayed.
RR FOG IND [ON/OFF]		X	

NOTE:

Some items are not available due to vehicle specification.

*: The monitor will indicate “OFF” even though the brake warning lamp is on if either of the following conditions exist.

- The parking brake is engaged
- The brake fluid level is low

COMPONENT DIAGNOSIS

DTC U1000 CAN COMMUNICATION

DTC Logic

INFOID:0000000004095292

DTC DETECTION LOGIC

DTC	CONSULT-III display	Detection condition
U1000	CAN COMM CIRC [U1000]	When combination meter is not receiving CAN communication signals for 2 seconds or more.

Diagnosis Procedure

INFOID:0000000004095293

Symptom: Displays “CAN COMM CIRC [U1000]” as a self-diagnosis result of combination meter.

1.CHECK CAN COMMUNICATION

Select “SELF-DIAG RESULTS” mode for “METER/M&A” with CONSULT-III.

>> Go to “LAN system”. Refer to LAN-14, "Trouble Diagnosis Flow Chart".

DTC B2205 VEHICLE SPEED CIRCUIT

Description

INFOID:0000000004095294

The ABS actuator and electric unit (control unit) provides a vehicle speed signal to the combination meter via CAN communication lines.

DTC Logic

INFOID:0000000004095295

DTC	CONSULT-III display	Detection condition
B2205	VEHICLE SPEED CIRC [B2205]	Malfunction is detected when an erroneous speed signal is received for 2 seconds or more.

Diagnosis Procedure

INFOID:0000000004095296

Symptom: Displays “VEHICLE SPEED CIRC [B2205]” as a self-diagnosis result of combination meter.

1.CHECK COMBINATION METER INPUT SIGNAL

1. Start engine and select “METER/M&A” on CONSULT-III.
2. Using “SPEED METER” on “DATA MONITOR”, compare the value of DATA MONITOR with speedometer pointer of combination meter. Speedometer and DATA MONITOR indications should be close.

Is the inspection result normal?

YES >> Perform ABS actuator and electric unit (control unit) self-diagnosis. Refer to BRC-23, "CONSULT-III Function (ABS)" (TYPE 1) or BRC-126, "CONSULT-III Function (ABS)" (TYPE 2).

NO >> Replace combination meter. Refer to MWI-90, "Removal and Installation".

POWER SUPPLY AND GROUND CIRCUIT
COMBINATION METER

COMBINATION METER : Diagnosis Procedure

INFOID:0000000004095297

1.CHECK FUSES

Check for blown combination meter fuses.

Unit	Power source	Fuse No.
Combination meter	Battery	19
	Ignition switch ON or START	14

Is the inspection result normal?

YES >> GO TO 2
NO >> If fuse is blown, be sure to eliminate cause of malfunction before installing new fuse.

2.POWER SUPPLY CIRCUIT CHECK

1. Disconnect combination meter connector M24.
2. Check voltage between combination meter harness connector M24 terminals 3, 16 and ground.

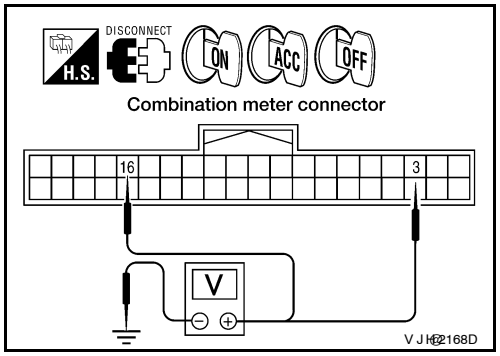

Terminals			Ignition switch position		
(+)		(–)	OFF	ACC	ON
Connector	Terminal				
M24	3	Ground	Battery voltage	Battery voltage	Battery voltage
	16		0V	0V	Battery voltage

Is the inspection result normal?

YES >> GO TO 3
NO >> Check harness for open between combination meter and fuse.

3.GROUND CIRCUIT CHECK

1. Turn ignition switch OFF.
2. Check continuity between combination meter harness connector M24 terminals 13, 23 and ground.

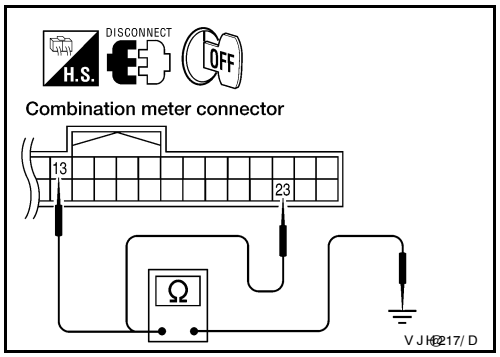

Terminals			Continuity
(+)		(–)	
Connector	Terminal		
M24	13	Ground	Yes
	23		

Is the inspection result normal?

YES >> Inspection End.
NO >> Check ground harness.

BCM (BODY CONTROL MODULE)

BCM (BODY CONTROL MODULE) : Diagnosis Procedure

INFOID:0000000004471346

1. CHECK FUSES AND FUSIBLE LINK

Check that the following fuses and fusible link are not blown.

Terminal No.	Signal name	Fuses and fusible link No.
57	Battery power supply	18 (10A)
70		G (50A)
11	Ignition ACC or ON	4 (10A)
38	Ignition ON or START	1 (10A)

Is the fuse blown?

YES >> Replace the blown fuse or fusible link after repairing the affected circuit.
NO >> GO TO 2

2. CHECK POWER SUPPLY CIRCUIT

1. Turn ignition switch OFF.
2. Disconnect BCM.
3. Check voltage between BCM harness connector and ground.

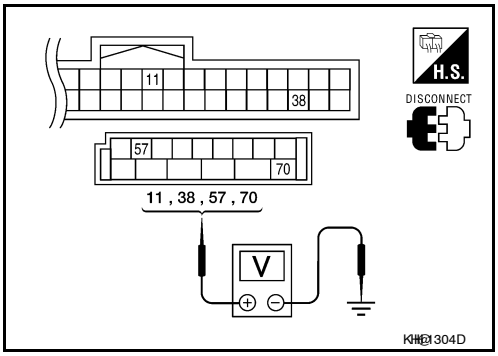

Connector	Terminals (+)	Terminals (-)	Power source	Condition	Voltage (V) (Approx.)
M18	11	Ground	ACC power supply	Ignition switch ACC or ON	Battery voltage
	38	Ground	Ignition power supply	Ignition switch ON or START	Battery voltage
M20	57	Ground	Battery power supply	Ignition switch OFF	Battery voltage
	70	Ground	Battery power supply	Ignition switch OFF	Battery voltage

Is the measurement value normal?

YES >> GO TO 3
NO >> Repair or replace harness.

3. CHECK GROUND CIRCUIT

Check continuity between BCM harness connector and ground.

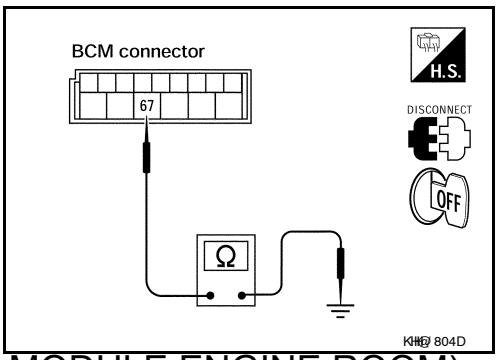

BCM		Ground	Continuity
Connector	Terminal		
M20	67		Yes

Does continuity exist?

YES >> Inspection End.
NO >> Repair or replace harness.

IPDM E/R (INTELLIGENT POWER DISTRIBUTION MODULE ENGINE ROOM)

IPDM E/R (INTELLIGENT POWER DISTRIBUTION MODULE ENGINE ROOM) : Diagnosis Procedure

INFOID:0000000004471347

1. CHECK FUSIBLE LINKS

Check that the following IPDM E/R fusible links are not blown.

Terminal No.	Signal name	Fusible link No.
1	Battery	A, D
2		C
22		I

Is the fusible link blown?

YES >> Replace the blown fusible link after repairing the affected circuit.
NO >> GO TO 2

2. CHECK BATTERY POWER SUPPLY CIRCUIT

1. Turn ignition switch OFF.
2. Disconnect IPDM E/R.
3. Check voltage between IPDM E/R harness connectors and ground.

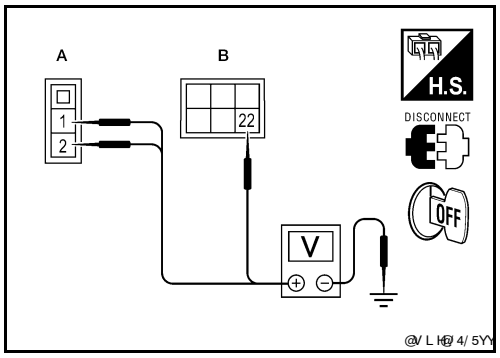

Terminals			Ignition switch position	Voltage (V) (Approx.)
(+)		(–)		
Connector	Terminal			
E118 (A)	1	Ground	OFF	Battery voltage
	2			
E120 (B)	22			

Is there voltage on all pins?

YES >> GO TO 3
NO >> Repair or replace harness.

3. CHECK GROUND CIRCUIT

1. Turn ignition switch OFF.
2. Check continuity between IPDM E/R harness connectors and ground.

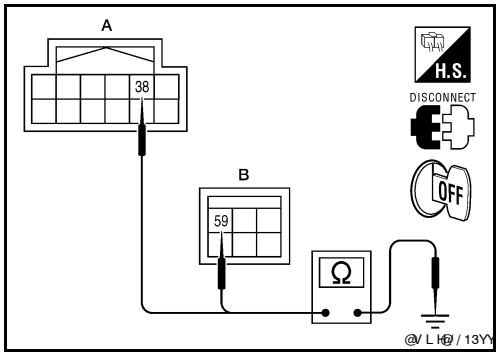

IPDM E/R		Ground	Continuity
Connector	Terminal		
E122 (A)	38		Yes
E124 (B)	59		

Does continuity exist?

YES >> Inspection End.
NO >> Repair or replace harness.

FUEL LEVEL SENSOR SIGNAL CIRCUIT

Description

INFOID:0000000004095300

The fuel level sensor unit and fuel pump detects the approximate fuel level in the fuel tank and transmits the fuel level signal to the combination meter.

Component Function Check

INFOID:0000000004095301

1.COMBINATION METER INPUT SIGNAL

1. Select “METER/M&A” on CONSULT-III.
2. Using “FUEL METER” of “DATA MONITOR”, compare the value of DATA MONITOR with fuel gauge pointer of combination meter.

Fuel gauge pointer	Reference value of data monitor [lit.]
Full	Approx. 79.3
3/4	Approx. 58.5
1/2	Approx. 37.1
1/4	Approx. 22.4
Empty	Approx. 7.6

Does the data monitor value approximately match the fuel gauge indication?

YES >> Inspection End.
NO >> Replace combination meter. Refer to MWI-90, "Removal and Installation".

Diagnosis Procedure

INFOID:0000000004095302

1.CHECK HARNESS CONNECTOR

1. Turn ignition switch OFF.
2. Check combination meter and fuel level sensor unit terminals (meter-side and harness-side) for poor connection.

Is the inspection result normal?

YES >> GO TO 2
NO >> Repair or replace terminals or connectors.

2.CHECK FUEL LEVEL SENSOR UNIT CIRCUIT

1. Disconnect combination meter connector and fuel level sensor unit connector.
2. Check continuity between combination meter harness connector and fuel level sensor unit and fuel pump harness connector.

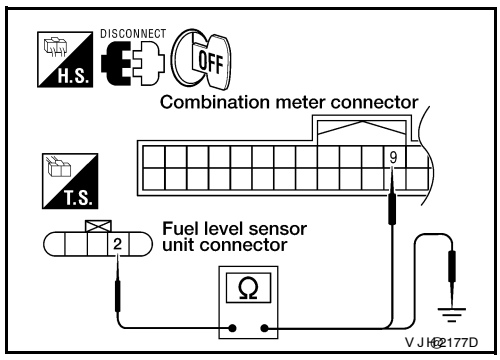

Terminals				Continuity
(+)		(-)		
Connector	Terminal	Connector	Terminal	
C5	2	M24	9	Yes

3. Check continuity between fuel level sensor unit and fuel pump harness connector and ground.

Terminals			Continuity
(+)		(-)	
Connector	Terminal	Ground	
C5	2		No

Is the inspection result normal?

YES >> GO TO 3

NO >> Repair harness or connector.

3.CHECK FUEL LEVEL SENSOR UNIT GROUND CIRCUIT

1. Check continuity between combination meter harness connector and fuel level sensor unit and fuel pump harness connector.

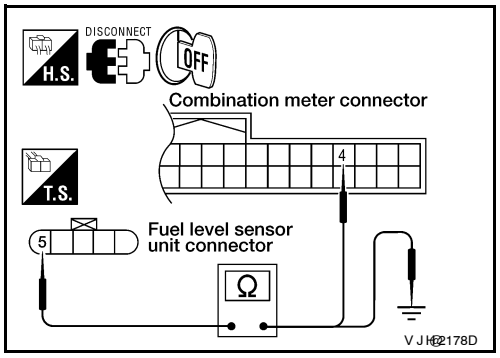

Terminals				Continuity
(+)		(-)		
Connector	Terminal	Connector	Terminal	
C5	5	M24	4	Yes

2. Check continuity between fuel level sensor unit and fuel pump harness connector and ground.

Terminals			Continuity
(+)		(-)	
Connector	Terminal	Ground	
C5	5		No

Is the inspection result normal?

YES >> GO TO 4
NO >> Repair harness or connector.

4.CHECK INSTALLATION CONDITION

Check fuel level sensor unit installation, and check whether the float arm interferes or binds with any of the internal components in the fuel tank.

Is the inspection result normal?

YES >> Inspection End.
NO >> Install the fuel level sensor unit properly.

Component Inspection

INFOID:0000000004095303

1.REMOVE FUEL LEVEL SENSOR UNIT

Remove the fuel level sensor unit. Refer to FL-11, "Removal and Installation".

>> GO TO 2

2.CHECK FUEL LEVEL SENSOR UNIT AND FUEL PUMP

Check the resistance between terminals 2 and 5.

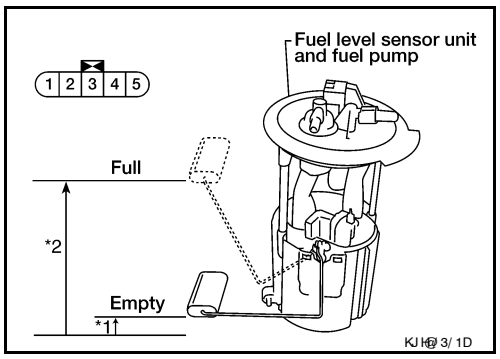

Terminal		Float position mm (in)			Resistance value (Approx.)
2	5	*1	Empty	10 (0.4)	81.5Ω
		*2	Full	211.1 (8.3)	5Ω

*1 and *2: When float arm is in contact with stopper.

Is inspection result normal?

YES >> Inspection End.
NO >> Replace fuel level sensor unit and fuel pump. Refer to FL-11, "Removal and Installation".

OIL PRESSURE SWITCH SIGNAL CIRCUIT

Description

INFOID:0000000004095304

Detects the engine oil pressure and transmits the oil pressure switch signal to the IPDM E/R.

Component Function Check

INFOID:0000000004095305

1.COMBINATION METER INPUT SIGNAL

1. Select “METER/M&A” on CONSULT-III.
2. Monitor “OIL W/L” of “DATA MONITOR” while operating ignition switch.

OIL W/L

When ignition switch is in ON position (Engine stopped) : ON

When engine is running : OFF

>> Inspection End.

Diagnosis Procedure

INFOID:0000000004095306

1.CHECK OIL PRESSURE SWITCH CIRCUIT

1. Turn ignition switch OFF.
2. Disconnect IPDM E/R connector E122 and oil pressure switch connector E208.
3. Check continuity between IPDM E/R harness connector E122 (A) terminal 42 and oil pressure switch harness connector E208 (B) terminal 1.

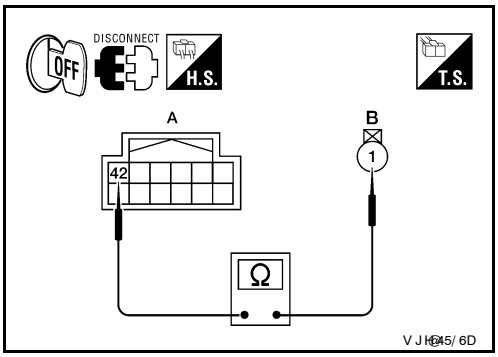

Continuity should exist.

Is the inspection result normal?

YES >> Inspection End.
NO >> Repair harness or connector.

Component Inspection

INFOID:0000000004095307

1.CHECK OIL PRESSURE SWITCH

Check continuity between oil pressure switch and ground.

Condition	Oil pressure [kPa (kg/cm^2, psi)]	Continuity
Engine stopped	Less than 29 (0.3, 4)	Yes
Engine running	More than 29 (0.3, 4)	No

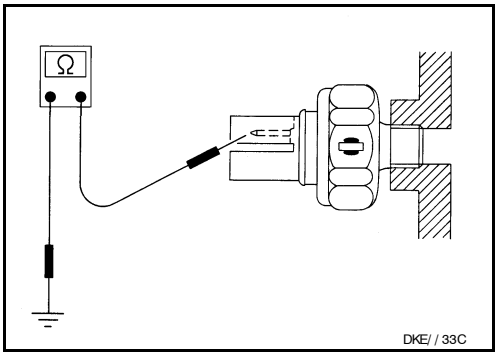

Is the inspection result normal?

YES >> Inspection End.
NO >> Replace the oil pressure switch.

COMPASS

Wiring Diagram

INFOID:0000000004095308

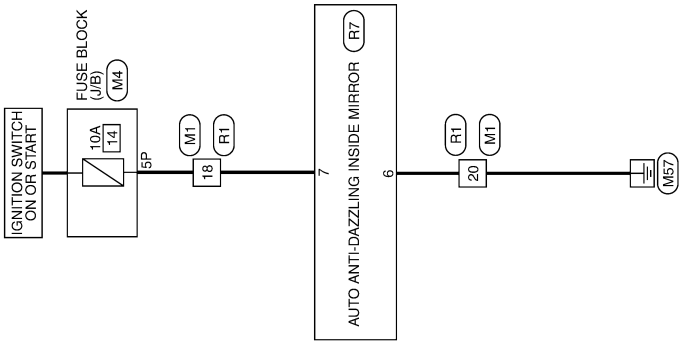

COMPASS

@AMV @ 075F

COMPASS CONNECTORS

Connector No.	M1
Connector Name	WIRE TO WIRE
Connector Color	WHITE

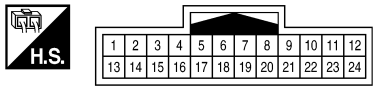

Terminal No.	Color of Wire	Signal Name
18	W/G	–
20	B	–

Connector No.	M4
Connector Name	FUSE BLOCK (J/B)
Connector Color	WHITE

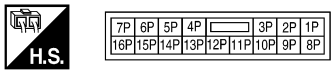

Terminal No.	Color of Wire	Signal Name
5P	W/G	–

Connector No.	R1
Connector Name	WIRE TO WIRE
Connector Color	WHITE

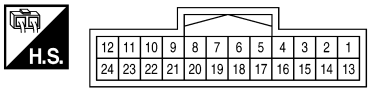

Terminal No.	Color of Wire	Signal Name
18	W/G	–
20	B	–

Connector No.	R7
Connector Name	AUTO ANTI-DAZZLING INSIDE MIRROR
Connector Color	BLACK

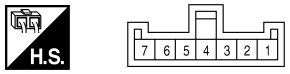

Terminal No.	Color of Wire	Signal Name
6	B	GND
7	W/G	IGN

@AMG0475FA

ECU DIAGNOSIS

COMBINATION METER

Reference Value

INFOID:0000000004095309

TERMINAL LAYOUT

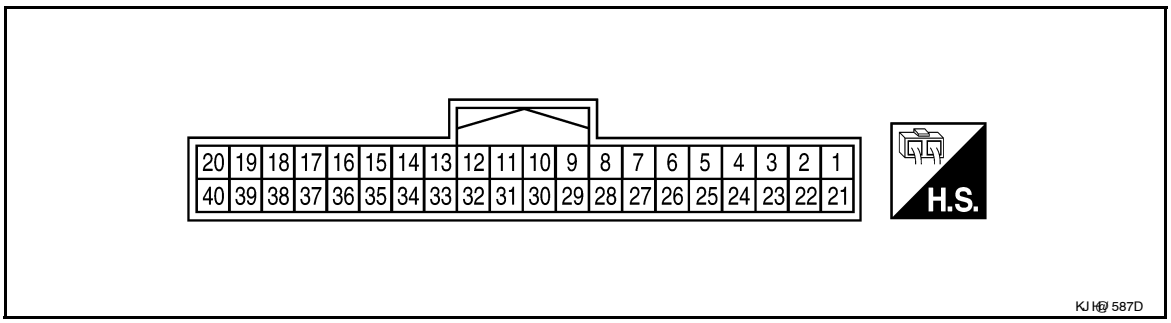

PHYSICAL VALUES

Terminal	Wire color	Item	Condition		Reference value (V) (Approx.)
			Ignition switch	Operation or condition	
2	P	Generator	ON	Generator voltage low	0
				Generator voltage normal	Battery voltage
3	R/Y	Battery power supply	—	—	Battery voltage
4	B/Y	Fuel level sensor ground	ON	—	0
6	SB	Vehicle speed signal output (8-pulse)	ON	Speedometer operated [When vehicle speed is approx. 40 km/h (25 MPH)]	**NOTE:** Maximum voltage may be 12V due to specifications (connected units). 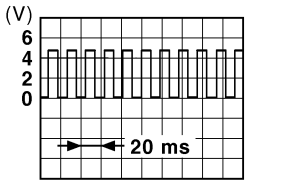 SJIA0532D
9	BR	Fuel level sensor signal	—	—	Refer to MWI-11, "FUEL GAUGE : System Description".
11	P	CAN-L	—	—	—
12	L	CAN-H	—	—	—
13	GR	Ground	—	—	0
16	W/G	Ignition switch ON or START	ON	—	Battery voltage
22	BR	Illumination control switch	—	—	Refer to INL-9, "System Description".
23	B	Ground	—	—	0
24	V	Seat belt buckle switch LH	ON	Unfastened (ON)	0
				Fastened (OFF)	Battery voltage
25	SB	DIFF LOCK indicator input	ON	DIFF LOCK indicator ON	0
				DIFF LOCK indicator OFF	Battery voltage
31	G	Parking brake switch	ON	Parking brake applied	0
				Parking brake released	Battery voltage

Terminal	Wire color	Item	Condition		Reference value (V) (Approx.)
			Ignition switch	Operation or condition	
32	SB	Brake fluid level switch	ON	Brake fluid level low	0
				Brake fluid level normal	Battery voltage
33	LG	Stop lamp switch	—	Brake pedal depressed	Battery voltage
				Brake pedal released	0
34	L	Washer fluid level switch	ON	Washer fluid level low	0
				Washer fluid level normal	Battery voltage
37	SB	Air bag warning lamp input	ON	Air bag warning lamp ON	4
				Air bag warning lamp OFF	0
39	G	Security indicator input	OFF	Security indicator ON	0
				Security indicator OFF	Battery voltage
40	LG	Seat belt buckle switch RH	ON	Unfastened (ON)	0
				Fastened (OFF)	Battery voltage

Wiring Diagram

INFOID:0000000004095310

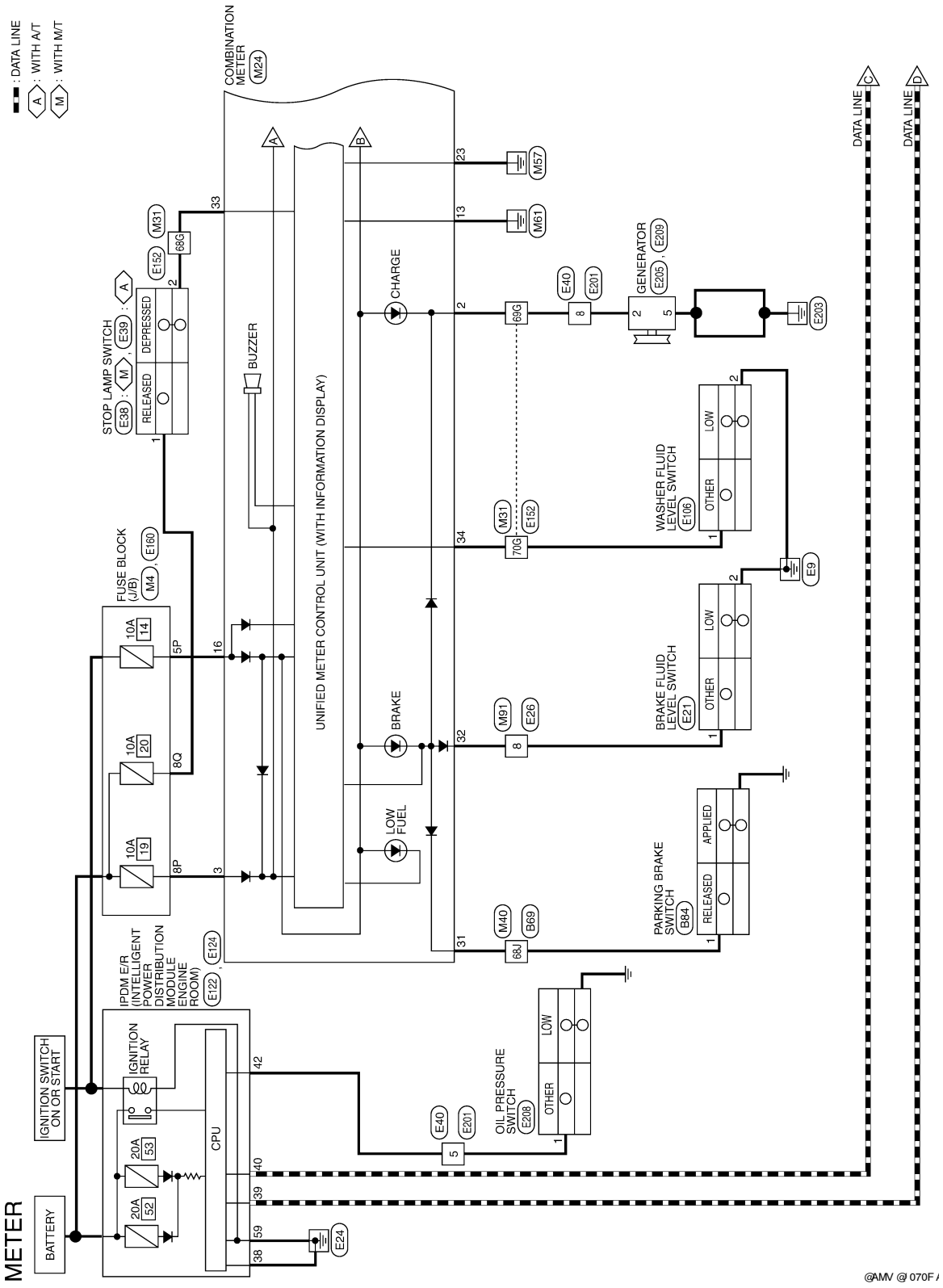

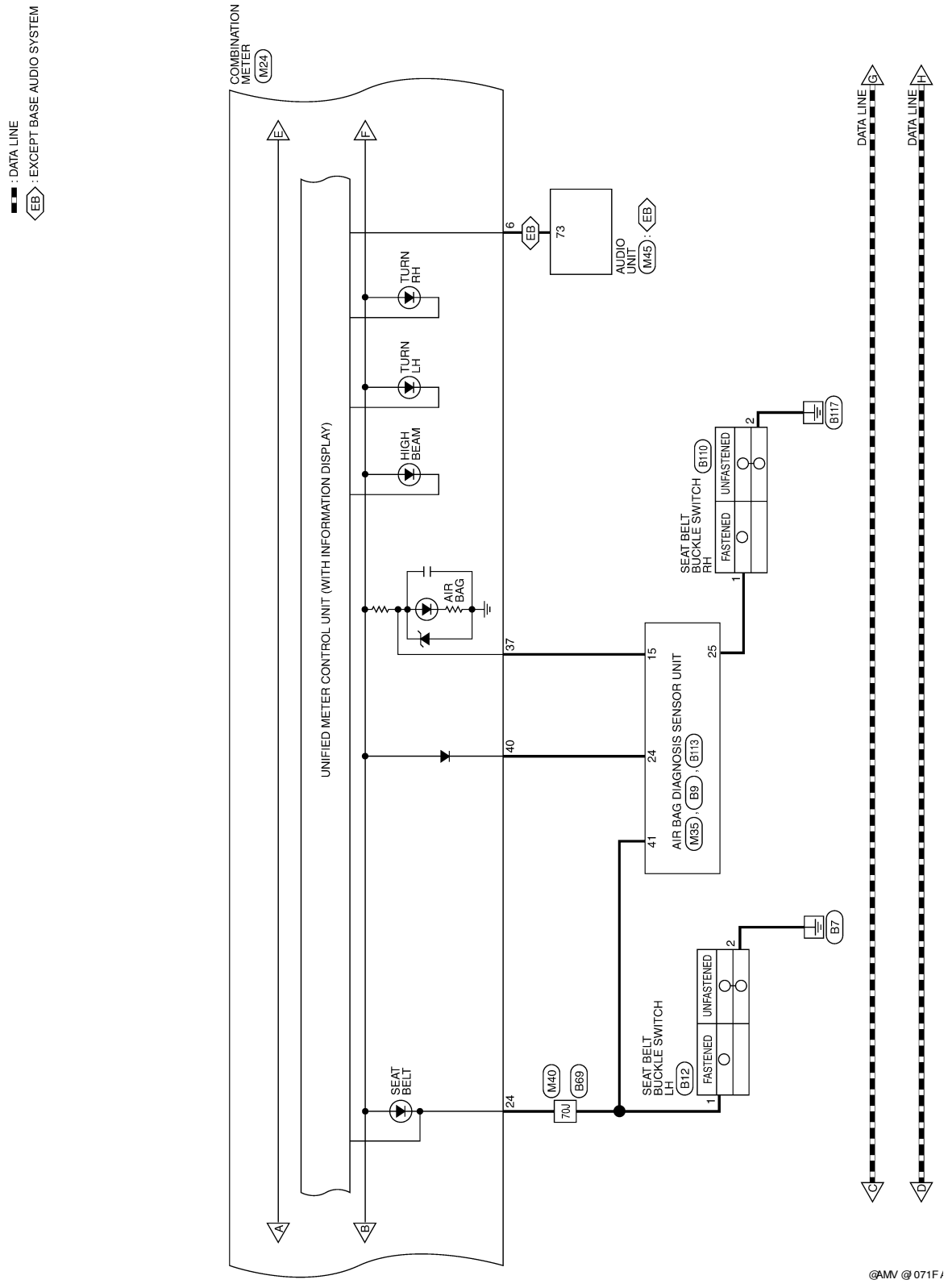
: DATA LINE
EB : EXCEPT BASE AUDIO SYSTEM
COMBINATION METER (M24)
UNIFIED METER CONTROL UNIT (WITH INFORMATION DISPLAY)
TURN RH
TURN LH
HIGH BEAM
AIR BAG
SEAT BELT
AUDIO UNIT (M45) : EB
AIR BAG DIAGNOSIS SENSOR UNIT (M35), (B9), (B113)
SEAT BELT BUCKLE SWITCH RH (B110)
SEAT BELT BUCKLE SWITCH LH (B12)
FASTENED
UNFASTENED
(M40) (B69) 70J
(B117)
(B7)
DATA LINE
@AMV @071F

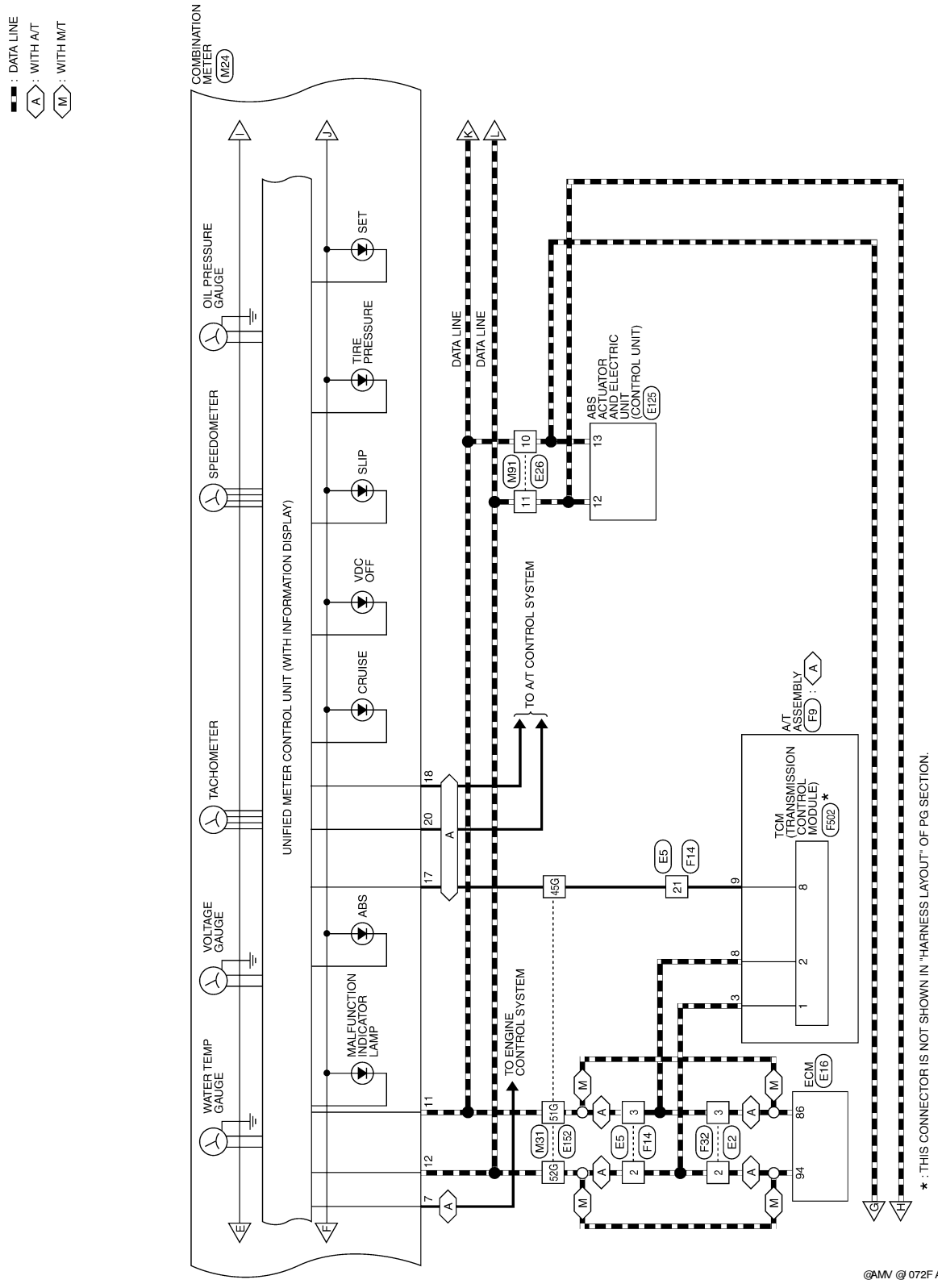
: DATA LINE
A : WITH A/T
M : WITH M/T
COMBINATION METER
M24
UNIFIED METER CONTROL UNIT (WITH INFORMATION DISPLAY)
OIL PRESSURE GAUGE
SPEEDOMETER
TACHOMETER
VOLTAGE GAUGE
WATER TEMP GAUGE
SET
TIRE PRESSURE
SLIP
VDC OFF
CRUISE
ABS
MALFUNCTION INDICATOR LAMP
DATA LINE
DATA LINE
ABS ACTUATOR AND ELECTRIC UNIT (CONTROL UNIT)
E125
M91
E26
TO A/T CONTROL SYSTEM
TO ENGINE CONTROL SYSTEM
A/T ASSEMBLY
F9
TCM (TRANSMISSION CONTROL MODULE)
F502
ECM
E16
M31
E152
E5
F14
F32
E2
45G
51G
52G
* : THIS CONNECTOR IS NOT SHOWN IN "HARNESS LAYOUT" OF PG SECTION.

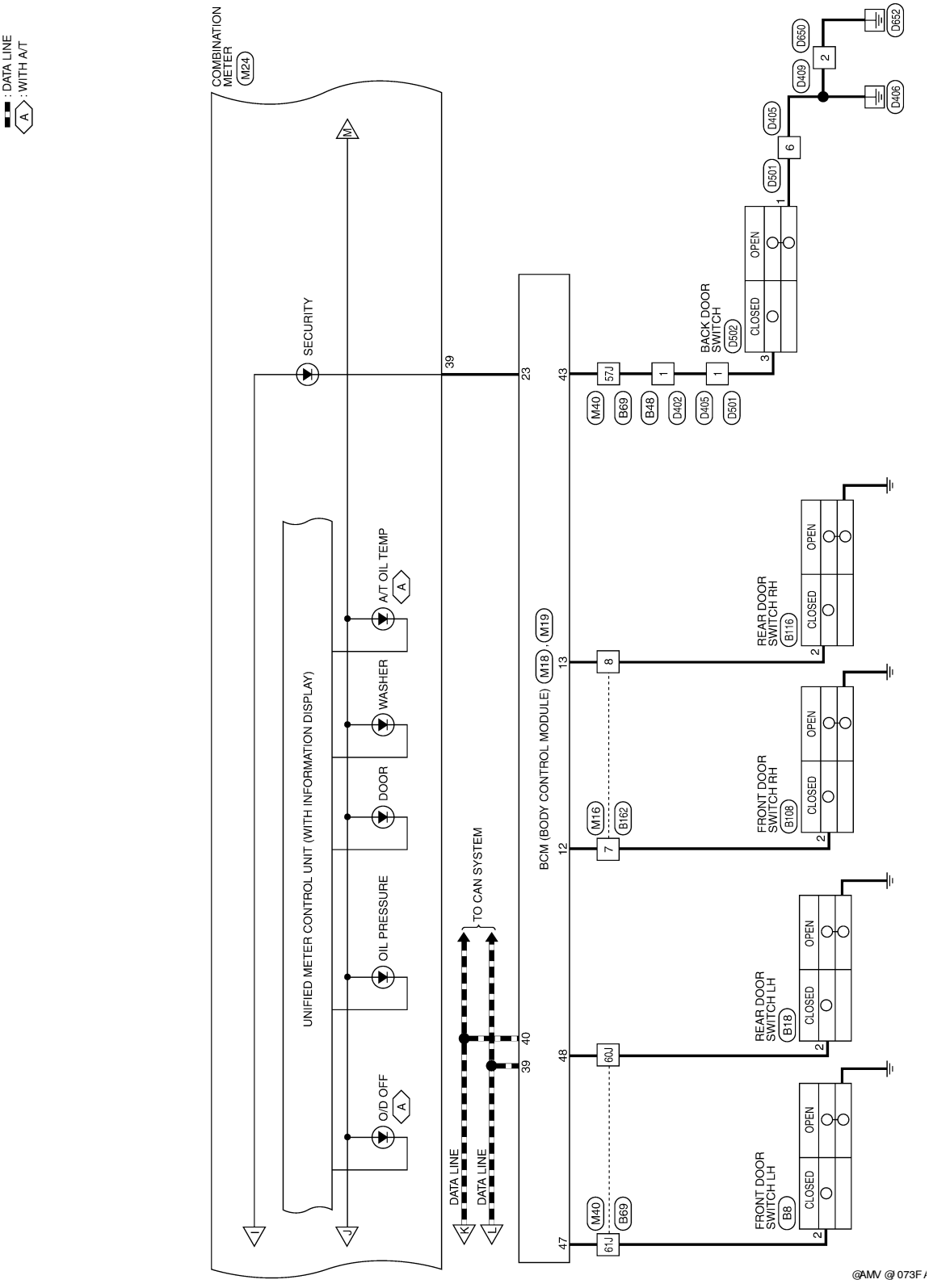
: DATA LINE
A : WITH A/T
COMBINATION METER
M24
SECURITY
UNIFIED METER CONTROL UNIT (WITH INFORMATION DISPLAY)
A/T OIL TEMP
WASHER
DOOR
OIL PRESSURE
O/D OFF
TO CAN SYSTEM
DATA LINE
DATA LINE
BCM (BODY CONTROL MODULE)
M18
M19
BACK DOOR SWITCH
D502
CLOSED
OPEN
REAR DOOR SWITCH RH
B116
FRONT DOOR SWITCH RH
B108
REAR DOOR SWITCH LH
B18
FRONT DOOR SWITCH LH
B8
M40
B69
B48
D402
D405
D501
D409
D650
D652
D406
M16
B162
@AMV @ 073F

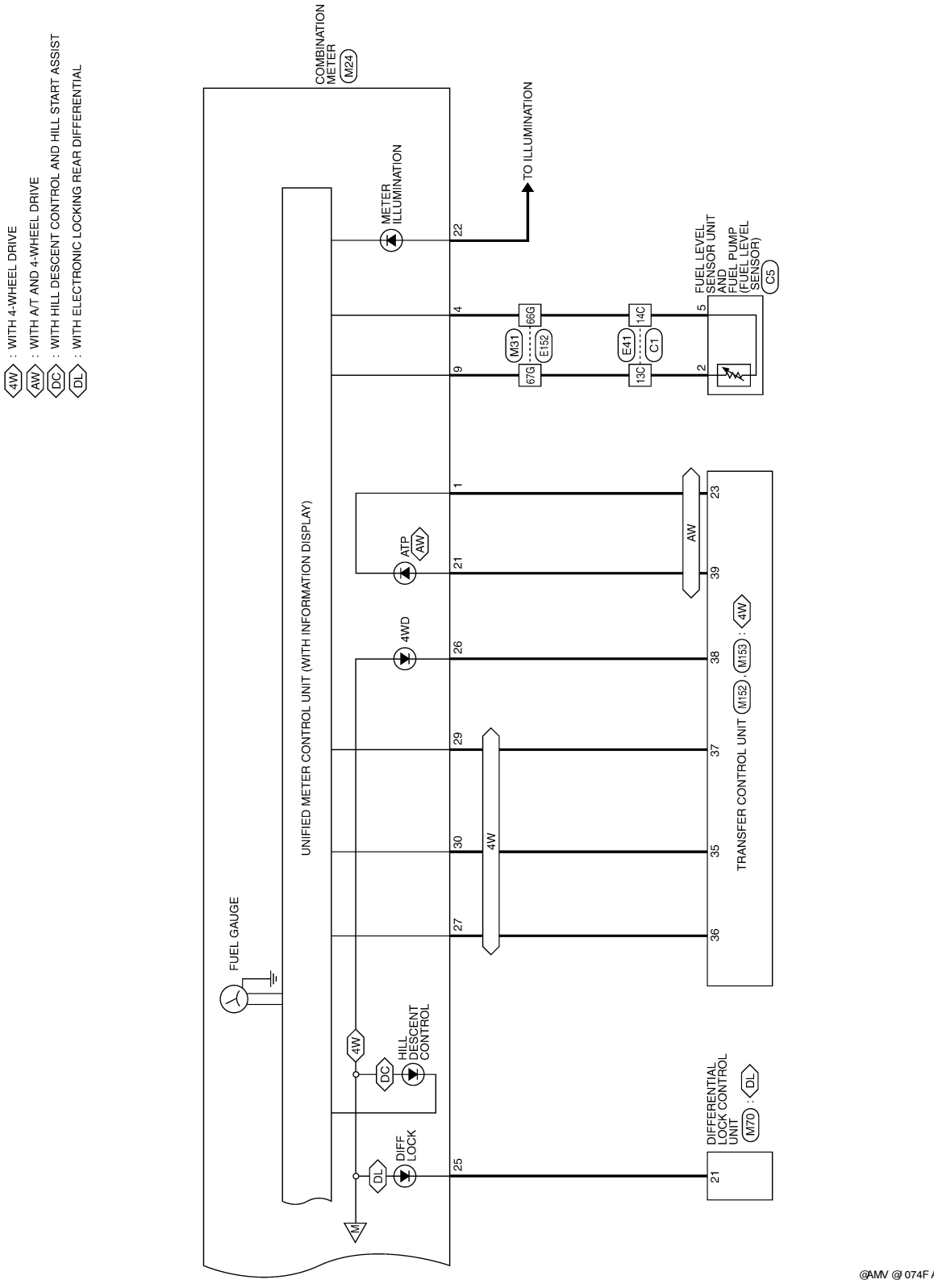
4W : WITH 4-WHEEL DRIVE
AW : WITH A/T AND 4-WHEEL DRIVE
DC : WITH HILL DESCENT CONTROL AND HILL START ASSIST
DL : WITH ELECTRONIC LOCKING REAR DIFFERENTIAL
COMBINATION METER (M24)
METER ILLUMINATION
TO ILLUMINATION
FUEL LEVEL SENSOR UNIT AND FUEL PUMP (FUEL LEVEL SENSOR) C5
M31 66G 67G E152
E41 14C 13C C1
UNIFIED METER CONTROL UNIT (WITH INFORMATION DISPLAY)
ATP AW
4WD
FUEL GAUGE
HILL DESCENT CONTROL
DIFF LOCK
AW
4W
TRANSFER CONTROL UNIT (M152) (M153) : 4W
DIFFERENTIAL LOCK CONTROL UNIT (M70) : DL
@AMV @ 074F

METER CONNECTORS

Connector No.	M4
Connector Name	FUSE BLOCK (J/B)
Connector Color	WHITE

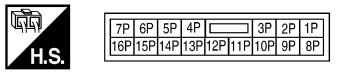

Terminal No.	Color of Wire	Signal Name
5P	W/G	–
8P	R/Y	–

Connector No.	M16
Connector Name	WIRE TO WIRE
Connector Color	WHITE

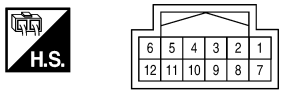

Terminal No.	Color of Wire	Signal Name
7	LG	–
8	L	–

Connector No.	M18
Connector Name	BCM (BODY CONTROL MODULE)
Connector Color	WHITE

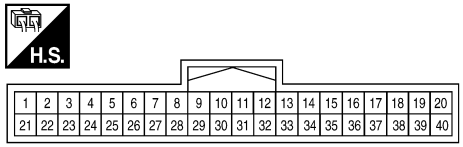

Terminal No.	Color of Wire	Signal Name
12	LG	DOOR SW (AS)
13	L	DOOR SW (RR)
23	G	SECURITY INDICATOR OUTPUT
39	L	CAN-H
40	P	CAN-L

Connector No.	M19
Connector Name	BCM (BODY CONTROL MODULE)
Connector Color	WHITE

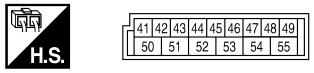

Terminal No.	Color of Wire	Signal Name
43	Y	BACK DOOR SW
47	GR	DOOR SW (DR)
48	P	DOOR SW (RL)

@AMG464FA

Connector No.	M24
Connector Name	COMBINATION METER
Connector Color	WHITE

H.S.

20	19	18	17	16	15	14	13	12	11	10	9	8	7	6	5	4	3	2	1
40	39	38	37	36	35	34	33	32	31	30	29	28	27	26	25	24	23	22	21

Terminal No.	Color of Wire	Signal Name
1	R	ATP-
2	P	CHARGE (ALT) INPUT
3	R/Y	BATTERY
4	B/Y	FUEL SENDER RETURN
5	–	–
6	SB	SPEED OUT 8
7	G	AT-PN ECM
8	–	–

Terminal No.	Color of Wire	Signal Name
9	BR	FUEL SENDER INPUT
10	–	–
11	P	CAN-L
12	L	CAN-H
13	GR	GROUND
14	–	–
15	–	–
16	W/G	RUN START
17	B	AT-PN SWITCH
18	L	AT 1 RANGE SWITCH
19	–	–
20	Y	O/D OFF SWITCH
21	LG	ATP+
22	BR	ILLUMINATION CONTROL
23	B	POWER GND
24	V	BUCKLE (SEATBELT) SW

Terminal No.	Color of Wire	Signal Name
25	SB	DIFF LOCK
26	GR	4WD FAIL
27	BR	4WD (LOCK) INPUT
28	–	–
29	O	4WD (4LO) INPUT
30	V	4WD (2WD) INPUT
31	G	PARK BRAKE SW
32	SB	BRAKE OIL SWITCH
33	LG	BRAKE PEDAL SW
34	L	WASHER FLUID SW
35	–	–
36	–	–
37	SB	AIRBAG CONT
38	–	–
39	G	SECURITY
40	LG	PASS SEATBELT

Connector No.	M31
Connector Name	WIRE TO WIRE
Connector Color	WHITE

H.S.

Terminal No.	Color of Wire	Signal Name
45G	B	–
51G	P	–
52G	L	–
66G	B/Y	–
67G	BR	–
68G	LG	–
69G	P	–
70G	L	–

Connector No.	M35
Connector Name	AIR BAG DIAGNOSIS SENSOR UNIT
Connector Color	YELLOW

H.S.

20	21	17						24	49	1
22	11	46	48	47	45	13	3	4	6	5
16	12	19	15	14	51	23	50	18	52	2

Terminal No.	Color of Wire	Signal Name
15	SB	WARN LP
24	LG	SEATBELT REMINDER

@AMH@ 465F A

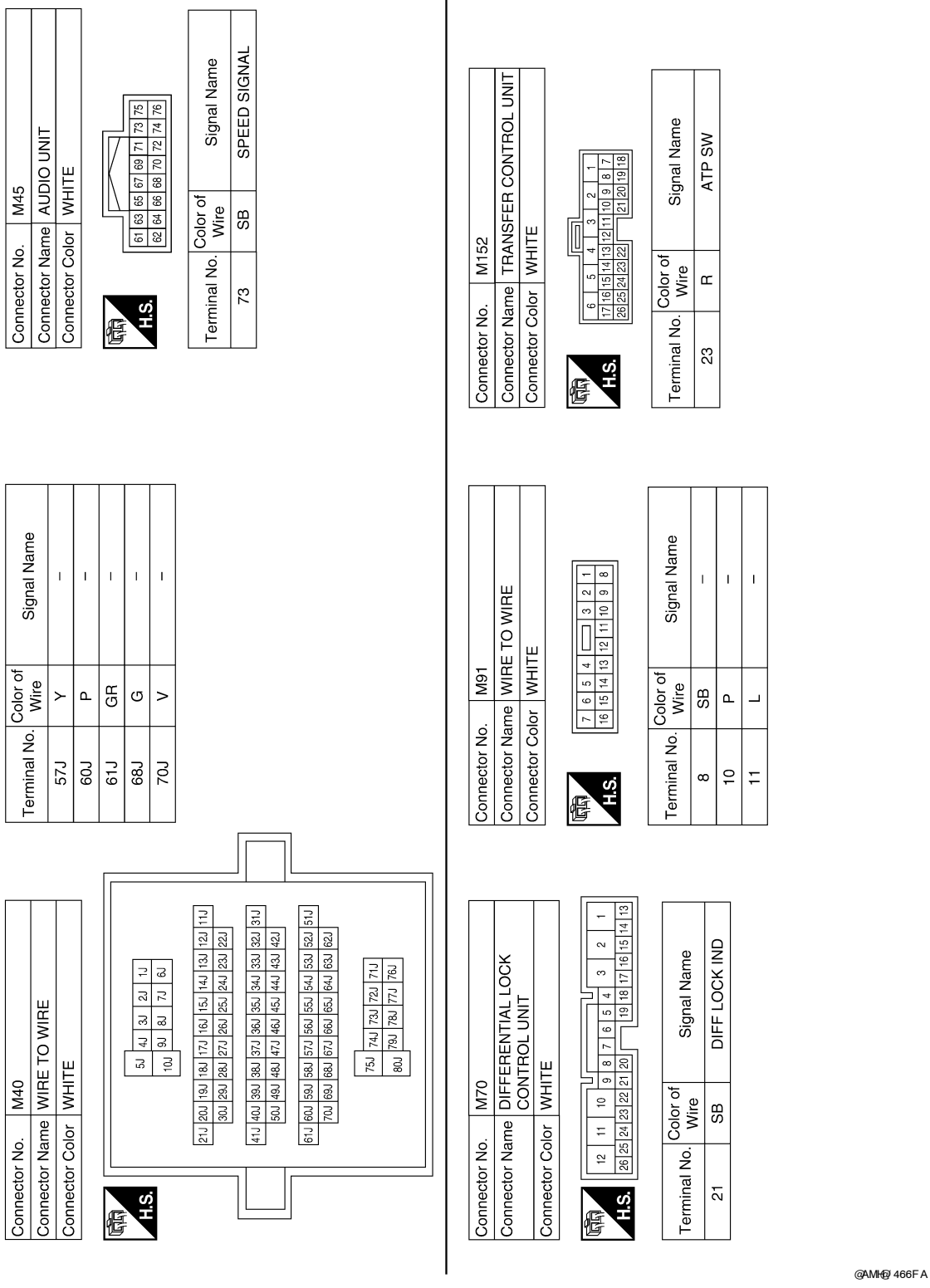
Connector No. M45
Connector Name AUDIO UNIT
Connector Color WHITE
H.S.
61 63 65 67 69 71 73 75
62 64 66 68 70 72 74 76
Terminal No. Color of Wire Signal Name
73 SB SPEED SIGNAL
Connector No. M152
Connector Name TRANSFER CONTROL UNIT
Connector Color WHITE
H.S.
6 5 4 3 2 1
17 16 15 14 13 12 11 10 9 8 7
26 25 24 23 22 21 20 19 18
Terminal No. Color of Wire Signal Name
23 R ATP SW
Connector No. M40
Connector Name WIRE TO WIRE
Connector Color WHITE
H.S.
5J 4J 3J 2J 1J
9J 8J 7J 6J
10J
21J 20J 19J 18J 17J 16J 15J 14J 13J 12J 11J
30J 29J 28J 27J 26J 25J 24J 23J 22J
41J 40J 39J 38J 37J 36J 35J 34J 33J 32J 31J
50J 49J 48J 47J 46J 45J 44J 43J 42J
61J 60J 59J 58J 57J 56J 55J 54J 53J 52J 51J
70J 69J 68J 67J 66J 65J 64J 63J 62J
75J 74J 73J 72J 71J
80J 79J 78J 77J 76J
Terminal No. Color of Wire Signal Name
57J Y –
60J P –
61J GR –
68J G –
70J V –
Connector No. M91
Connector Name WIRE TO WIRE
Connector Color WHITE
H.S.
7 6 5 4 3 2 1
16 15 14 13 12 11 10 9 8
Terminal No. Color of Wire Signal Name
8 SB –
10 P –
11 L –
Connector No. M70
Connector Name DIFFERENTIAL LOCK CONTROL UNIT
Connector Color WHITE
H.S.
12 11 10 9 8 7 6 5 4 3 2 1
26 25 24 23 22 21 20 19 18 17 16 15 14 13
Terminal No. Color of Wire Signal Name
21 SB DIFF LOCK IND
AMHF0466FA

Connector No.	M153
Connector Name	TRANSFER CONTROL UNIT
Connector Color	WHITE

H.S.

32	31	30	29	28	27
42	41	40	39	38	37	36	35	34	33
50	49	48	47	46	45	44	43

Terminal No.	Color of Wire	Signal Name
35	V	2WD IND
36	BR	LOCK IND
37	O	4LO IND
38	GR	4WD FAIL IND
39	LG	ATP IND

Connector No.	E2
Connector Name	WIRE TO WIRE
Connector Color	WHITE

H.S.

1	2	3		4	5	6	7
8	9	10	11	12	13	14	15	16

Terminal No.	Color of Wire	Signal Name
2	L	–
3	P	–

Connector No.	E5
Connector Name	WIRE TO WIRE
Connector Color	WHITE

H.S.

1	2	3	4	5	6	7	8	9	10	11	12
13	14	15	16	17	18	19	20	21	22	23	24

Terminal No.	Color of Wire	Signal Name
2	L	–
3	P	–
21	R	–

Connector No.	E16
Connector Name	ECM
Connector Color	BLACK

H.S.

106	107	108	109	110	111	112	113		119		120	121
98	99	100	101	102	103	104	105			117		118
90	91	92	93	94	95	96	97				114	115	116
82	83	84	85	86	87	88	89					

Terminal No.	Color of Wire	Signal Name
86	P	CAN-L
94	L	CAN-H

Connector No.	E21
Connector Name	BRAKE FLUID LEVEL SWITCH
Connector Color	GRAY

H.S.

A	1
	2

Terminal No.	Color of Wire	Signal Name
1	SB	–
2	B	–

Connector No.	E26
Connector Name	WIRE TO WIRE
Connector Color	WHITE

H.S.

1	2	3		4	5	6	7
8	9	10	11	12	13	14	15	16

Terminal No.	Color of Wire	Signal Name
8	SB	–
10	P	–
11	L	–

@AMH@ 467F A

Connector No.	E40
Connector Name	WIRE TO WIRE
Connector Color	GRAY

H.S.

Terminal No.	Color of Wire	Signal Name
5	GR	–
8	P	–

Connector No.	E39
Connector Name	STOP LAMP SWITCH (WITH A/T)
Connector Color	WHITE

H.S.

Terminal No.	Color of Wire	Signal Name
1	R/B	–
2	Y	–

Connector No.	E38
Connector Name	STOP LAMP SWITCH (WITH M/T)
Connector Color	BLACK

H.S.

Terminal No.	Color of Wire	Signal Name
1	R/B	–
2	Y	–

Connector No.	E122
Connector Name	IPDM E/R (INTELLIGENT POWER DISTRIBUTION MODULE ENGINE ROOM)
Connector Color	WHITE

H.S.

Terminal No.	Color of Wire	Signal Name
38	B	GND (SIGNAL)
39	L	CAN-H
40	P	CAN-L
42	GR	OIL PRESSURE SW

Connector No.	E106
Connector Name	WASHER FLUID LEVEL SWITCH
Connector Color	BROWN

H.S.

Terminal No.	Color of Wire	Signal Name
1	L	–
2	B	–

Connector No.	E41
Connector Name	WIRE TO WIRE
Connector Color	BLACK

H.S.

Terminal No.	Color of Wire	Signal Name
13C	BR	–
14C	B/Y	–

@AMH@ 468F A

Connector No.	E124
Connector Name	IPDM E/R (INTELLIGENT POWER DISTRIBUTION MODULE ENGINE ROOM)
Connector Color	BLACK

H.S.

59	58	57	
62	61	60	

Terminal No.	Color of Wire	Signal Name
59	B	GND (POWER)

Connector No.	E125
Connector Name	ABS ACTUATOR AND ELECTRIC UNIT (CONTROL UNIT)
Connector Color	BLACK

H.S.

1	2	3	4	5	6	7	8	9	10	11	12	13	14	15	16	
17	18	19	20	21	22	23	24	25	26	27	28	29	30	31		
32	33	34	35	36	37	38	39	40	41	42	43	44	45	46	47	

Terminal No.	Color of Wire	Signal Name
12	L	CAN-H
13	P	CAN-L

Connector No.	E152
Connector Name	WIRE TO WIRE
Connector Color	WHITE

H.S.

Terminal No.	Color of Wire	Signal Name
45G	B	–
51G	P	–
52G	L	–
66G	B/Y	–
67G	BR	–
68G	LG	–
69G	P	–
70G	L	–

Connector No.	E160
Connector Name	FUSE BLOCK (J/B)
Connector Color	WHITE

H.S.

3Q		2Q	1Q
8Q	7Q	6Q	5Q
4Q			

Terminal No.	Color of Wire	Signal Name
8Q	R/B	–

@AMH@ 47/ FA

Connector No.	E208
Connector Name	OIL PRESSURE SWITCH
Connector Color	GRAY

H.S.

Terminal No.	Color of Wire	Signal Name
1	GR	–

Connector No.	E205
Connector Name	GENERATOR
Connector Color	BLACK

H.S.

Terminal No.	Color of Wire	Signal Name
2	P	L

Connector No.	E201
Connector Name	WIRE TO WIRE
Connector Color	GRAY

H.S.

Terminal No.	Color of Wire	Signal Name
5	GR	–
8	P	–

Connector No.	F14
Connector Name	WIRE TO WIRE
Connector Color	WHITE

H.S.

Terminal No.	Color of Wire	Signal Name
2	L	–
3	P	–
21	R	–

Connector No.	F9
Connector Name	A/T ASSEMBLY
Connector Color	GREEN

H.S.

Terminal No.	Color of Wire	Signal Name
3	L	–
8	P	–
9	R	–

Connector No.	E209
Connector Name	GENERATOR
Connector Color	–

H.S.

Terminal No.	Color of Wire	Signal Name
5	B	E

@AMH@ 470F A

Connector No.	C1
Connector Name	WIRE TO WIRE
Connector Color	BLACK

H.S.

40C	31C	10C	1C
41C	32C	11C	2C
42C	33C	12C	3C
43C	34C	13C	4C
44C	35C	14C	5C
45C	36C	15C	6C
46C	37C	16C	7C
47C	38C	17C	8C
48C	39C	18C	9C
		19C	
		26C	20C
		27C	21C
		28C	22C
		29C	23C
		30C	24C
			25C

Terminal No.	Color of Wire	Signal Name
13C	BR	–
14C	B/Y	–

Connector No.	B9
Connector Name	AIR BAG DIAGNOSIS SENSOR UNIT
Connector Color	YELLOW

H.S.

33	41	29	42	30	34
44	37	38	9	43	10

Terminal No.	Color of Wire	Signal Name
41	O	BUCKLE SW LH

Connector No.	F502
Connector Name	TCM (TRANSMISSION CONTROL MODULE)
Connector Color	GRAY

H.S.

10	9	8	7	6	5	4	3	2	1

Terminal No.	Color of Wire	Signal Name
1	BR	CAN-H
2	L/Y	CAN-L
8	G	STARTER-RLY

Connector No.	B8
Connector Name	FRONT DOOR SWITCH LH
Connector Color	WHITE

H.S.

1	2	3

Terminal No.	Color of Wire	Signal Name
2	GR	–

Connector No.	F32
Connector Name	WIRE TO WIRE
Connector Color	WHITE

H.S.

7	6	5	4		3	2	1
16	15	14	13	12	11	10	9	8

Terminal No.	Color of Wire	Signal Name
2	L	–
3	P	–

Connector No.	C5
Connector Name	FUEL LEVEL SENSOR UNIT AND FUEL PUMP
Connector Color	GRAY

H.S.

1	2	3	4	5

Terminal No.	Color of Wire	Signal Name
2	BR	–
5	B	–

@AMH@ 471FA

Connector No.	B12
Connector Name	SEAT BELT BUCKLE SWITCH LH
Connector Color	WHITE

H.S.

Terminal No.	Color of Wire	Signal Name
1	O	–
2	B	–

Connector No.	B18
Connector Name	REAR DOOR SWITCH LH
Connector Color	WHITE

H.S.

Terminal No.	Color of Wire	Signal Name
2	P	–

Connector No.	B48
Connector Name	WIRE TO WIRE
Connector Color	WHITE

H.S.

Terminal No.	Color of Wire	Signal Name
1	Y	–

Connector No.	B69
Connector Name	WIRE TO WIRE
Connector Color	WHITE

H.S.

Terminal No.	Color of Wire	Signal Name
57J	Y	–
60J	P	–
61J	GR	–
68J	G	–
70J	V	–

Connector No.	B84
Connector Name	PARKING BRAKE SWITCH
Connector Color	BLACK

H.S.

Terminal No.	Color of Wire	Signal Name
1	G	–

@AMH@ 472F A

Connector No.	B113
Connector Name	AIR BAG DIAGNOSIS SENSOR UNIT
Connector Color	YELLOW

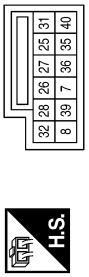

Terminal No.	Color of Wire	Signal Name
25	L	BUCKLE SW RH

Connector No.	B110
Connector Name	SEAT BELT BUCKLE SWITCH RH
Connector Color	WHITE

Terminal No.	Color of Wire	Signal Name
1	L	–
2	B	–

Connector No.	B108
Connector Name	FRONT DOOR SWITCH RH
Connector Color	WHITE

Terminal No.	Color of Wire	Signal Name
2	LG	–

Connector No.	D402
Connector Name	WIRE TO WIRE
Connector Color	WHITE

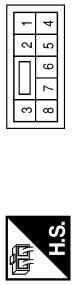

Terminal No.	Color of Wire	Signal Name
1	Y	–

Connector No.	B162
Connector Name	WIRE TO WIRE
Connector Color	WHITE

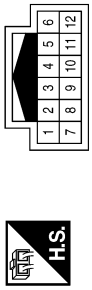

Terminal No.	Color of Wire	Signal Name
7	LG	–
8	L	–

Connector No.	B116
Connector Name	REAR DOOR SWITCH RH
Connector Color	WHITE

Terminal No.	Color of Wire	Signal Name
2	L	–

@AMH@ 473F A

Connector No.	D501
Connector Name	WIRE TO WIRE
Connector Color	WHITE

H.S.

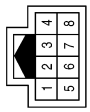

Terminal No.	Color of Wire	Signal Name
1	Y	–
6	B	–

Connector No.	D409
Connector Name	WIRE TO WIRE
Connector Color	WHITE

H.S.

Terminal No.	Color of Wire	Signal Name
2	B	–

Connector No.	D650
Connector Name	WIRE TO WIRE
Connector Color	WHITE

H.S.

Terminal No.	Color of Wire	Signal Name
2	B	–

Connector No.	D405
Connector Name	WIRE TO WIRE
Connector Color	WHITE

H.S.

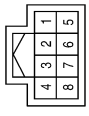

Terminal No.	Color of Wire	Signal Name
1	Y	–
6	B	–

Connector No.	D502
Connector Name	BACK DOOR SWITCH
Connector Color	WHITE

H.S.

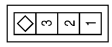

Terminal No.	Color of Wire	Signal Name
1	B	–
3	Y	–

Fail Safe

INFOID:0000000004095311

The combination meter performs a fail-safe operation for the functions listed below when communication is lost.

Function		Specifications
Speedometer		Zero indication.
Tachometer		
Fuel gauge		
Engine coolant temperature gauge		
Engine oil pressure gauge		
Voltage gauge		
Illumination control	Meter illumination	Change to nighttime mode when communication is lost.
Segment LCD	Odometer	Freeze current indication.
	A/T position	Display turns off.
Buzzer		Buzzer turns off.
Warning lamp/indicator lamp	ABS warning lamp	Lamp turns on when communication is lost.
	Brake warning lamp	
	VDC OFF indicator lamp	
	SLIP indicator lamp	
	AT oil temp warning lamp	Lamp turns off when communication is lost.
	Low washer fluid warning lamp	
	Hill descent control indicator lamp	
	Door open warning lamp	
	CRUISE indicator lamp	
	SET indicator lamp	
	O/D OFF indicator lamp	
	Oil pressure warning lamp	
	Malfunction indicator lamp	
	Air bag warning lamp	
	High beam indicator	
	Turn signal indicator lamp	
	Driver and passenger seat belt warning lamp	Lamp turns off when disconnected.
	Charge warning lamp	
	Security indicator lamp	
	4WD indicator lamp	
	ATP indicator lamp	
	Differential lock indicator lamp	
	Low tire pressure warning lamp	Lamp will flash every second for 1 minute and then stay on continuously thereafter.

DTC Index

INFOID:0000000004095312

CONSULT-III display	Malfunction	Reference page
CAN COMM CIRC [U1000]	Malfunction is detected in CAN communication. **CAUTION:** **Even when there is no malfunction on CAN communication system, malfunction may be misinterpreted when battery has low voltage (when maintaining 7 - 8 V for about 2 seconds) or 10A fuse [No. 19, located in the fuse block (J/B)] is disconnected.**	MWI-27
VEHICLE SPEED CIRC [B2205]	Malfunction is detected when an erroneous speed signal is input. **CAUTION:** **Even when there is no malfunction on speed signal system, malfunction may be misinterpreted when battery has low voltage (when maintaining 7 - 8 V for about 2 seconds).**	MWI-28

NOTE:
"TIME" indicates the following.
- 0: Indicates that a malfunction is detected at present.
- 1-63: Indicates that a malfunction was detected in the past. (Displays number of ignition switch OFF → ON cycles after malfunction is detected. Self-diagnosis result is erased when "63" is exceeded.)

BCM (BODY CONTROL MODULE)

Reference Value

INFOID:0000000004469756

VALUES ON THE DIAGNOSIS TOOL

Monitor Item	Condition	Value/Status
IGN ON SW	Ignition switch OFF or ACC	OFF
	Ignition switch ON	ON
KEY ON SW	Mechanical key is removed from key cylinder	OFF
	Mechanical key is inserted to key cylinder	ON
CDL LOCK SW	Door lock/unlock switch does not operate	OFF
	Press door lock/unlock switch to the lock side	ON
CDL UNLOCK SW	Door lock/unlock switch does not operate	OFF
	Press door lock/unlock switch to the unlock side	ON
DOOR SW-DR	Driver's door closed	OFF
	Driver's door opened	ON
DOOR SW-AS	Passenger door closed	OFF
	Passenger door opened	ON
DOOR SW-RR	Rear RH door closed	OFF
	Rear RH door opened	ON
DOOR SW-RL	Rear LH door closed	OFF
	Rear LH door opened	ON
BACK DOOR SW	Back door closed	OFF
	Back door opened	ON
KEY CYL LK-SW	Other than driver door key cylinder LOCK position	OFF
	Driver door key cylinder LOCK position	ON
KEY CYL UN-SW	Other than driver door key cylinder UNLOCK position	OFF
	Driver door key cylinder UNLOCK position	ON
KEYLESS LOCK	“LOCK” button of key fob is not pressed	OFF
	“LOCK” button of key fob is pressed	ON
KEYLESS UNLOCK	“UNLOCK” button of key fob is not pressed	OFF
	“UNLOCK” button of key fob is pressed	ON
ACC ON SW	Ignition switch OFF	OFF
	Ignition switch ACC or ON	ON
REAR DEF SW	Rear window defogger switch OFF	OFF
	Rear window defogger switch ON	ON
LIGHT SW 1ST	Lighting switch OFF	OFF
	Lighting switch 1ST	ON
BUCKLE SW	The seat belt (driver side) is unfastened. [Seat belt switch (driver side) OFF]	OFF
	The seat belt (driver side) is fastened. [Seat belt switch (driver side) ON]	ON
KEYLESS PANIC	PANIC button of key fob is not pressed	OFF
	PANIC button of key fob is pressed	ON
KEYLESS TRUNK	**NOTE:** The item is indicated, but not monitored.	OFF

Monitor Item	Condition	Value/Status
TRNK OPN MNTR	**NOTE:** The item is indicated, but not monitored.	OFF
RKE LCK-UNLCK	LOCK/UNLOCK button of key fob is not pressed and held simultaneously	OFF
	LOCK/UNLOCK button of key fob is pressed and held simultaneously	ON
RKE KEEP UNLK	UNLOCK button of key fob is not pressed	OFF
	UNLOCK button of key fob is pressed and held	ON
HI BEAM SW	Lighting switch OFF	OFF
	Lighting switch HI	ON
HEAD LAMP SW 1	Lighting switch OFF	OFF
	Lighting switch 2ND	ON
HEAD LAMP SW 2	Lighting switch OFF	OFF
	Lighting switch 2ND	ON
AUTO LIGHT SW	**NOTE:** The item is indicated, but not monitored.	OFF
PASSING SW	Other than lighting switch PASS	OFF
	Lighting switch PASS	ON
FR FOG SW	Front fog lamp switch OFF	OFF
	Front fog lamp switch ON	ON
RR FOG SW	**NOTE:** The item is indicated, but not monitored.	OFF
TURN SIGNAL R	Turn signal switch OFF	OFF
	Turn signal switch RH	ON
TURN SIGNAL L	Turn signal switch OFF	OFF
	Turn signal switch LH	ON
CARGO LAMP SW	Cargo lamp switch OFF	OFF
	Cargo lamp switch ON	ON
OPTICAL SENSOR	**NOTE:** The item is indicated, but not monitored.	OFF
IGN SW CAN	Ignition switch OFF or ACC	OFF
	Ignition switch ON	ON
FR WIPER HI	Front wiper switch OFF	OFF
	Front wiper switch HI	ON
FR WIPER LOW	Front wiper switch OFF	OFF
	Front wiper switch LO	ON
FR WIPER INT	Front wiper switch OFF	OFF
	Front wiper switch INT	ON
FR WASHER SW	Front washer switch OFF	OFF
	Front washer switch ON	ON
INT VOLUME	Wiper intermittent dial is in a dial position 1 - 7	1 - 7
FR WIPER STOP	Any position other than front wiper stop position	OFF
	Front wiper stop position	ON
VEHICLE SPEED	While driving	Equivalent to speedometer reading
RR WIPER ON	Rear wiper switch OFF	OFF
	Rear wiper switch ON	ON

Monitor Item	Condition	Value/Status
RR WIPER INT	Rear wiper switch OFF	OFF
	Rear wiper switch INT	ON
RR WASHER SW	Rear washer switch OFF	OFF
	Rear washer switch ON	ON
RR WIPER STOP	Any position other than rear wiper stop position	OFF
	Rear wiper stop position	ON
H/L WASH SW	**NOTE:** The item is indicated, but not monitored.	OFF
HAZARD SW	Hazard switch OFF	OFF
	Hazard switch ON	ON
BRAKE SW	Brake pedal is not depressed	OFF
	Brake pedal is depressed	ON
FAN ON SIG	Blower fan motor switch OFF	OFF
	Blower fan motor switch ON (other than OFF)	ON
AIR COND SW	Compressor ON is not requested from auto amp. (A/C indicator OFF, blower fan motor switch OFF or etc.)	OFF
	Compressor ON is requested from auto amp. (A/C indicator ON and blower fan motor switch ON).	ON
TRNK OPNR SW	**NOTE:** The item is indicated, but not monitored.	OFF
TRUNK CYL SW	**NOTE:** The item is indicated, but not monitored.	OFF
HOOD SW	**NOTE:** The item is indicated, but not monitored.	OFF
OIL PRESS SW	• Ignition switch OFF or ACC • Engine running	OFF
	Ignition switch ON	ON
AIR PRESS FL	Ignition switch ON (Only when the signal from the transmitter is received)	Air pressure of front LH tire
AIR PRESS FR	Ignition switch ON (Only when the signal from the transmitter is received)	Air pressure of front RH tire
AIR PRESS RR	Ignition switch ON (Only when the signal from the transmitter is received)	Air pressure of rear RH tire
AIR PRESS RL	Ignition switch ON (Only when the signal from the transmitter is received)	Air pressure of rear LH tire
ID REGST FL1	ID of front LH tire transmitter is registered	DONE
	ID of front LH tire transmitter is not registered	YET
ID REGST FR1	ID of front RH tire transmitter is registered	DONE
	ID of front RH tire transmitter is not registered	YET
ID REGST RR1	ID of rear RH tire transmitter is registered	DONE
	ID of rear RH tire transmitter is not registered	YET
ID REGST RL1	ID of rear LH tire transmitter is registered	DONE
	ID of rear LH tire transmitter is not registered	YET
WARNING LAMP	Tire pressure indicator OFF	OFF
	Tire pressure indicator ON	ON
BUZZER	Tire pressure warning alarm is not sounding	OFF
	Tire pressure warning alarm is sounding	ON

Terminal Layout

INFOID:0000000004469757

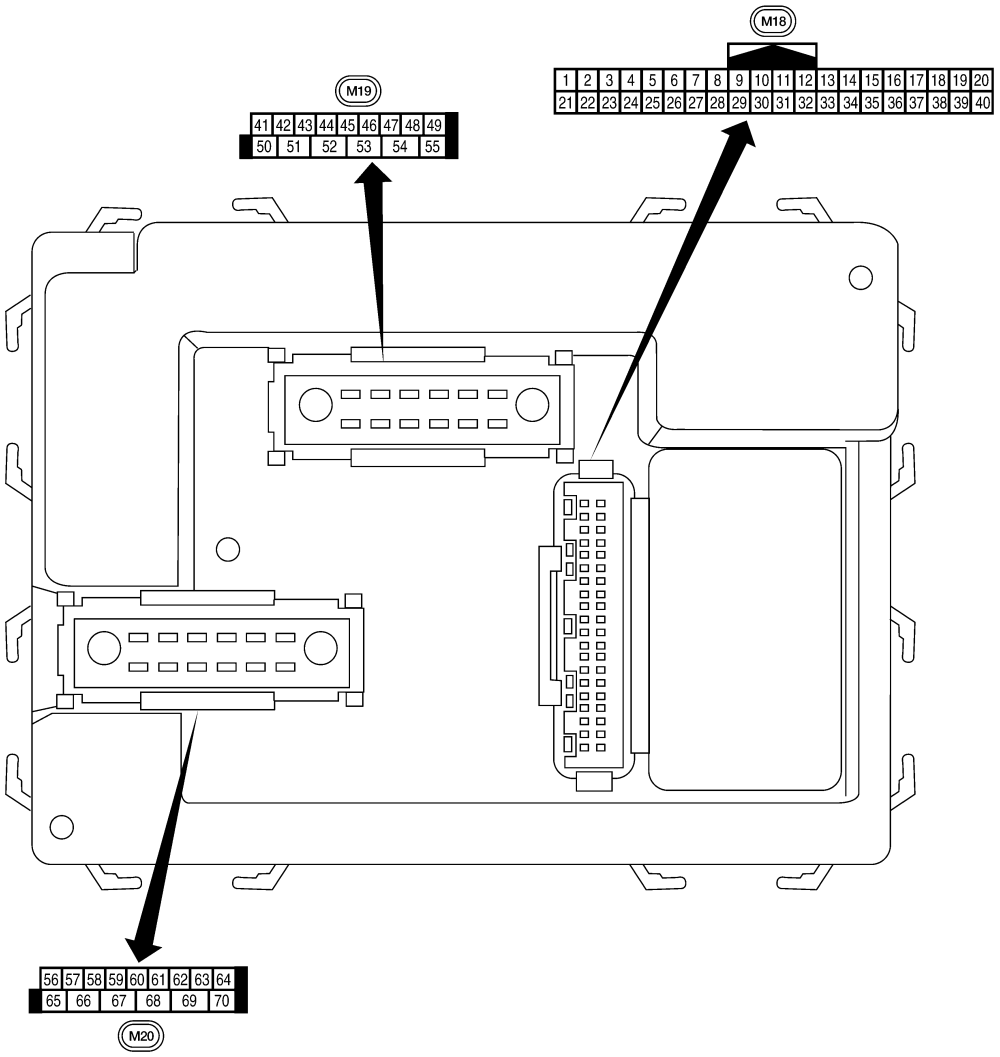

KHF01332D

Physical Values

INFOID:0000000004469758

Terminal	Wire color	Signal name	Signal input/ output	Measuring condition		Reference value or waveform (Approx.)
				Ignition switch	Operation or condition	
1	BR	Ignition keyhole illumination	Output	OFF	Door is locked (SW OFF)	Battery voltage
					Door is unlocked (SW ON)	0V
2	P	Combination switch input 5	Input	ON	Lighting, turn, wiper OFF Wiper dial position 4	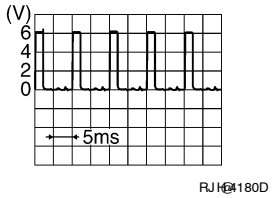 RJIA4180D
3	SB	Combination switch input 4	Input	ON	Lighting, turn, wiper OFF Wiper dial position 4	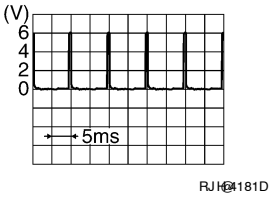 RJIA4181D
4	V	Combination switch input 3	Input	ON	Lighting, turn, wiper OFF Wiper dial position 4	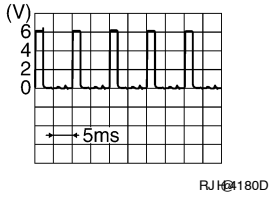 RJIA4180D
5	L	Combination switch input 2	Input	ON	Lighting, turn, wiper OFF Wiper dial position 4	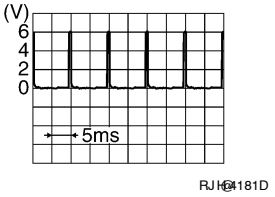 RJIA4181D
6	R	Combination switch input 1				
7	GR	Front door lock assembly LH (key cylinder switch) and back door key cylinder switch (unlock)	Input	OFF	ON (open, 2nd turn)	Momentary 1.5V
					OFF (closed)	0V
8	SB	Front door lock assembly LH (key cylinder switch) and back door key cylinder switch (lock)	Input	OFF	ON (open)	Momentary 1.5V
					OFF (closed)	0V
9	Y	Rear window defogger switch	Input	ON	Rear window defogger switch ON	0V
					Rear window defogger switch OFF	5V
11	G/B	Ignition switch (ACC or ON)	Input	ACC or ON	Ignition switch ACC or ON	Battery voltage
12	LG	Front door switch RH	Input	OFF	ON (open)	0V
					OFF (closed)	Battery voltage

Terminal	Wire color	Signal name	Signal input/ output	Measuring condition		Reference value or waveform (Approx.)
				Ignition switch	Operation or condition	
13	L	Rear door switch RH	Input	OFF	ON (open)	0V
					OFF (closed)	Battery voltage
15	W	Tire pressure warning check connector	Input	OFF	—	5V
18	BR	Remote keyless entry receiver and optical sensor (ground)	Output	OFF	—	0V
19	V	Remote keyless entry receiver (power supply)	Output	OFF	Ignition switch OFF	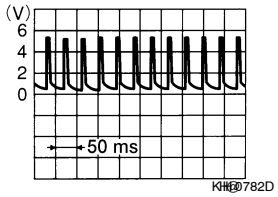
20	G	Remote keyless entry receiver (signal)	Input	OFF	Stand-by (keyfob buttons released)	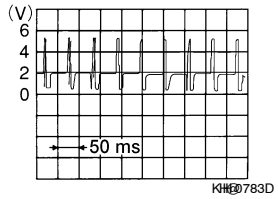
					When remote keyless entry receiver receives signal from keyfob (keyfob buttons pressed)	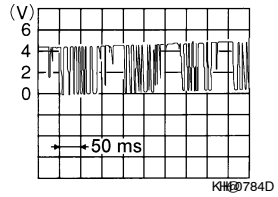
21	GR	NATS antenna amp.	Input	OFF → ON	Ignition switch (OFF → ON)	Just after turning ignition switch ON: Pointer of tester should move for approx. 1 second, then return to battery voltage.
23	G	Security indicator lamp	Output	OFF	Goes OFF → illuminates (Every 2.4 seconds)	Battery voltage → 0V
25	BR	NATS antenna amp.	Input	OFF → ON	Ignition switch (OFF → ON)	Just after turning ignition switch ON: Pointer of tester should move for approx. 1 second, then return to battery voltage.
27	W	Compressor ON signal	Input	ON	A/C switch OFF	5V
					A/C switch ON	0V
28	R	Front blower monitor	Input	ON	Front blower motor OFF	Battery voltage
					Front blower motor ON	0V
29	G	Hazard switch	Input	OFF	ON	0V
					OFF	5V
31	R	Off-road lamps switch	Input	ON	ON	0V
					OFF	5V

Terminal	Wire color	Signal name	Signal input/ output	Measuring condition		Reference value or waveform (Approx.)
				Ignition switch	Operation or condition	
32	O	Combination switch output 5	Output	ON	Lighting, turn, wiper OFF Wiper dial position 4	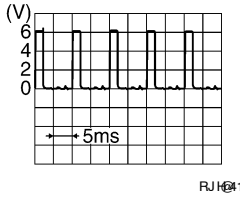 RJIA4180D
33	GR	Combination switch output 4	Output	ON	Lighting, turn, wiper OFF Wiper dial position 4	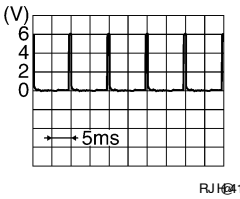 RJIA4181D
34	G	Combination switch output 3	Output	ON	Lighting, turn, wiper OFF Wiper dial position 4	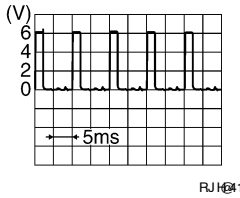 RJIA4180D
35	BR	Combination switch output 2	Output	ON	Lighting, turn, wiper OFF Wiper dial position 4	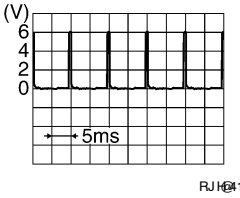 RJIA4181D
36	LG	Combination switch output 1				
37	B	Key switch and key lock solenoid	Input	OFF	Key inserted	Battery voltage
					Key inserted	0V
38	W/R	Ignition switch (ON)	Input	ON	—	Battery voltage
39	L	CAN-H	—	—	—	—
40	P	CAN-L	—	—	—	—
42	L	Off-road lamps	Output	ON	Off-road lamps switch: ON	0V
					Off-road lamps switch: OFF	Battery voltage
43	Y	Back door switch	Input	OFF	ON (open)	0V
					OFF (closed)	Battery voltage
44	O	Rear wiper auto stop switch	Input	ON	Rise up position (rear wiper arm on stopper)	0V
					A Position (full clockwise stop position)	Battery voltage
					Forward sweep (counterclockwise direction)	Fluctuating
					B Position (full counterclockwise stop position)	0V
					Reverse sweep (clockwise direction)	Fluctuating

Terminal	Wire color	Signal name	Signal input/ output	Measuring condition		Reference value or waveform (Approx.)
				Ignition switch	Operation or condition	
45	V	Lock switch	Input	OFF	ON (lock)	0V
					OFF	Battery voltage
46	LG	Unlock switch	Input	OFF	ON (unlock)	0V
					OFF	Battery voltage
47	GR	Front door switch LH	Input	OFF	ON (open)	0V
					OFF (closed)	Battery voltage
48	P	Rear door switch LH	Input	OFF	ON (open)	0V
					OFF (closed)	Battery voltage
49	L	Cargo lamp	Output	OFF	Any door open (ON)	0V
					All doors closed (OFF)	Battery voltage
50	W	Off-road lamps relay	Output	ON	Off-road lamps switch: ON	0V
					Off-road lamps switch: OFF	Battery voltage
51	G	Trailer turn signal (right)	Output	ON	Turn right ON	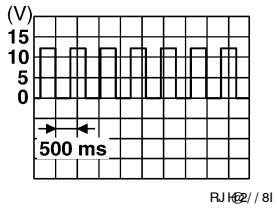
52	V	Trailer turn signal (left)	Output	ON	Turn left ON	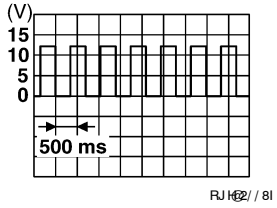
55	W	Rear wiper output circuit 1	Output	ON	OFF	0
					ON	Battery voltage
56	V	Battery saver output	Output	OFF	30 minutes after ignition switch is turned OFF	0V
				ON	—	Battery voltage
57	R/Y	Battery power supply	Input	OFF	—	Battery voltage
59	GR	Front door lock assembly LH actuator (unlock)	Output	OFF	OFF (neutral)	0V
					ON (unlock)	Battery voltage
60	LG	Turn signal (left)	Output	ON	Turn left ON	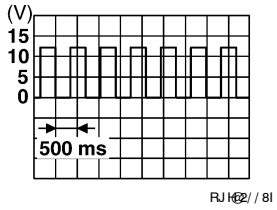

Terminal	Wire color	Signal name	Signal input/ output	Measuring condition			Reference value or waveform (Approx.)
				Ignition switch	Operation or condition		
61	G	Turn signal (right)	Output	ON	Turn right ON		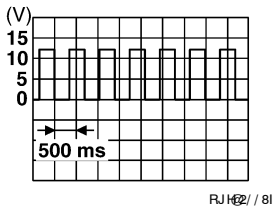
63	BR	Interior room/map lamp	Output	OFF	Any door switch	ON (open)	0V
						OFF (closed)	Battery voltage
65	V	All door lock actuators (lock)	Output	OFF	OFF (neutral)		0V
					ON (lock)		Battery voltage
66	L	Front door lock actuator RH, rear door lock actuators LH/RH and back door lock actuator (unlock)	Output	OFF	OFF (neutral)		0V
					ON (unlock)		Battery voltage
67	B	Ground	Input	ON	—		0V
68	O	Power window power supply (RAP)	Output	—	Ignition switch ON		Battery voltage
					Within 45 seconds after ignition switch OFF		Battery voltage
					More than 45 seconds after ignition switch OFF		0V
					When front door LH or RH is open or power window timer operates		0V
70	W	Battery power supply	Input	OFF	—		Battery voltage

Wiring Diagram

INFOID:0000000004469759

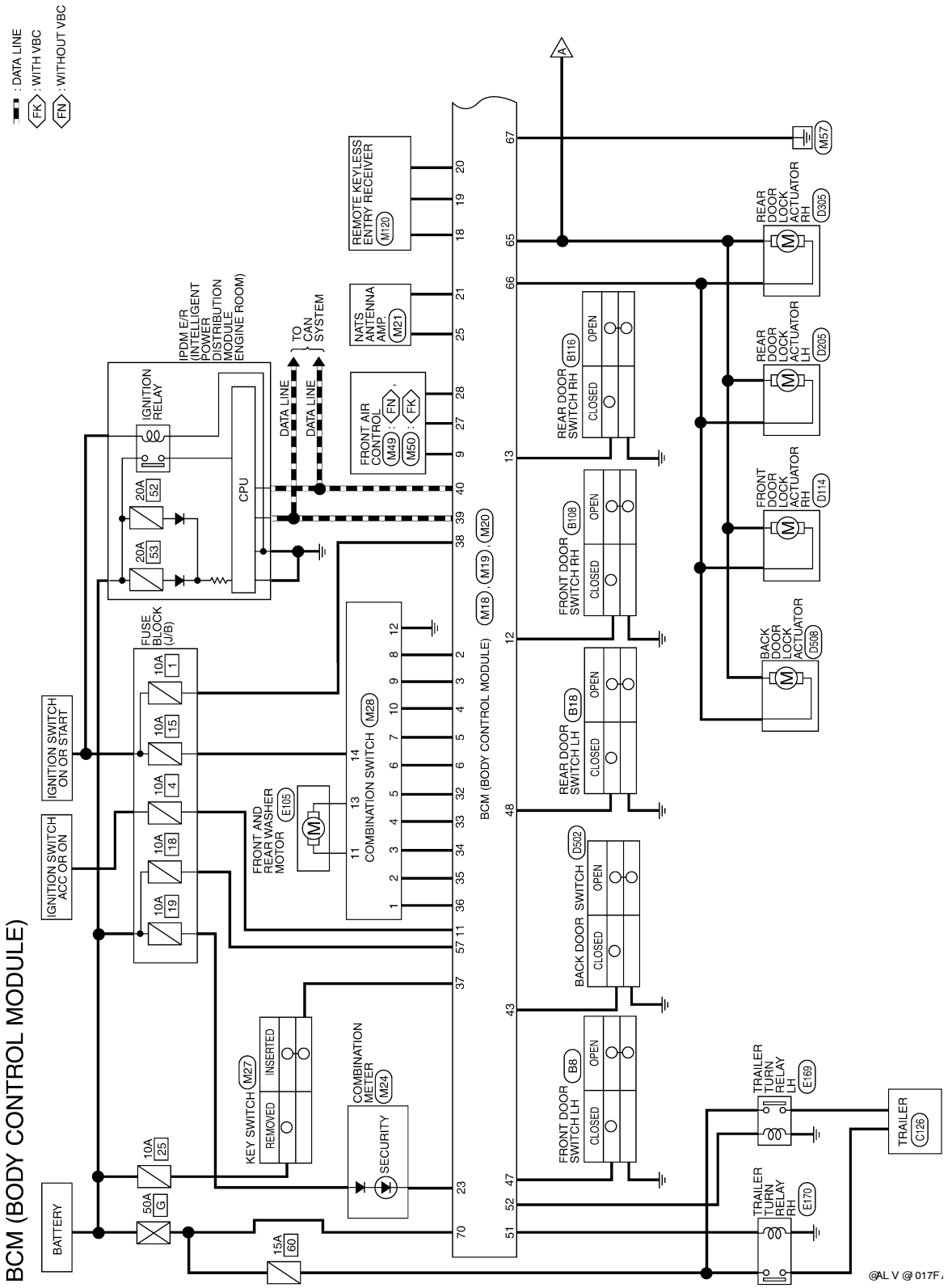

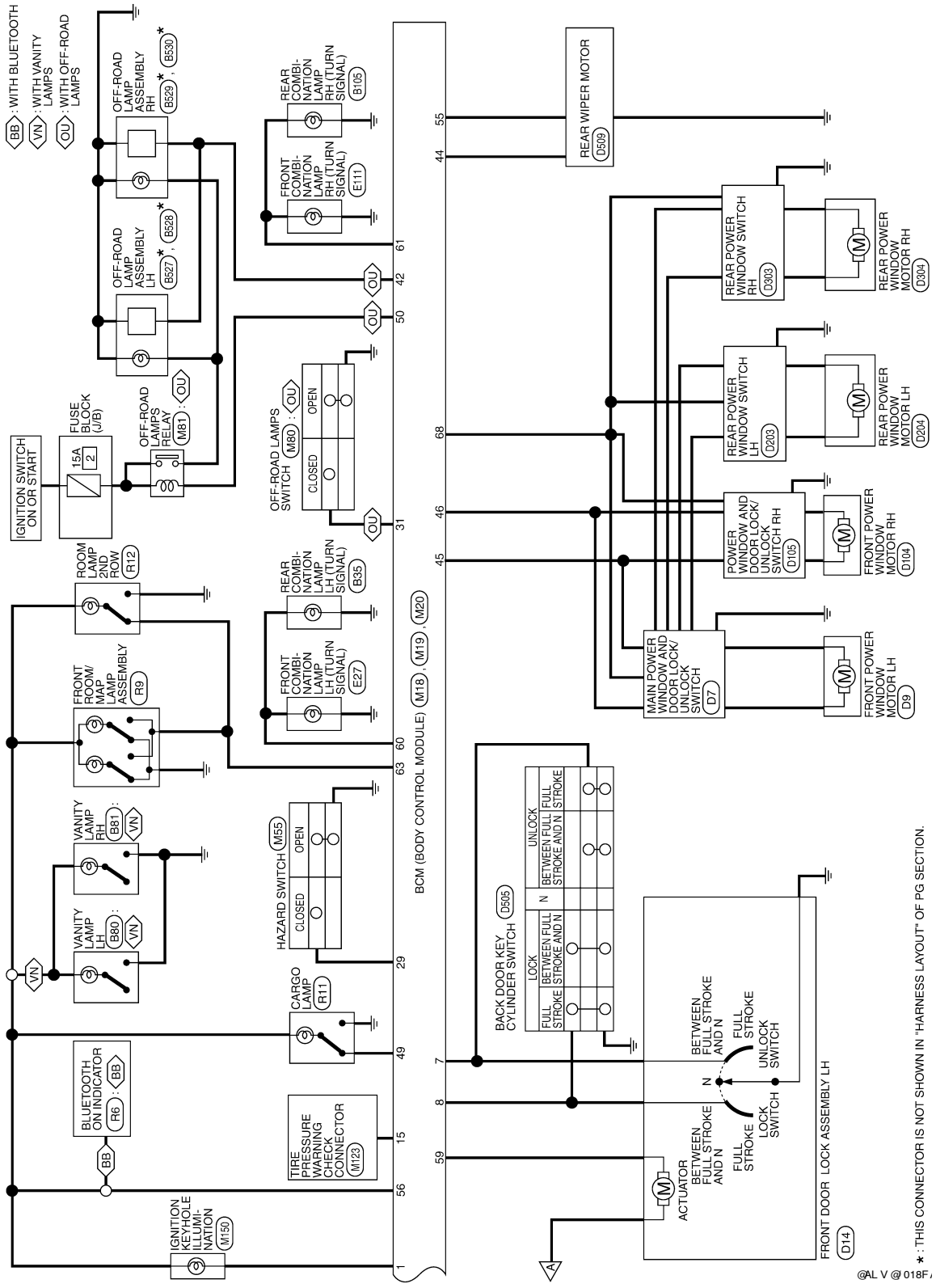
BB : WITH BLUETOOTH
VN : WITH VANITY LAMPS
OU : WITH OFF-ROAD LAMPS
OFF-ROAD LAMP ASSEMBLY RH * (B530, B529)
OFF-ROAD LAMP ASSEMBLY LH * (B528, B527)
REAR COMBINATION LAMP RH (TURN SIGNAL) (B105)
FRONT COMBINATION LAMP RH (TURN SIGNAL) (E111)
REAR WIPER MOTOR (D509)
REAR POWER WINDOW SWITCH RH (D303)
REAR POWER WINDOW MOTOR RH (D304)
REAR POWER WINDOW SWITCH LH (D203)
REAR POWER WINDOW MOTOR LH (D204)
POWER WINDOW AND DOOR LOCK/ UNLOCK SWITCH RH (D105)
FRONT POWER WINDOW MOTOR RH (D104)
MAIN POWER WINDOW AND DOOR LOCK/ UNLOCK SWITCH (D7)
FRONT POWER WINDOW MOTOR LH (D9)
FUSE BLOCK (J/B)
15A 2
IGNITION SWITCH ON OR START
OFF-ROAD LAMPS RELAY (M81) : OU
OFF-ROAD LAMPS SWITCH (M80) : OU
CLOSED
OPEN
ROOM LAMP 2ND ROW (R12)
FRONT ROOM/ MAP LAMP ASSEMBLY (R9)
REAR COMBINATION LAMP LH (TURN SIGNAL) (B35)
FRONT COMBINATION LAMP LH (TURN SIGNAL) (E27)
VANITY LAMP RH (B81) : VN
VANITY LAMP LH (B80) : VN
HAZARD SWITCH (M55)
CARGO LAMP (R11)
BLUETOOTH ON INDICATOR (R6) : BB
TIRE PRESSURE WARNING CHECK CONNECTOR (M123)
IGNITION KEYHOLE ILLUMINATION (M150)
BCM (BODY CONTROL MODULE) (M18), (M19), (M20)
1 56 15 49 29 63 60 31 50 42 61 55 44 45 46 68 7 8 59
BACK DOOR KEY CYLINDER SWITCH (D505)
LOCK
UNLOCK
FULL STROKE
BETWEEN FULL STROKE AND N
N
ACTUATOR
BETWEEN FULL STROKE AND N
FULL STROKE
LOCK SWITCH
UNLOCK SWITCH
FRONT DOOR LOCK ASSEMBLY LH (D14)
A
* : THIS CONNECTOR IS NOT SHOWN IN "HARNESS LAYOUT" OF PG SECTION.
@AL V @ 018F

BCM (BODY CONTROL MODULE) CONNECTORS

Connector No.	M18
Connector Name	BCM (BODY CONTROL MODULE)
Connector Color	WHITE

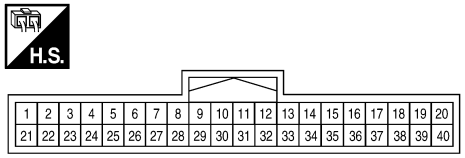

Terminal No.	Color of Wire	Signal Name
1	BR	KEY RING OUTPUT
2	P	INPUT 5
3	SB	INPUT 4
4	V	INPUT 3
5	L	INPUT 2
6	R	INPUT 1
7	GR	KEY CYLINDER UNLOCK SW
8	SB	KEY CYLINDER LOCK SW
9	Y	DEFOGGER SW
10	–	–
11	G/B	ACC_SW
12	LG	DOOR SW (AS)
13	L	DOOR SW (RR)
14	–	–
15	W	TPMS MODE TRIGGER SW
16	–	–
17	–	–
18	BR	KEYLESS & AUTO LIGHT SENSOR GND
19	V	KEYLESS TUNER POWER SUPPLY OUTPUT
20	G	KEYLESS TUNER SIGNAL
21	GR	IMMOBILIZER ANTENNA SIGNAL (CLOCK)
22	–	–
23	G	SECURITY INDICATOR OUTPUT
24	–	–
25	BR	IMMOBILIZER ANTENNA SIG (RX,TX)
26	–	–
27	W	AIRCON SW
28	R	BLOWER FAN SW
29	G	HAZARD SW
30	–	–
31	R	OFF ROAD LAMP SW
32	O	OUTPUT 5
33	GR	OUTPUT 4
34	G	OUTPUT 3
35	BR	OUTPUT 2
36	LG	OUTPUT 1
37	B	KEY SW
38	W/R	IGN SW
39	L	CAN-H
40	P	CAN-L

@ALH@252FA

Connector No.	M28
Connector Name	COMBINATION SWITCH
Connector Color	WHITE

H.S.

12	13		10		9	8	7
14	11		1	2	3	4	5	6

Terminal No.	Color of Wire	Signal Name
1	LG	INPUT 1
2	BR	INPUT 2
3	G	INPUT 3
4	GR	INPUT 4
5	O	INPUT 5
6	R	OUTPUT 1
7	L	OUTPUT 2
8	P	OUTPUT 5
9	SB	OUTPUT 4
10	V	OUTPUT 3
11	O	WASH FR (-) RR (+)
12	B	GND
13	L	WASH FR (+) RR (-)
14	W	IGN

Connector No.	M20
Connector Name	BCM (BODY CONTROL MODULE)
Connector Color	BLACK

H.S.

56	57	58	59	60	61	62	63	64
65	66	67	68	69	70			

Terminal No.	Color of Wire	Signal Name
56	V	BATTERY SAVER OUTPUT
57	R/Y	BAT (FUSE)
58	–	–
59	GR	DOOR UNLOCK OUTPUT (DR)
60	LG	FLASHER OUTPUT (LEFT)
61	G	FLASHER OUTPUT (RIGHT)
62	–	–
63	BR	ROOM LAMP OUTPUT
64	–	–
65	V	DOOR LOCK OUTPUT (ALL)
66	L	DOOR UNLOCK OUTPUT (OTHER)
67	B	GND (POWER)
68	O	POWER WINDOW POWER SUPPLY OUT (LINKED TO RAP)
69	–	–
70	W	BAT (F/L)

Connector No.	M19
Connector Name	BCM (BODY CONTROL MODULE)
Connector Color	WHITE

H.S.

41	42	43	44	45	46	47	48	49
50	51	52	53	54	55			

Terminal No.	Color of Wire	Signal Name
41	–	–
42	L	PCA OUTPUT
43	Y	BACK DOOR SW
44	O	REAR WIPER AUTO STOP SW1
45	V	CDL LOCK SW
46	LG	CDL UNLOCK SW
47	GR	DOOR SW (DR)
48	P	DOOR SW (RL)
49	L	CARGO LAMP OUTPUT
50	W	OFF ROAD LAMP OUTPUT
51	G	TRAILER FLASHER OUTPUT (RIGHT)
52	V	TRAILER FLASHER OUTPUT (LEFT)
53	–	–
54	–	–
55	W	REAR WIPER MOTOR OUTPUT 1

@AL H@ 253F A

Fail Safe

INFOID:0000000004469760

Fail-safe index

BCM performs fail-safe control when any DTC listed below is detected.

Display contents of CONSULT	Fail-safe	Cancellation
U1000: CAN COMM CIRCUIT	Inhibit engine cranking	When the BCM re-establishes communication with the other modules.
U1010: CONTROL UNIT (CAN)	Inhibit engine cranking	When the BCM re-start communicating with the other modules.

DTC Inspection Priority Chart

INFOID:0000000004469761

If some DTCs are displayed at the same time, perform inspections one by one based on the following priority chart.

Priority	DTC
1	• U1000: CAN COMM CIRCUIT • U1010: CONTROL UNIT (CAN)
2	• B2190: NATS ANTENNA AMP • B2191: DIFFERENCE OF KEY • B2192: ID DISCORD BCM-ECM • B2193: CHAIN OF BCM-ECM
3	• C1729: VHCL SPEED SIG ERR • C1735: IGNITION SIGNAL
4	• C1704: LOW PRESSURE FL • C1705: LOW PRESSURE FR • C1706: LOW PRESSURE RR • C1707: LOW PRESSURE RL • C1708: [NO DATA] FL • C1709: [NO DATA] FR • C1710: [NO DATA] RR • C1711: [NO DATA] RL • C1712: [CHECKSUM ERR] FL • C1713: [CHECKSUM ERR] FR • C1714: [CHECKSUM ERR] RR • C1715: [CHECKSUM ERR] RL • C1716: [PRESSDATA ERR] FL • C1717: [PRESSDATA ERR] FR • C1718: [PRESSDATA ERR] RR • C1719: [PRESSDATA ERR] RL • C1720: [CODE ERR] FL • C1721: [CODE ERR] FR • C1722: [CODE ERR] RR • C1723: [CODE ERR] RL • C1724: [BATT VOLT LOW] FL • C1725: [BATT VOLT LOW] FR • C1726: [BATT VOLT LOW] RR • C1727: [BATT VOLT LOW] RL

DTC Index

INFOID:0000000004469762

NOTE:

Details of time display

- CRNT: Displays when there is a malfunction now or after returning to the normal condition until turning ignition switch OFF → ON again.
- 1 - 39: Displayed if any previous malfunction is present when current condition is normal. It increases like 1 → 2 → 3...38 → 39 after returning to the normal condition whenever ignition switch OFF → ON. The counter remains at 39 even if the number of cycles exceeds it. It is counted from 1 again when turning ignition switch OFF → ON after returning to the normal condition if the malfunction is detected again.

CONSULT display	Fail-safe	Tire pressure monitor warning lamp ON	Reference page
No DTC is detected. further testing may be required.	—	—	—
U1000: CAN COMM CIRCUIT	—	—	BCS-31
U1010: CONTROL UNIT (CAN)	—	—	BCS-32
B2190: NATS ANTENNA AMP	—	—	SEC-18
B2191: DIFFERENCE OF KEY	—	—	SEC-21
B2192: ID DISCORD BCM-ECM	—	—	SEC-22
B2193: CHAIN OF BCM-ECM	—	—	SEC-24
C1708: [NO DATA] FL	—	—	WT-14
C1709: [NO DATA] FR	—	—	WT-14
C1710: [NO DATA] RR	—	—	WT-14
C1711: [NO DATA] RL	—	—	WT-14
C1712: [CHECKSUM ERR] FL	—	—	WT-16
C1713: [CHECKSUM ERR] FR	—	—	WT-16
C1714: [CHECKSUM ERR] RR	—	—	WT-16
C1715: [CHECKSUM ERR] RL	—	—	WT-16
C1716: [PRESSDATA ERR] FL	—	—	WT-18
C1717: [PRESSDATA ERR] FR	—	—	WT-18
C1718: [PRESSDATA ERR] RR	—	—	WT-18
C1719: [PRESSDATA ERR] RL	—	—	WT-18
C1720: [CODE ERR] FL	—	—	WT-16
C1721: [CODE ERR] FR	—	—	WT-16
C1722: [CODE ERR] RR	—	—	WT-16
C1723: [CODE ERR] RL	—	—	WT-16
C1724: [BATT VOLT LOW] FL	—	—	WT-16
C1725: [BATT VOLT LOW] FR	—	—	WT-16
C1726: [BATT VOLT LOW] RR	—	—	WT-16
C1727: [BATT VOLT LOW] RL	—	—	WT-16
C1729: VHCL SPEED SIG ERR	—	—	WT-19
C1735: IGNITION SIGNAL	—	—	—

IPDM E/R (INTELLIGENT POWER DISTRIBUTION MODULE ENGINE ROOM)

Reference Value

INFOID:0000000004469763

VALUES ON THE DIAGNOSIS TOOL

Monitor Item	Condition		Value/Status
MOTOR FAN REQ	Engine idle speed	Changes depending on engine coolant temperature, air conditioner operation status, vehicle speed, etc.	0 - 100 %
A/C COMP REQ	A/C switch OFF		OFF
	A/C switch ON		ON
TAIL&CLR REQ	Lighting switch OFF		OFF
	Lighting switch 1ST, 2ND, HI or AUTO (Light is illuminated)		ON
HL LO REQ	Lighting switch OFF		OFF
	Lighting switch 2ND HI or AUTO (Light is illuminated)		ON
HL HI REQ	Lighting switch OFF		OFF
	Lighting switch HI		ON
FR FOG REQ	Lighting switch 2ND	Front fog lamp switch OFF	OFF
		Front fog lamp switch ON	ON
HL WASHER REQ	**NOTE:** This item is displayed, but cannot be monitored.		OFF
FR WIP REQ	Ignition switch ON	Front wiper switch OFF	STOP
		Front wiper switch INT	1LOW
		Front wiper switch LO	LOW
		Front wiper switch HI	HI
WIP AUTO STOP	Ignition switch ON	Front wiper stop position	STOP P
		Any position other than front wiper stop position	ACT P
WIP PROT	Ignition switch ON	Front wiper operates normally	OFF
		Front wiper stops at fail-safe operation	BLOCK
ST RLY REQ	Ignition switch OFF or ACC		OFF
	Ignition switch START		ON
IGN RLY	Ignition switch OFF or ACC		OFF
	Ignition switch ON		ON
RR DEF REQ	Rear defogger switch OFF		OFF
	Rear defogger switch ON		ON
OIL P SW	Ignition switch OFF, ACC or engine running		OPEN
	Ignition switch ON		CLOSE
DTRL REQ	**NOTE:** This item is displayed, but cannot be monitored.		OFF
HOOD SW	**NOTE:** This item is displayed, but cannot be monitored.		OFF

Monitor Item	Condition	Value/Status
THFT HRN REQ	Not operated	OFF
	• Panic alarm is activated • Horn is activated with VEHICLE SECURITY (THEFT WARNING) SYSTEM	ON
HORN CHIRP	Not operated	OFF
	Door locking with keyfob (horn chirp mode)	ON

Terminal Layout

INFOID:0000000004469764

TERMINAL LAYOUT

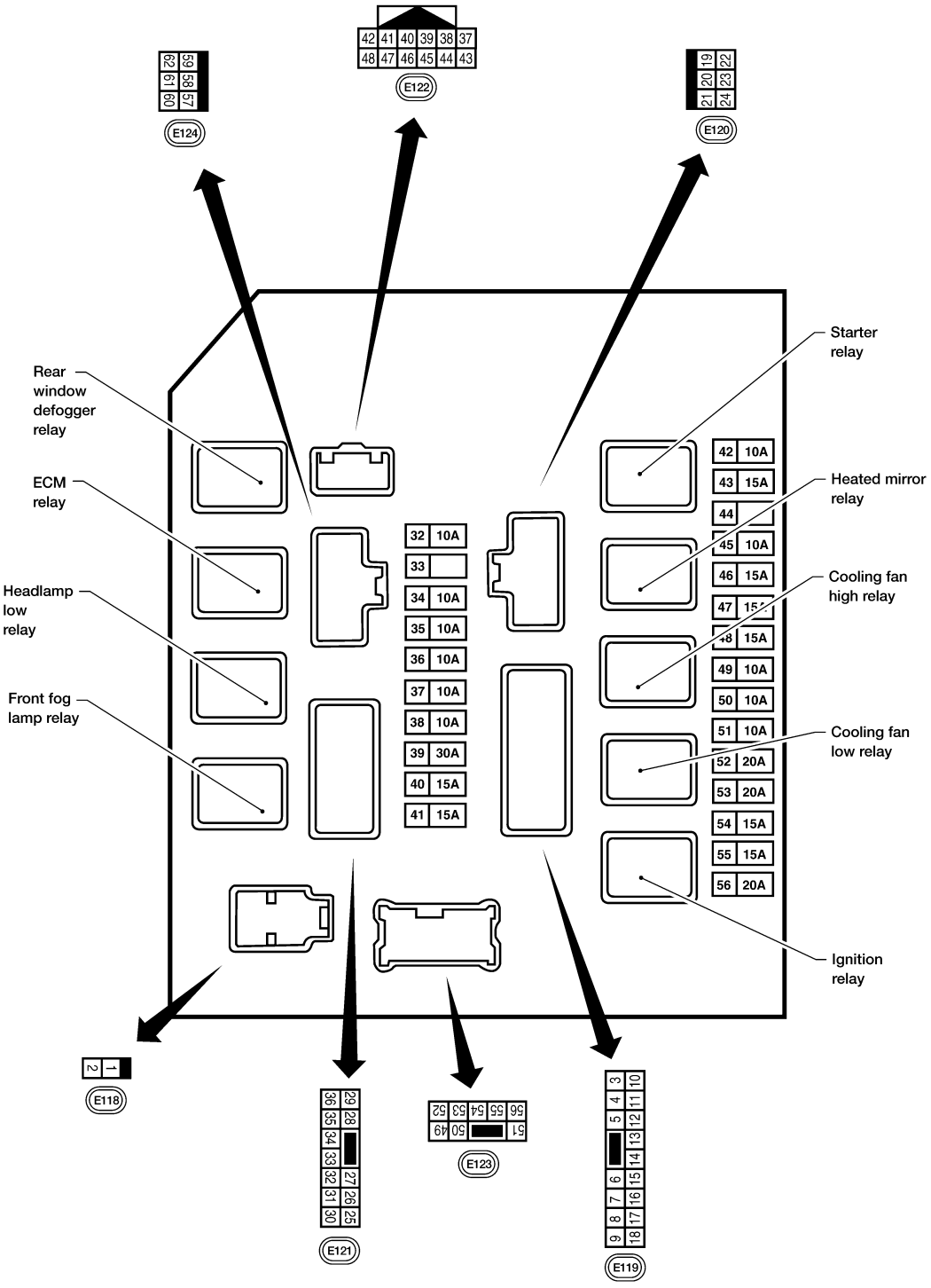

Physical Values

INFOID:0000000004469765

PHYSICAL VALUES

Terminal	Wire color	Signal name	Signal input/ output	Measuring condition		Reference value (Approx.)
				Ignition switch	Operation or condition	
1	W	Battery power supply	Input	OFF	—	Battery voltage
2	R	Battery power supply	Input	OFF	—	Battery voltage
3	G	ECM relay	Output	—	Ignition switch ON or START	Battery voltage
					Ignition switch OFF or ACC	0V
4	P	ECM relay	Output	—	Ignition switch ON or START	Battery voltage
					Ignition switch OFF or ACC	0V
6	V	Throttle control motor relay	Output	—	Ignition switch ON or START	Battery voltage
					Ignition switch OFF or ACC	0V
7	BR	ECM relay control	Input	—	Ignition switch ON or START	0V
					Ignition switch OFF or ACC	Battery voltage
8	W/R	Fuse 54	Output	—	Ignition switch ON or START	Battery voltage
					Ignition switch OFF or ACC	0V
10	R/B	Fuse 45	Output	ON	Daytime light system active	0V
					Daytime light system inactive	Battery voltage
11	Y	A/C compressor	Output	ON or START	A/C switch ON or defrost A/C switch	Battery voltage
					A/C switch OFF or defrost A/C switch	0V
12	W/G	Ignition switch supplied power	Input	—	OFF or ACC	0V
					ON or START	Battery voltage
13	R	Fuel pump relay	Output	—	Ignition switch ON or START	Battery voltage
					Ignition switch OFF or ACC	0V
14	W/G	Fuse 49	Output	—	Ignition switch ON or START	Battery voltage
					Ignition switch OFF or ACC	0V
15	W/R	Fuse 50 (ABS)	Output	—	Ignition switch ON or START	Battery voltage
					Ignition switch OFF or ACC	0V
16	W/G	Fuse 51	Output	—	Ignition switch ON or START	Battery voltage
					Ignition switch OFF or ACC	0V
17	W/G	Fuse 55	Output	—	Ignition switch ON or START	Battery voltage
					Ignition switch OFF or ACC	0V
19	W	Starter motor	Output	START	—	Battery voltage
20	BR	Cooling fan motor (low)	Output	ON or START	—	Battery voltage
21	GR	Ignition switch supplied power	Input	—	OFF or ACC	0V
					START	Battery voltage
22	G	Battery power supply	Output	OFF	—	Battery voltage
23	LG	Door mirror defogger output signal	Output	—	When rear defogger switch is ON	Battery voltage
					When raker defogger switch is OFF	0V

Terminal	Wire color	Signal name	Signal input/ output	Measuring condition			Reference value (Approx.)
				Ignition switch	Operation or condition		
24	P	Cooling fan motor (high)	Output	—	Conditions correct for cooling fan operation		Battery voltage
					Conditions not correct for cooling fan operation		0V
27	W	Fuse 38	Output	—	Ignition switch ON or START		Battery voltage
					Ignition switch OFF or ACC		0V
28	R	LH front parking and front side marker lamp	Output	OFF	Lighting switch 1st position	OFF	0V
						ON	Battery voltage
29	G	Trailer tow relay	Output	ON	Lighting switch 1st position	OFF	0V
						ON	Battery voltage
30	R/B	Fuse 53	Output	—	Ignition switch ON or START		Battery voltage
					Ignition switch OFF or ACC		0V
32	GR	Wiper low speed signal	Output	ON or START	Wiper switch	OFF	Battery voltage
						LO or INT	0V
35	L	Wiper high speed signal	Output	ON or START	Wiper switch	OFF, LO, INT	Battery voltage
						HI	0V
37	Y	Power generation command signal	Output	—	Ignition switch ON		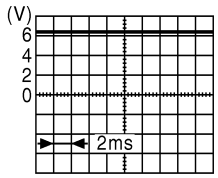 IOLH@//0FA 6.3 V
					40% is set on "Active test," "ALTERNATOR DUTY" of "ENGINE"		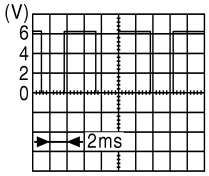 IOLH@//1FA 3.8 V
					40% is set on "Active test," "ALTERNATOR DUTY" of "ENGINE"		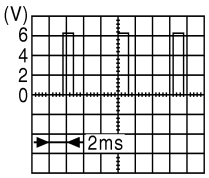 IOLH@//2FA 1.4 V
38	B	Ground	Input	—	—		0V
39	L	CAN-H	—	ON	—		—
40	P	CAN-L	—	ON	—		—
42	GR	Oil pressure switch	Input	—	Engine running		Battery voltage
					Engine stopped		0V

Terminal	Wire color	Signal name	Signal input/ output	Measuring condition			Reference value (Approx.)
				Ignition switch	Operation or condition		
43	G	Wiper auto stop signal	Input	ON or START	Wiper switch	OFF, LO, INT	Battery voltage
44	R	Daytime light relay control (Canada only)	Input	ON	Daytime light system active		0V
					Daytime light system inactive		Battery voltage
45	LG	Horn relay control	Input	ON	When door locks are operated using keyfob (OFF → ON)*		Battery voltage → 0V
46	V	Fuel pump relay control	Input	—	Ignition switch ON or START		0V
					Ignition switch OFF or ACC		Battery voltage
47	O	Throttle control motor relay control	Input	—	Ignition switch ON or START		0V
					Ignition switch OFF or ACC		Battery voltage
48	R	Starter relay (inhibit switch)	Input	ON or START	Selector lever in "P" or "N"		0V
					Selector lever any other position		Battery voltage
49	GR	Front RH parking and front side marker lamp	Output	OFF	Lighting switch 1st position	OFF	0V
						ON	Battery voltage
50	W	Front fog lamp (LH)	Output	ON or START	Lighting switch must be in the 2nd position (LOW beam is ON) and the front fog lamp switch	OFF	0V
						ON	Battery voltage
51	V	Front fog lamp (RH)	Output	ON or START	Lighting switch must be in the 2nd position (LOW beam is ON) and the front fog lamp switch	OFF	0V
						ON	Battery voltage
52	P	LH low beam headlamp	Output	—	Lighting switch in 2nd position		Battery voltage
54	R	RH low beam headlamp	Output	—	Lighting switch in 2nd position		Battery voltage
55	G	LH high beam headlamp	Output	—	Lighting switch in 2nd position and placed in HIGH or PASS position		Battery voltage
56	L	RH high beam headlamp	Output	—	Lighting switch in 2nd position and placed in HIGH or PASS position		Battery voltage
57	GR	Parking, license and tail lamps and off-road lamp switch	Output	ON	Lighting switch 1st position	OFF	0V
						ON	Battery voltage
59	B	Ground	Input	—	—		0V
60	GR	Rear window defogger relay	Output	ON or START	Rear defogger switch ON		Battery voltage
					Rear defogger switch OFF		0V
61	R/B	Fuse 32	Output	OFF	—		Battery voltage

*: When horn reminder is ON

Wiring Diagram

INFOID:0000000004469766

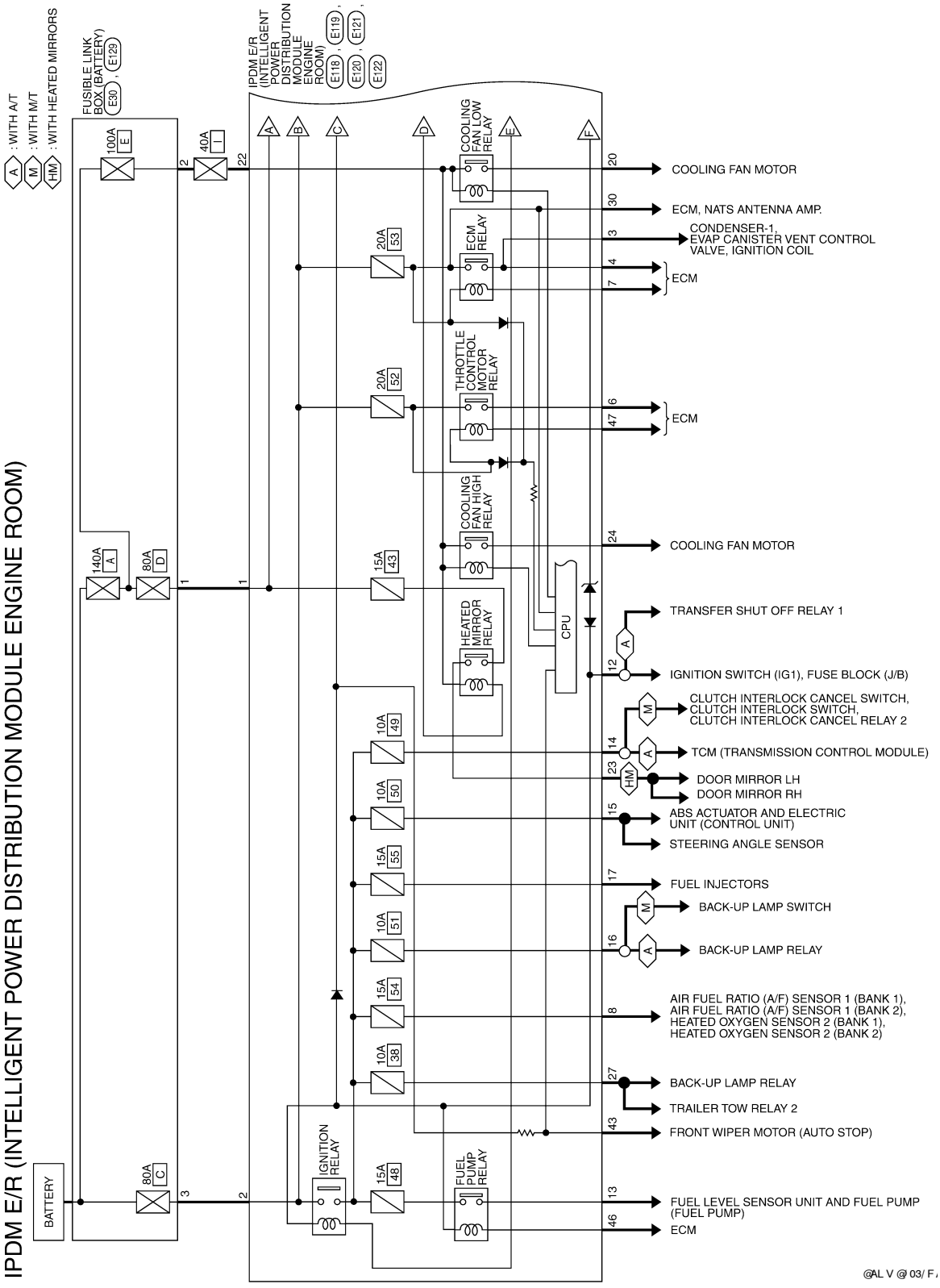

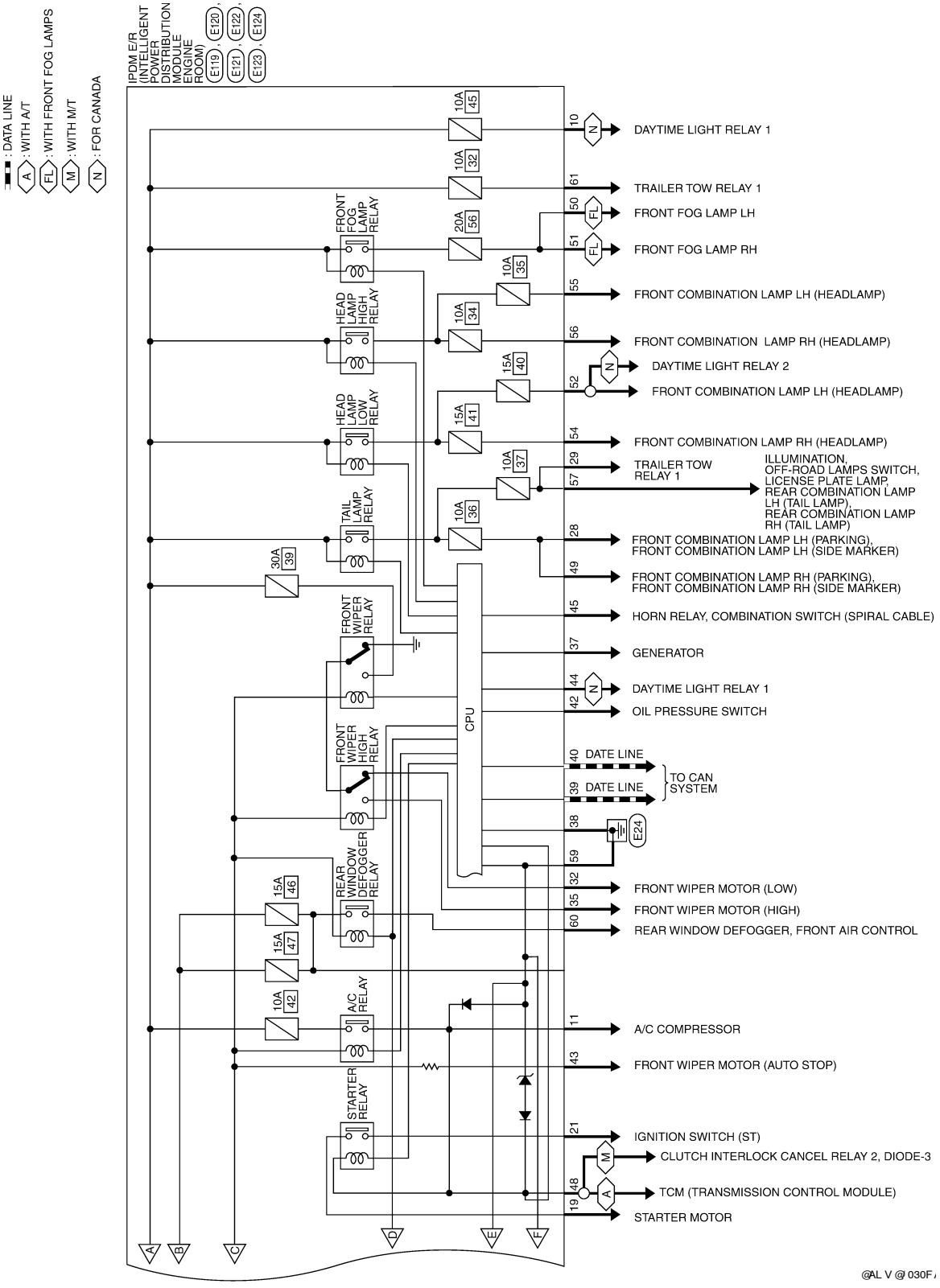
: DATA LINE
A : WITH A/T
FL : WITH FRONT FOG LAMPS
M : WITH M/T
N : FOR CANADA
IPDM E/R (INTELLIGENT POWER DISTRIBUTION MODULE ENGINE ROOM)
E120, E122, E124
E119, E121, E123
10A 45
10A 32
FRONT FOG LAMP RELAY
20A 56
10A 35
HEAD LAMP HIGH RELAY
10A 34
15A 40
HEAD LAMP LOW RELAY
15A 41
10A 37
TAIL LAMP RELAY
10A 36
30A 39
FRONT WIPER RELAY
FRONT WIPER HIGH RELAY
REAR WINDOW DEFOGGER RELAY
15A 46
15A 47
10A 42
A/C RELAY
STARTER RELAY
CPU
10 DAYTIME LIGHT RELAY 1
61 TRAILER TOW RELAY 1
50 FRONT FOG LAMP LH
51 FRONT FOG LAMP RH
55 FRONT COMBINATION LAMP LH (HEADLAMP)
56 FRONT COMBINATION LAMP RH (HEADLAMP)
52 DAYTIME LIGHT RELAY 2
FRONT COMBINATION LAMP LH (HEADLAMP)
54 FRONT COMBINATION LAMP RH (HEADLAMP)
29 TRAILER TOW RELAY 1
57 ILLUMINATION, OFF-ROAD LAMPS SWITCH, LICENSE PLATE LAMP, REAR COMBINATION LAMP LH (TAIL LAMP), REAR COMBINATION LAMP RH (TAIL LAMP)
28 FRONT COMBINATION LAMP LH (PARKING), FRONT COMBINATION LAMP LH (SIDE MARKER)
49 FRONT COMBINATION LAMP RH (PARKING), FRONT COMBINATION LAMP RH (SIDE MARKER)
45 HORN RELAY, COMBINATION SWITCH (SPIRAL CABLE)
37 GENERATOR
44 DAYTIME LIGHT RELAY 1
42 OIL PRESSURE SWITCH
40 DATE LINE
39 DATE LINE
TO CAN SYSTEM
38 E24
59
32 FRONT WIPER MOTOR (LOW)
35 FRONT WIPER MOTOR (HIGH)
60 REAR WINDOW DEFOGGER, FRONT AIR CONTROL
11 A/C COMPRESSOR
43 FRONT WIPER MOTOR (AUTO STOP)
21 IGNITION SWITCH (ST)
CLUTCH INTERLOCK CANCEL RELAY 2, DIODE-3
48 TCM (TRANSMISSION CONTROL MODULE)
19 STARTER MOTOR
A B C D E F
@AL V @ 030F

IPDM E/R (INTELLIGENT POWER DISTRIBUTION MODULE ENGINE ROOM) CONNECTORS

Connector No.	E30
Connector Name	FUSIBLE LINK BOX (BATTERY)
Connector Color	–

Terminal No.	Color of Wire	Signal Name
3	R	–

Connector No.	E118
Connector Name	IPDM E/R (INTELLIGENT POWER DISTRIBUTION MODULE ENGINE ROOM)
Connector Color	BLACK

Terminal No.	Color of Wire	Signal Name
1	W	F/L USM
2	R	F/L MAIN

Connector No.	E119
Connector Name	IPDM E/R (INTELLIGENT POWER DISTRIBUTION MODULE ENGINE ROOM)
Connector Color	WHITE

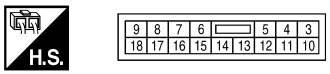

Terminal No.	Color of Wire	Signal Name
3	G	IGN COIL
4	P	ECM
5	–	–
6	V	ETC
7	BR	ECM RLY CONT
8	W/R	O2 SENSOR
9	–	–
10	R/B	DTRL RLY SUPPLY
11	Y	A/C COMPRESSOR
12	W/G	IGN SW (IG1)
13	R	FUEL PUMP
14	W/G	A/T ECU IGN SUPPLY
15	W/R	ABS IGN SUPPLY
16	W/G	REVERSE LAMP
17	W/G	INJECTOR
18	–	–

Connector No.	E120
Connector Name	IPDM E/R (INTELLIGENT POWER DISTRIBUTION MODULE ENGINE ROOM)
Connector Color	WHITE

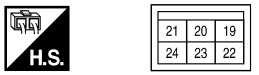

Terminal No.	Color of Wire	Signal Name
19	W	STARTER MTR
20	BR	MOTOR FAN 1
21	GR	IGN SW (ST)
22	G	F/L M/FAN
23	LG	HEATED MIRROR
24	P	MOTOR FAN 2

@AL H@ 282F A

Connector No.	E123
Connector Name	IPDM E/R (INTELLIGENT POWER DISTRIBUTION MODULE ENGINE ROOM)
Connector Color	BROWN

H.S.

51		50	49
56	55	54	53	52

Terminal No.	Color of Wire	Signal Name
49	GR	ILLUMINATION
50	W	FR FOG LAMP LH
51	V	FR FOG LAMP RH
52	P	H/LAMP LO LH
53	–	–
54	R	H/LAMP LO RH
55	G	H/LAMP HI LH
56	L	H/LAMP HI RH

Connector No.	E129
Connector Name	FUSIBLE LINK BOX (BATTERY)
Connector Color	BROWN

H.S.

2
1

Terminal No.	Color of Wire	Signal Name
1	W	–
2	R	–

Connector No.	E122
Connector Name	IPDM E/R (INTELLIGENT POWER DISTRIBUTION MODULE ENGINE ROOM)
Connector Color	WHITE

H.S.

42	41	40	39	38	37
48	47	46	45	44	43

Terminal No.	Color of Wire	Signal Name
37	Y	ALT-C CONT
38	B	GND (SIGNAL)
39	L	CAN-H
40	P	CAN-L
41	–	–
42	GR	OIL PRESSURE SW
43	G	AUTO STOP SW
44	R	DTRL RLY CONT
45	LG	ANT THEFT HORN
46	V	FUEL PUMP RLY CONT
47	O	ETC RLY CONT
48	R	INHIBIT SW

Terminal No.	Color of Wire	Signal Name
57	GR	TAIL LAMP
58	–	–
59	B	GND (POWER)
60	GR	RR DEF
61	R/B	TRAIL_RLY SUPPLY
62	–	–

Connector No.	E121
Connector Name	IPDM E/R (INTELLIGENT POWER DISTRIBUTION MODULE ENGINE ROOM)
Connector Color	BROWN

H.S.

29	28	27	26	25
36	35	34	33	32	31	30

Terminal No.	Color of Wire	Signal Name
25	–	–
26	–	–
27	W	T TOW REV LAMP
28	R	ILLUMINATION
29	G	TRAILER RLY CONT
30	R/B	ECM BATT
31	–	–
32	GR	FR WIPER LO
33	–	–
34	–	–
35	L	FR WIPER HI
36	–	–

Connector No.	E124
Connector Name	IPDM E/R (INTELLIGENT POWER DISTRIBUTION MODULE ENGINE ROOM)
Connector Color	BLACK

H.S.

59	58	57
62	61	60

@AL H@ 283F A

Fail Safe

INFOID:0000000004469767

CAN COMMUNICATION CONTROL

When CAN communication with ECM and BCM is impossible, IPDM E/R performs fail-safe control. After CAN communication recovers normally, it also returns to normal control.

If No CAN Communication Is Available With ECM

Control part	Fail-safe in operation
Cooling fan	• Turns ON the cooling fan relay when the ignition switch is turned ON • Turns OFF the cooling fan relay when the ignition switch is turned OFF

If No CAN Communication Is Available With BCM

Control part	Fail-safe in operation
Headlamp	• Turns ON the headlamp low relay when the ignition switch is turned ON • Turns OFF the headlamp low relay when the ignition switch is turned OFF • Headlamp (LH/RH) high relays OFF
• Parking lamps • License plate lamps • Tail lamps	• Turns ON the tail lamp relay when the ignition switch is turned ON • Turns OFF the tail lamp relay when the ignition switch is turned OFF
Front wiper	• The status just before activation of fail-safe control is maintained until the ignition switch is turned OFF while the front wiper is operating at LO or HI speed. • The wiper is operated at LO speed until the ignition switch is turned OFF if the fail-safe control is activated while the front wiper is set in the INT mode and the front wiper motor is operating.
Rear window defogger	Rear window defogger relay OFF
A/C compressor	A/C relay OFF
Front fog lamps (if equipped)	Front fog lamp relay OFF

IGNITION RELAY MALFUNCTION DETECTION FUNCTION

- IPDM E/R monitors the voltage at the contact circuit and excitation coil circuit of the ignition relay inside it.
- IPDM E/R judges the ignition relay error if the voltage differs between the contact circuit and the excitation coil circuit.
- If the ignition relay cannot turn OFF due to contact seizure, it activates the tail lamp relay for 10 minutes to alert the user to the ignition relay malfunction when the ignition switch is turned OFF.

Ignition switch	Ignition relay	Tail lamp relay
ON	ON	—
OFF	OFF	—

NOTE:

The tail lamp turns OFF when the ignition switch is turned ON.

FRONT WIPER CONTROL

IPDM E/R detects front wiper stop position by a front wiper auto stop signal.
When a front wiper auto stop signal is in the conditions listed below, IPDM E/R stops power supply to wiper after repeating a front wiper 10 second activation and 20 second stop five times.

Ignition switch	Front wiper switch	Auto stop signal
ON	OFF	Front wiper stop position signal cannot be input 10 seconds.
	ON	The signal does not change for 10 seconds.

NOTE:

This operation status can be confirmed on the IPDM E/R “DATA MONITOR” that displays “Block” for the item “WIP PROT” while the wiper is stopped.

STARTER MOTOR PROTECTION FUNCTION

IPDM E/R turns OFF the starter control relay to protect the starter motor when the starter control relay remains active for 90 seconds.

DTC Index

INFOID:0000000004469768

CONSULT-III display	Fail-safe	TIME[NOTE]		Refer to
No DTC is detected. further testing may be required.	—	—	—	—
U1000: CAN COMM CIRCUIT	×	CRNT	1 – 39	PCS-18

NOTE:
The details of TIME display are as follows.
- CRNT: The malfunctions that are detected now
- 1 - 39: The number is indicated when it is normal at present and a malfunction was detected in the past. It increases like 0 → 1 → 2 ··· 38 → 39 after returning to the normal condition whenever IGN OFF → ON. It is fixed to 39 until the self-diagnosis results are erased if it is over 39. It returns to 0 when a malfunction is detected again in the process.

SYMPTOM DIAGNOSIS

THE FUEL GAUGE POINTER DOES NOT MOVE

Description

INFOID:0000000004095325

Fuel gauge needle will not move from a certain position.

Diagnosis Procedure

INFOID:0000000004095326

1.CHECK COMBINATION METER INPUT SIGNAL

1. Select “METER/M&A” on CONSULT-III.
2. Using “FUEL METER” of “DATA MONITOR”, compare the monitor value with the fuel gauge reading on the combination meter. Refer to MWI-32, "Component Function Check".

Does monitor value match fuel gauge reading?

YES >> GO TO 2
NO >> Replace combination meter. Refer to MWI-90, "Removal and Installation".

2.CHECK FUEL LEVEL SENSOR SIGNAL CIRCUIT

Check the fuel level sensor signal circuit. Refer to MWI-32, "Diagnosis Procedure".

Is the inspection result normal?

YES >> GO TO 3
NO >> Repair harness or connector.

3.CHECK FUEL LEVEL SENSOR UNIT

Perform a unit check for the fuel level sensor unit. Refer to MWI-33, "Component Inspection".

Is the inspection result normal?

YES >> GO TO 4
NO >> Replace fuel level sensor unit. Refer to FL-11, "Removal and Installation".

4.CHECK FLOAT INTERFERENCE

Check that the float arm does not interfere or bind with any of the components in the fuel tank.

Is the inspection result normal?

YES >> Replace combination meter. Refer to MWI-90, "Removal and Installation".
NO >> Repair or replace malfunctioning parts.

THE FUEL GAUGE POINTER DOES NOT MOVE TO "F" WHEN REFUELING

Description

INFOID:0000000004095327

The fuel gauge needle will not move to “F” position when refueling.

Diagnosis Procedure

INFOID:0000000004095328

1.OBSERVE FUEL GAUGE

Does it take a long time for the pointer to move to FULL position?

YES or NO

YES >> GO TO 2
NO >> GO TO 3

2.IDENTIFY FUELING CONDITION

Was the vehicle fueled with the ignition switch ON?

YES or NO

YES >> Be sure to fuel the vehicle with the ignition switch OFF. Otherwise, it will take a long time to move to FULL position because of the characteristic of the fuel gauge.
NO >> GO TO 3

3.OBSERVE VEHICLE POSITION

Is the vehicle parked on an incline?

YES or NO

YES >> Check the fuel level indication with vehicle on a level surface.
NO >> GO TO 4

4.OBSERVE FUEL GAUGE POINTER

During driving, does the fuel gauge pointer move gradually toward EMPTY position?

YES or NO

YES >> Check the components. Refer to MWI-33, "Component Inspection".
NO >> The float arm may interfere or bind with any of the components in the fuel tank.

THE OIL PRESSURE WARNING LAMP DOES NOT TURN ON

Description

INFOID:0000000004095329

The oil pressure warning lamp stays off when the ignition switch is turned ON.

Diagnosis Procedure

INFOID:0000000004095330

1.CHECK OIL PRESSURE WARNING LAMP

Perform IPDM E/R auto active test. Refer to PCS-13, "Diagnosis Description".

Is oil pressure warning lamp illuminated?

YES >> GO TO 2
NO >> Replace combination meter. Refer to MWI-90, "Removal and Installation".

2.CHECK OIL PRESSURE SWITCH SIGNAL CIRCUIT

Check the oil pressure switch signal circuit. Refer to MWI-34, "Diagnosis Procedure".

Is the inspection result normal?

YES >> GO TO 3
NO >> Repair harness or connector.

3.CHECK OIL PRESSURE SWITCH UNIT

Perform a unit check for the oil pressure switch. Refer to MWI-34, "Component Inspection".

Is the inspection result normal?

YES >> Replace IPDM E/R. Refer to PCS-34, "Removal and Installation of IPDM E/R".
NO >> Replace oil pressure switch.

THE OIL PRESSURE WARNING LAMP DOES NOT TURN OFF

Description

INFOID:0000000004095331

The oil pressure warning lamp remains illuminated while the engine is running (normal oil pressure).

Diagnosis Procedure

INFOID:0000000004095332

1.CHECK OIL PRESSURE WARNING LAMP

Perform IPDM E/R auto active test. Refer to PCS-13, "Diagnosis Description".

Is oil pressure warning lamp illuminated?

YES >> GO TO 2
NO >> Replace combination meter. Refer to MWI-90, "Removal and Installation".

2.CHECK IPDM E/R OUTPUT VOLTAGE

1. Turn ignition switch OFF.
2. Disconnect the oil pressure switch connector.
3. Turn ignition switch ON.
4. Check voltage between the oil pressure switch harness connector E208 terminal 1 and ground.

1 – Ground : Approx. 12V

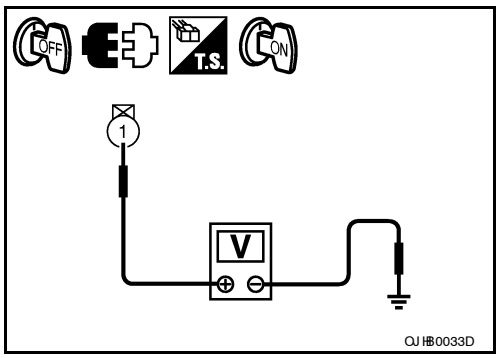

Is the inspection result normal?

YES >> GO TO 3
NO >> GO TO 4

3.CHECK OIL PRESSURE SWITCH

Perform a unit check for the oil pressure switch. Refer to MWI-34, "Component Inspection".

Is the inspection result normal?

YES >> Replace IPDM E/R. Refer to PCS-34, "Removal and Installation of IPDM E/R".
NO >> Replace oil pressure switch.

4.CHECK OIL PRESSURE SWITCH SIGNAL CIRCUIT

Check the oil pressure switch signal circuit. Refer to MWI-34, "Diagnosis Procedure".

Is the inspection result normal?

YES >> Replace IPDM E/R. Refer to PCS-34, "Removal and Installation of IPDM E/R".
NO >> Repair harness or connector.

NORMAL OPERATING CONDITION
COMPASS

COMPASS : Description

INFOID:0000000004095333

COMPASS

- The electronic compass is highly protected from changes in most magnetic fields. However, some large changes in magnetic fields can affect it. Some examples are (but not limited to): high tension power lines, large steel buildings, subways, steel bridges, automatic car washes, large piles of scrap metal, etc. While this does not happen very often, it is possible.
- During normal operation, the Compass Mirror will continuously update the compass calibration to adjust for gradual changes in the vehicle's magnetic "remnant" field. If the vehicle is subjected to high magnetic influences, the compass may appear to indicate false headings, become locked, or appear that it is unable to be calibrated. If this occurs, perform the calibration procedure.
- If at any time the compass continually displays the incorrect direction or the reading is erratic or locked, verify the correct zone variance.

Symptom Chart

Symptom	Cause	Solution / Reference
The compass display reads "C".	• Compass is not calibrated. • Incorrect zone variance setting. • Large change in magnetic field (Steel bridges, subways, concentrations of metal, car washes, etc.) • Compass was calibrated incorrectly or in the presence of a strong magnetic field.	Perform Calibration. Refer to MWI-21, "Description".
Compass shows the wrong direction.		
Compass does not change direction appears "Locked".		
Compass does not show all the directions, one or more is missing.		
The compass was calibrated but it "loses" calibration.		
On long trips the compass shows the wrong direction.		Perform Zone Variation Setting if correct reading is desired in that location. Refer to MWI-21, "Description".

PRECAUTION

PRECAUTIONS

Supplemental Restraint System (SRS) "AIR BAG" and "SEAT BELT PRE-TENSIONER"

INFOID:0000000004095334

The Supplemental Restraint System such as “AIR BAG” and “SEAT BELT PRE-TENSIONER”, used along with a front seat belt, helps to reduce the risk or severity of injury to the driver and front passenger for certain types of collision. This system includes seat belt switch inputs and dual stage front air bag modules. The SRS system uses the seat belt switches to determine the front air bag deployment, and may only deploy one front air bag, depending on the severity of a collision and whether the front occupants are belted or unbelted.
Information necessary to service the system safely is included in the SR and SB section of this Service Manual.

WARNING:

- **To avoid rendering the SRS inoperative, which could increase the risk of personal injury or death in the event of a collision which would result in air bag inflation, all maintenance must be performed by an authorized NISSAN/INFINITI dealer.**
- **Improper maintenance, including incorrect removal and installation of the SRS, can lead to personal injury caused by unintentional activation of the system. For removal of Spiral Cable and Air Bag Module, see the SR section.**
- **Do not use electrical test equipment on any circuit related to the SRS unless instructed to in this Service Manual. SRS wiring harnesses can be identified by yellow and/or orange harnesses or harness connectors.**

ON-VEHICLE REPAIR

COMBINATION METER

Removal and Installation

INFOID:0000000004095335

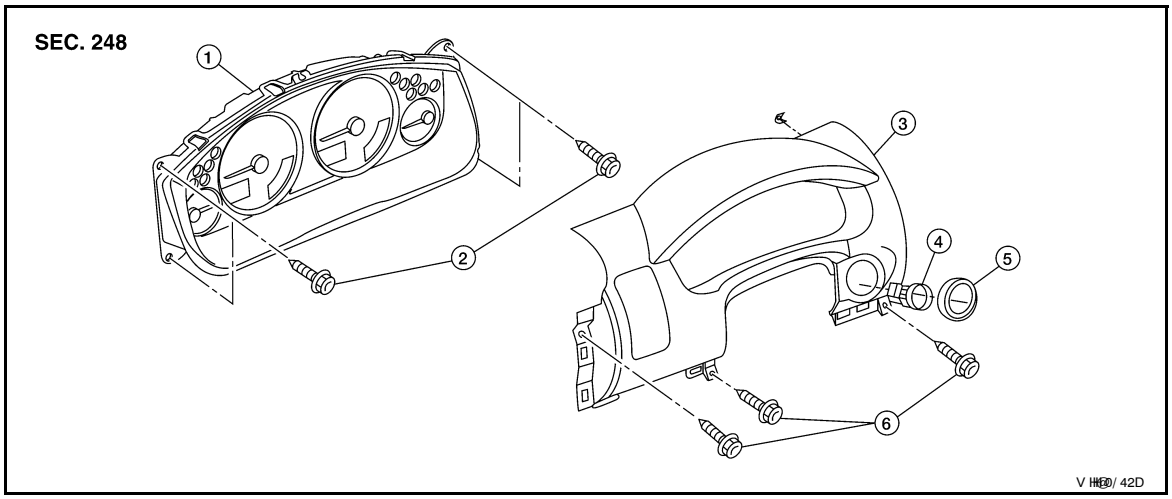

1. Combination meter
2. Combination meter screws
3. Cluster lid A
4. Ignition key lamp assembly (if equipped)
5. Steering lock escutcheon
6. Cluster lid A screws

REMOVAL

1. Disconnect the negative battery terminal.
2. Remove the cluster lid A. Refer to IP-11, "Removal and Installation".
3. Remove the combination meter screws, using power tool.
4. Pull out the combination meter and disconnect the combination meter electrical connector.

INSTALLATION

Installation is in the reverse order of removal.